Federal Register

4–26–05 Tuesday
Vol. 70 No. 79 Apr. 26, 2005

Pages 21325–21612

The **FEDERAL REGISTER** (ISSN 0097–6326) is published daily, Monday through Friday, except official holidays, by the Office of the Federal Register, National Archives and Records Administration, Washington, DC 20408, under the Federal Register Act (44 U.S.C. Ch. 15) and the regulations of the Administrative Committee of the Federal Register (1 CFR Ch. I). The Superintendent of Documents, U.S. Government Printing Office, Washington, DC 20402 is the exclusive distributor of the official edition. Periodicals postage is paid at Washington, DC.

The **FEDERAL REGISTER** provides a uniform system for making available to the public regulations and legal notices issued by Federal agencies. These include Presidential proclamations and Executive Orders, Federal agency documents having general applicability and legal effect, documents required to be published by act of Congress, and other Federal agency documents of public interest.

Documents are on file for public inspection in the Office of the Federal Register the day before they are published, unless the issuing agency requests earlier filing. For a list of documents currently on file for public inspection, see *www.archives.gov.*

The seal of the National Archives and Records Administration authenticates the Federal Register as the official serial publication established under the Federal Register Act. Under 44 U.S.C. 1507, the contents of the **Federal Register** shall be judicially noticed.

The **Federal Register** is published in paper and on 24x microfiche. It is also available online at no charge as one of the databases on GPO Access, a service of the U.S. Government Printing Office.

The online edition of the **Federal Register** *www.gpoaccess.gov/nara,* available through GPO Access, is issued under the authority of the Administrative Committee of the Federal Register as the official legal equivalent of the paper and microfiche editions (44 U.S.C. 4101 and 1 CFR 5.10). It is updated by 6 a.m. each day the **Federal Register** is published and includes both text and graphics from Volume 59, Number 1 (January 2, 1994) forward.

For more information about GPO Access, contact the GPO Access User Support Team, call toll free 1-888-293-6498; DC area 202-512-1530; fax at 202-512-1262; or via e-mail at *gpoaccess@gpo.gov.* The Support Team is available between 7:00 a.m. and 9:00 p.m. Eastern Time, Monday–Friday, except official holidays.

The annual subscription price for the **Federal Register** paper edition is $749 plus postage, or $808, plus postage, for a combined **Federal Register, Federal Register** Index and List of CFR Sections Affected (LSA) subscription; the microfiche edition of the **Federal Register** including the **Federal Register** Index and LSA is $165, plus postage. Six month subscriptions are available for one-half the annual rate. The prevailing postal rates will be applied to orders according to the delivery method requested. The price of a single copy of the daily **Federal Register,** including postage, is based on the number of pages: $11 for an issue containing less than 200 pages; $22 for an issue containing 200 to 400 pages; and $33 for an issue containing more than 400 pages. Single issues of the microfiche edition may be purchased for $3 per copy, including postage. Remit check or money order, made payable to the Superintendent of Documents, or charge to your GPO Deposit Account, VISA, MasterCard, American Express, or Discover. Mail to: New Orders, Superintendent of Documents, P.O. Box 371954, Pittsburgh, PA 15250-7954; or call toll free 1-866-512-1800, DC area 202-512-1800; or go to the U.S. Government Online Bookstore site, see *bookstore.gpo.gov.*

There are no restrictions on the republication of material appearing in the **Federal Register.**

How To Cite This Publication: Use the volume number and the page number. Example: 70 FR 12345.

Postmaster: Send address changes to the Superintendent of Documents, Federal Register, U.S. Government Printing Office, Washington DC 20402, along with the entire mailing label from the last issue received.

SUBSCRIPTIONS AND COPIES

PUBLIC

Subscriptions:

Paper or fiche	**202–512–1800**
Assistance with public subscriptions	**202–512–1806**

General online information **202–512–1530; 1–888–293–6498**

Single copies/back copies:

Paper or fiche	**202–512–1800**
Assistance with public single copies	**1–866–512–1800 (Toll-Free)**

FEDERAL AGENCIES

Subscriptions:

Paper or fiche	**202–741–6005**
Assistance with Federal agency subscriptions	**202–741–6005**

FEDERAL REGISTER WORKSHOP

THE FEDERAL REGISTER: WHAT IT IS AND HOW TO USE IT

FOR: Any person who uses the Federal Register and Code of Federal Regulations.

WHO: Sponsored by the Office of the Federal Register.

WHAT: Free public briefings (approximately 3 hours) to present:

1. The regulatory process, with a focus on the Federal Register system and the public's role in the development of regulations.

2. The relationship between the Federal Register and Code of Federal Regulations.

3. The important elements of typical Federal Register documents.

4. An introduction to the finding aids of the FR/CFR system.

WHY: To provide the public with access to information necessary to research Federal agency regulations which directly affect them. There will be no discussion of specific agency regulations.

WHEN: Tuesday, May 17, 2005
9:00 a.m.–Noon

WHERE: Office of the Federal Register
Conference Room, Suite 700
800 North Capitol Street, NW.
Washington, DC 20002

RESERVATIONS: (202) 741–6008

Printed on recycled paper.

Contents

Federal Register

Vol. 70, No. 79

Tuesday, April 26, 2005

Agricultural Marketing Service
RULES
Irish potatoes grown in—
Idaho and Oregon, 21328–21330
PROPOSED RULES
Cotton classing, testing, and standards:
Classification services to growers; 2005 user fees, 21342–21343
NOTICES
Globe artichokes; grade standards, 21391
Lemons: grade standards, 21392

Agriculture Department
See Agricultural Marketing Service
See Animal and Plant Health Inspection Service
See Forest Service
NOTICES
Privacy Act:
Systems of records, 21389–21391

Air Force Department
NOTICES
Meetings:
Scientific Advisory Board, 21400

Animal and Plant Health Inspection Service
RULES
Plant-related quarantine, domestic:
Asian longhorned beetle, 21326–21328
West Indian fruit fly, 21325–21326

Antitrust Division
NOTICES
National cooperative research notifications:
DVD Copy Control Association, 21443
Globus Consortium, Inc., 21443–21444
North America Outdoors, Inc., 21444
OpenIB, Inc., 21444
Semiconductor Test Consortium, Inc., 21444

Army Department
See Engineers Corps
NOTICES
Environmental statements; availability, etc.:
Ft. Belvoir, VA, 21400–21401
Reports and guidance documents; availability, etc.:
Families First Business Rules, 21401

Coast Guard
RULES
Regattas and marine parades:
Annapolis Yacht Club Boat Parade, 21335
U.S. Naval Academy Crew Races, 21335–21337
PROPOSED RULES
Outer Continental Shelf activities:
Gulf of Mexico; safety zone, 21378–21380
Regattas and marine parades:
Annual Offshore Super Series Boat Race, 21376–21378

Commerce Department
See Industry and Security Bureau
See International Trade Administration
See National Oceanic and Atmospheric Administration
NOTICES
Agency information collection activities; proposals, submissions, and approvals, 21392–21393

Committee for the Implementation of Textile Agreements
NOTICES
Cotton, wool, and man-made textiles:
Vietnam, 21398
Textile and apparel categories:
Caribbean Basin Trade Partnership Act; commercial availability—
Woven fabric; boy's suits, trousers, and suit-type jackets or blazers, 21398–21399
Chinese imports; safeguard actions, 21399–21400

Defense Department
See Air Force Department
See Army Department
See Engineers Corps
See Navy Department

Education Department
NOTICES
Agency information collection activities; proposals, submissions, and approvals, 21403–21405

Employment and Training Administration
NOTICES
Grants and cooperative agreements; availability, etc.:
Workforce Investment Act—
National Farmworker Jobs Program, 21580–21606

Energy Department
See Energy Information Administration
See Federal Energy Regulatory Commission
NOTICES
Meetings:
Environmental Management Site-Specific Advisory Board—
Idaho National Engineering and Environmental Laboratory, 21405
Oak Ridge Reservation, 21405

Energy Information Administration
NOTICES
Reports and guidance documents; availability, etc.:
Weekly Natural Gas Storage Report; unscheduled release of revisions policy, 21406–21408

Engineers Corps
NOTICES
Environmental statements; notice of intent:
Brevard County, FL; Mid-Reach shore protection project, 21401–21402

Environmental Protection Agency
RULES
Air quality implementation plans; approval and promulgation; various States:
Guam; correction, 21496
Maryland, 21337–21340

PROPOSED RULES
Air quality implementation plans; approval and promulgation; various States:
Maryland, 21387–21388
Pennsylvania, 21380–21387
NOTICES
Agency information collection activities; proposals, submissions, and approvals, 21408–21410
Water pollution control:
Clean Water Act and Safe Drinking Water Act—
Proposed penalty orders; Region 5 notices issued via Internet, 21410–21411

Executive Office of the President
See Presidential Documents

Federal Aviation Administration
PROPOSED RULES
Air carrier certification and operations:
Transport category airplanes—
Flightdeck door reinforcement; security considerations, 21562–21570
Front row passenger seats; acceptable compliance methods, 21343–21344
Airworthiness directives:
Dornier, 21344–21349

Federal Communications Commission
NOTICES
Meetings; Sunshine Act, 21411

Federal Energy Regulatory Commission
RULES
Practice and procedure:
Commission issuances and proceedings; electronic notification and services, 21330–21332
PROPOSED RULES
Electric utilities (Federal Power Act):
Open access transmission tariffs; intermittent generator imbalance service schedule, 21349–21361

Federal Highway Administration
NOTICES
Environmental statements; notice of intent:
District of Columbia, 21491–21492

Federal Housing Finance Board
NOTICES
Agency information collection activities; proposals, submissions, and approvals, 21411–21430

Fish and Wildlife Service
NOTICES
Endangered and threatened species permit applications, 21439
Marine mammal permit applications, 21439–21440

Forest Service
NOTICES
Meetings:
Lake Tahoe Basin Federal Advisory Committee, 21392

General Services Administration
NOTICES
Federal Travel:
Per diem—
Various States, 21430
Meetings:
National Federal Fleet Manager Workshop and Information Fair (FedFleet 2005): Keeping in Tune, 21430

Health and Human Services Department
See National Institutes of Health
See Substance Abuse and Mental Health Services Administration
NOTICES
Committees; establishment, renewal, termination, etc.:
Minority Health Advisory Committee, 21430–21431

Homeland Security Department
See Coast Guard
See National Communications System

Housing and Urban Development Department
RULES
Mortgages and loan insurance programs:
Single family mortgage insurance—
Civil monetary penalties; treble damages for failure to engage in loss migration, 21572–21578
PROPOSED RULES
Manufactured home construction and safety standards:
Model manufactured home installation standards, 21498–21559
NOTICES
Grants and cooperative agreements; availability, etc.:
Military Construction Appropriations and Emergency Hurricane Supplemental Appropriations Act—
Disaster funds allocation; waiver modification and alternative requirements for disaster recovery grantees, 21437–21438
Reports and guidance documents; availability, etc.:
Alternative fuel vehicle report (2003 FY); web site availability, 21438–21439

Indian Affairs Bureau
NOTICES
Tribal-State Compacts approval; Class III (casino) gambling:
Seminole Nation, OK, 21440

Industry and Security Bureau
NOTICES
Export transactions:
List of unverified persons in foreign countries, guidance to exporters as to ''red flags''(Supplement No. 3 to 15 CFR part 732); update, 21394–21395

Interior Department
See Fish and Wildlife Service
See Indian Affairs Bureau
See National Park Service
See Reclamation Bureau

Internal Revenue Service
RULES
Excise taxes:
Diesel fuel and kerosene; mechanical dye injection, 21332–21335
PROPOSED RULES
Excise taxes:
Diesel fuel and kerosene; mechanical dye injection, 21361–21362

International Trade Administration
NOTICES
Antidumping:
Carbon and certain alloy steel wire rod from—
Ukraine, 21396–21397
Steel concrete reinforcing bars from—
Latvia, 21397
Antidumping and countervailing duties:
Administrative review requests, 21395–21396

Justice Department
See Antitrust Division
See Juvenile Justice and Delinquency Prevention Office
NOTICES
Grants and cooperative agreements; availability, etc.:
Community Oriented Policing Services—
Tribal Resources Program, 21442–21443

Juvenile Justice and Delinquency Prevention Office
NOTICES
Meetings:
Juvenile Justice Advisory Committee, 21444–21445
Juvenile Justice and Delinquency Prevention
Coordinating Council, 21445–21446

Labor Department
See Employment and Training Administration

National Aeronautics and Space Administration
NOTICES
Patent licenses; non-exclusive, exclusive, or partially
exclusive:
Penske Racing South, Inc., 21446
Phoenix Systems International, Inc., 21446

National Communications System
NOTICES
Meetings:
National Security Telecommunications Advisory
Committee, 21437

National Highway Traffic Safety Administration
NOTICES
Motor vehicle safety standards:
Exemption petitions, etc.
Hankook Tire America Corp., 21493
Workhorse Custom Chassis, 21492–21493

National Institutes of Health
NOTICES
Inventions, Government-owned; availability for licensing,
21431–21434
Meetings:
National Institute of Nursing Research, 21434
Patent licenses; non-exclusive, exclusive, or partially
exclusive:
Mitos, Inc., 21435

National Oceanic and Atmospheric Administration
RULES
Fishery conservation and management:
Alaska; fisheries of Exclusive Economic Zone—
Rock sole, flathead sole, and other flatfish, 21341
Northeastern United States fisheries—
Atlantic mackerel, squid, and butterfish, 21340–21341
NOTICES
Meetings:
National Marine Fisheries Service, 21397–21398

National Park Service
NOTICES
Environmental statements; availability, etc.:
Denali National Park and Preserve, AK, 21440–21441
Meetings:
Kaloko-Honokohau National Historical Park Advisory
Commission, 21441

Navy Department
NOTICES
Inventions, Government-owned; availability for licensing,
21402–21403
Meetings:
Chief of Naval Operations Executive Panel, 21403

Nuclear Regulatory Commission
NOTICES
Environmental statements; availability, etc.:
Entergy Operations Inc., 21449
Operating licenses, amendments; no significant hazards
considerations; biweekly notices, 21449–21470
Applications, hearings, determinations, etc.:
Curtiss-Wright Electro-Mechanical Corp., 21446–21447
Entergy Operations, Inc., 21447–21448

Personnel Management Office
NOTICES
Excepted service:
Schedules A, B, and C: positions placed or revoked,
21471–21474

Presidential Documents
ADMINISTRATIVE ORDERS
Government agencies and employees:
Intelligence information; designation of officers to
classify as top secret (Order of April 21, 2005),
21607–21609
Palestine Liberation Organization; waiver of statutory
provisions (Presidential Determination)
No. 2005-22 of April 14, 21611

Reclamation Bureau
NOTICES
Environmental statements; availability, etc.:
Folsom Dam Road, CA; restricted access, 21441–21442

Securities and Exchange Commission
NOTICES
Public Utility Holding Company Act of 1935 filings, 21477–
21480
Self-regulatory organizations; proposed rule changes:
Fixed Income Clearing Corporation, 21480–21481
National Association of Securities Dealers, Inc., 21481–
21484
New York Stock Exchange, Inc., 21484–21485
Options Clearing Corp., 21485–21488
Pacific Exchange, Inc., 21488–21491
Applications, hearings, determinations, etc.:
UBS Supplementary Trust, et al., 21474–21477

State Department
NOTICES
Meetings:
U.S. National Commission for UNESCO, 21491

Substance Abuse and Mental Health Services Administration
NOTICES
Agency information collection activities; proposals, submissions, and approvals, 21435–21436

Textile Agreements Implementation Committee
See Committee for the Implementation of Textile Agreements

Thrift Supervision Office
NOTICES
Agency information collection activities; proposals, submissions, and approvals, 21494–21495

Transportation Department
See Federal Aviation Administration
See Federal Highway Administration
See National Highway Traffic Safety Administration

Treasury Department
See Internal Revenue Service
See Thrift Supervision Office
PROPOSED RULES
Currency and foreign transactions; financial reporting and recordkeeping requirements:
Bank Secrecy Act; implementation—
Multibanka; special measure imposition due to designation as institution of primary money laundering concern, 21362–21369
VEF Banka; special measure imposition due to designation as institution of primary money laundering concern, 21369–21376
NOTICES
Meetings:
Federal Tax Reform, President's Advisory Panel, 21493

Separate Parts In This Issue

Part II
Housing and Urban Development Department, 21498–21559

Part III
Transportation Department, Federal Aviation Administration, 21562–21570

Part IV
Housing and Urban Development Department, 21572–21578

Part V
Labor Department, Employment and Training Administration, 21580–21606

Part VI
Executive Office of the President, Presidential Documents, 21607–21609, 21611

Reader Aids

Consult the Reader Aids section at the end of this issue for phone numbers, online resources, finding aids, reminders, and notice of recently enacted public laws.

To subscribe to the Federal Register Table of Contents LISTSERV electronic mailing list, go to http://listserv.access.gpo.gov and select Online mailing list archives, FEDREGTOC-L, Join or leave the list (or change settings); then follow the instructions.

CFR PARTS AFFECTED IN THIS ISSUE

A cumulative list of the parts affected this month can be found in the Reader Aids section at the end of this issue.

3 CFR

Administrative Orders:
Order of April 21, 2005 21609
Presidential Determination No. 2005-22 of April 14, 2005 21611

7 CFR
301 (2 documents) 21325, 21326
945 21328

Proposed Rules:
28 21342

14 CFR

Proposed Rules:
23 21562
25 (2 documents) 21343, 21562
39 (2 documents) 21344, 21346
121 21562
129 21562

18 CFR
385 21330
390 21330

Proposed Rules:
35 21349

24 CFR
30 21572
203 21572

Proposed Rules:
3280 21498
3285 21498

26 CFR
48 21332
602 21332

Proposed Rules:
48 21361

31 CFR

Proposed Rules:
103 (2 documents) 21362, 21369

33 CFR
100 (2 documents) 21335

Proposed Rules:
100 21376
147 21378

40 CFR
52 (2 documents) 21337, 21496

Proposed Rules:
52 (3 documents) 21380, 21384, 21387

50 CFR
648 21340
679 21341

Rules and Regulations

Federal Register
Vol. 70, No. 79
Tuesday, April 26, 2005

This section of the FEDERAL REGISTER contains regulatory documents having general applicability and legal effect, most of which are keyed to and codified in the Code of Federal Regulations, which is published under 50 titles pursuant to 44 U.S.C. 1510.

The Code of Federal Regulations is sold by the Superintendent of Documents. Prices of new books are listed in the first FEDERAL REGISTER issue of each week.

DEPARTMENT OF AGRICULTURE

Animal and Plant Health Inspection Service

7 CFR Part 301

[Docket No. 04–127–1]

West Indian Fruit Fly; Regulated Articles

AGENCY: Animal and Plant Health Inspection Service, USDA.

ACTION: Interim rule and request for comments.

SUMMARY: We are amending the West Indian fruit fly regulations by removing grapefruit, sweet lime, sour orange, and sweet orange from the list of regulated articles. A review of available scientific literature and other information has led us to conclude that these citrus fruits do not present a risk of spreading West Indian fruit fly. This action eliminates restrictions on the interstate movement of these citrus fruits from areas quarantined because of the West Indian fruit fly.

DATES: This interim rule is effective April 26, 2005. We will consider all comments that we receive on or before June 27, 2005.

ADDRESSES: You may submit comments by any of the following methods:

- EDOCKET: Go to *http://www.epa.gov/feddocket* to submit or view public comments, access the index listing of the contents of the official public docket, and to access those documents in the public docket that are available electronically. Once you have entered EDOCKET, click on the ''View Open APHIS Dockets'' link to locate this document.
- Postal Mail/Commercial Delivery: Please send four copies of your comment (an original and three copies) to Docket No. 04–127–1, Regulatory Analysis and Development, PPD, APHIS, Station 3C71, 4700 River Road Unit 118, Riverdale, MD 20737–1238. Please state that your comment refers to Docket No. 04–127–1.
- Federal eRulemaking Portal: Go to *http://www.regulations.gov* and follow the instructions for locating this docket and submitting comments.

Reading Room: You may read any comments that we receive on this docket in our reading room. The reading room is located in room 1141 of the USDA South Building, 14th Street and Independence Avenue, SW., Washington, DC. Normal reading room hours are 8 a.m. to 4:30 p.m., Monday through Friday, except holidays. To be sure someone is there to help you, please call (202) 690–2817 before coming.

Other Information: You may view APHIS documents published in the **Federal Register** and related information on the Internet at *http://www.aphis.usda.gov/ppd/rad/webrepor.html.*

FOR FURTHER INFORMATION CONTACT: Mr. Wayne D. Burnett, National Program Manager, PPQ, APHIS, 4700 River Road Unit 134, Riverdale, MD 20737–1236; (301) 734–4387.

SUPPLEMENTARY INFORMATION:

Background

The West Indian fruit fly, *Anastrepha obliqua* (Macquart), is a very destructive pest of fruits and vegetables, including carambola, guava, mangoes, passion fruit, peaches, and pears. This pest can cause serious economic losses by lowering the yield and quality of these fruits and vegetables. Heavy infestations can result in complete loss of these crops.

The West Indian fruit fly regulations, contained in 7 CFR 301.98 through 301.98–10 (referred to below as the regulations), restrict the interstate movement of regulated articles from quarantined areas to prevent the spread of West Indian fruit fly to noninfested areas of the United States. Regulated articles are listed in § 301.98–2, and quarantined areas are listed in § 301.98–3(c). There are currently no areas in the continental United States quarantined for the West Indian fruit fly.

Currently, the list of regulated articles includes four citrus fruits: Grapefruit, sweet lime, sour orange, and sweet orange. When we established the regulations in 2001 (see 66 FR 6429–6436), we included these citrus fruits on the list after considering the information contained in the literature available to us at the time. However, we have recently concluded, based on an analysis of the scientific literature, interception records, and identification of larvae in fruits from Mexico intercepted at border stations in California and Texas, that West Indian fruit fly has a low likelihood of infesting *Citrus* spp. Our analysis is documented in a report titled ''Host Status of *Citrus* spp. for *Anastrepha obliqua* (Diptera: Tephritidae),'' which may be viewed on the Internet at *http://www.aphis.usda.gov/ppq/ep/ff/.* The report may also be viewed on the EDOCKET Web site (*see* **ADDRESSES** above for instruction for accessing EDOCKET).

Based on the conclusions and recommendations of the analysis described above, we are amending the regulations by removing grapefruit, sweet lime, sour orange, and sweet orange from the list of regulated articles in § 301.98–2(b)(1). By making this change, this interim rule lifts restrictions on these fruits that no longer appear to be necessary.

This change will not affect any current program operations, as there are no areas in the continental United States under quarantine for the West Indian fruit fly at this time. However, current State and Federal cooperative emergency preparedness action plans focusing on the West Indian fruit fly may need to be modified to amend host lists.

Immediate Action

Immediate action is warranted to relieve restrictions that no longer appear to be necessary on the interstate movement of grapefruit, sweet lime, sour orange, and sweet orange from areas quarantined because of West Indian fruit fly. Under these circumstances, the Administrator has determined that prior notice and opportunity for public comment are contrary to the public interest and that there is good cause under 5 U.S.C. 553 for making this action effective less than 30 days after publication in the **Federal Register**.

We will consider comments we receive during the comment period for this interim rule (see **DATES** above). After the comment period closes, we will publish another document in the **Federal Register**. The document will

include a discussion of any comments we receive and any amendments we are making to the rule.

Executive Order 12866 and Regulatory Flexibility Act

For this action, the Office of Management and Budget has waived its review under Executive Order 12866.

The Animal and Plant Health Inspection Service is removing grapefruit, sweet lime, sour orange, and sweet orange from the list of regulated articles in 7 CFR 301.98–2(b). Currently, the regulations restrict the interstate movement of these commodities from areas quarantined because of West Indian fruit fly.

The Regulatory Flexibility Act requires that agencies consider the economic impact of their rules on small entities. The Small Business Administration (SBA) has established size standards for determining which economic entities are considered small. Entities that could potentially be affected by this rule include orange, sweet lime, and grapefruit growers. Growers of these fruits are considered small businesses by the SBA if their annual receipts are not more than $750,000. According to the 2002 Census of Agriculture, 18,927 farms in the United States were growing the affected commodities for a total production value of $1,830 million. About 98 percent of these farms were considered small, and large growers accounted for 54 percent of production.

Currently, no States or counties are quarantined for West Indian fruit fly. Therefore, the rule would have no impact on any potentially affected entity or on the supply or price of commodities. Instead, the rule will simply update the regulation.

Under these circumstances, the Administrator of the Animal and Plant Health Inspection Service has determined that this action will not have a significant economic impact on a substantial number of small entities.

Executive Order 12372

This program/activity is listed in the Catalog of Federal Domestic Assistance under No. 10.025 and is subject to Executive Order 12372, which requires intergovernmental consultation with State and local officials. (*See* 7 CFR part 3015, subpart V.)

Executive Order 12988

This rule has been reviewed under Executive Order 12988, Civil Justice Reform. This rule: (1) Preempts all State and local laws and regulations that are inconsistent with this rule; (2) has no retroactive effect; and (3) does not require administrative proceedings before parties may file suit in court challenging this rule.

Paperwork Reduction Act

This interim rule contains no information collection or recordkeeping requirements under the Paperwork Reduction Act of 1995 (44 U.S.C. 3501 *et seq.*).

List of Subjects in 7 CFR Part 301

Agricultural commodities, Plant diseases and pests, Quarantine, Reporting and recordkeeping requirements, Transportation.

■ Accordingly, we are amending 7 CFR part 301 as follows:

PART 301—DOMESTIC QUARANTINE NOTICES

■ 1. The authority citation for part 301 continues to read as follows:

Authority: 7 U.S.C. 7701–7772; 7 CFR 2.22, 2.80, and 371.3.

Section 301.75–15 also issued under Sec. 204, Title II, Pub. L. 106–113, 113 Stat. 1501A–293; sections 301.75–15 and 301.75–16 also issued under Sec. 203, Title II, Pub. L. 106–224, 114 Stat. 400 (7 U.S.C. 1421 note).

§ 301.98–2 [Amended]

■ 2. In § 301.98–2, the list in paragraph (b)(1) is amended by removing the entries for ''Grapefruit (*Citrus paradisi*)'', ''Lime, sweet (*Citrus aurantifolia*)'', ''Orange, sour (*Citrus aurantium*)'', and ''Orange, sweet (*Citrus sinensis*)''.

Done in Washington, DC, this 20th day of April 2005.

Elizabeth E. Gaston,

Acting Administrator, Animal and Plant Health Inspection Service.

[FR Doc. 05–8303 Filed 4–25–05; 8:45 am]

BILLING CODE 3410–34–P

DEPARTMENT OF AGRICULTURE

Animal and Plant Health Inspection Service

7 CFR Part 301

[Docket No. 05–011–1]

Asian Longhorned Beetle; Removal of Regulated Areas

AGENCY: Animal and Plant Health Inspection Service, USDA.

ACTION: Interim rule and request for comments.

SUMMARY: We are amending the Asian longhorned beetle regulations by removing portions of Cook and DuPage Counties, IL, from the list of quarantined areas and removing restrictions on the interstate movement of regulated articles from those areas. We have determined that the Asian longhorned beetle no longer presents a risk of spread from those areas and that the quarantine and restrictions are no longer necessary.

DATES: This interim rule was effective April 21, 2005. We will consider all comments that we receive on or before June 27, 2005.

ADDRESSES: You may submit comments by any of the following methods:

- EDOCKET: Go to *http://www.epa.gov/feddocket* to submit or view public comments, access the index listing of the contents of the official public docket, and to access those documents in the public docket that are available electronically. Once you have entered EDOCKET, click on the ''View Open APHIS Dockets'' link to locate this document.
- Postal Mail/Commercial Delivery: Please send four copies of your comment (an original and three copies) to Docket No. 05–011–1, Regulatory Analysis and Development, PPD, APHIS, Station 3C71, 4700 River Road Unit 118, Riverdale, MD 20737–1238. Please state that your comment refers to Docket No. 05–011–1.
- Federal eRulemaking Portal: Go to *http://www.regulations.gov* and follow the instructions for locating this docket and submitting comments.

Reading Room: You may read any comments that we receive on this docket in our reading room. The reading room is located in room 1141 of the USDA South Building, 14th Street and Independence Avenue, SW., Washington, DC. Normal reading room hours are 8 a.m. to 4:30 p.m., Monday through Friday, except holidays. To be sure someone is there to help you, please call (202) 690–2817 before coming.

Other Information: You may view APHIS documents published in the **Federal Register** and related information on the Internet at *http://www.aphis.usda.gov/ppd/rad/webrepor.html.*

FOR FURTHER INFORMATION CONTACT: Mr. Michael B. Stefan, Director, Pest Detection and Management Programs, Emergency Programs, PPQ, APHIS, 4700 River Road Unit 134, Riverdale, MD 20737–1231; (301) 734–7338.

SUPPLEMENTARY INFORMATION:

Background

The Asian longhorned beetle (ALB) (*Anoplophora glabripennis*), an insect native to China, Japan, Korea, and the Isle of Hainan, is a destructive pest of

hardwood trees. It attacks many healthy hardwood trees, including maple, horse chestnut, birch, poplar, willow, and elm. In addition, nursery stock, logs, green lumber, firewood, stumps, roots, branches, and wood debris of half an inch or more in diameter are subject to infestation. The beetle bores into the heartwood of a host tree, eventually killing the tree. Immature beetles bore into tree trunks and branches, causing heavy sap flow from wounds and sawdust accumulation at tree bases. They feed on, and over-winter in, the interiors of trees. Adult beetles emerge in the spring and summer months from round holes approximately three-eighths of an inch in diameter (about the size of a dime) that they bore through branches and trunks of trees. After emerging, adult beetles feed for 2 to 3 days and then mate. Adult females then lay eggs in oviposition sites that they make on the branches of trees. A new generation of ALB is produced each year. If this pest moves into the hardwood forests of the United States, the nursery, maple syrup, and forest product industries could experience severe economic losses. In addition, urban and forest ALB infestations will result in environmental damage, aesthetic deterioration, and a reduction in public enjoyment of recreational spaces.

The ALB regulations in 7 CFR 301.51–1 through 301.51–9 (referred to below as the regulations) restrict the interstate movement of regulated articles from quarantined areas to prevent the artificial spread of ALB to noninfested areas of the United States. Portions of Illinois, New Jersey, and New York are designated as quarantined areas. Quarantined areas are listed in § 301.51–3 of the regulations.

The regulations currently list two quarantined areas in Illinois. One, in Cook County, includes the Ravenswood community in the City of Chicago, and the other, in Cook and DuPage Counties, includes portions of O'Hare International Airport and its surrounding area.

Based on surveys conducted by inspectors of Illinois State and county agencies and by APHIS inspectors, we are removing from quarantine those areas in DuPage and Cook Counties and Chicago's Ravenswood area. The last findings of ALB in the regulated area in Park Ridge in Cook County was November 24, 2000. The last finding in the regulated area around O'Hare International Airport, including Bensenville, in DuPage County, was November 28, 2000. In Chicago's Ravenswood area, the last finding in the Kilbourn Park community was October 18, 1999, and the last finding in the Loyola community was March 8, 2001.

Since then, no evidence of ALB infestation has been found in these areas. Based on our experience, we have determined that sufficient time has passed without finding additional beetles or other evidence of infestation to conclude that ALB constitutes a negligible risk to those areas in Cook and DuPage Counties and the Kilbourn Park and Loyola communities in the Ravenswood area. Therefore, we are removing the entries for these areas from the list of quarantined areas in § 301.51–3(c). However, the Oz Park community in the City of Chicago, which falls within the larger Ravenswood area, remains under quarantine. A description of that quarantined area may be found in the regulatory text at the end of this document.

Immediate Action

Immediate action is warranted to relieve restrictions that are no longer necessary. Under these circumstances, the Administrator has determined that prior notice and opportunity for public comment are contrary to the public interest and that there is good cause under 5 U.S.C. 553 for making this action effective less than 30 days after publication in the **Federal Register**.

We will consider comments we receive during the comment period for this interim rule (see **DATES** above). After the comment period closes, we will publish another document in the **Federal Register.** The document will include a discussion of any comments we receive and any amendments we are making to the rule.

Executive Order 12866 and Regulatory Flexibility Act

For this action, the Office of Management and Budget has waived its review under Executive Order 12866.

This emergency situation makes timely compliance with the Regulatory Flexibility Act (5 U.S.C. 601 *et seq.*) impracticable. We are currently assessing the potential economic effects of this action on small entities. Based on that assessment, we will either certify that the rule will not have a significant economic impact on a substantial number of small entities or publish a regulatory flexibility analysis.

Executive Order 12372

This program/activity is listed in the Catalog of Federal Domestic Assistance under No. 10.025 and is subject to Executive Order 12372, which requires intergovernmental consultation with State and local officials. (See 7 CFR part 3015, subpart V.)

Executive Order 12988

This rule has been reviewed under Executive Order 12988, Civil Justice Reform. This rule: (1) Preempts all State and local laws and regulations that are inconsistent with this rule; (2) has no retroactive effect; and (3) does not require administrative proceedings before parties may file suit in court challenging this rule.

Paperwork Reduction Act

This interim rule contains no information collection or recordkeeping requirements under the Paperwork Reduction Act of 1995 (44 U.S.C. 3501 *et seq.*).

List of Subjects in 7 CFR Part 301

Agricultural commodities, Plant diseases and pests, Quarantine, Reporting and recordkeeping requirements, Transportation.

■ Accordingly, we are amending 7 CFR part 301 as follows:

PART 301—DOMESTIC QUARANTINE NOTICES

■ 1. The authority citation for part 301 continues to read as follows:

Authority: 7 U.S.C. 7701–7772; 7 CFR 2.22, 2.80, and 371.3.

Section 301.75–15 also issued under Sec. 204, Title II, Pub. L. 106–113, 113 Stat. 1501A–293; sections 301.75–15 and 301.75–16 also issued under Sec. 203, Title II, Pub. L. 106–224, 114 Stat. 400 (7 U.S.C. 1421 note).

■ 2. In § 301.51–3(c), under the heading ''Illinois,'' the entry for Cook County is revised to read as follows and the entry for Cook and DuPage Counties is removed.

§ 301.51–3 Quarantined areas.

* * * * *

(c) * * *

Illinois

Cook County. That area in the Oz Park community in the City of Chicago that is bounded as follows: Beginning at the intersection of North Damen Avenue and West Addison Street; then east and east-northeast on West Addison Street to North Lake Shore Drive; then due east from that point to the Lake Michigan shoreline; then south along the Lake Michigan shoreline to a point due east of the intersection of North Lake Shore Drive and Chicago Avenue; then west from that point to the intersection of North Lake Shore Drive and Chicago Avenue; then west on Chicago Avenue to North Damen Avenue; then north on

North Damen Avenue to the point of beginning.

* * * * *

Done in Washington, DC, this 21st day of April 2005.

Elizabeth E. Gaston,

Acting Administrator, Animal and Plant Health Inspection Service.

[FR Doc. 05–8302 Filed 4–25–05; 8:45 am]

BILLING CODE 3410–34–P

DEPARTMENT OF AGRICULTURE

Agricultural Marketing Service

7 CFR Part 945

[Docket No. FV05–945–1 FR]

Irish Potatoes Grown in Certain Designated Counties in Idaho, and Malheur County, OR; Relaxation of Handling Regulations

AGENCY: Agricultural Marketing Service, USDA.

ACTION: Final rule.

SUMMARY: This rule relaxes the minimum size requirement for all U.S. No. 2 grade non-red round potatoes handled under the marketing order for Idaho-Eastern Oregon potatoes to 1⅞ inches minimum diameter. This relaxation in the handling regulations was unanimously recommended by the Idaho-Eastern Oregon Potato Committee (Committee), the agency responsible for local administration of the marketing order program in the designated production area. This change is intended to improve the marketing of Idaho-Eastern Oregon potatoes and increase returns to producers.

EFFECTIVE DATE: April 27, 2005.

FOR FURTHER INFORMATION CONTACT: Barry Broadbent, Marketing Specialist, Northwest Marketing Field Office, Marketing Order Administration Branch, Fruit and Vegetable Programs, AMS, USDA, 1220 SW. Third Avenue, Suite 385, Portland, OR 97204; telephone: (503) 326–2724, Fax: (503) 326–7440; or George J. Kelhart, Technical Advisor, Marketing Order Administration Branch, Fruit and Vegetable Programs, AMS, USDA, 1400 Independence Avenue, SW., STOP 0237, Washington, DC 20250–0237; telephone: (202) 720–2491, Fax: (202) 720–8938.

Small businesses may request information on complying with this regulation by contacting Jay Guerber, Marketing Order Administration Branch, Fruit and Vegetable Programs, AMS, USDA, 1400 Independence Avenue, SW., STOP 0237, Washington, DC 20250–0237; telephone: (202) 720–2491, Fax: (202) 720–8938, or e-mail: *Jay.Guerber@usda.gov.*

SUPPLEMENTARY INFORMATION: This final rule is issued under Marketing Agreement and Marketing Order No. 945, both as amended (7 CFR part 945), regulating the handling of Irish potatoes grown in certain designated counties in Idaho, and Malheur County, Oregon, hereinafter referred to as the ''order.'' The order is effective under the Agricultural Marketing Agreement Act of 1937, as amended (7 U.S.C. 601–674), hereinafter referred to as the ''Act.''

The Department of Agriculture (USDA) is issuing this rule in conformance with Executive Order 12866.

This final rule has been reviewed under Executive Order 12988, Civil Justice Reform. This rule is not intended to have retroactive effect. This rule will not preempt any State or local laws, regulations, or policies, unless they present an irreconcilable conflict with this rule.

The Act provides that administrative proceedings must be exhausted before parties may file suit in court. Under section 608c(15)(A) of the Act, any handler subject to an order may file with USDA a petition stating that the order, any provision of the order, or any obligation imposed in connection with the order is not in accordance with law and request a modification of the order or to be exempted therefrom. A handler is afforded the opportunity for a hearing on the petition. After the hearing USDA would rule on the petition. The Act provides that the district court of the United States in any district in which the handler is an inhabitant, or has his or her principal place of business, has jurisdiction to review USDA's ruling on the petition, provided an action is filed not later than 20 days after the date of the entry of the ruling.

This final rule relaxes the minimum size requirement for all U.S. No. 2 grade non-red round potatoes handled under the order to 1⅞ inches minimum diameter. Currently, U.S. No. 2 grade round red-skinned potato varieties have to meet this requirement. The other U.S. No. 2 round varieties have to be 2 inches minimum diameter or 4 ounces minimum weight, provided that at least 40 percent of the potatoes in each lot have to be 5 ounces or heavier.

Sections 945.51 and 945.52 of the order provide authority for the establishment and modification of grade, size, quality, and maturity regulations applicable to the handling of potatoes. Section 945.341 establishes minimum grade, size, and maturity requirements for potatoes handled subject to the order. In addition to the current minimum size requirement specifications mentioned in the previous paragraph, § 945.341 also allows potatoes that are U.S. No. 1 grade to meet a less stringent size B requirement (1½ inches minimum and 2¼ inches maximum) as specified in the United States Standards for Grades of Potatoes (7 CFR 51.1540–51.1566).

At its meeting on November 4, 2004, the Committee unanimously recommended reducing the minimum size requirement for all varieties of U.S. No. 2 grade round potatoes to 1⅞ inches minimum diameter.

Committee members stated that round potato production, particularly for non-red varieties, has been increasing in recent years. Non-red round potato varieties now make up a significant percentage of total round potato production. In the past, red-skinned varieties were essentially the only round varieties produced within the production area. Some new round varieties that have been introduced have skin colors such as white, yellow, gold, purple, blue, and pink.

Committee members believe that it is important that the handling regulations be changed to recognize the significant increase in the production of non-red varieties of round potatoes. They believe that relaxing the minimum size requirement for U.S. No. 2 grade round potatoes would enable handlers to market a larger portion of the crop in fresh market outlets and meet the needs of buyers.

According to the Committee, quality assurance is very important to the industry and to its customers. Providing the public with acceptable quality produce that is appealing to the consumer on a consistent basis is necessary to maintain buyer confidence in the marketplace. The Committee reports that potato size is important to buyers and that providing the sizes desired is important to promote sales. Buyers have indicated that 1⅞ inches minimum diameter for all varieties of round potatoes is a desirable size.

This change is expected to improve the marketing of Idaho-Eastern Oregon potatoes and increase returns to producers.

This rule has no impact on potato imports covered by section 608e of the Act.

Final Regulatory Flexibility Analysis

Pursuant to the requirements set forth in the Regulatory Flexibility Act (RFA), the Agricultural Marketing Service (AMS) has considered the economic impact of this action on small entities.

Accordingly, AMS has prepared this final regulatory flexibility analysis.

The purpose of the RFA is to fit regulatory actions to the scale of business subject to such actions in order that small businesses will not be unduly or disproportionately burdened. Marketing orders issued pursuant to the Act, and rules issued thereunder, are unique in that they are brought about through group action of essentially small entities acting on their own behalf. Thus, both statutes have small entity orientation and compatibility.

There are approximately 52 handlers of Idaho-Eastern Oregon potatoes who are subject to regulation under the order and about 900 potato producers in the regulated area. Small agricultural service firms, which include potato handlers, are defined by the Small Business Administration (SBA) (13 CFR 121.201) as those having annual receipts of less than $6,000,000, and small agricultural producers are defined as those whose annual receipts are less than $750,000.

Based on a three-year average fresh potato production of 33,767,000 hundredweight as calculated from Committee records, a three-year average of producer prices of $5.18 per hundredweight reported by the National Agricultural Statistics Service, and 900 Idaho-Eastern Oregon potato producers, the average annual producer revenue is approximately $194,349. It can be concluded, therefore, that a majority of these producers would be classified as small entities.

In addition, based on Committee records and 2003–04 f.o.b. shipping point prices ranging from $4.00 to $28.00 per hundredweight reported by USDA's Market News Service, most of the Idaho-Eastern Oregon potato handlers do not ship over $6,000,000 worth of potatoes. In view of the foregoing, it can be concluded that a majority of the handlers would be classified as small entities as defined by the SBA.

This final rule establishes a minimum size requirement of 1⅞ inches minimum diameter for all U.S. No. 2 grade round potatoes. Currently, the minimum size requirement for U.S. No. 2 grade round varieties, other than red, is 2 inches minimum diameter or 4 ounces minimum weight provided that at least 40 percent of the potatoes in each lot must be 5 ounces or heavier. The red-skinned round varieties have to be 1⅞ inches minimum diameter.

Committee members believe that it is important that the handling regulations be changed to recognize the significant increase in the production of non-red varieties of round potatoes. They believe that relaxing the minimum size requirement for U.S. No. 2 grade round potatoes will enable handlers to market a larger portion of the crop in fresh market outlets and meet the needs of buyers. Buyers have indicated that the 1⅞ inches minimum diameter is a desirable size. This change is expected to improve the marketing of Idaho-Eastern Oregon potatoes and increase returns to producers.

Authority for this action is provided in §§ 945.51 and 945.52 of the order.

At the November 4, 2004, meeting, the Committee discussed the impact of this change on handlers and producers. This action is a relaxation of the handling regulations and, as such, should either generate a positive impact or no impact on industry participants. The Committee did not foresee a situation in which this change will negatively impact either handlers or producers.

Round type potatoes are produced and handled by only a small percentage of the industry. The predominant producing regions are centered around the American Falls, Idaho Falls, and Blackfoot areas of Idaho. Acreage is approximately 6,000 to 7,000 acres, which represents only about 2 percent of the production area's 355,000 acres planted to potatoes in 2004.

Round potato production is increasing within the production area. Shipments for the 2003–2004 season were approximately 300,000 hundredweight. The Committee estimates that round potato shipments for the 2004–2005 season could approach 800,000 hundredweight. The Committee reported that one round yellow-skinned variety might account for 500,000 hundredweight. Through week 33 of the 2004–2005 season, reported shipments of round potatoes were up 69 percent from the prior year.

The Committee reported that smaller size round potatoes of good quality receive premium prices. This contention is consistent with USDA Market News Service reports. Market News does not report on round type potatoes in the Idaho-E. Oregon area, but does report on other round potato producing regions. It would be reasonable to expect price trends between production areas to move together, given that the regions would compete with each other for sales in the domestic market.

Relaxing the size requirement will allow producers and handlers of non-red U.S. No. 2 grade round potatoes to market a greater percentage of their crop under the order. This should lead to increased total net returns for those firms. The benefits derived from this change are not expected to be disproportionately greater or less for small handlers or producers than for larger entities.

The Committee discussed alternatives to this change. One alternative included making no change at all to the regulations. The Committee did not believe this alternative would meet the needs of buyers or benefit the industry. Another alternative discussed was to allow round potatoes to be exempted from regulations under Certificate of Privilege provisions provided within the order. This option also was rejected because it would allow lower quality potatoes to be shipped to the fresh market. Lastly, the Committee considered further relaxing the size requirement for all round potatoes below the 1⅞ inches minimum diameter. The Committee believed that relaxing the minimum size requirement for U.S. No. 2 round potatoes below 1⅞ inches would result in buyer dissatisfaction. Producers and handlers who wish to ship smaller round potatoes may do so by conforming to the U.S. No. 1 grade standard.

With only a small amount of the total potato crop in the production area expected to be affected by relaxing the size requirement, the Committee believes that relaxing the size requirement of non-red-skinned U.S. No. 2 round potatoes to a 1⅞ inches minimum diameter will provide the greatest amount of benefit to the industry with the least amount of cost.

This final rule relaxes minimum size requirements under the marketing order. Accordingly, this action will not impose any additional reporting or recordkeeping requirements on either small or large potato handlers and importers. As with all Federal marketing order programs, reports and forms are periodically reviewed to reduce information requirements and duplication by industry and public sector agencies.

As noted in the initial regulatory flexibility analysis, USDA has not identified any relevant Federal rules that duplicate, overlap, or conflict with this rule. However, as previously stated, potatoes handled under the order must meet certain requirements set forth in the United States Standards for Potatoes (7 CFR 51.1540–51.1566) issued under the Agricultural Marketing Act of 1946 (7 U.S.C. 1621, *et seq.*). Standards issued under the Agricultural Marketing Act of 1946 are otherwise voluntary.

Further, the Committee's meeting was widely publicized throughout the potato industry, and all interested persons were invited to attend the meeting and participate in Committee deliberations. Like all Committee meetings, the November 4, 2004, meeting was a public

meeting and all entities, both large and small, were able to express their views on this issue. Finally, interested persons were invited to submit information on the regulatory and informational impacts of this action on small businesses.

A proposed rule concerning this action was published in the **Federal Register** on January 24, 2005 (70 FR 3313). Copies of the rule were mailed or sent via facsimile to all Committee members and potato handlers. Finally, the rule was made available through the Internet by the Office of the Federal Register and USDA. A 60-day comment period ending March 25, 2005, was provided to allow interested persons to respond to the proposal. No comments were received.

A small business guide on complying with fruit, vegetable, and specialty crop marketing agreements and orders may be viewed at the following Web site: *http://www.ams.usda.gov/fv/moab.html.* Any questions about the compliance guide should be sent to Jay Guerber at the previously mentioned address in the **FOR FURTHER INFORMATION CONTACT** section.

After consideration of all relevant material presented, including the information and recommendation submitted by the Committee and other available information, it is hereby found that this rule, as hereinafter set forth, will tend to effectuate the declared policy of the Act.

It is further found that good cause exists for not postponing the effective date of this rule until 30 days after publication in the **Federal Register** (5 U.S.C. 553) because handlers are already shipping round potatoes from the 2004–2005 crop and handlers want to take advantage of the relaxation as soon as possible. Further, handlers are aware of this rule, which was recommended at a public meeting. Also, a 60-day comment period was provided for in the proposed rule and no comments were received.

List of Subjects in 7 CFR Part 945

Marketing agreements, Potatoes, Reporting and recordkeeping requirements.

■ For the reasons set forth above, 7 CFR part 945 is amended as follows:

PART 945—IRISH POTATOES GROWN IN CERTAIN DESIGNATED COUNTIES IN IDAHO, AND MALHEUR COUNTY, OREGON

■ 1. The authority citation for 7 CFR part 945 continues to read as follows:

Authority: 7 U.S.C. 601–674.

§ 945.341 [Amended]

■ 2. In § 945.341, paragraph (a)(2)(i), remove the words ''*Round red varieties.*'' and add in their place ''*Round varieties.*''

Dated: April 20, 2005.

Kenneth C. Clayton,

Acting Administrator, Agricultural Marketing Service.

[FR Doc. 05–8246 Filed 4–25–05; 8:45 am]

BILLING CODE 3410–02–P

DEPARTMENT OF ENERGY

Federal Energy Regulatory Commission

18 CFR Parts 385 and 390

[Docket No. RM04–9–001]

Electronic Notification of Commission Issuances

Issued April 13, 2005.

AGENCY: Federal Energy Regulatory Commission, DOE.

ACTION: Final rule; order on rehearing of Order No. 653.

SUMMARY: This order on rehearing makes several minor revisions to the Final Rule that was adopted in Order No. 653. The Commission, in that order, amended its regulations to provide for electronic service of Commission issuances and to enhance the use of electronic service between parties to Commission proceedings. The revisions adopted here are necessary to clarify the rules governing service among parties.

DATES: *Effective* April 26, 2005.

FOR FURTHER INFORMATION CONTACT: Wilbur Miller, Federal Energy Regulatory Commission, 888 First Street, NE., Washington, DC 20426, (202) 502–8953.

SUPPLEMENTARY INFORMATION:

Before Commissioners: Pat Wood, III, Chairman; Nora Mead Brownell, Joseph T. Kelliher, and Suedeen G. Kelly.

Order No. 653–A—Order on Rehearing and Clarification

1. The Commission issued Order No. 653 on February 10, 2005. In that order it adopted revisions to its regulations to, among other things, provide for electronic service of Commission issuances by the Secretary in proceedings beginning on or after March 21, 2005; modify its electronic registration (eRegistration) system to include e-mail addresses of the members of service lists; and increase the usage of electronic methods of service by service list members serving documents upon one another. Electronic Notification of Commission Issuances, Order No. 653, 70 FR 8720 (Feb. 23, 2005). The order required persons wishing to be included on the service list of proceedings that begin on or after March 21, 2005, to eRegister with their e-mail addresses, so as to facilitate electronic service of Commission issuances by the Secretary, as well as electronic service by participants upon each other.[1] The order further amended the Commission's regulations to provide that, absent agreement otherwise, participants shall serve one another electronically in all proceedings, not just those beginning on or after March 21.[2]

2. The Commission has received one rehearing request, filed by Spiegel & McDiarmid (Spiegel). Spiegel requests rehearing or clarification on several, mainly technical points, and also requests that the Commission stay the effectiveness of the Final Rule.

3. One point that Spiegel raises, and with which the Commission agrees, is that the requirement for electronic service, absent agreement among participants, in proceedings begun prior to March 21 may create difficulties in some cases. Because the requirement that service list members eRegister with their e-mail addresses is effective only for proceedings beginning on or after that date, a participant in a proceeding begun before that date would be required to obtain an e-mail address for each service list member. In the interest of clarity, the Commission is revising Rule 2010(f)[3] to provide for electronic service where the sender and recipient agree.

4. Spiegel also expresses concern that the revised rules would require electronic service between participants of protected materials. Spiegel correctly notes that Order No. 653 effectively substituted electronic for paper service with respect to protected information. In Spiegel's view, protection of electronic information is more difficult than protection of paper documents, with a higher degree of risk of inadvertent disclosure.

5. In the interest of allowing participants the necessary flexibility to protect sensitive information, the Commission is revising Rule 2010(f) so that service of protected information in electronic form is not required. The revision provides that the serving participant may employ paper service where electronic service could jeopardize the security of sensitive information.

---

[1] 18 CFR 385.2010(h) (2004).

[2] 18 CFR 385.2010(f) (2004).

[3] *Id.*

6. Spiegel next points to the Commission's indication in Order No. 653 that it will require standardized language in the subject line of service e-mails. The purpose of such a requirement would be to allow recipients to set their filters so as to avoid rejecting service e-mails. Spiegel complains that this requirement was not added to the regulations.

7. This was not an inadvertent omission. The Commission as a general matter does not place technical requirements in its electronic filing and service regulations. Such requirements, particularly in connection with information technology applications, change often. Revising the regulations for each such change would be cumbersome and impractical. It was the Commission's intention to place rules, such as standardized subject line language, on its Web site in a location where they would be readily visible to all users. Since Order No. 653 was issued, the Commission's staff has had extensive contact with customers regarding, among other things, internal forwarding rules, which companies and law firms often use to route important e-mails to the right person. Forwarding rules, in turn, have implications for standardized subject line language. The Commission is endeavoring now to find solutions that will work for its customers. Once it has done so, instructions will be posted at FERC Online. Placing such requirements in the regulations would seriously hamper the Commission's efforts to identify viable business practices. Spiegel's request on this subject therefore must be rejected.

8. Spiegel points out that the disclaimer on the Commission's Web site [4] states that the paper version of a filed document is the official version. For many electronically filed documents, of course, there is no paper version. This matter is beyond the scope of Order No. 653. The Commission will, however, be revising the disclaimer.

9. Spiegel next states that, although the Commission's regulations governing waivers of the requirement to eRegister refer to a paper registration form to be filed with the Secretary with a request for a waiver, there is no form available from the Secretary. The Commission is revising its regulations [5] to remove the reference to a form. A person seeking a waiver need simply file a request stating its reasons, together with the name and address of a contact.

10. Finally, Spiegel requests clarification on modifying service list contacts. Spiegel's questions are not entirely clear, but it seems to be asking whether it can use a general service e-mail, as opposed to an individual's e-mail, as a service list contact. It also appears to be asking how to modify existing service list contact information.

11. These are technical questions better addressed through the use of the phone number or e-mail address for support, available at *http://www.ferc.gov/docs-filing/docs-filing.asp.* The Commission does note, however, that a participant may employ a general e-mail address for document service when it adds contacts to the service list. General e-mail addresses, however, should only be listed as ''other contacts.'' The ''primary contact'' should be an individual person. With respect to the second question, modifications to service list contacts must be made by the filing of a notice with the Commission, as such changes must be made manually by the Secretary. The other participants must also be notified of changes to service list contact information. The Commission will, however, delete the word ''written'' from Rule 2010(c)(2),[6] as there is no reason a request to change service list contact information cannot be filed electronically.

12. Given these revisions, the Commission sees no purpose in a stay of Order No. 653. This request is therefore denied.

Information Collection Statement

13. Office of Management and Budget (OMB) regulations require OMB to approve certain information collection requirements imposed by agency rule.[7] This Final Rule does not contain any information collection requirements and compliance with the OMB regulations is thus not required.

Environmental Analysis

14. The Commission is required to prepare an Environmental Assessment or an Environmental Impact Statement for any action that may have a significant adverse effect on the human environment.[8] The Commission has categorically excluded certain actions from this requirement as not having a significant effect on the human environment. Included in the exclusion are rules that are clarifying, corrective, or procedural or that do not substantially change the effect of the regulations being amended.[9] This Final Rule is procedural in nature and therefore falls under this exception; consequently, no environmental consideration is necessary.

Regulatory Flexibility Act Certification

15. The Regulatory Flexibility Act of 1980 (RFA) [10] generally requires a description and analysis of final rules that will have significant economic impact on a substantial number of small entities. The Commission is not required to make such analyses if a rule would not have such an effect. The Commission certifies that this Final Rule will not have such an impact on small entities.

Document Availability

16. In addition to publishing the full text of this document in the **Federal Register**, the Commission provides all interested persons an opportunity to view and/or print the contents of this document via the Internet through FERC's home page (*http://www.ferc.gov*) and in FERC's Public Reference Room during normal business hours (8:30 a.m. to 5 p.m. eastern time) at 888 First Street, NE., Room 2A, Washington, DC 20426.

17. From FERC's Home Page on the Internet, this information is available in the Commission's document management system, eLibrary. The full text of this document is available on eLibrary in PDF and Microsoft Word format for viewing, printing, and/or downloading. To access this document in eLibrary, type the docket number excluding the last three digits of this document in the docket number field.

18. User assistance is available for eLibrary and the FERC's Web site during normal business hours. For assistance, please contact FERC Online Support at 1–866–208–3676 (toll free) or 202–502–6652 (e-mail at *FERCOnlineSupport@FERC.gov*), or the Public Reference Room at 202–502–8371, TTY 202–502–8659 (e-mail at *public.referenceroom@ferc.gov*).

Effective Date

19. These regulations are effective April 26, 2005.

20. The provisions of 5 U.S.C. 801 regarding Congressional review of Final Rules does not apply to this Final Rule, because the rule concerns agency procedure and practice and will not substantially affect the rights of non-agency parties.

[4] *http://ferc.gov/disclaimers.asp.*

[5] 18 CFR 390.3(a) (2004).

[6] 18 CFR 385.2010(c)(2) (2004).

[7] 5 CFR 1320.12 (2004).

[8] Order No. 486, Regulations Implementing the National Environmental Policy Act, 52 FR 47897 (Dec. 17, 1987), FERC Stats. & Regs. Preambles 1986–1990 ¶ 30,783 (1987).

[9] 18 CFR 380.4(a)(2)(ii).

[10] 5 U.S.C. 601–612.

List of Subjects

18 CFR Part 385

Administrative practice and procedure, Electric utilities, Penalties, Pipelines, Reporting and recordkeeping requirements.

18 CFR Part 390

Administrative practice and procedure, Electronic filing, Reporting and recordkeeping requirements.

By the Commission.

Magalie R. Salas,

Secretary.

■ In consideration of the foregoing, the Commission grants rehearing and clarification in part, denies the request for a stay, and amends Parts 385 and 390, Chapter I, Title 18, *Code of Federal Regulations,* as follows.

PART 385—RULES OF PRACTICE AND PROCEDURE

■ 1. The authority citation for Part 385 continues to read as follows:

Authority: 5 U.S.C. 551–557; 15 U.S.C. 717–717z, 3301–3432; 16 U.S.C. 791a–825r, 2601–2645; 28 U.S.C. 2461; 31 U.S.C. 3701, 9701; 42 U.S.C. 7101–7352; 49 U.S.C. 60502; 49 App. U.S.C. 1–85 (1988).

■ 2. Amend § 385.2010 by removing the word ''written'' from paragraph (c)(2) and revising paragraph (f) to read as follows:

§ 385.2010 Service (Rule 2010).

* * * * *

(f) *Methods of service.* (1) Except as provided in paragraph (g) of this section, service of any document in proceedings commenced prior to March 21, 2005, must be made by:

(i) Electronic means where the sender and recipient agree to such means;

(ii) United States mail, first class or better; or

(iii) Delivery in a manner that, and to a place where, the person on whom service is required may reasonably be expected to obtain actual and timely receipt.

(2) Except as provided in paragraph (g) of this section, service of any document in proceedings commenced on or after March 21, 2005, must be made by electronic means unless the sender and recipient agree otherwise or the recipient's e-mail address is unavailable from the official service list, except in the case of a recipient who has secured a waiver under the provisions of § 390.3 of this chapter, or is exempt under the provisions of § 390.4 of this chapter, or in the case of a protected or confidential document the security of which might be jeopardized by electronic service, in which case service upon that recipient or of that document only shall be made by:

(i) United States mail, first class or better; or

(ii) Delivery in a manner that, and to a place where, the person on whom service is required may reasonably be expected to obtain actual and timely receipt.

(3) Service of a document by electronic means shall be made by the transmission of a link to that document in the Commission's eLibrary system or by alternate means reasonably calculated to make the document available to required recipients. Alternate means may include but are not limited to, attachment of an electronic copy of the document to an e-mail or transmission of a link to an Internet site containing the document. It is the sender's responsibility to take reasonable steps to ensure that the means employed for service will be within the technological capabilities of the recipients.

* * * * *

PART 390—ELECTRONIC REGISTRATION

■ 3. The authority citation for Part 390 continues to read as follows:

Authority: 5 U.S.C. 551–557; 15 U.S.C. 717–717z, 3301–3432; 16 U.S.C. 791a–825r, 2601–2645; 28 U.S.C. 2461; 31 U.S.C. 9701; 42 U.S.C. 7101–7352; 49 U.S.C. 60502; 49 App. U.S.C. 1–85 (1988).

■ 4. Amend § 390.3

■ A. By revising paragraph (a); and

■ B. By removing the phrase ''using the paper form prescribed under'' and adding in its place, the phrase, ''pursuant to''.

The revision reads as follows:

§ 390.3 Waiver applications.

(a) A person may satisfy the requirement of Sec. 390.1 by submitting a written statement showing good cause why the person is unable to register electronically, and including the name and address of the person serving as a contact. The statement must be mailed to the Secretary, Federal Energy Regulatory Commission, 888 First Street, NE., Washington, DC 20426, or hand delivered to Room 1A at the same address.

* * * * *

[FR Doc. 05–8247 Filed 4–25–05; 8:45 am]

BILLING CODE 6717–01–P

DEPARTMENT OF THE TREASURY

Internal Revenue Service

26 CFR Parts 48 and 602

[TD 9199]

RIN 1545–BE44

Diesel Fuel and Kerosene Excise Tax; Dye Injection

AGENCY: Internal Revenue Service (IRS), Treasury.

ACTION: Final and temporary regulations.

SUMMARY: This document contains regulations relating to the diesel fuel and kerosene excise tax. These regulations reflect changes made by the American Jobs Creation Act of 2004 regarding mechanical dye injection systems for diesel fuel and kerosene. These regulations affect certain enterers, refiners, terminal operators, and throughputters. The text of the temporary regulation also serves as the text of the proposed regulations set forth in the notice of proposed rulemaking on this subject elsewhere in this issue of the **Federal Register**.

DATES: *Effective Date:* These regulations are effective October 24, 2005.

Applicability Dates: For dates of applicability, see §§ 48.4082–1T(e) and 48.4101–1T(h)(3)(iv).

FOR FURTHER INFORMATION CONTACT: William Blodgett at (202) 622–3090 (not a toll-free number).

SUPPLEMENTARY INFORMATION:

Paperwork Reduction Act

These temporary regulations are being issued without prior notice and public procedure pursuant to the Administrative Procedure Act (5 U.S.C. 553). For this reason, the collection of information contained in these regulations has been reviewed and, pending receipt and evaluation of public comments, approved by the Office of Management and Budget under control number 1545–1418. Responses to this collection of information are required to obtain a tax benefit.

An agency may not conduct or sponsor, and a person is not required to respond to, a collection of information unless the collection of information displays a valid OMB control number.

For further information concerning this collection of information, and where to submit comments on the collection of information and the accuracy of the estimated burden, and suggestions for reducing this burden, please refer to the preamble to the cross-referencing notice of proposed

rulemaking published in the Proposed Rules section of this issue of the **Federal Register**.

Books or records relating to a collection of information must be retained as long as their contents may become material in the administration of any internal revenue law. Generally, tax returns and tax return information are confidential, as required by 26 U.S.C. 6103.

Background

Section 4081 of the Internal Revenue Code (Code) imposes a tax on certain removals, entries, and sales of diesel fuel and kerosene. However, section 4082(a) provides that the tax is not imposed if the diesel fuel or kerosene (1) is destined for a nontaxable use (as defined in section 4082(b)), (2) is indelibly dyed in accordance with regulations that the Secretary shall prescribe, and (3) meets such marking requirements (if any) as may be prescribed by the Secretary in regulations.

Section 4082(a)(2) was amended by the American Jobs Creation Act of 2004 (the Act) to provide that the diesel fuel and kerosene must be indelibly dyed ''by mechanical injection.'' The Act also requires the Secretary to issue regulations regarding mechanical dye injection systems and to include in the regulations standards for making such systems tamper resistant. The amendments to section 4082(a)(2) are effective on the 180th day after the date on which the Secretary issues such regulations.

The Act also adds new section 6715A, which imposes a penalty on any person that tampers with a mechanical dye injection system and any operator of a mechanical injection system that fails to maintain the security standards for such system in accordance with the regulations.

Explanation of Provisions

Under these temporary regulations, diesel fuel or kerosene that is removed from a refinery, terminal, or blending facility is exempt from tax under section 4082(a) only if the required type and amount of dye is added to the fuel by means of a mechanical injection system that is approved by the IRS. Manual (or splash) dyeing is not allowed, even in the case of a malfunction of the mechanical injection system.

Application for approval of mechanical injection systems will be made in the form and manner prescribed by the IRS. It is anticipated that the application process will be similar to the process now in place for applications for registrations under section 4101. It is also anticipated that the IRS will act on such applications within a reasonable time.

Under these temporary regulations, the IRS will approve a mechanical injection system only if it contains adequate calibrated measurement devices, shut-off devices, and security equipment to secure these devices and other access points.

Generally, the security equipment must consist of either a ''seal'' system or a ''lock box'' system. The ''seal'' system requires that a seal be attached to each measuring device, each shut-off device, and any other access point to the mechanical injection system. The seals must secure the devices from tampering and, if necessary, may be accompanied by locks to ensure the necessary security. The alternative to the ''seal'' system is the ''lock box'' system, which allows the operator to use one secured container, or box, to control access to each measuring device, each shut-off device, and any other access point to the mechanical injection system. Such container may be transparent for ease of satisfying the inspection requirements. If the ''lock box'' system is used, the container must be secured by a seal that satisfies all of the ''seal'' requirements. Each seal, whether it secures a ''lock box'' or attaches to an access point, must be separately identifiable by a numbering or coding system maintained by the terminal operator. In all cases, the type of allowable seal may be prescribed by the IRS.

These temporary regulations also set out ongoing duties of the operator of an approved mechanical injection system to maintain the system's security standards and to keep certain records. However, no particular form for the records is prescribed.

Special Analyses

It has been determined that this Treasury decision is not a significant regulatory action as defined in Executive Order 12866. Therefore, a regulatory flexibility assessment is not required. It also has been determined that section 553(b) of the Administrative Procedure Act (5 U.S.C. chapter 5) does not apply to these regulations. For the applicability of the Regulatory Flexibility Act (5 U.S.C. chapter 6), refer to the Special Analyses section of the preamble to the cross-reference notice of proposed rulemaking published in the Proposed Rules section in this issue of the **Federal Register**. Pursuant to section 7805(f) of the Code, these temporary regulations will be submitted to the Chief Counsel for Advocacy of the Small Business Administration for comment on their impact on small business.

Drafting Information

The principal author of these regulations is William Blodgett, Office of Associate Chief Counsel (Passthroughs and Special Industries), IRS. However, other personnel from the IRS and Treasury Department participated in their development.

List of Subjects

26 CFR Part 48

Excise taxes, Reporting and recordkeeping requirements.

26 CFR Part 602

Reporting and recordkeeping requirements.

Adoption of Amendments to the Regulations

■ Accordingly, 26 CFR parts 48 and 602 are amended as follows:

PART 48—MANUFACTURERS AND RETAILERS EXCISE TAXES

■ **Paragraph 1.** The authority citation for part 48 is amended by adding an entry in numerical order to read, in part, as follows:

Authority: 26 U.S.C. 7805 * * *

Section 48.4082–1T also issued under 26 U.S.C. 4082(a). * * *

■ **Par. 2.** Section 48.4082–1 is amended by revising paragraphs (d) and (e) to read as follows:

§ 48.4082–1 Diesel fuel and kerosene; exemption for dyed fuel.

* * * * *

(d) [Reserved]. For further guidance, see § 48.4082–1T(d).

(e) *Effective date*—(1) Except as provided in paragraph (e)(2) of this section, this section is applicable March 14, 1996.

(2) [Reserved] For further guidance, see § 48.4082–1T(e)(2).

■ **Par. 3.** Section 48.4082–1T is added to read as follows:

§ 48.4082–1T Diesel fuel and kerosene; exemption for dyed fuel (temporary).

(a) through (c) [Reserved]. For further guidance, see § 48.4082–1(a) through (c).

(d) *Time and method for adding dye*—(1) *In general.* Except as provided by paragraph (d)(6) of this section, diesel fuel or kerosene satisfies the dyeing requirements of this paragraph (d) only if the dye required by § 48.4082–1(b) is combined with the diesel fuel or kerosene by means of a mechanical injection system that is approved by the Commissioner for use

at the facility where the dyeing occurs. Application for approval must be made in the form and manner required by the Commissioner. Rules similar to the rules of § 48.4101–1(g) apply to the Commissioner's action on the applications.

(2) *Mechanical injection system; requirements.* The Commissioner will approve a mechanical injection system only if—

(i) The system has features that automatically inject an amount of dye that satisfies the concentration requirements of § 48.4082–1(b) into diesel fuel or kerosene as the diesel fuel or kerosene is delivered from the bulk transfer/terminal system into the transport compartment of a truck, trailer, railroad car, or other means of nonbulk transfer;

(ii) The system has calibrated devices that accurately measure and record the amount of dye and the amount of diesel fuel and kerosene that is dispensed for each removal;

(iii) The system has automatic shut-off devices that prevent the removal of more than 100 gallons of undyed diesel fuel or kerosene in the case of a system malfunction;

(iv) The system is secured by either—

(A) Unbroken seals that are issued, installed, and maintained by the terminal operator and secure the measurement devices, shut-off devices, and other access points to the injection system; or

(B) A secured container that controls access to the measurement devices, shut-off devices, and other access points and is secured by an unbroken seal issued, installed, and maintained by the terminal operator;

(v) Each seal securing the system bears a unique identifying number or code and is produced in a manner that provides adequate assurance against duplication; and

(vi) The operator of the facility has written procedures in place for complying with its duty, described in paragraph (d)(4) of this section, to maintain the system's security standards.

(3) *Mechanical injection system; basis for approval.* In determining whether to approve a mechanical injection system, the Commissioner will take into account the individual circumstances of each facility, including local fire and safety codes, to ensure that the cost of acquiring and maintaining the appropriate levels of security are reasonable for that facility.

(4) *Mechanical injection system; duty of the operator of a mechanical injection system to maintain the system's security standards.* Each operator of a mechanical injection system must—

(i) Maintain a record for each seal, including its identifying number or code, the location of the seal, the date(s) on which the seal was issued and installed, and the reason for the installation;

(ii) Visually inspect each installed seal not less than once during every 24 hour period to ascertain that each seal and lock mechanism, if applicable, has not been physically altered;

(iii) Check the identifying number or code for each seal against the records maintained by the terminal operator no less frequently than once during each seven day period and record each inspection and verification;

(iv) Promptly notify the Commissioner if inspection of a seal reveals any inconsistency in the records pertaining to that seal, or if the seal has been damaged or removed (other than a removal authorized by the operator for testing or maintenance);

(v) Maintain a record of each seal that has been replaced to include the seal number or code, the date the seal was issued, the location of the seal, the date the seal was replaced, and the reason the seal was replaced;

(vi) Promptly destroy and replace seals that have been removed from the system;

(vii) Restrict access to unused seal inventory to individuals specifically designated by the operator and maintain a record of such individuals;

(viii) Maintain a record of each installation, inspection, and destruction described in this paragraph (d)(4), including the name of the individual who conducts the installation, inspection, or destruction;

(ix) Make available for the Commissioner's immediate inspection the seals and records described in this paragraph (d)(4); and

(x) Promptly notify the Commissioner if, and when, the dye injection system is placed out of service.

(5) *Mechanical injection system; revocation or suspension of approval.* The Commissioner may revoke or suspend its approval of a dye injection system if the Commissioner determines that the system does not meet the standards of paragraph (d)(2) of this section or if the operator of the system has not complied with the requirements of paragraph (d)(4) of this section.

(6) *Sales and entries.* For purposes of determining whether tax is imposed by section 4081 on a sale or entry of diesel fuel or kerosene, such fuel satisfies the dyeing requirements of this paragraph (d) only if the dye required by § 48.4082–1(b) is combined with the fuel before the sale or entry and the seller or enterer has in its records evidence (such as a certificate from the terminal operator providing the fuel) establishing that the dye was combined with the fuel by means of a mechanical injection system. Thus, for example, diesel fuel or kerosene that is entered into the United States by means of nonbulk transfer (such as a railroad car) does not satisfy the requirements of this paragraph (d) if the required dye and marker are combined with diesel fuel or kerosene after the diesel fuel or kerosene has been entered into the United States.

(7) *Cross reference.* For the penalty relating to mechanical dye injection systems, see section 6715A.

(e) and (e)(1) [Reserved]. For further guidance, see § 48.4082–1(e) and (e)(1).

(2) This section is applicable on October 24, 2005.

■ **Par. 4.** Section 48.4101–1 is amended by revising paragraph (h)(3)(iv) to read as follows:

§ 48.4101–1 Taxable fuel; registration.

* * * * *

(h) * * *

(3) * * *

(iv) [Reserved]. For further guidance, see § 48.4101–1T(h)(3)(iv).

* * * * *

■ **Par. 5.** Section 48.4101–1T is added to read as follows:

§ 48.4101–1T Taxable fuel; registration (temporary).

(a) through (h)(3)(iii) [Reserved]. For further guidance, see § 48.4101–1(a) through (h)(3)(iii).

(iv) *Retention of information.* In addition to any other requirement relating to the retention of records, the terminal operator must—

(A) Maintain the information described in § 48.4101–1(h)(3)(ii) at the terminal from which the removal occurred for at least 3 months after the removal to which it relates in the case of information relating to removals before January 1, 2006, and at least 12 months after the removal to which it relates in the case of information relating to removals after December 31, 2005; and

(B) Maintain the information described in § 48.4101–1(h)(3)(iii) at the terminal where the dye was received for at least 3 months after the receipt in the case of receipts before January 1, 2006, and at least 12 months after the receipt in the case of receipts after December 31, 2005.

(h)(3)(v) through (l) [Reserved] For further guidance see § 48.4101–1(h)(3)(v) through (l).

PART 602—OMB CONTROL NUMBERS UNDER THE PAPERWORK REDUCTION ACT

■ **Par. 6.** The authority citation for part 602 continues to read as follows:

Authority: 26 U.S.C. 7805.

■ **Par. 7.** In § 602.101, paragraph (b) is amended by adding entries in numerical order to the table to read as follows:

§ 602.101 OMB Control numbers.

* * * * *

(b) * * *

CFR part or section where identified and described	Current OMB control No.
* * * * *	
48.4082–1T	1545–1418
* * * * *	
48.4101–1T	1545–1418
* * * * *	

Cono R. Namorato,

Acting Deputy Commissioner for Services and Enforcement.

Approved: April 15, 2005.

Eric Solomon,

Acting Deputy Assistant Secretary of the Treasury.

[FR Doc. 05–8236 Filed 4–25–05; 8:45 am]

BILLING CODE 4830–01–P

DEPARTMENT OF HOMELAND SECURITY

Coast Guard

33 CFR Part 100

[CGD05–05–024]

RIN 1625–AA08

Special Local Regulations for Marine Events; Approaches to Annapolis Harbor, Spa Creek and Severn River, Annapolis, MD

AGENCY: Coast Guard, DHS.

ACTION: Notice of enforcement.

SUMMARY: The Coast Guard is implementing the special local regulations at 33 CFR 100.511 during the Annapolis Yacht Club boat parade, a marine event to be held May 8, 2005, on the waters of Spa Creek and the Severn River at Annapolis, Maryland. These special local regulations are necessary to control vessel traffic due to the confined nature of the waterway and expected vessel congestion during the event. The effect will be to restrict general navigation in the regulated area for the safety of event participants, spectators and vessels transiting the event area.

DATES: 33 CFR 100.511 will be enforced from 10:30 a.m. to 1 p.m. on May 8, 2005.

FOR FURTHER INFORMATION CONTACT: Ronald Houck, Marine Events Coordinator, Commander, Coast Guard Sector Baltimore, 2401 Hawkins Point Road, Baltimore, MD 21226–1971, and (410) 576–2674.

SUPPLEMENTARY INFORMATION: The Annapolis Yacht Club will sponsor a boat parade on the waters of Spa Creek and the Severn River at Annapolis, Maryland. The event will consist of approximately 60 boats traveling at slow speed along two separate parade routes in Annapolis Harbor. In order to ensure the safety of participants, spectators and transiting vessels, 33 CFR 100.511 will be enforced for the duration of the event. Under the provisions of 33 CFR 100.511, from 10:30 a.m. to 1 p.m. on May 8, 2005 vessels may not enter the regulated area without permission from the Coast Guard Patrol Commander. Spectator vessels may anchor outside the regulated area but may not block a navigable channel. Because these restrictions will be in effect for a limited period, they should not result in a significant disruption of maritime traffic.

In addition to this notice, the maritime community will be provided extensive advance notification via the Local Notice to Mariners, marine information broadcasts, and area newspapers, so mariners can adjust their plans accordingly.

Dated: April 11, 2005.

Ben R. Thomason, III,

Rear Admiral, U.S. Coast Guard, Acting Commander, Fifth Coast Guard District.

[FR Doc. 05–8260 Filed 4–25–05; 8:45 am]

BILLING CODE 4910–15–P

DEPARTMENT OF HOMELAND SECURITY

Coast Guard

33 CFR Part 100

[CGD05–05–023]

RIN 1625–AA08

Special Local Regulation for Marine Events; Severn River, College Creek, Weems Creek and Carr Creek, Annapolis, MD

AGENCY: Coast Guard, DHS.

ACTION: Temporary final rule.

SUMMARY: The Coast Guard is establishing temporary special local regulations during the ''U.S. Naval Academy crew races'', a marine event to be held on the waters of the Severn River at Annapolis, Maryland on May 8 and 29, 2005. These special local regulations are necessary to provide for the safety of life on navigable waters during the event. This action is intended to restrict vessel traffic on the Severn River during the event.

DATES: This rule is effective from 5 a.m. on May 8, 2005 to 8 a.m. on May 29, 2005.

ADDRESSES: Comments and material received from the public, as well as documents indicated in this preamble as being available in the docket, are part of docket CGD05–05–023 and are available for inspection or copying at Commander (oax), Fifth Coast Guard District, 431 Crawford Street, Portsmouth, Virginia 23704–5004, between 9 a.m. and 2 p.m., Monday through Friday, except Federal holidays.

FOR FURTHER INFORMATION CONTACT: Dennis Sens, Project Manager, Auxiliary and Recreational Boating Safety Branch, at (757) 398–6204.

SUPPLEMENTARY INFORMATION:

Regulatory Information

We did not publish a notice of proposed rulemaking (NPRM) for this regulation. Under 5 U.S.C. 553(b)(B), the Coast Guard finds that good cause exists for not publishing an NPRM. Publishing an NPRM would be impracticable and contrary to public interest because the event will take place before the comment period would end. For the safety concerns noted, it is in the public interest to have these regulations in effect during the event.

Under 5 U.S.C. 553(d)(3), the Coast Guard finds that good cause exists for making this rule effective less than 30 days after publication in the **Federal Register**. Delaying the effective date would be contrary to the public interest, since immediate action is needed to ensure the safety of the event participants, spectator craft and other vessels transiting the event area. However advance notifications will be made to affected waterway users via marine information broadcasts and area newspapers.

Background and Purpose

On May 8 and 29, 2005, the U.S. Naval Academy will host crew races on the waters of the Severn River at Annapolis, Maryland. The event will consist of intercollegiate crew rowing teams racing along a 2000 meter course on the waters of the Severn River. A

fleet of spectator vessels is expected to gather nearby to view the competition. Due to the need for vessel control during the event, vessel traffic will be temporarily restricted to provide for the safety of participants, spectators and transiting vessels.

Discussion of Rule

The Coast Guard is establishing temporary special local regulations on specified waters of the Severn River adjacent to the U.S. Naval Academy, Annapolis, Maryland. The regulated area includes a section of the Severn River from shoreline to shoreline, bounded to the northwest by the Route 50 fixed highway bridge and bounded to the southeast by a line drawn from the Naval Academy Light at latitude 38°58″39.5′ North, longitude 076°28′49″ West, thence to Greenbury Point at latitude 38°58′29″ North, longitude 076°27′16″ West. The temporary special local regulations will be enforced from 5 a.m. to 8 a.m. on May 8 and 29, 2005, and will restrict general navigation in the regulated area during the crew races. Except for persons or vessels authorized by the Coast Guard Patrol Commander, no person or vessel may enter or remain in the regulated area during the enforcement period.

Regulatory Evaluation

This rule is not a ''significant regulatory action'' under section 3(f) of Executive Order 12866, Regulatory Planning and Review, and does not require an assessment of potential costs and benefits under section 6(a)(3) of that Order. The Office of Management and Budget has not reviewed it under that Order. It is not ''significant'' under the regulatory policies and procedures of the Department of Homeland Security (DHS).

We expect the economic impact of this rule to be so minimal that a full Regulatory Evaluation under the regulatory policies and procedures of DHS is unnecessary. Although this regulation will prevent traffic from transiting a portion of the Severn River during the event, the effect of this regulation will not be significant due to the limited duration that the regulated area will be in effect and the extensive advance notifications that will be made to the maritime community via the Local Notice to Mariners, marine information broadcasts, and area newspapers, so mariners can adjust their plans accordingly. Additionally, the regulated area has been narrowly tailored to impose the least impact on general navigation yet provide the level of safety deemed necessary. Vessel traffic will be able to transit the regulated area when the Coast Guard Patrol Commander deems it is safe to do so.

Small Entities

Under the Regulatory Flexibility Act (5 U.S.C. 601–612), we have considered whether this rule would have a significant economic impact on a substantial number of small entities. The term ''small entities'' comprises small businesses, not-for-profit organizations that are independently owned and operated and are not dominant in their fields, and governmental jurisdictions with populations of less than 50,000.

The Coast Guard certifies under 5 U.S.C. 605(b) that this rule will not have a significant economic impact on a substantial number of small entities. This rule would affect the following entities, some of which might be small entities: the owners or operators of vessels intending to transit or anchor in a portion of the Severn River during the event.

This rule would not have a significant economic impact on a substantial number of small entities for the following reasons. This rule would be in effect for only a limited period. Vessel traffic will be able to transit the regulated area when the Coast Guard Patrol Commander deems it is safe to do so. Before the enforcement period, we will issue maritime advisories so mariners can adjust their plans accordingly.

If you think that your business, organization, or governmental jurisdiction qualifies as a small entity and that this rule would have a significant economic impact on it, please submit a comment (see **ADDRESSES**) explaining why you think it qualifies and how and to what degree this rule would economically affect it.

Assistance for Small Entities

Under section 213(a) of the Small Business Regulatory Enforcement Fairness Act of 1996 (Pub. L. 104–121), we want to assist small entities in understanding the rule so that they could better evaluate its effects on them and participate in the rulemaking process. If the rule would affect your small business, organization, or governmental jurisdiction and you have questions concerning its provisions or options for compliance, please contact the address listed under **ADDRESSES**. The Coast Guard will not retaliate against small entities that question or complain about this rule or any policy or action of the Coast Guard.

Small businesses may send comments on the actions of Federal employees who enforce, or otherwise determine compliance with, Federal regulations to the Small Business and Agriculture Regulatory Enforcement Ombudsman and the Regional Small Business Regulatory Fairness Boards. The Ombudsman evaluates these actions annually and rates each agency's responsiveness to small business. If you wish to comment on actions by employees of the Coast Guard, call 1–888–REG–FAIR (1–888–734–3247).

Collection of Information

This rule calls for no new collection of information under the Paperwork Reduction Act of 1995 (44 U.S.C. 3501–3520).

Federalism

A rule has implications for federalism under Executive Order 13132, Federalism, if it has a substantial direct effect on State or local governments and would either preempt State law or impose a substantial direct cost of compliance on them. We have analyzed this rule under that Order and have determined that it does not have implications for federalism.

Unfunded Mandates Reform Act

The Unfunded Mandates Reform Act of 1995 (2 U.S.C. 1531–1538) requires Federal agencies to assess the effects of their discretionary regulatory actions. In particular, the Act addresses actions that may result in the expenditure by a State, local, or tribal government, in the aggregate, or by the private sector of $100,000,000 or more in any one year. Though this rule will not result in such an expenditure, we do discuss the effects of this rule elsewhere in this preamble.

Taking of Private Property

This rule will not effect a taking of private property or otherwise have taking implications under Executive Order 12630, Governmental Actions and Interference with Constitutionally Protected Property Rights.

Civil Justice Reform

This rule meets applicable standards in sections 3(a) and 3(b)(2) of Executive Order 12988, Civil Justice Reform, to minimize litigation, eliminate ambiguity, and reduce burden.

Protection of Children

We have analyzed this rule under Executive Order 13045, Protection of Children from Environmental Health Risks and Safety Risks. This rule is not an economically significant rule and does not create an environmental risk to

health or risk to safety that may disproportionately affect children.

Indian Tribal Governments

This rule does not have tribal implications under Executive Order 13175, Consultation and Coordination with Indian Tribal Governments, because it does not have a substantial direct effect on one or more Indian tribes, on the relationship between the Federal Government and Indian tribes, or on the distribution of power and responsibilities between the Federal Government and Indian tribes.

Energy Effects

We have analyzed this rule under Executive Order 13211, Actions Concerning Regulations That Significantly Affect Energy Supply, Distribution, or Use. We have determined that it is not a ''significant energy action'' under that order because it is not a ''significant regulatory action'' under Executive Order 12866 and is not likely to have a significant adverse effect on the supply, distribution, or use of energy. The Administrator of the Office of Information and Regulatory Affairs has not designated it as a significant energy action. Therefore, it does not require a Statement of Energy Effects under Executive Order 13211.

Technical Standards

The National Technology Transfer and Advancement Act (NTTAA) (15 U.S.C. 272 note) directs agencies to use voluntary consensus standards in their regulatory activities unless the agency provides Congress, through the Office of Management and Budget, with an explanation of why using these standards would be inconsistent with applicable law or otherwise impractical. Voluntary consensus standards are technical standards (e.g., specifications of materials, performance, design, or operation; test methods; sampling procedures; and related management systems practices) that are developed or adopted by voluntary consensus standards bodies.

This rule does not use technical standards. Therefore, we did not consider the use of voluntary consensus standards.

Environment

We have analyzed this rule under Commandant Instruction M16475.lD, which guides the Coast Guard in complying with the National Environmental Policy Act of 1969 (NEPA) (42 U.S.C. 4321–4370f), and have concluded that there are no factors in this case that would limit the use of a categorical exclusion under section 2.B.2 of the Instruction. Therefore, this rule is categorically excluded, under figure 2–1, paragraph (34)(h), of the Instruction, from further environmental documentation. Special local regulations issued in conjunction with a regatta or marine parade permit are specifically excluded from further analysis and documentation under that section.

List of Subjects in 33 CFR Part 100

Marine safety, Navigation (water), Reporting and recordkeeping requirements, Waterways.

■ For the reasons discussed in the preamble, the Coast Guard amends 33 CFR part 100 as follows:

PART 100—SAFETY OF LIFE ON NAVIGABLE WATERS

■ 1. The authority citation for part 100 continues to read as follows:

Authority: 33 U.S.C. 1233; Department of Homeland Security Delegation No. 0170.1.

■ 2. Add temporary § 100.35–T05–023 to read as follows:

§ 100.35–T05–023, Severn River, College Creek, Weems Creek and Carr Creek, Annapolis, MD.

(a) *Definitions.* (1) *Coast Guard Patrol Commander* means a commissioned, warrant, or petty officer of the Coast Guard who has been designated by the Commander, Coast Guard Sector Baltimore.

(2) *Official Patrol* means any vessel assigned or approved by the Commander, Coast Guard Sector Baltimore with a commissioned, warrant, or petty officer on board and displaying a Coast Guard ensign.

(3) *Participant* includes all vessels participating in the U.S. Naval Academy crew races under the auspices of the Marine Event Permit issued to the event sponsor and approved by the Commander, Coast Guard Sector Baltimore.

(b) *Regulated area.* The regulated area is established for the waters of the Severn River from shoreline to shoreline, bounded to the northwest by the Route 50 fixed highway bridge and bounded to the southeast by a line drawn from the Naval Academy Light at latitude 38°58′39.5″ North, longitude 076°28′49″ West, thence to Greenbury Point at latitude 38°58′29″ North, longitude 076°27′16″ West. All coordinates reference Datum: NAD 1983.

(c) *Special local regulations.* (1) Except for event participants and persons or vessels authorized by the Coast Guard Patrol Commander, no person or vessel may enter or remain in the regulated area.

(2) The operator of any vessel in the regulated area must:

(i) Stop the vessel immediately when directed to do so by any Official Patrol.

(ii) Proceed as directed by any Official Patrol.

(iii) Unless otherwise directed by the Official Patrol, operate at a minimum wake speed not to exceed six (6) knots.

(c) *Enforcement period.* This section will be enforced from 5 a.m. to 8 a.m. on May 8 and 29, 2005.

Dated: April 11, 2005.

Ben R. Thomason, III,

Captain, U.S. Coast Guard, Acting Commander, Fifth Coast Guard District.

[FR Doc. 05–8261 Filed 4–25–05; 8:45 am]

BILLING CODE 4910–15–P

ENVIRONMENTAL PROTECTION AGENCY

40 CFR Part 52

[RME–OAR–2005–MD–0002; FRL–7904–2]

Approval and Promulgation of Air Quality Implementation Plans; Maryland; Clarification of Visible Emissions Exception Provisions

AGENCY: Environmental Protection Agency (EPA).

ACTION: Direct final rule.

SUMMARY: EPA is taking direct final action to approve revisions to the Maryland State Implementation Plan (SIP). The revision consists of clarifications to the exception provisions of the Maryland visible emissions regulations. EPA is approving these revisions to the Maryland regulations in accordance with the requirements of the Clean Air Act.

DATES: This rule is effective on June 27, 2005 without further notice, unless EPA receives adverse written comment by May 26, 2005. If EPA receives such comments, it will publish a timely withdrawal of the direct final rule in the **Federal Register** and inform the public that the rule will not take effect.

ADDRESSES: Submit your comments, identified by Regional Material in EDocket (RME) ID Number RME–OAR–2005–MD–0002 by one of the following methods:

A. *Federal eRulemaking Portal: http://www.regulations.gov.* Follow the on-line instructions for submitting comments.

B. *Agency Web Site: http://www.docket.epa.gov/rmepub/* RME, EPA's electronic public docket and comment system, is EPA's preferred

method for receiving comments. Follow the on-line instructions for submitting comments.

C. *E-mail: morris.makeba@epa.gov*.

D. *Mail:* RME–OAR–2005–MD–0002, Makeba Morris, Chief, Air Quality Planning Branch, Mailcode 3AP21, U.S. Environmental Protection Agency, Region III, 1650 Arch Street, Philadelphia, Pennsylvania 19103.

E. *Hand Delivery:* At the previously-listed EPA Region III address. Such deliveries are only accepted during the Docket's normal hours of operation, and special arrangements should be made for deliveries of boxed information.

Instructions: Direct your comments to RME ID No. RME–OAR–2005–MD–0002. EPA's policy is that all comments received will be included in the public docket without change, and may be made available online at *http://www.docket.epa.gov/rmepub/*, including any personal information provided, unless the comment includes information claimed to be Confidential Business Information (CBI) or other information whose disclosure is restricted by statute. Do not submit information that you consider to be CBI or otherwise protected through RME, regulations.gov or e-mail. The EPA RME and the Federal regulations.gov Web sites are an ''anonymous access'' system, which means EPA will not know your identity or contact information unless you provide it in the body of your comment. If you send an e-mail comment directly to EPA without going through RME or regulations.gov, your e-mail address will be automatically captured and included as part of the comment that is placed in the public docket and made available on the Internet. If you submit an electronic comment, EPA recommends that you include your name and other contact information in the body of your comment and with any disk or CD–ROM you submit. If EPA cannot read your comment due to technical difficulties and cannot contact you for clarification, EPA may not be able to consider your comment. Electronic files should avoid the use of special characters, any form of encryption, and be free of any defects or viruses.

Docket: All documents in the electronic docket are listed in the RME index at *http://www.docket.epa.gov/rmepub/*. Although listed in the index, some information is not publicly available, *i.e.*, CBI or other information whose disclosure is restricted by statute. Certain other material, such as copyrighted material, is not placed on the Internet and will be publicly available only in hard copy form. Publicly available docket materials are available either electronically in RME or in hard copy during normal business hours at the Air Protection Division, U.S. Environmental Protection Agency, Region III, 1650 Arch Street, Philadelphia, Pennsylvania 19103. Copies of material to be incorporated by reference are available at the Air and Radiation Docket and Information Center, U.S. Environmental Protection Agency, 1301 Constitution Avenue, NW., Room B108, Washington, DC 20460. Copies of the State submittal are available at the Maryland Department of the Environment, 1800 Washington Boulevard, Suite 705, Baltimore, Maryland 21230.

FOR FURTHER INFORMATION CONTACT: Linda Miller, (215) 814–2068, or by e-mail at *miller.linda@epa.gov*.

SUPPLEMENTARY INFORMATION:

I. Background

The Maryland Department of the Environment (MDE) submitted a revision to the State Implementation Plan (SIP) on December 1, 2003. The revision consists of clarifications to the general visible emissions (VE) regulations and those related to specific source categories. The regulations affected by these revisions are found in Code of Maryland Regulations—COMAR 26.11.06 General Emission Standards, Prohibitions and Restrictions; COMAR 26.11.08 Control of Incinerators; COMAR 26.11.09 Control of Fuel Burning Equipment Stationary Internal Combustion Engines and Certain Fuel Burning Installations; and COMAR 26.11.10 Control of Iron and Steel Production Installations. Each of these regulations has previously been incorporated into the Maryland State Implementation Plan.

II. Summary of SIP Revision

This revision clarifies the intent of the VE exceptions provisions in the Maryland regulation as they relate generally and to specific source categories. The revised language will ensure that sources correctly interpret the exception provisions. The purpose of the existing regulation, which is presently included in the SIP, is to allow for a 6-minute per hour exclusion during certain activities such as load changes, adjustments and soot-blowing of boilers. The revised regulations clarify that this exception should not be applied for every hour of operation, but only during the hour in which the activity mentioned above occurs. In addition, the revised language clarifies that only periods of visible emissions less than 40 percent may qualify for the exception and that the 6-minute period is any consecutive 6-minute period during the hour in which the VE is recorded. The revisions include the addition this clarifying language to:

1. COMAR 26.11.06.02 Control of Visible emissions in the General Emission Standards.
2. COMAR 26.11.08.04 Control Visible emissions for Incinerators.
3. COMAR 26.11.09.05 Control of Visible Emissions for fuel burning equipment.
4. COMAR 26.11.10.03 Control of Visible emissions for Iron and Steel Production Installations.

III. Final Action

EPA is approving revisions the Maryland VE exceptions provisions. EPA is publishing this rule without prior proposal because the Agency views this as a noncontroversial amendment and anticipates no adverse comment. This revision is a clarification to an existing requirement. However, in the ''Proposed Rules'' section of today's **Federal Register**, EPA is publishing a separate document that will serve as the proposal to approve the SIP revision if adverse comments are filed. This rule will be effective on June 27, 2005 without further notice unless EPA receives adverse comment by May 26, 2005. If EPA receives adverse comment, EPA will publish a timely withdrawal in the **Federal Register** informing the public that the rule will not take effect. EPA will address all public comments in a subsequent final rule based on the proposed rule. EPA will not institute a second comment period on this action. Any parties interested in commenting must do so at this time. Please note that if EPA receives adverse comment on an amendment, paragraph, or section of this rule and if that provision may be severed from the remainder of the rule, EPA may adopt as final those provisions of the rule that are not the subject of an adverse comment.

IV. Statutory and Executive Order Reviews

A. General Requirements

Under Executive Order 12866 (58 FR 51735, October 4, 1993), this action is not a ''significant regulatory action'' and therefore is not subject to review by the Office of Management and Budget. For this reason, this action is also not subject to Executive Order 13211, ''Actions Concerning Regulations That Significantly Affect Energy Supply, Distribution, or Use'' (66 FR 28355, May 22, 2001). This action merely approves state law as meeting Federal requirements and imposes no additional requirements beyond those imposed by

state law. Accordingly, the Administrator certifies that this rule will not have a significant economic impact on a substantial number of small entities under the Regulatory Flexibility Act (5 U.S.C. 601 *et seq.*). Because this rule approves pre-existing requirements under state law and does not impose any additional enforceable duty beyond that required by state law, it does not contain any unfunded mandate or significantly or uniquely affect small governments, as described in the Unfunded Mandates Reform Act of 1995 (Public Law 104–4). This rule also does not have tribal implications because it will not have a substantial direct effect on one or more Indian tribes, on the relationship between the Federal Government and Indian tribes, or on the distribution of power and responsibilities between the Federal Government and Indian tribes, as specified by Executive Order 13175 (65 FR 67249, November 9, 2000). This action also does not have Federalism implications because it does not have substantial direct effects on the States, on the relationship between the national government and the States, or on the distribution of power and responsibilities among the various levels of government, as specified in Executive Order 13132 (64 FR 43255, August 10, 1999). This action merely approves a state rule implementing a Federal standard, and does not alter the relationship or the distribution of power and responsibilities established in the Clean Air Act. This rule also is not subject to Executive Order 13045 ''Protection of Children from Environmental Health Risks and Safety Risks'' (62 FR 19885, April 23, 1997), because it is not economically significant.

In reviewing SIP submissions, EPA's role is to approve state choices, provided that they meet the criteria of the Clean Air Act. In this context, in the absence of a prior existing requirement for the State to use voluntary consensus standards (VCS), EPA has no authority to disapprove a SIP submission for failure to use VCS. It would thus be inconsistent with applicable law for EPA, when it reviews a SIP submission, to use VCS in place of a SIP submission that otherwise satisfies the provisions of the Clean Air Act. Thus, the requirements of section 12(d) of the National Technology Transfer and Advancement Act of 1995 (15 U.S.C. 272 note) do not apply. This rule does not impose an information collection burden under the provisions of the Paperwork Reduction Act of 1995 (44 U.S.C. 3501 *et seq.*).

B. Submission to Congress and the Comptroller General

The Congressional Review Act, 5 U.S.C. 801 *et seq.*, as added by the Small Business Regulatory Enforcement Fairness Act of 1996, generally provides that before a rule may take effect, the agency promulgating the rule must submit a rule report, which includes a copy of the rule, to each House of the Congress and to the Comptroller General of the United States. EPA will submit a report containing this rule and other required information to the U.S. Senate, the U.S. House of Representatives, and the Comptroller General of the United States prior to publication of the rule in the **Federal Register**. This rule to approve clarifications to the visible emissions exception language is not a ''major rule'' as defined by 5 U.S.C. 804(2).

C. Petitions for Judicial Review

Under section 307(b)(1) of the Clean Air Act, petitions for judicial review of this action must be filed in the United States Court of Appeals for the appropriate circuit by June 27, 2005. Filing a petition for reconsideration by the Administrator of this final rule does not affect the finality of this rule for the purposes of judicial review nor does it extend the time within which a petition for judicial review may be filed, and shall not postpone the effectiveness of such rule or action. This action, to approve revisions to the Maryland regulations which clarify the visible emissions exception provisions, may not be challenged later in proceedings to enforce its requirements. (See section 307(b)(2).)

List of Subjects in 40 CFR Part 52

Environmental protection, Air pollution control, Particulate matter, Reporting and recordkeeping requirements.

Dated: April 19, 2005.

Richard J. Kampf,

Acting Regional Administrator, Region III.

■ 40 CFR part 52 is amended as follows:

PART 52—[AMENDED]

■ 1. The authority citation for part 52 continues to read as follows:

Authority: 42 U.S.C. 7401 *et seq.*

Subpart V—Maryland

■ 2. In § 52.1070, the table in paragraph (c) is amended by revising the entries for COMAR 26.11.06.02, 10.18.08 (Title), 10.18.08.04, 26.11.09.05, and 26.11.10.03 to read as follows:

§ 52.1070 Identification of plan.

* * * * *

(c) *EPA approved regulations.*

EPA-APPROVED REGULATIONS IN THE MARYLAND SIP

Code of Maryland administrative regulations (COMAR) citation	Title/subject	State effective date	EPA approval date	Additional explanation/citation at 40 CFR 52.1100
* * *	*	*	* *	*
26.11.06		**General Emission Standards, Prohibitions, and Restrictions**		
* * *	*	*	* *	*
26.11.06.02 [*Except:* .02A(1)(e), (1)(g), (1)(h), (1)(i)]	Visible Emissions	11/24/03	4/26/05 [Insert page number where the document begins]	Revised paragraph 26.11.02.02A(2).
* * *	*	*	* *	*
10.18.08/26.11.08			**Control of Incinerators**	
* * *	*	*	* *	*

EPA-APPROVED REGULATIONS IN THE MARYLAND SIP—Continued

Code of Maryland administrative regulations (COMAR) citation	Title/subject	State effective date	EPA approval date	Additional explanation/citation at 40 CFR 52.1100
10.18.08.04/26.11.08.04	Visible Emissions	11/24/03	4/26/05 [Insert page number where the document begins]	Revised COMAR citation; revised paragraph 26.11.08.04C.
* *	*	*	* *	*
26.11.09	**Control of Fuel-Burning Equipment, Stationary Internal Combustion Engines, and Certain Fuel-Burning Installations**			
* *	*	*	* *	*
26.11.09.05	Visible Emissions	11/24/03	4/26/05 [Insert page number where the document begins]	Revised paragraph 26.11.09.05A(3).
* *	*	*	* *	*
26.11.10		**Control of Iron and Steel Production Installations**		
* *	*	*	* *	*
26.11.10.03	Visible Emissions	11/24/03	4/26/05 [Insert page number where the document begins]	Revised paragraph 26.11.10.03A(2)
* *	*	*	* *	*

[FR Doc. 05–8317 Filed 4–25–05; 8:45 am]

BILLING CODE 6560–50–P

DEPARTMENT OF COMMERCE

National Oceanic and Atmospheric Administration

50 CFR Part 648

[Docket No. 041221358–5065–02; I.D. 042005B]

Fisheries of the Northeastern United States; Atlantic Mackerel, Squid, and Butterfish Fisheries; Closure of the Quarter II Fishery for Loligo Squid

AGENCY: National Marine Fisheries Service (NMFS), National Oceanic and Atmospheric Administration (NOAA), Commerce.

ACTION: Closure.

SUMMARY: NMFS announces that the directed fishery for *Loligo* squid in the Exclusive Economic Zone (EEZ) will be closed effective 0001 hours, April 25, 2005. Vessels issued a Federal permit to harvest *Loligo* squid may not retain or land more than 2,500 lb (1,134 kg) of *Loligo* squid per trip for the remainder of the quarter (through June 30, 2005). This action is necessary to prevent the fishery from exceeding its Quarter II quota and to allow for effective management of this stock.

DATES: Effective 0001 hours, April 25, 2005, through 2400 hours, June 30, 2005.

FOR FURTHER INFORMATION CONTACT: Jason Blackburn, Fishery Management Specialist, 978–281–9326, Fax 978–281–9135.

SUPPLEMENTARY INFORMATION: Regulations governing the *Loligo* squid fishery are found at 50 CFR part 648. The regulations require specifications for maximum sustainable yield, initial optimum yield, allowable biological catch, domestic annual harvest (DAH), domestic annual processing, joint venture processing, and total allowable levels of foreign fishing for the species managed under the Atlantic Mackerel, Squid, and Butterfish Fishery Management Plan. The procedures for setting the annual initial specifications are described in § 648.21.

The final rule for the 2005 annual specifications published on March 21, 2005 (70 FR 13406). The 2005 annual quota for *Loligo* squid is 16,744.9 mt. This amount is allocated by quarter, as shown below.

TABLE 1.—*Loligo* SQUID QUARTERLY ALLOCATIONS

Quarter	Percent	Metric Tons[1]	Research Set-aside
I (Jan-Mar)	33.23	5,564.3	N/A.
II(Apr-Jun)	17.61	2,948.8	N/A.
III(Jul-Sep)	17.3	2,896.9	N/A.
IV (Oct-Dec)	31.86	5,334.9	N/A.
Total	100	16,744.9	255.1.

[1]Quarterly allocations after 255.1–mt research set-aside deduction.

Section 648.22 requires NMFS to close the directed *Loligo* squid fishery in the EEZ when 80 percent of the quarterly allocation is harvested in Quarters I, II, and III, and when 95 percent of the total annual DAH has been harvested. NMFS is further required to notify, in advance of the closure, the Executive Directors of the Mid-Atlantic, New England, and South Atlantic Fishery Management Councils; mail notification of the closure to all

holders of *Loligo* squid permits at least 72 hours before the effective date of the closure; provide adequate notice of the closure to recreational participants in the fishery; and publish notification of the closure in the **Federal Register**. The Administrator, Northeast Region, NMFS, based on dealer reports and other available information, has determined that 80 percent of the DAH for *Loligo* squid in Quarter II will be harvested. Therefore, effective 0001 hours, April 25, 2005, the directed fishery for *Loligo* squid is closed and vessels issued Federal permits for Loligo squid may not retain or land more than 2,500 lb (1,134 kg) of *Loligo* during a calendar day. The directed fishery will reopen effective 0001 hours, July 1, 2005, when the Quarter III quota becomes available.

Classification

This action is required by 50 CFR part 648 and is exempt from review under Executive Order 12866.

Authority: 16 U.S.C. 1801 *et seq.*

Dated: April 20, 2005.

Alan D. Risenhoover,

Acting Director, Office of Sustainable Fisheries, National Marine Fisheries Service.

[FR Doc. 05–8310 Filed 4–21–05; 2:50 pm]

BILLING CODE 3510–22–S

DEPARTMENT OF COMMERCE

National Oceanic and Atmospheric Administration

50 CFR Part 679

[Docket No. 041126332–5039–02; I.D. 042105B]

Fisheries of the Exclusive Economic Zone Off Alaska; Species in the Rock Sole/Flathead Sole/''Other Flatfish'' Fishery Category by Vessels Using Trawl Gear in Bering Sea and Aleutian Islands Management Area

AGENCY: National Marine Fisheries Service (NMFS), National Oceanic and Atmospheric Administration (NOAA), Commerce.

ACTION: Closure.

SUMMARY: NMFS is closing directed fishing for species in the rock sole/flathead sole/''other flatfish'' fishery category by vessels using trawl gear in the Bering Sea and Aleutian Islands management area (BSAI). This action is necessary to prevent exceeding the second seasonal apportionment of the 2005 halibut bycatch allowance specified for the trawl rock sole/flathead sole/''other flatfish'' fishery category in the BSAI.

DATES: Effective 1200 hrs, Alaska local time (A.l.t.), April 22, 2005, through 1200 hrs, A.l.t., July 5, 2005.

FOR FURTHER INFORMATION CONTACT: Josh Keaton, 907–586–7228.

SUPPLEMENTARY INFORMATION: NMFS manages the groundfish fishery in the BSAI according to the Fishery Management Plan for Groundfish of the Bering Sea and Aleutian Islands Management Area (FMP) prepared by the North Pacific Fishery Management Council under authority of the Magnuson-Stevens Fishery Conservation and Management Act. Regulations governing fishing by U.S. vessels in accordance with the FMP appear at subpart H of 50 CFR part 600 and 50 CFR part 679.

The second seasonal apportionment of the 2005 halibut bycatch allowance specified for the trawl rock sole/flathead sole/''other flatfish'' fishery category in the BSAI, for the period April 1, 2005 through July 5, 2005, is 164 metric tons as established by the 2005 and 2006 final harvest specifications for groundfish in the BSAI (70 FR 8979, February 24, 2005).

In accordance with § 679.21(e)(7)(v), the Administrator, Alaska Region, NMFS, has determined that the amount of the second seasonal apportionment of the 2005 halibut bycatch allowance specified for the trawl rock sole/flathead sole/''other flatfish'' fishery category in the BSAI has been caught. Consequently, NMFS is closing directed fishing for species in the rock sole/flathead sole/''other flatfish'' fishery category by vessels using trawl gear in the BSAI.

After the effective date of this closure the maximum retainable amounts at §§ 679.20(e) and (f) apply at any time during a trip.

Classification

This action responds to the best available information recently obtained from the fishery. The Assistant Administrator for Fisheries, NOAA (AA), finds good cause to waive the requirement to provide prior notice and opportunity for public comment pursuant to the authority set forth at 5 U.S.C. 553(b)(B) as such requirement is impracticable and contrary to the public interest. This requirement is impracticable and contrary to the public interest as it would prevent NMFS from responding to the most recent fisheries data in a timely fashion and would delay the closure of directed fishing for species in the rock sole/flathead sole/''other flatfish'' fishery category by vessels using trawl gear in the BSAI.

The AA also finds good cause to waive the 30-day delay in the effective date of this action under 5 U.S.C. 553(d)(3). This finding is based upon the reasons provided above for waiver of prior notice and opportunity for public comment.

This action is required by § 679.21 and is exempt from review under Executive Order 12866.

Authority: 16 U.S.C. 1801 *et seq.*

Dated: April 21, 2005.

Alan D. Risenhoover

Acting Director, Office of Sustainable Fisheries, National Marine Fisheries Service.

[FR Doc. 05–8309 Filed 4–21–05; 2:50 pm]

BILLING CODE 3510–22–S

Proposed Rules

Federal Register
Vol. 70, No. 79
Tuesday, April 26, 2005

This section of the FEDERAL REGISTER contains notices to the public of the proposed issuance of rules and regulations. The purpose of these notices is to give interested persons an opportunity to participate in the rule making prior to the adoption of the final rules.

DEPARTMENT OF AGRICULTURE

Agricultural Marketing Service

7 CFR Part 28

[CN–05–001]

RIN 0581–AC43

Revision of User Fees for 2005 Crop Cotton Classification Services to Growers

AGENCY: Agricultural Marketing Service, USDA.

ACTION: Proposed rule.

SUMMARY: The Agricultural Marketing Service (AMS) is proposing to raise user fees for cotton producers for 2005 crop cotton classification services under the Cotton Statistics and Estimates Act. The 2004 user fee for this classification service was $1.65 per bale. This proposal would raise the fee for the 2005 crop to $1.85 per bale with the program. The proposed fee and the existing reserve are sufficient to cover the costs of providing classification services, including costs for administration and supervision.

DATES: Comments must be received on or before May 11, 2005.

ADDRESSES: Interested persons are invited to submit written comments concerning this proposed rule to Darryl Earnest, Acting Deputy Administrator, Cotton Program, AMS, USDA, STOP 0224, 1400 Independence Avenue, SW., Washington, DC 20250–0224. Comments should be submitted in triplicate. Comments may also be submitted electronically to: *cottoncomments@usda.gov*. All comments should reference the docket number and the date and the page of this issue of the **Federal Register**. All comments received will be available for public inspection during regular business hours at the above office in Rm. 2641-South Building, 1400 Independence Avenue, SW., Washington, DC. A copy of this notice may be found at: *http://www.ams.usda.gov/cotton/rulemaking.htm*.

FOR FURTHER INFORMATION CONTACT: Darryl Earnest, Acting Deputy Administrator, Cotton Program, AMS, USDA, Room 2641–S, STOP 0224, 1400 Independence Avenue, SW., Washington, DC 20250–0224. Telephone (202) 720–2145, facsimile (202) 690–1718, or e-mail *darryl.earnest@usda.gov*.

SUPPLEMENTARY INFORMATION:

Executive Order 12866

This proposed rule has been determined to be not significant for purposes of Executive Order 12866; and, therefore has not been reviewed by the Office of Management and Budget (OMB).

Executive Order 12988

This proposed rule has been reviewed under Executive Order 12988, Civil Justice Reform. It is not intended to have retroactive effect. This rule would not preempt any state or local laws, regulations, or policies unless they present an irreconcilable conflict with this rule. There are no administrative procedures that must be exhausted prior to any judicial challenge to the provisions of this rule.

Regulatory Flexibility Act

Pursuant to requirements set forth in the Regulatory Flexibility Act (RFA) (5 U.S.C. 601 *et seq.*) AMS has considered the economic impact of this action on small entities and has determined that its implementation will not have a significant economic impact on a substantial number of small businesses.

The purpose of the RFA is to fit regulatory actions to the scale of businesses subject to such actions so that small businesses will not be disproportionately burdened. There are an estimated 35,000 cotton growers in the U.S. who voluntarily use the AMS cotton classing services annually, and the majority of these cotton growers are small businesses under the criteria established by the Small Business Administration (13 CFR 121.201). The increase above the 2004 crop level as stated will not significantly affect small businesses as defined in the RFA because:

(1) The fee represents a very small portion of the cost-per-unit (less than 0.4 cents per lb) currently borne by those entities utilizing the services. (The 2004 user fee for classification services was $1.65 per 500 pound bale; the fee for the 2005 crop would be increased to $1.85 per 500 pound bale; the 2005 crop is estimated at 18,750,000 bales).

(2) The fee for services will not affect competition in the marketplace; and

(3) The use of classification services is voluntary. For the 2004 crop, 22,815,000 bales were produced. Almost all of these bales were voluntarily submitted by growers for the classification service.

(4) Based on the average price paid to growers for cotton from the 2003 crop of 61.8 cents per pound, 500 pound bales of cotton are worth an average of $309 each. The proposed user fee for classification services, $1.85 per bale, is less than one percent of the value of an average bale of cotton.

Paperwork Reduction Act

In compliance with OMB regulations (5 CFR part 1320), which implement the Paperwork Reduction Act (PRA) (44 U.S.C. 3501 *et seq.*), the information collection requirements contained in the provisions to be amended by this proposed rule have been previously approved by OMB and were assigned OMB control number 0581-AC34.

It is anticipated that the proposed changes, if adopted, would be made effective July 1, 2005, as provided by the Cotton Statistics and Estimates Act.

Fees for Classification Under the Cotton Statistics and Estimates Act of 1927

The user fee charged to cotton producers for High Volume Instrument (HVI) classification services under the Cotton Statistics and Estimates Act (7 U.S.C. 473a) was $1.65 per bale during the 2004 harvest season, as determined by using the formula provided in the Uniform Cotton Classing Fees Act of 1987, as amended by Public Law 102–237. The fees cover salaries, costs of equipment and supplies, and other overhead costs, including costs for administration, and supervision.

This proposed rule establishes the user fee charged to producers for HVI classification at $1.85 per bale during the 2005 harvest season.

Public Law 102–237 amended the formula in the Uniform Cotton Classing Fees Act of 1987 for establishing the producer's classification fee so that the producer's fee is based on the prevailing method of classification requested by producers during the previous year. HVI

classing was the prevailing method of cotton classification requested by producers in 2004. Therefore, the 2005 producer's user fee for classification service is based on the 2004 base fee for HVI classification.

The fee was calculated by applying the formula specified in the Uniform Cotton Classing Fees Act of 1987, as amended by Pub. L. 102–237. The 2004 base fee for HVI classification exclusive of adjustments, as provided by the Act, was $2.32 per bale. An increase of 2.51 percent, or 5 cents per bale, due to the implicit price deflator of the gross domestic product added to the $2.32 would result in a 2005 base fee of $2.37 per bale. The formula in the Act provides for the use of the percentage change in the implicit price deflator of the gross national product (as indexed for the most recent 12-month period for which statistics are available). However, gross *national* product has been replaced by gross *domestic* product by the Department of Commerce as a more appropriate measure for the short-term monitoring and analysis of the U.S. economy.

The number of bales to be classed by the United States Department of Agriculture from the 2005 crop is estimated at 18,096,563 bales. The 2005 base fee was decreased 15 percent based on the estimated number of bales to be classed (1 percent for every 100,000 bales or portion thereof above the base of 12,500,000, limited to a maximum decreased adjustment of 15 percent). This percentage factor amounts to a 35 cents per bale reduction and was subtracted from the 2005 base fee of $2.37 per bale, resulting in a fee of $2.02 per bale.

However, a fee of $2.02 per bale, the projected operating reserve would be 32.45 percent. The Act specifies that the Secretary shall not establish a fee which, when combined with other sources of revenue, will result in a projected operating reserve of more than 25 percent. Accordingly, the fee of $2.02 was required to be reduced by 17 cents per bale, to $1.85 per bale, to provide an ending accumulated operating reserve for the fiscal year of not more than 25 percent of the projected cost of operating the program. This would establish the proposal 2005 season fee at $1.85 per bale.

Accordingly, under the proposed rule § 28.909, paragraph (b) would be revised to reflect the increase of the HVI classification fee from $1.65 to $1.85 per bale.

As provided for in the Uniform Cotton Classing Fees Act of 1987, as amended, a 5 cent per bale discount would continue to be applied to voluntary centralized billing and collecting agents as specified in § 28.909 (c).

Growers or their designated agents receiving classification data would continue to incur no additional fees if classification data is requested only once. The fee for each additional retrieval of classification data in § 28.910 would remain at 5 cents per bale. The fee in § 28.910 (b) for an owner receiving classification data from the National database would remain at 5 cents per bale, and the minimum charge of $5.00 for services provided per monthly billing period would remain the same. The provisions of § 28.910 (c) concerning the fee for new classification memoranda issued from the National database for the business convenience of an owner without reclassification of the cotton will remain the same at 15 cents per bale or a minimum of $5.00 per sheet.

The fee for review classification in § 28.911 would be increased from $1.65 to $1.85 per bale.

The fee for returning samples after classification in § 28.911 would remain at 40 cents per sample.

A 15-day comment period is provided for public comments. This period is appropriate because it is anticipated that the proposed changes, if adopted, would be made effective July 1, 2005, as provided by the Cotton Statistics and Estimates Act.

List of Subjects in 7 CFR Part 28

Administrative practice and procedure, Cotton, Cotton samples, Grades, Market news, Reporting and record keeping requirements, Standards, Staples, Testing, Warehouses.

For the reasons set forth in the preamble, 7 CFR part 28 is proposed to be amended as follows:

PART 28—[AMENDED]

1. The authority citation for 7 CFR part 28, Subpart D, continues to read as follows:

Authority: 7 U.S.C. 471–476.

2. In § 28.909, paragraph (b) is revised to read as follows:

§ 28.909 Costs.

* * * * *

(b) The cost of High Volume Instrument (HVI) cotton classification service to producers is $1.85 per bale.

* * * * *

3. In § 28.911, the last sentence of paragraph (a) is revised to read as follows:

§ 28.911 Review classification.

(a) * * * The fee for review classification is $1.85 per bale.

* * * * *

Dated: April 22, 2005.

Kenneth C. Clayton,

Acting Administrator, Agricultural Marketing Service.

[FR Doc. 05–8373 Filed 4–25–05; 8:45 am]

BILLING CODE 3410–02–P

DEPARTMENT OF TRANSPORTATION

Federal Aviation Administration

14 CFR Part 25

[Policy Statement No. ANM–115–05–14]

Acceptable Methods of Compliance With § 25.562(c)(5) for Front Row Passenger Seats

AGENCY: Federal Aviation Administration (FAA), DOT.

ACTION: Notice of proposed policy; request for comments.

SUMMARY: The Federal Aviation Administration (FAA) announces the availability of proposed policy on Acceptable Methods of Compliance with Title 14 Code of Federal Regulations (CFR) 25.562(c)(5) for Front Row Passenger Seats.

DATES: Send your comments on or before May 26, 2005.

ADDRESSES: Address your comments to the individual identified under **FOR FURTHER INFORMATION CONTACT.**

FOR FURTHER INFORMATION CONTACT: John Piccola, Federal Aviation Administration, Transport Airplane Directorate, Transport Standards Staff, Standardization Branch, ANM–113, 1601 Lind Avenue, SW., Renton, WA 98055–4056; telephone (425) 227–1509; fax (425) 227–1320; e-mail: *John.Piccola@faa.gov.*

SUPPLEMENTARY INFORMATION:

Comments Invited

The proposed policy is available on the Internet at the following address: *http://www.airweb.faa.gov/rgl.* If you do not have access to the Internet, you can obtain a copy of the policy by contacting the person listed under **FOR FURTHER INFORMATION CONTACT.**

The FAA invites your comments on this proposed policy. We will accept your comments, data, views, or arguments by letter, fax, or e-mail. Send your comments to the person indicated in **FOR FURTHER INFORMATION CONTACT.** Mark your comments, ''Comments to Policy Statement No. ANM–115–05–14.''

Use the following format when preparing your comments:

- Organize your comments issue-by-issue.
- For each issue, state what specific change you are requesting to the proposed policy.
- Include justification, reasons, or data for each change you are requesting.

We also welcome comments in support of the proposed policy

We will consider all communications received on or before the closing date for comments. We may change the proposed policy because of the comments received.

Background

The purpose of the proposed policy memorandum is to clarify FAA certification policy of the acceptable substantiation methods used to provide protection under § 25.562(a) when meeting the performance standards in § 25.562(c) for ''front row'' seats. Front row seats are those seats which are located directly aft of a partition, monument, or other commodity, including all passenger seats not considered ''row-to-row.'' The policy is not directed toward other seats. The FAA has determined that the proposed policy provides an acceptable means of protection for front row occupants.

Issued in Renton, Washington, on March 25, 2005.

Ali Bahrami,

Manager, Transport Airplane Directorate, Aircraft Certification Service.

[FR Doc. 05–8136 Filed 4–25–05; 8:45 am]

BILLING CODE 4910–13–M

DEPARTMENT OF TRANSPORTATION

Federal Aviation Administration

14 CFR Part 39

[Docket No. FAA–2005–21053; Directorate Identifier 2005–NM–053–AD]

RIN 2120–AA64

Airworthiness Directives; Dornier Model 328–100 Series Airplanes

AGENCY: Federal Aviation Administration (FAA), Department of Transportation (DOT).

ACTION: Notice of proposed rulemaking (NPRM).

SUMMARY: The FAA proposes to adopt a new airworthiness directive (AD) for all Dornier Model 328–100 series airplanes. This proposed AD would require modifying the electrical wiring of the fuel pumps; installing insulation at the hand flow control and shut-off valves, and other components of the environmental control system; and installing markings at fuel wiring harnesses. This proposed AD also would require revising the Airworthiness Limitations section of the Instructions for Continued Airworthiness to incorporate new inspections of the fuel tank system. This proposed AD is prompted by the results of fuel system reviews conducted by the airplane manufacturer. We are proposing this AD to reduce the potential of ignition sources inside fuel tanks, which, in combination with flammable fuel vapors, could result in fuel tank explosions and consequent loss of the airplane.

DATES: We must receive comments on this proposed AD by May 26, 2005.

ADDRESSES: Use one of the following addresses to submit comments on this proposed AD.

- DOT Docket Web site: Go to *http://dms.dot.gov* and follow the instructions for sending your comments electronically.
- Government-wide rulemaking Web site: Go to *http://www.regulations.gov* and follow the instructions for sending your comments electronically.
- Mail: Docket Management Facility, U.S. Department of Transportation, 400 Seventh Street, SW., Nassif Building, room PL–401, Washington, DC 20590.
- By fax: (202) 493–2251.
- Hand Delivery: Room PL–401 on the plaza level of the Nassif Building, 400 Seventh Street, SW., Washington, DC, between 9 a.m. and 5 p.m., Monday through Friday, except Federal holidays.

For service information identified in this proposed AD, contact AvCraft Aerospace GmbH, P.O. Box 1103, D–82230 Wessling, Germany.

You can examine the contents of this AD docket on the Internet at *http://dms.dot.gov,* or in person at the Docket Management Facility, U.S. Department of Transportation, 400 Seventh Street, SW., room PL–401, on the plaza level of the Nassif Building, Washington DC. This docket number is FAA–2005–21053; the directorate identifier for this docket is 2005–NM–053–AD.

FOR FURTHER INFORMATION CONTACT: Dan Rodina, Aerospace Engineer, International Branch, ANM–116, FAA, Transport Airplane Directorate, 1601 Lind Avenue, SW., Renton, Washington 98055–4056; telephone (425) 227–2125; fax (425) 227–1149.

SUPPLEMENTARY INFORMATION:

Comments Invited

We invite you to submit any relevant written data, views, or arguments regarding this proposed AD. Send your comments to an address listed under **ADDRESSES.** Include ''Docket No. FAA–2005–21053; Directorate Identifier 2005–NM–053–AD'' at the beginning of your comments. We specifically invite comments on the overall regulatory, economic, environmental, and energy aspects of the proposed AD. We will consider all comments submitted by the closing date and may amend the proposed AD in light of those comments.

We will post all comments we receive, without change, to *http://dms.dot.gov,* including any personal information you provide. We will also post a report summarizing each substantive verbal contact with FAA personnel concerning this proposed AD. Using the search function of our docket Web site, anyone can find and read the comments in any of our dockets, including the name of the individual who sent the comment (or signed the comment on behalf of an association, business, labor union, etc.). You can review the DOT's complete Privacy Act Statement in the **Federal Register** published on April 11, 2000 (65 FR 19477–78), or you can visit *http://dms.dot.gov.*

Examining the Docket

You can examine the AD docket on the Internet at *http://dms.dot.gov,* or in person at the Docket Management Facility office between 9 a.m. and 5 p.m., Monday through Friday, except Federal holidays. The Docket Management Facility office (telephone (800) 647–5227) is located on the plaza level of the Nassif Building at the DOT street address stated in the **ADDRESSES** section. Comments will be available in the AD docket shortly after the DMS receives them.

Discussion

The FAA has examined the underlying safety issues involved in recent fuel tank explosions on several large transport airplanes, including the adequacy of existing regulations, the service history of airplanes subject to those regulations, and existing maintenance practices for fuel tank systems. As a result of those findings, we issued a regulation titled ''Transport Airplane Fuel Tank System Design Review, Flammability Reduction and Maintenance and Inspection Requirements'' (67 FR 23086, May 7, 2001). In addition to new airworthiness standards for transport airplanes and new maintenance requirements, this rule included Special Federal Aviation Regulation No. 88 (''SFAR 88,'' Amendment 21–78, and subsequent Amendments 21–82 and 21–83).

Among other actions, SFAR 88 requires certain type design (*i.e.*, type certificate (TC) and supplemental type certificate (STC)) holders to substantiate that their fuel tank systems can prevent ignition sources in the fuel tanks. This requirement applies to type design holders for large turbine-powered transport airplanes and for subsequent modifications to those airplanes. It requires them to perform design reviews and to develop design changes and maintenance procedures if their designs do not meet the new fuel tank safety standards. As explained in the preamble to the rule, we intended to adopt airworthiness directives to mandate any changes found necessary to address unsafe conditions identified as a result of these reviews.

In evaluating these design reviews, we have established four criteria intended to define the unsafe conditions associated with fuel tank systems that require corrective actions. The percentage of operating time during which fuel tanks are exposed to flammable conditions is one of these criteria. The other three criteria address the failure types under evaluation: Single failures, single failures in combination with another latent condition(s), and in-service failure experience. For all four criteria, the evaluations included consideration of previous actions taken that may mitigate the need for further action.

The Joint Aviation Authorities (JAA) has issued a regulation that is similar to SFAR 88. (The JAA is an associated body of the European Civil Aviation Conference (ECAC) representing the civil aviation regulatory authorities of a number of European States who have agreed to co-operate in developing and implementing common safety regulatory standards and procedures.) Under this regulation, the JAA stated that all members of the ECAC that hold type certificates for transport category airplanes are required to conduct a design review against explosion risks.

We have determined that the actions identified in this AD are necessary to reduce the potential of ignition sources inside fuel tanks, which, in combination with flammable fuel vapors, could result in fuel tank explosions and consequent loss of the airplane.

In light of these findings, the Luftfahrt-Bundesamt (LBA), which is the airworthiness authority for Germany, issued German airworthiness directive D–2005–001, dated January 26, 2005, to address the unsafe condition previously described on Dornier Model 328–100 series airplanes.

Relevant Service Information

The airplane manufacturer has issued Dornier Service Bulletin SB–328–00–445, dated August 23, 2004. The service bulletin describes procedures for:

- Modifying the electrical wiring of the left-hand and right-hand fuel pumps, which includes installing new supports, wet-installing plugs, and torquing and securing nuts;
- Installing insulation at the left-hand and right-hand flow control and shut-off valves, and other components of the environmental control system (*i.e.*, cross bleed valve; and temperature control valve and cold air unit of the environmental control unit; and bleed air inlet), which includes replacing the existing flex joint covers of the bleed air ducts with new covers;
- Installing markings at fuel wiring harnesses; and
- Amending the Airworthiness Limitations Document.

Accomplishing the actions specified in the service information is intended to adequately address the unsafe condition. The LBA mandated the service information to ensure the continued airworthiness of these airplanes in Germany.

FAA's Determination and Requirements of the Proposed AD

This airplane model is manufactured in Germany and is type certificated for operation in the United States under the provisions of section 21.29 of the Federal Aviation Regulations (14 CFR 21.29) and the applicable bilateral airworthiness agreement. Pursuant to this bilateral airworthiness agreement, the LBA has kept the FAA informed of the situation described above. We have examined the LBA's findings, evaluated all pertinent information, and determined that we need to issue an AD for products of this type design that are certificated for operation in the United States. Therefore, we are proposing this AD, which would require accomplishing the actions specified in the service information described previously. This proposed AD also would require revising the Airworthiness Limitations section of the Instructions for Continued Airworthiness to incorporate new inspections of the fuel tank system.

Costs of Compliance

This proposed AD would affect about 6 airplanes of U.S. registry. The proposed actions would take about 70 work hours per airplane, at an average labor rate of $65 per work hour. Required parts would cost about $14,118 per airplane. Based on these figures, the estimated cost of the proposed AD for U.S. operators is $112,008, or $18,668 per airplane.

Authority for This Rulemaking

Title 49 of the United States Code specifies the FAA's authority to issue rules on aviation safety. Subtitle I, Section 106, describes the authority of the FAA Administrator. Subtitle VII, Aviation Programs, describes in more detail the scope of the Agency's authority.

We are issuing this rulemaking under the authority described in Subtitle VII, Part A, Subpart III, Section 44701, ''General requirements.'' Under that section, Congress charges the FAA with promoting safe flight of civil aircraft in air commerce by prescribing regulations for practices, methods, and procedures the Administrator finds necessary for safety in air commerce. This regulation is within the scope of that authority because it addresses an unsafe condition that is likely to exist or develop on products identified in this rulemaking action.

Regulatory Findings

We have determined that this proposed AD would not have federalism implications under Executive Order 13132. This proposed AD would not have a substantial direct effect on the States, on the relationship between the national Government and the States, or on the distribution of power and responsibilities among the various levels of government.

For the reasons discussed above, I certify that the proposed regulation:

1. Is not a ''significant regulatory action'' under Executive Order 12866;

2. Is not a ''significant rule'' under the DOT Regulatory Policies and Procedures (44 FR 11034, February 26, 1979); and

3. Will not have a significant economic impact, positive or negative, on a substantial number of small entities under the criteria of the Regulatory Flexibility Act.

We prepared a regulatory evaluation of the estimated costs to comply with this proposed AD. See the **ADDRESSES** section for a location to examine the regulatory evaluation.

List of Subjects in 14 CFR Part 39

Air transportation, Aircraft, Aviation safety, Safety.

The Proposed Amendment

Accordingly, under the authority delegated to me by the Administrator, the FAA proposes to amend 14 CFR part 39 as follows:

PART 39—AIRWORTHINESS DIRECTIVES

1. The authority citation for part 39 continues to read as follows:

Authority: 49 U.S.C. 106(g), 40113, 44701.

§ 39.13 [Amended]

2. The FAA amends § 39.13 by adding the following new airworthiness directive (AD):

Fairchild Dornier GmbH (Formerly Dornier Luftfahrt GmbH): Docket No. FAA–2005–21053; Directorate Identifier 2005–NM–053–AD.

Comments Due Date

(a) The Federal Aviation Administration must receive comments on this AD action by May 26, 2005.

Affected ADs

(b) None.

Applicability

(c) This AD applies to all Dornier Model 328–100 series airplanes, certificated in any category.

Unsafe Condition

(d) This AD was prompted by the results of fuel system reviews conducted by the airplane manufacturer. We are issuing this AD to reduce the potential of ignition sources inside fuel tanks, which, in combination with flammable fuel vapors, could result in fuel tank explosions and consequent loss of the airplane.

Compliance

(e) You are responsible for having the actions required by this AD performed within the compliance times specified, unless the actions have already been done.

Modification and Installations

(f) Within 12 months after the effective date of this AD, do the actions in Table 1 of this AD in accordance with the Accomplishment Instructions of Dornier Service Bulletin SB–328–00–445, dated August 23, 2004.

TABLE 1.—REQUIREMENTS

Do the following actions—	By accomplishing all the actions specified in—
(1) Modify the electrical wiring of the left-hand and right-hand fuel pumps.	Paragraph 2.B(1) of the service bulletin.
(2) Install insulation at the left-hand and right-hand flow control and shut-off valves, and other components of the environmental control system.	Paragraph 2.B(2) of the service bulletin.
(3) Install markings at fuel wiring harnesses.	Paragraph 2.B(3) of the service bulletin.

Revision to Airworthiness Limitations

(g) Within 12 months after the effective date of this AD, revise the Airworthiness Limitations section of the Instructions for Continued Airworthiness by inserting a copy of Dornier Temporary Revision TR ALD–080, dated October 15, 2003, into the Dornier 328 Airworthiness Limitations Document. Thereafter, except as provided in paragraph (h) of this AD, no alternative inspection intervals may be approved for this fuel tank system.

Alternative Methods of Compliance (AMOCs)

(h) The Manager, International Branch, ANM–116, Transport Airplane Directorate, FAA, has the authority to approve AMOCs for this AD, if requested in accordance with the procedures found in 14 CFR 39.19.

Related Information

(i) German airworthiness directive D–2005–001, dated January 26, 2005, also addresses the subject of this AD.

Issued in Renton, Washington, on April 18, 2005.

Ali Bahrami,

Manager, Transport Airplane Directorate, Aircraft Certification Service.

[FR Doc. 05–8271 Filed 4–25–05; 8:45 am]

BILLING CODE 4910–13–P

DEPARTMENT OF TRANSPORTATION

Federal Aviation Administration

14 CFR Part 39

[Docket No. FAA–2005–21054; Directorate Identifier 2005–NM–054–AD]

RIN 2120–AA64

Airworthiness Directives; Dornier Model 328–300 Series Airplanes

AGENCY: Federal Aviation Administration (FAA), Department of Transportation (DOT).

ACTION: Notice of proposed rulemaking (NPRM).

SUMMARY: The FAA proposes to adopt a new airworthiness directive (AD) for certain Dornier Model 328–300 series airplanes. This proposed AD would require modifying the electrical wiring of the fuel pumps; installing insulation at the flow control and shut-off valves, and other components of the environmental control system; installing markings at fuel wiring harnesses; replacing the wiring harness of the auxiliary fuel system with a new wiring harness; and installing insulated couplings in the fuel system; as applicable. This proposed AD also would require revising the Airworthiness Limitations section of the Instructions for Continued Airworthiness to incorporate new inspections of the fuel tank system. This proposed AD is prompted by the results of fuel system reviews conducted by the airplane manufacturer. We are proposing this AD to reduce the potential of ignition sources inside fuel tanks, which, in combination with flammable fuel vapors, could result in fuel tank explosions and consequent loss of the airplane.

DATES: We must receive comments on this proposed AD by May 26, 2005.

ADDRESSES: Use one of the following addresses to submit comments on this proposed AD.

- DOT Docket Web site: Go to *http://dms.dot.gov* and follow the instructions for sending your comments electronically.
- Government-wide rulemaking Web site: Go to *http://www.regulations.gov* and follow the instructions for sending your comments electronically.
- Mail: Docket Management Facility, U.S. Department of Transportation, 400 Seventh Street, SW., Nassif Building, room PL–401, Washington, DC 20590.
- By fax: (202) 493–2251.
- Hand Delivery: Room PL–401 on the plaza level of the Nassif Building, 400 Seventh Street, SW., Washington, DC, between 9 a.m. and 5 p.m., Monday through Friday, except Federal holidays.

For service information identified in this proposed AD, contact AvCraft Aerospace GmbH, PO Box 1103, D–82230 Wessling, Germany.

You can examine the contents of this AD docket on the Internet at *http://dms.dot.gov*, or in person at the Docket Management Facility, U.S. Department of Transportation, 400 Seventh Street, SW., room PL–401, on the plaza level of the Nassif Building, Washington, DC. This docket number is FAA–2005–21054; the directorate identifier for this docket is 2005–NM–054–AD.

FOR FURTHER INFORMATION CONTACT: Dan Rodina, Aerospace Engineer, International Branch, ANM–116, FAA, Transport Airplane Directorate, 1601 Lind Avenue, SW., Renton, Washington 98055–4056; telephone (425) 227–2125; fax (425) 227–1149.

SUPPLEMENTARY INFORMATION:

Comments Invited

We invite you to submit any relevant written data, views, or arguments regarding this proposed AD. Send your comments to an address listed under **ADDRESSES**. Include ''Docket No. FAA–2005–21054; Directorate Identifier 2005–NM–054–AD'' at the beginning of your comments. We specifically invite comments on the overall regulatory, economic, environmental, and energy aspects of the proposed AD. We will

consider all comments submitted by the closing date and may amend the proposed AD in light of those comments.

We will post all comments we receive, without change, to *http://dms.dot.gov*, including any personal information you provide. We will also post a report summarizing each substantive verbal contact with FAA personnel concerning this proposed AD. Using the search function of our docket website, anyone can find and read the comments in any of our dockets, including the name of the individual who sent the comment (or signed the comment on behalf of an association, business, labor union, etc.). You can review the DOT's complete Privacy Act Statement in the **Federal Register** published on April 11, 2000 (65 FR 19477–78), or you can visit *http://dms.dot.gov.*

Examining the Docket

You can examine the AD docket on the Internet at *http://dms.dot.gov*, or in person at the Docket Management Facility office between 9 a.m. and 5 p.m., Monday through Friday, except Federal holidays. The Docket Management Facility office (telephone (800) 647–5227) is located on the plaza level of the Nassif Building at the DOT street address stated in the **ADDRESSES** section. Comments will be available in the AD docket shortly after the DMS receives them.

Discussion

The FAA has examined the underlying safety issues involved in recent fuel tank explosions on several large transport airplanes, including the adequacy of existing regulations, the service history of airplanes subject to those regulations, and existing maintenance practices for fuel tank systems. As a result of those findings, we issued a regulation titled ''Transport Airplane Fuel Tank System Design Review, Flammability Reduction and Maintenance and Inspection Requirements'' (67 FR 23086, May 7, 2001). In addition to new airworthiness standards for transport airplanes and new maintenance requirements, this rule included Special Federal Aviation Regulation No. 88 (''SFAR 88,'' Amendment 21–78, and subsequent Amendments 21–82 and 21–83).

Among other actions, SFAR 88 requires certain type design (*i.e.*, type certificate (TC) and supplemental type certificate (STC)) holders to substantiate that their fuel tank systems can prevent ignition sources in the fuel tanks. This requirement applies to type design holders for large turbine-powered transport airplanes and for subsequent modifications to those airplanes. It requires them to perform design reviews and to develop design changes and maintenance procedures if their designs do not meet the new fuel tank safety standards. As explained in the preamble to the rule, we intended to adopt airworthiness directives to mandate any changes found necessary to address unsafe conditions identified as a result of these reviews.

In evaluating these design reviews, we have established four criteria intended to define the unsafe conditions associated with fuel tank systems that require corrective actions. The percentage of operating time during which fuel tanks are exposed to flammable conditions is one of these criteria. The other three criteria address the failure types under evaluation: Single failures, single failures in combination with another latent condition(s), and in-service failure experience. For all four criteria, the evaluations included consideration of previous actions taken that may mitigate the need for further action.

The Joint Aviation Authorities (JAA) has issued a regulation that is similar to SFAR 88. (The JAA is an associated body of the European Civil Aviation Conference (ECAC) representing the civil aviation regulatory authorities of a number of European States who have agreed to co-operate in developing and implementing common safety regulatory standards and procedures.) Under this regulation, the JAA stated that all members of the ECAC that hold type certificates for transport category airplanes are required to conduct a design review against explosion risks.

We have determined that the actions identified in this AD are necessary to reduce the potential of ignition sources inside fuel tanks, which, in combination with flammable fuel vapors, could result in fuel tank explosions and consequent loss of the airplane.

In light of these findings, the Luftfahrt-Bundesamt (LBA), which is the airworthiness authority for Germany, issued German airworthiness directives D–2005–002 (for airplanes with option 033F003 installed) and D–2005–063 (for airplanes without option 033F003 installed), both dated January 26, 2005, to address the unsafe condition previously described on Dornier Model 328–300 series airplanes.

Relevant Service Information

The airplane manufacturer has issued Dornier Service Bulletin SB–328J–00–197, dated August 23, 2004 (for airplanes without option 033F003 installed); and Dornier Service Bulletin SB–328J–00–198, dated August 23, 2004 (for airplanes with option 033F003 installed).

Dornier Service Bulletin SB–328J–00–197 describes procedures for:

1. Modifying the electrical wiring of the left-hand and right-hand fuel pumps, which includes installing new supports, wet-installing plugs, and torquing and securing nuts;
2. Installing insulation at the left-hand and right-hand flow control and shut-off valves, and other components of the environmental control system (*i.e.*, cross bleed valve, temperature control valve and cold air unit of the environmental control unit, and bleed air inlet), which includes replacing the existing flex joint covers of the bleed air ducts with new covers;
3. Installing markings at fuel wiring harnesses; and
4. Amending the Airworthiness Limitations Document (ALD).

Dornier Service Bulletin SB–328J–00–198 describes procedures similar to those described in items 1, 3, and 4 above for Dornier Service Bulletin SB–328J–00–197. Dornier Service Bulletin SB–328J–00–198 also describes procedures for replacing the wiring harness of the auxiliary fuel system with a new wiring harness and installing insulated couplings in the fuel system.

Accomplishing the actions specified in the service information is intended to adequately address the unsafe condition. The LBA mandated the service information to ensure the continued airworthiness of these airplanes in Germany.

FAA's Determination and Requirements of the Proposed AD

This airplane model is manufactured in Germany and is type certificated for operation in the United States under the provisions of section 21.29 of the Federal Aviation Regulations (14 CFR 21.29) and the applicable bilateral airworthiness agreement. Pursuant to this bilateral airworthiness agreement, the LBA has kept the FAA informed of the situation described above. We have examined the LBA's findings, evaluated all pertinent information, and determined that we need to issue an AD for products of this type design that are certificated for operation in the United States. Therefore, we are proposing this AD, which would require accomplishing the actions specified in the service information described previously. This proposed AD also would require revising the Airworthiness Limitations section of the Instructions for Continued Airworthiness to incorporate new inspections of the fuel tank system.

Costs of Compliance

The following table provides the estimated costs for U.S. operators to comply with this proposed AD. The average labor rate is $65 per hour.

ESTIMATED COSTS

For airplanes—	Work hours	Parts	Number of U.S.-registered airplanes	Cost per airplane	Fleet cost
With option 033F003 installed.	95	$9,402	Currently, none of these affected airplanes are on the U.S. Register.	$15,577 if an affected airplane is imported and placed on the U.S. Register in the future.	None.
Without option 033F003 installed.	70	14,118	47	$18,668	$877,396.

Authority for This Rulemaking

Title 49 of the United States Code specifies the FAA's authority to issue rules on aviation safety. Subtitle I, Section 106, describes the authority of the FAA Administrator. Subtitle VII, Aviation Programs, describes in more detail the scope of the Agency's authority.

We are issuing this rulemaking under the authority described in Subtitle VII, Part A, Subpart III, Section 44701, ''General requirements.'' Under that section, Congress charges the FAA with promoting safe flight of civil aircraft in air commerce by prescribing regulations for practices, methods, and procedures the Administrator finds necessary for safety in air commerce. This regulation is within the scope of that authority because it addresses an unsafe condition that is likely to exist or develop on products identified in this rulemaking action.

Regulatory Findings

We have determined that this proposed AD would not have federalism implications under Executive Order 13132. This proposed AD would not have a substantial direct effect on the States, on the relationship between the national Government and the States, or on the distribution of power and responsibilities among the various levels of government.

For the reasons discussed above, I certify that the proposed regulation:

1. Is not a ''significant regulatory action'' under Executive Order 12866;

2. Is not a ''significant rule'' under the DOT Regulatory Policies and Procedures (44 FR 11034, February 26, 1979); and

3. Will not have a significant economic impact, positive or negative, on a substantial number of small entities under the criteria of the Regulatory Flexibility Act.

We prepared a regulatory evaluation of the estimated costs to comply with this proposed AD. See the **ADDRESSES** section for a location to examine the regulatory evaluation.

List of Subjects in 14 CFR Part 39

Air transportation, Aircraft, Aviation safety, Safety.

The Proposed Amendment

Accordingly, under the authority delegated to me by the Administrator, the FAA proposes to amend 14 CFR part 39 as follows:

PART 39—AIRWORTHINESS DIRECTIVES

1. The authority citation for part 39 continues to read as follows:

Authority: 49 U.S.C. 106(g), 40113, 44701.

§ 39.13 [Amended]

2. The FAA amends § 39.13 by adding the following new airworthiness directive (AD):

Fairchild Dornier GmbH (Formerly Dornier Luftfahrt GmbH): Docket No. FAA–2005–21054; Directorate Identifier 2005-NM–054–AD.

Comments Due Date

(a) The Federal Aviation Administration must receive comments on this AD action by May 26, 2005.

Affected ADs

(b) None.

Applicability

(c) This AD applies to Dornier Model 328–300 series airplanes, certificated in any category, serial numbers 3105 through 3223 inclusive.

Unsafe Condition

(d) This AD was prompted by the results of fuel system reviews conducted by the airplane manufacturer. We are issuing this AD to reduce the potential of ignition sources inside fuel tanks, which, in combination with flammable fuel vapors, could result in fuel tank explosions and consequent loss of the airplane.

Compliance

(e) You are responsible for having the actions required by this AD performed within the compliance times specified, unless the actions have already been done.

Without Option 033F003 Installed: Modification and Installations

(f) For airplanes without option 033F003 installed: Within 12 months after the effective date of this AD, do the actions in Table 1 of this AD in accordance with the Accomplishment Instructions of Dornier Service Bulletin SB–328J–00–197, dated August 23, 2004.

TABLE 1.—REQUIREMENTS FOR AIRPLANES WITHOUT OPTION 033F003 INSTALLED

Do the following actions—	By accomplishing all the actions specified in—
(1) Modify the electrical wiring of the left-hand and right-hand fuel pumps.	Paragraph 2.B(1) of the service bulletin.
(2) Install insulation at the left-hand and right-hand flow control and shut-off valves and other components of the environmental control system.	Paragraph 2.B(2) of the service bulletin.
(3) Install markings at fuel wiring harnesses.	Paragraph 2.B(3) of the service bulletin.

With Option 033F003 Installed: Modification, Replacement, and Installation

(g) For airplanes with option 033F003 installed: Within 12 months after the effective date of this AD, do the actions in Table 2 of this AD in accordance with the Accomplishment Instructions of Dornier Service Bulletin SB–328J–00–198, dated August 23, 2004.

TABLE 2.—REQUIREMENTS FOR AIRPLANES WITH OPTION 033F003 INSTALLED

Do the following actions—	By accomplishing all the actions specified in—
(1) Modify the electrical wiring of the left-hand and right-hand fuel pumps.	Paragraph 1.B(1) of the service bulletin.

TABLE 2.—REQUIREMENTS FOR AIRPLANES WITH OPTION 033F003 INSTALLED—Continued

Do the following actions—	By accomplishing all the actions specified in—
(2) Replace the wiring harness of the auxiliary fuel system with a new wiring harness.	Paragraph 1B(2) of the service bulletin.
(3) Install markings at fuel wiring harnesses.	Paragraph 1B(3) of the service bulletin.
(4) Install insulated couplings in the fuel system.	Paragraph 1B(5) of the service bulletin.

Revision to Airworthiness Limitations

(h) Within 12 months after the effective date of this AD, revise the Airworthiness Limitations section of the Instructions for Continued Airworthiness by inserting a copy of Dornier Temporary Revision TR ALD–028, dated October 15, 2003, into the Dornier 328JET Airworthiness Limitations Document. Thereafter, except as provided in paragraph (i) of this AD, no alternative inspection intervals may be approved for this fuel tank system.

Alternative Methods of Compliance (AMOCs)

(i) The Manager, International Branch, ANM–116, Transport Airplane Directorate, FAA, has the authority to approve AMOCs for this AD, if requested in accordance with the procedures found in 14 CFR 39.19.

Related Information

(j) German airworthiness directives D–2005–002 (for airplanes with option 033F003 installed) and D–2005–063 (for airplanes without option 033F003 installed), both dated January 26, 2005, also address the subject of this AD.

Issued in Renton, Washington, on April 18, 2005.

Ali Bahrami,

Manager, Transport Airplane Directorate, Aircraft Certification Service.

[FR Doc. 05–8277 Filed 4–25–05; 8:45 am]

BILLING CODE 4910–13–P

DEPARTMENT OF ENERGY

Federal Energy Regulatory Commission

18 CFR Part 35

[Docket Nos. RM05–10–000 and AD04–13–000]

Imbalance Provisions for Intermittent Resources Assessing the State of Wind Energy in Wholesale Electricity Markets

April 14, 2005.

AGENCY: Federal Energy Regulatory Commission.

ACTION: Notice of Proposed Rulemaking.

SUMMARY: The Federal Energy Regulatory Commission (Commission) is proposing to amend its regulations to require public utilities to append to their open access transmission tariffs (OATTs) an intermittent generator imbalance service schedule.

The intent of the amendment is to clarify the imbalance tariff provisions that have become outdated and have become unjust, unreasonable, unduly discriminatory or preferential, as applied to intermittent resources.

DATES: Comments are due May 26, 2005.

ADDRESSES: Comments may be filed electronically via the eFiling link on the Commission's Web site at *http://www.ferc.gov* . Commenters unable to file comments electronically must send an original and 14 copies of their comments to: Federal Energy Regulatory Commission, Office of the Secretary, 888 First Street, NE., Washington, DC 20426. Refer to the Comment Procedures section of the preamble for additional information on how to file comments.

FOR FURTHER INFORMATION CONTACT:

Matthew J. Deal (Technical Information), Office of Markets, Tariffs and Rates, Federal Energy Regulatory Commission, 888 First Street, NE., Washington, DC 20426, (202) 502–6363.

Bruce Poole (Technical Information), Office of Markets, Tariffs and Rates, Federal Energy Regulatory Commission, 888 First Street, NE., Washington, DC 20426, (202) 502–8468.

Jeffrey Sanders (Technical Information), Office of Market Oversight and Investigations, Federal Energy Regulatory Commission, 888 First Street, NE., Washington, DC 20426, (202) 502–6455.

Jignasa Gadani (Legal Information), Office of the General Counsel, Federal Energy Regulatory Commission, 888 First Street, NE., Washington, DC 20426, (202) 502–8608.

David Withnell (Legal Information), Office of the General Counsel, Federal Energy Regulatory Commission, 888 First Street, NE., Washington, DC 20426, (202) 502–8421.

SUPPLEMENTARY INFORMATION:

Introduction

1. In this Notice of Proposed Rulemaking (NOPR or proposed rule), we propose to clarify and amend the imbalance tariff provisions that have become outdated and have become unjust, unreasonable, unduly discriminatory or preferential, as applied to intermittent resources.[1] At the time Order No. 888 [2] was issued, intermittent resources were not a significant source of generation and typically energy from intermittent resources was sold to the host utility. In the years since the issuance of Order No. 888, intermittent resources have grown at an annual average rate of approximately 20 percent and want to avail themselves of the open access transmission tariff (OATT or tariff) for opportunities to make sales more broadly, but are hesitant to do so because of the application of imbalance provisions that were designed to apply to resources with the ability to control fuel input and thus schedule their energy with precision. These imbalance provisions were not designed to apply to intermittent resources that by nature are weather-driven. In order to remove the unjust, unreasonable, unduly discriminatory or preferential imbalance tariff provisions, while still providing an incentive to intermittent resources to schedule as accurately as possible, the Commission, pursuant to its authority under sections 205 and 206 of the Federal Power Act,[3] proposes to establish a standardized schedule under the Order No. 888 pro forma OATT to address generator imbalances created by

[1] For purposes of this rulemaking, an intermittent resource is an electric generator that is not dispatchable and cannot store its fuel source and therefore cannot respond to changes in system demand or respond to transmission security constraints.

[2] Promoting Wholesale Competition Through Open Access Non-discriminatory Transmission Services by Public Utilities and Recovery of Stranded Costs by Public Utilities and Transmitting Utilities, Order No. 888, 61 FR 21,540 (May 10, 1996), FERC Stats. & Regs. ¶ 31,036 (1996), *order on reh'g,* Order No. 888–A, 62 FR 12,274 (March 14, 1997), FERC Stats. & Regs. ¶ 31,048 (1997), *order on reh'g,* Order No. 888–B, 81 FERC ¶ 61,248 (1997), *order on reh'g,* Order No. 888–C, 82 FERC ¶ 61,046 (1998), *aff'd in relevant part, remanded in part on other grounds sub nom. Transmission Access Policy Study Group, et al.* v. *FERC,* 225 F.3d 667 (DC Cir. 2000), *aff'd sub nom. New York* v. *FERC,* 535 U.S. 1 (2002).

[3] 16 U.S.C. 824d–e (2000).

intermittent resources[4] and clarify the application of the current energy imbalance provision of the Order No. 888 pro forma tariff. Therefore, under this NOPR, intermittent resources will be assessed generator imbalances pursuant to this new schedule and will not be subject to any existing generation imbalance provisions under the OATTs that contain them.[5] The existing Schedule 4 Energy Imbalance Charge would continue to apply to transmission customers only for any net hourly deviations in scheduled load as the Commission had intended in Order No. 888.

2. The adverse impact of certain *pro forma* OATT provisions on the ability of a wind generator to avail itself of open access transmission service came to light through discussions with participants in wholesale electricity markets, including wind generators. The Commission began exploring the issues through a conference held on December 1, 2004, in Denver, Colorado to ''assess the state of wind energy in wholesale electricity markets'' in order ''to explore possible policy changes that would better accommodate the participation of wind energy in wholesale markets.''[6] Prior to the conference, Commission staff issued a briefing paper that discussed several issues that wind energy resources encounter in securing interconnection and transmission service at just and reasonable rates, terms and conditions.[7] Among the issues explored at the December 1 conference was whether the current imbalance provisions contained in the *pro forma* OATT were unjust, unreasonable, unduly discriminatory or preferential for intermittent resources, and thus in need of reform. Subsequent outreach by Commission staff to industry and comments filed by various entities in this proceeding highlighted the need to revisit and reform imbalance provisions.

3. Order No. 888 defined and established certain terms and conditions for energy imbalance service to promote good scheduling practices by transmission customers. Under the energy imbalance service provision of the Order No. 888 *pro forma* tariff, a transmission customer submits a schedule for transmission service and load is permitted to deviate +/−1.5 percent from that schedule. The pricing for energy within and outside of this bandwidth was left for public utilities to propose on a case-by-case basis.

4. Since the issuance of Order No. 888, the Commission has approved energy imbalance service pricing provisions on a case-by-case basis. Generally, transmission providers proposed energy imbalance charges, including penalties for scheduling deviations set at multiples of the energy price. The purpose of this was to promote good scheduling practices by transmission customers.

5. Order No. 888 also distinguished energy imbalances from generator imbalances. Generator imbalance was defined as the difference between the scheduled and actual delivery of energy from the generator, as compared to the energy imbalance in the *pro forma* tariff that focused on deviations between scheduled energy and load fluctuations. While the Commission adopted an energy imbalance schedule for the *pro forma* OATT, it did not adopt a *pro forma* generator imbalance schedule. It explained that a generator should be able to deliver its scheduled hourly energy with precision and expressed concern that if a generator was allowed to deviate from its schedule by 1.5 percent without penalty, it would discourage good generator operating practices.[8] Therefore, it concluded that the requirements for the generator to meet its schedule and any consequence for persistent failure to meet its schedule should be specified in each generator's interconnection agreement with its transmission provider or control area[9] operator. As discussed below, it also noted that the *pro forma* OATT contained several mechanisms to help generators match their output to their schedules.[10]

6. Notwithstanding the Commission's direction in Order No. 888 that generator imbalances should be addressed in a generator's interconnection agreement, several transmission providers have sought Commission approval to include in their OATTs generator imbalance service schedules that resemble the energy imbalance service schedules in their tariffs. In accepting these schedules, the Commission clarified that generator imbalance service was not an ancillary service. Thus, while energy imbalances and generator imbalances are different, some transmission providers use similar provisions to settle them. In addition to these types of generator interconnection service schedules in the OATTs, certain entities have revised their tariffs to reflect the uniqueness of wind energy; and the California Independent System Operator Corporation (California ISO) has a program in place that it claims allows wind resources to compete on a comparable basis as other generators with regard to imbalance provisions.[11]

7. At the time Order No. 888 was developed and issued, wind generation was not a significant energy source in the wholesale electricity market. U.S. wind capacity in 1996 was approximately 1,698 MW.[12] By 2004, installed wind capacity, while still approximately less than one percent of U.S. total installed capacity, has grown to 6,740 MW, an annual growth rate of approximately 20 percent over the last

[4] Attached to this NOPR as Attachment A—Schedule XYZ: Intermittent Generator Imbalance Service Schedule. ''XYZ'' is only a placeholder to allow the transmission provider the flexibility to label this new schedule with the next available number in its OATT.

[5] If the Commission adopts this proposal as a Final Rule, all public utilities that currently have generator imbalance schedules in their OATTs on file would be required to update those existing schedules to exempt intermittent resources. The applicability of this proposed rule is limited to situations where the generator imbalance provisions are not already addressed in existing interconnection agreements between the generator and the transmission provider. To the extent there are existing interconnection agreements that contain generator imbalance service provisions, such agreements should be listed in Appendix 1 to Schedule XYZ.

[6] Notices of Technical Conference, October 4, 2004, November 18, 2004, November 22, 2004 and December 21, 2004, Docket No. AD04–13–000.

[7] Commission Staff's Briefing Paper attached to the November 22, 2004, Notice of Technical Conference, Docket No. AD04–13–000 (Briefing Paper).

[8] Order No. 888–A at 30,230.

[9] We note that, since the advent of Order No. 888, North American Electric Reliability Council (NERC) has been updating its reliability functions and considering whether the reliability functions that control areas have traditionally performed should be unbundled. Accordingly, NERC is developing a Functional Model to enable it to rewrite its reliability standards in terms of the responsible entity which now performs a given reliability function. In particular, with regard to the balancing function, a Balancing Authority is identified under NERC's Functional Model as having the responsibility to maintain the load-resource balance within a Balancing Authority Area. A Balancing Authority Area, in turn, is defined as the collection of generation, transmission, and loads within the metered boundaries of the Balancing Authority. *See* Final Report on the Functional Model—Reliability Standards Coordination Task Force, March 11, 2005. NERC's ''Version 0'' reliability standards became effective April 1, 2005.

[10] These include allowing the modification of schedule closer to real-time, negotiation of more favorable imbalance provisions and dynamic scheduling.

[11] The Commission-approved California ISO Participating Intermittent Resources Program (PIRP) that exempts wind from hourly imbalance penalties and substitutes monthly netting of imbalances in return for centralized wind delivery forecasting, is an example of tariff reforms that could facilitate wind development. *California Independent System Operator Corp.,* 98 FERC ¶ 61,327, *order accepting compliance filing,* 99 FERC ¶ 61,309 (2002). The California ISO's voluntary PIRP was created to accommodate projected growth of wind generation attributable to California's renewable supply requirements.

[12] American Wind Energy Association (AWEA), Wind Power: U.S. Installed Capacity (Megawatts), 1981–2004 (visited Apr. 11, 2005) *http://www.awea.org/faq/instcap.html.*

eight years.[13] As discussed in the Briefing Paper, wind energy, while a relatively new market entrant, is the fastest growing electricity generation technology in the world today. Increasingly attractive economics and technological advances are combining to drive wind industry development. State renewable portfolio standards, federal production tax credits (PTC)[14] and historically high natural gas prices[15] are also driving wind development. While there has been significant progress towards integrating wind resources into suppliers' and loads' portfolios, some challenges may result from the terms and conditions of transmission service required by transmission providers.

8. Recently, proponents of wind generation have been arguing that the deviation between a wind generator's hourly output and its schedule (generator imbalance) is not influenced by the threat of a penalty. Rather, they assert, such imbalances are weather-dependent. Moreover, they note, while improved forecasting could mitigate some imbalances, significant imbalances would remain that cannot be controlled as can thermal generation. Thus, they maintain that wind generators are susceptible to high imbalance charges and/or penalties that discourage the development of and opportunities for wind resources to serve load.

9. The Commission has a duty to prevent unduly discriminatory practices in transmission access. Since deviations by wind generators from their schedules are much more driven by weather than by controllable factors (compared to most other generators), the generator imbalance provisions in transmission providers' OATTs are impeding access to transmission by intermittent resources in such a manner as to be unduly discriminatory under section 206 of the Federal Power Act. A case-by-case analysis of these OATTs would be burdensome and would only serve to delay access to the transmission grid by intermittent resources. Accordingly, we are proposing a new generator imbalance service schedule applicable to intermittent resources to be included in the pro forma tariff for adoption by all transmission providers in their OATTs.[16] This new schedule would effectively supersede the current OATT generator imbalance provisions for intermittent resources. In particular, we propose that the service reflect a bandwidth of +/−10 percent (with a minimum of 2 MW) and allow net hourly intermittent generator imbalances within the bandwidth to be settled at the system incremental cost[17] at the time of the imbalance. We reiterate that transmission customers are and must be allowed to change their schedule up to 20 minutes before the hour.[18] We also reiterate our policy that a transmission provider may only charge the transmission customer for net hourly generator imbalances or net hourly energy imbalances for the same imbalance, but not both.[19] Thus, in the situation where the transmission provider has a choice to charge a transmission customer an energy imbalance or generator imbalance, we propose that the transmission customer would be charged for the net hourly imbalance under the proposed intermittent generator imbalance schedule.

10. In proposing the generator imbalance service approach for intermittent generation resources, the Commission is mindful of its long-standing concerns regarding the maintenance of system reliability and the obligation of public utilities to conform to good utility practices and abide by NERC's reliability standards.[20] When the Commission adopted order No. 888, it took a conservative approach to ensure that system reliability was maintained. For instance, in Order No. 888–A, the Commission explained that the energy imbalance service, in the pro forma OATT, was not intended to be used as a substitute for operating reserves.[21] The Commission also indicated that a transmission customer may not decline the transmission provider's offer of energy imbalance service unless it demonstrates that it has acquired the services from another source and shows that the alternative arrangement for energy imbalance service is adequate and consistent with good utility practice.[22] Further, the Commission denied a request to expand the energy imbalance service bandwidth for a transmission customer purchasing spinning and supplemental reserves because such reserves provide generating capacity that responds to contingency situations (*e.g.,* loss or failure of facilities) and noted that energy supplied within an expanded bandwidth might be provided from reserve capacity that could be needed for maintaining system reliability.[23] In this NOPR, we recognize that intermittent resources, unlike dispatchable generation, have a limited ability to predict and control their output. Additionally, we expect that the penetration rates of these resources for most transmission systems will be relatively small in comparison to total generation and transmission on any system. As such, small variations in output caused by these entities should be easily managed and not unduly threaten system reliability.[24] The intent of the proposals in this NOPR is to not allow intermittent resources carte blanche to vary output and threaten system reliability. We fully expect that to the extent that a specific transmission system configuration may require that additional measures be taken to

[13] Commission staff's analysis is based on data collected from AWEA, Wind Energy Projects Throughout the United States of America (last modified Mar. 24, 2005) *http://www.awea.org/projects/* and Platts' PowerDat.

[14] The PTC, as renewed in October 2004, provides a credit of 1.8 cents/kWh produced for ten years from the date a facility is put into operation. To qualify, a wind facility must be operational before the PTC expires (currently slated for December 2005).

[15] NYMEX spot natural gas prices in nominal dollars.

[16] Any non-public utility that seeks voluntary compliance with the reciprocity condition of an OATT may satisfy this condition by adopting the proposed new schedule. Therefore, public power entities and other non-public utilities with reciprocity tariffs must add the final Schedule XYZ to their reciprocity tariffs if they wish to continue to have safe harbor protection.

[17] ''Incremental costs are defined as the transmission provider's actual average hourly cost of the last 10 MW dispatched to supply the transmission provider's native load, based on the replacement cost of fuel, unit heat rates, start-up costs, incremental operation and maintenance costs, and purchased and interchange power costs and taxes.'' *Consumers Energy Co.,* 87 FERC ¶ 61,170 at 61,679 (1999) (*Consumers*).

[18] Section 13.8 of the *pro forma* OATT.

[19] The Commission found that where a transmission customer schedules 20 MW to serve a 20 MW load, but only 15 MW is delivered to the transmission provider and the load is only 15 MW, the transmission customer should not be charged for a 5 MW energy deviation imbalance and a 5 MW generator deviation imbalance. *Niagara Mohawk Power Corp.,* 86 FERC ¶ 61,009 at 61,028, *order on reh'g,* 87 FERC ¶ 61,148 (1999) (*Niagara Mohawk*). Further in situations where, for example, if a transmission customer schedules 20 MW to serve a 20 MW load, but only 15 MW (or 25 MW) is delivered and load is 25 MW (or 15 MW), then a transmission provider would be allowed to charge the transmission customer both a 5 MW energy imbalance deviation and a 5 MW generator imbalance deviation. We seek comment on these and other possible scenarios where it would be appropriate or inappropriate to charge for generator imbalances and/or energy imbalances. Also, we seek comment on how to expand Schedule XYZ to address the various scheduling deviation situations.

[20] *Policy Statement on Matters Related to Bulk Power System Reliability,* 107 FERC ¶ 61,052, order granting request for clarification, 108 FERC ¶ 61,288 (2004).

[21] Order No. 888–A at 30,230.

[22] Order No. 888–A at 30,231.

[23] Order No. 888–A at 30,232–33.

[24] *See* New York State Energy Research and Development Authority, The Effects of Integrating Wind Power on Transmission System Planning, Reliability and Operations Report on Phase 2: System Performance Evaluation prepared by GE Energy, Energy Consulting (March 2005) and Xcel Energy and the Minnesota Department of Commerce, Wind Integration Study Final Report prepared by EnerNex Corp. and WindLogics (September 2004).

maintain system reliability,[25] we would entertain such proposals to undertake such additional measures, on a case-by-case basis. We seek comment on what impact the proposed bandwidth of +/−10 percent with regard to intermittent generator imbalances and scheduling flexibility might have on the operation of the transmission providers' system and reliability of the system.

11. These proposed changes should encourage the development of wind resources by removing barriers that affect intermittent resources' access to the transmission grid. This will bring benefits to energy customers and support increased reliability by increasing the diversity of energy supplies.

12. The impetus for this proposed rule has been provided by the wind industry. We also recognize that run-of-river hydroelectric and solar power, as well as other emerging technologies, may be similarly situated to wind power with respect to the issues presented here. Accordingly, we request comments on whether there are other technologies that may be subject to this rule and whether the proposal will work for those technologies. We also seek comments on the Commission's proposed definition of intermittent resources as stated in footnote 1 of this NOPR.

Background

Order No. 888

13. In Order No. 888, the Commission concluded that six ancillary services must be included in an OATT.[26] One of those ancillary services is energy imbalance service (Schedule 4 of the *pro forma* OATT).[27] The Commission explained that energy imbalance service ''is provided when the transmission provider makes up for any difference that occurs over a single hour between the scheduled and the actual delivery of energy to a load located within its control area.'' [28] The Commission recognized that the amount of energy taken by load in an hour is variable and not subject to the control of either a wholesale seller or a wholesale requirements buyer.[29]

14. The Commission also found that the energy imbalance service should have an energy deviation band or bandwidth appropriate for load variations and a price for exceeding the bandwidth that is appropriate for excessive load variations.[30] The bandwidth established by the Commission is an hourly deviation band of +/−1.5 percent (with a minimum of 2 MW) for energy imbalance.[31] The Commission further explained that this bandwidth promotes good scheduling practices by transmission customers and that it is important that the implementation of each scheduled transaction not overly burden others.[32]

15. With respect to the hourly energy deviation band, the Commission explained that for energy imbalances within the deviation band, the transmission customer may make up the difference within 30 days (or other reasonable period generally accepted in the region) by adjusting its energy deliveries to eliminate the imbalance (*i.e.*, return energy in kind within 30 days).[33] In addition, the Commission explained that the transmission customer must compensate the transmission provider for an imbalance that falls outside the hourly deviation band and for accumulated minor imbalances that are not made up within 30 days.[34]

16. The Commission further stated that to help customers with the difficulty of forecasting loads far in advance of the hour, the *pro forma* OATT permits schedule changes up to twenty minutes before the hour at no charge.[35] The Commission added that it would allow the transmission provider and the customer to negotiate and file another bandwidth more flexible to the customer, if the same bandwidth is made available on a not unduly discriminatory basis.[36]

17. With respect to the price of energy imbalance service, the Commission explained that the Final Rule intentionally did not provide detailed pricing requirements.[37] Instead, the Commission required transmission providers to apply to the Commission for appropriate rates for energy imbalance service.[38]

18. While the Commission found that energy imbalance service was an ancillary service, it also recognized that differences arise between energy scheduled for delivery from the generator's control area and the amount of energy actually generated in an hour (generator imbalance).[39] It concluded, however, that a generator should be able to deliver its scheduled hourly energy with precision and expressed concern that if it were to allow the generator to deviate from its schedule by 1.5 percent without penalty, as long as it returned the energy in kind at another time, it would discourage good generator operating practices.[40] The Commission stated that a generator will have an interconnection agreement with its transmission provider or control area operator, and that this agreement should specify the requirements for the generator to meet its schedule, and for any consequence for persistent failure to meet its schedule.[41] The Commission concluded that these arrangements should be done on an agreement-by-agreement basis, and that it preferred not to set these standards generically for all parties.[42]

19. In Order No. 888, the Commission decided not to designate dynamic scheduling service as an ancillary service.[43] Dynamic scheduling was considered a special service that was not only used infrequently in the industry, but used advanced technology and required a great level of coordination. Thus, the Commission stated that each dynamic scheduling application has unique costs for special telemetry and control equipment, making it difficult to post a standard price for the service. Therefore, transmission providers were not required to offer this service to a transmission customer, although it was allowed to do so voluntarily.[44] If the customer wanted to purchase this

[25] For example, as the ratio of intermittent resource capacity to generation dispatchable capacity increases, beyond some point it becomes unmanageable with normal operating tools, and thereby destabilizes the system and threatens system reliability.

[26] Order No. 888 at 31,703.

[27] *Id.*

[28] *Id.* at 31,960.

[29] Order No. 888–A at 30,230.

[30] *Id.*

[31] Order No. 888 at 31,960–61. In Order No. 888–A, the Commission recognized the needs of small customers and raised the minimum energy imbalance from one megawatt per hour to two megawatts per hour. In doing so, the Commission sought to balance its primary goal of promoting good scheduling practices with its commitment to provide as much relief as possible to small customers. Order No. 888–A at 30,232–33 and 30,540.

[32] Order No. 888–A at 30,232.

[33] *Id.* at 30,229. In *Niagara Mohawk,* the Commission rejected the return-in-kind energy compensation approach, reiterating its concern in Order No. 888–A that generators might intentionally undergenerate during high-cost hours and make it up by overgenerating during low-cost hours. *Id.* at 86 FERC at 61,028.

[34] Order No. 888–A at 30,229.

[35] Order No. 888–A at 30,233.

[36] *Id.*

[37] *Id.* at 30,234.

[38] *Id.*

[39] *Id.* at 30,230.

[40] *Id.*

[41] *Id.*

[42] *Id.* at 30,230–31.

[43] Dynamic Scheduling provides the metering, telemetering, computer software, hardware, communications, engineering, and administration required to allow remote generators to follow closely the moment-to-moment variations of a local load. In effect, dynamic scheduling electronically moves load out of the control area in which it is physically located and into another control area. Order No. 888 at 31,709–10.

[44] Order No. 888–A at 31,710.

service from a third party, the transmission provider was directed to make a good faith effort to accommodate the necessary arrangements between the customer and the third party for metering and communication facilities.[45]

Case Precedent

20. Although transmission providers have different energy imbalance charges set forth in Schedule 4 of their OATTs, typical pricing provisions provide that the parties correct energy imbalances within the deviation band through return in kind or financial settlement which requires the transmission customer to pay a charge for under-deliveries of energy equal to 100 percent of the transmission provider's system incremental cost for the hour the deviation occurred, and for energy over-deliveries the transmission customer would receive a payment equal to 100 percent of the transmission provider's decremental cost for the hour the deviation occurred.[46] Outside the deviation band, utilities typically charge the transmission customer for under-delivery of energy a charge equal to the greater of $100/MWh or 110 percent of the utility's system incremental cost, and pay the transmission customer for over-delivery of energy a payment equal to 90 percent of the utility's system decremental cost.[47]

21. The Commission has accepted a number of modifications to the OATT to include generator imbalance provisions.[48] The first case involved a filing by Niagara Mohawk Power Corp. (Niagara Mohawk) proposing a separate tariff to deal with generator imbalances.[49] The Commission rejected that approach, but addressed the filing as an amendment to Niagara Mohawk's OATT and accepted generator imbalance provisions for inclusion in Niagara Mohawk's OATT. Subsequently, the Commission accepted a variety of filings submitted by public utilities to amend their OATTs to include generator imbalance provisions.

Order No. 2003

22. In the NOPR in Docket No. RM02–1–000, Standardization of Generator Interconnection Agreements and Procedures, the proposed Large Generator Interconnection Agreement (LGIA) Article 4.3.1 amendment to the OATT required the interconnection customer to make appropriate generator balancing service arrangements [50] before submitting any schedules for delivery service that identified the generating facility as the point of receipt for the scheduled delivery.[51] Specifically, the interconnection customer would have to ensure that the generating facility's actual output matched its scheduled delivery, on an integrated clock basis, including ramping in and out of its schedule. Also, the interconnection customer was required to arrange for the supply of energy when there was a difference between the actual output and the scheduled delivery. The proposed Article 4.3 allowed the interconnection customer to make generator balancing service arrangements in a variety of ways.

23. On rehearing of Order No. 2003, based on objections to the balancing service requirement of Article 4.3, the Commission deleted Article 4.3 (and Article 4.3.1) from the LGIA on the basis that this requirement is more closely related to delivery service than to interconnection service.[52] In Order No. 2003–A, the Commission noted that delivery service requirements are addressed elsewhere in the OATT, and therefore a balancing service requirement, and requirements related to ancillary services generally, should not appear in the LGIA.[53]

24. On rehearing of Order No. 2003–A, the Commission recognized that transmission providers may prefer to include generator balancing service arrangements in the *pro forma* LGIA. The Commission further recognized that some transmission providers may prefer to include such a provision in the interconnection agreement that it enters into with the interconnection customer, rather than in a separate agreement.[54] Therefore, in Order No. 2003–B, the Commission permitted the transmission provider to include a provision for generator balancing service arrangements in individual interconnection agreements.[55]

Summary of Comments in Docket No. AD04–13–000

25. Several industry participants believe that it is appropriate for the Commission to address imbalance penalties and the effect of imbalance penalties on intermittent resources.[56] Edison Electric Institute (EEI) supports review and potential revision to existing transactions scheduling business practices and procedures in order to better accommodate wind energy, provided system reliability is maintained in a cost-effective manner.[57]

26. Certain entities argue that intermittent renewable resources, such as wind generators, lack the ability to control the circumstances affecting their output with the assurance required to maintain electric output schedules.[58] They note that intermittent generators do not have the ability to modify their output as they rely on the weather for their energy source.[59] Therefore, the commenters argue that penalties associated with generator deviations from filed schedules that were intended to prevent generators from gaming the market, do not encourage a wind generator to match its output with the schedule.[60] While some industry participants seek changes to the imbalance provisions contained in public utilities' tariffs,[61] others believe that wind resources should not be assessed any penalties.[62]

27. The Arkansas Public Service Commission (Arkansas Commission)

[45] *Id.*

[46] *See, e.g.,* Schedule 4 (Energy Imbalance Charge) of Arizona Public Service Company and Public Service Company of New Mexico (PNM).

[47] *Id.*

[48] *See, e.g., Niagara Mohawk Power Corp.,* 86 FERC ¶ 61,009 (1999); *PacifiCorp,* 95 FERC ¶ 61,145, *order on reh'g and clarification*, 95 FERC ¶ 61,467 (2001); *Alliant Energy Corporate Services, Inc.,* 93 FERC ¶ 61,340 (2000) (orders on rehearing and court appeal sought on other tariff issues); *Wolverine Power Supply Cooperative, Inc.,* 93 FERC ¶ 61,330 (2000); *Commonwealth Edison Co.,* 93 FERC ¶ 61,021 (2000); *FirstEnergy Operating Cos.,* 93 FERC ¶ 61,200 (2000), *order denying reh'g & granting clarification,* 94 FERC ¶ 61,184 (2001); *Tampa Electric Co.,* 90 FERC ¶ 61,330 (2000), *reh'g denied,* 95 FERC ¶ 61,101 (2001); *Florida Power Corp.,* 89 FERC ¶ 61,263 (1999); and *Consumers,* 87 FERC ¶ 61,170.

[49] *Niagara Mohawk,* 86 FERC at 61,024–29.

[50] A generator balancing service arrangement is a provision of the interconnection agreement that makes the interconnection customer responsible for matching the generating facility's actual output with its scheduled delivery, and requires the interconnection customer to arrange for the supply of energy when there is a difference between the actual output and the scheduled delivery.

[51] *Standardization of Generator Interconnection Agreements and Procedures,* Notice of Proposed Rulemaking, 67 FR 22,250 (May 2, 2002), FERC Stats. & Regs. 32,560 (2002).

[52] *Standardization of Generator Interconnection Agreements and Procedures,* Order No. 2003, 68 FR 49,845 (Aug. 19, 2003), FERC Stats. & Regs., Regulations Preambles ¶ 31,146 (2003) (Order No. 2003), *order on reh'g,* 69 FR 15,932 (Mar. 24, 2004), FERC Stats. & Regs., Regulations Preambles ¶ 31,160 at 667 (2004) (Order No. 2003–A), *order on reh'g,* 70 FR 265 (January 4, 2005), FERC Stats. & Regs., Regulations Preambles ¶ 31,171 (2004) (Order No. 2003–B), *reh'g pending; see also* Notice Clarifying Compliance Procedures, 106 FERC ¶ 61,009 (2004).

[53] Order No. 2003–A at P 667.

[54] Order No. 2003–B at P 75.

[55] *Id.*

[56] *See, e.g.,* Electric Power Supply Association (EPSA) at 2 and AWEA at 2–4 (Jan. 28, 2005 comments).

[57] EEI at 4.

[58] *See, e.g.,* AWEA at 2–4, Renewable Northwest Project (RNP) at 3–4 and Zilkha Renewable Energy (Zilkha) at 5–6.

[59] *See, e.g.,* AWEA at 2–4 and RNP at 3–4.

[60] *See, e.g.,* AWEA at 2–4 and RNP at 3–4.

[61] *See, e.g.,* Calpine at 2 and RNP at 4.

[62] *See, e.g.,* RNP at 3–4 and Zilkha at 5–6.

recognizes that outside of RTOs, the *pro forma* tariff permits the transmission provider to impose substantial imbalance penalties which may pose a magnified burden on wind energy producers because they have trouble predicting their daily generation output.[63] While the Arkansas Commission agrees a review of such charges under the *pro forma* tariff is appropriate and such charges should better reflect incremental costs, it opposes an exception for wind generators.[64] NorthWestern Energy Corporation (NorthWestern Energy) states that it does not oppose the elimination of imbalance penalties for intermittent resources, provided that the Commission address whether the Federal Power Act's prohibition against undue preference and the Commission's policy concerning comparability would be undercut by affording preferential treatment for imbalance penalties to a generator based on fuel source.[65]

28. Oklahoma Municipal Power Authority (OMPA) states that it is the Commission's responsibility to ensure that non-control area and control area utilities have an equal and non-discriminatory opportunity to develop and utilize wind resources.[66] Transmission Access Policy Study Group (TAPS) and OMPA argue that currently, wind generators who operate outside the purchasing utility's control area are exposed to imbalance penalties under Schedule 4 of the OATT for deviations, while control area utilities are able to treat deviations as inadvertent energy, subject to return-in-kind requirements.[67] Calpine states that the Commission should re-evaluate imbalance penalties imposed by control area operators that operate outside of an Independent System Operator (ISO) or Regional Transmission Operator (RTO), whether the penalties apply to intermittent resources or to conventional resources.[68]

29. Several commenters claim that the imbalance penalties are arbitrary and punitive and do not measure the true costs of over-generating or under-generating.[69] They assert that the penalties assessed may be significantly higher than the cost of energy itself and, therefore, are cost-prohibitive for these weather-dependent generators.[70]

30. Several solutions have been proposed for addressing imbalance charges and/or penalties. For example, National Grid USA (National Grid) and RNP states that the Commission should consider imbalance charges for wind resources that are cost-based.[71] Zilkha advocates the elimination of under-generation penalties and supports the development of market mechanisms to address both regulation and energy imbalances resulting from under-generation.[72] National Grid and NorthWestern Energy asserts that wind generators should be responsible for any actual costs incurred, such as system balancing and regulation service, to allow for integration of the wind resource.[73] The Arkansas Commission also states that while eliminating an unwarranted penalty may be appropriate, imbalance charges should not be priced in a manner that subsidize the generator and harms the transmission provider because the transmission provider will likely flow the cost (an added cost of imbalance energy) through to native load customers.[74] Thus, it suggests adjusting the imbalance charge to better reflect the incremental costs, which may be the transmission provider's opportunity cost.[75] EEI suggests that all potential energy imbalance alternatives should explicitly consider whether and to what extent cost shifting and/or subsidization would occur.[76] EEI recommends that the Commission should consider the ''incremental cost plus 10%'' approach that several entities already use for the entities that do not presently have energy imbalance markets.

31. According to National Grid, the proper allocation of actual imbalance costs should provide the necessary incentives for suppliers to remain in balance without resorting to additional punitive measures and cost-based imbalance charges would provide for necessary cost recovery.[77] NorthWestern Energy believes that it is necessary to provide some incentive to intermittent generators to schedule accurately, if they are not charged penalties associated with generation imbalance.[78]

32. One request set forth by commenters is for the Commission to examine the scheduling and imbalance provisions of certain transmission providers that they believe are reasonable for intermittent generators, such as Bonneville Power Administration, PacifiCorp, or the California ISO.[79]

33. Wind proponents support flexible scheduling practices to allow for schedule adjustments closer to real-time.[80] According to the New York Independent System Operator, Inc. (NYISO), energy imbalance penalties may be reduced with improved tools for forecasting wind flows, which would help level the playing field for intermittent resources to compete with other resources.[81]

34. In addition, some entities ask the Commission to consider providing incentives for wind generators to use state-of-the-art forecasting technologies.[82] On the other hand, Northwestern believes that at a minimum, wind generators should be expected to install and utilize the state-of-the-art tools to forecast the wind and resulting generation levels on an hourly basis.[83] It believes that improved wind generation forecasts may help to reduce imbalance penalties, especially when compared to scheduling practices if the generator makes no effort to adjust real-time schedules from the pre-schedule submitted 24 or more hours in advance.[84] Moreover, it asserts that forecasts may help with the reliability concerns associated with a control area's obligation to balance resources and loads.[85] Calpine argues that, although helpful as planning tools, improved wind forecasts are unlikely to directly affect imbalances that occur in real time. Calpine notes that what may be more promising as a means to reduce imbalances from intermittent resources would be to match up those resources' scheduling with the scheduling of non-intermittent resources that could act as back up. Calpine observes that intermittent resources need scheduling backstopping, especially at peak, when single and combined cycle units, with inherent cycling capability, can be matched to intermittent resources in a manner that optimizes the performance of both.[86]

35. EEI states it is critical that additional scheduling flexibility for wind resources be accompanied by companion requirements that large wind facilities participate in state-of-the-art modeling activities.[87] According

[63] Arkansas Commission at 6–7.
[64] Arkansas Commission at 6–7.
[65] Northwestern at 5–7.
[66] OMPA at 2.
[67] OMPA at 2 and TAPS at 1–2 (Post-technical conference comments).
[68] Calpine at 2.
[69] AWEA at 2–4, RNP at 3–4, National Grid at 5–7 and Zilkha at 5–6.
[70] RNP at 3–4.
[71] National Grid at 5–7.
[72] Zilkha at 5–6.
[73] Northwestern at 5–7.
[74] Arkansas Commission at 6–7.
[75] Arkansas Commission at 6–7.
[76] EEI at 4.
[77] National Grid at 5–7.
[78] Northwestern at 5–7.
[79] *See, e.g.*, AWEA at 2–4 and RNP at 3–4.
[80] *See, e.g.*, AWEA at 2–4, RNP at 4.
[81] NYISO at 5–6.
[82] RNP at 4.
[83] Northwestern at 5–7.
[84] Northwestern at 8.
[85] Northwestern at 8.
[86] Calpine at 3.
[87] EEI at 4–5.

to EEI, changes to existing transactions scheduling requirements and procedures should recognize that the reliability of wind generation turbine technology has improved significantly and is becoming a reliable source of generation, and that wind energy remains a significantly less predictable source than thermal and hydroelectric generation.[88]

36. Several other proposals to help manage imbalances have been put forth by other commenters. Calpine supports netting arrangements as an effective means of facilitating the participation of intermittent resources in the marketplace and as an efficient means to resolve imbalances generally.[89] In addition, RNP states that the Commission should consider imbalance charges for wind resources that include monthly imbalance netting and settlement at market prices.[90] Zilkha states that the Commission should exempt intermittent resources from imbalance penalties until structural mechanisms are in place that allow suppliers the flexibility to net and trade imbalances over an extended period of time for an entire wind development zone.[91]

37. National Grid supports further development of aggregation of balancing responsibilities among wind developments and assignment or hedging of imbalance risks.[92]

38. Several other issues were discussed by commenters. Zilkha also suggests that the Commission should require transmission providers to undertake studies to assess the extent to which wind generation can be exempt from imbalance and other under-generation charges without adversely affecting system operations.[93]

39. NorthWestern Energy also believes that the intermittent nature of the wind generator creates the need for regulation service beyond the amount a control area operator has available, therefore, the control area operator must have the ability to limit the wind generator to a level necessary to maintain reliability.[94]

40. According to the California Public Utilities Commission (CPUC), the PIRP in place in California is a key tool in helping intermittent resources to operate competitively in the California energy market, as well as contributing to meeting the renewable portfolio standard mandated by the California Legislature in 2002. San Diego Gas & Electric Company (SDG&E) expresses support for the California ISO's existing mechanism for settling wind energy imbalances. According to SDG&E, the California ISO's mechanism allows a Scheduling Coordinators' Ten-Minute Settlement Interval for Wind Energy Imbalances to be accumulated over a month. SDG&E explains that negative imbalances incurred in some settlement intervals can be offset by positive imbalances in other settlement intervals, with only the resulting net monthly imbalance settled financially. SDG&E states that because the settlement prices in different settlement intervals vary, the monthly accumulation and settlement of net imbalances creates implicit cost and revenue shifts, although SDG&E states that these shifts tend to be averaged over many market participants. SDG&E agrees that the benefits of promoting wind energy development offset the imprecise signals introduced through the monthly settlement mechanism for imbalances.[95]

41. The CPUC states that the incremental cost of ancillary services attributable to wind power is low at low wind penetration levels, but the CPUC recognizes that as the wind penetration level increases, so does the cost of ancillary services. The CPUC notes that the aggregation of intermittent resources effectively addresses this problem, to the ultimate benefit of ratepayers.[96]

Discussion

42. The information gathered in the outreach discussions, together with the filed comments, assisted in our understanding of the issues facing wind energy resources securing transmission service using a *pro forma* tariff under Order No. 888. As a result of our examination of energy imbalance services under Order No. 888 and our subsequent cases regarding generator imbalance services to date, we seek comments on a proposal to establish a new generator imbalance service schedule under the *pro forma* OATT that would apply to intermittent resources. The new generator imbalance service schedule is necessary to address the unique operating characteristics and constraints of wind generation.[97] The results of our review and our proposal are discussed below.

Issues Discussed During Outreach

43. As follow-up to the Commission's December 1, 2004 technical conference, Commission staff held outreach discussions with industry participants to further explore issues facing wind and other intermittent resources. Many of the outreach discussions echoed those written comments summarized above, however, the outreach discussions were beneficial in capturing some additional issues and possible solutions for Commission consideration. Generally, industry participants are supportive of the development of renewable resources, including wind-powered resources. Many states have established renewable energy portfolio standards which require the utility to maintain a certain percentage of renewable resources in its overall generation portfolio.

44. Discussions with industry participants indicated that a significant percentage of the wind resources are presently contracted for as an integrated resource and used to serve native load on the incumbent transmission provider's system. However, considerable interest was expressed in a new business model, *i.e.*, wind resources having the opportunity to access additional customers by, for example, taking transmission service as a customer or selling its output at the busbar to customers other than the incumbent transmission provider. As an entity selling power at the busbar, the wind generator fears that it could be assessed generator imbalance charges if it did not produce the amount scheduled for delivery. As a transmission delivery service customer of the incumbent transmission provider, a wind generator could be assessed a generator imbalance charge for not producing what was scheduled for delivery. Also, in both of these situations, the wind generator would be assessed an energy imbalance charge for not taking the amount of energy scheduled for delivery to load. However, if the wind generator is an integrated resource on the transmission provider's system serving native load, energy imbalances are absorbed by the

[88] EEI at 4–5.

[89] Calpine at 2.

[90] RNP at 4.

[91] Zilkha at 5–6.

[92] National Grid at 5–7.

[93] Zilkha at 6.

[94] Northwestern at 5–7.

[95] SDG&E at 8.

[96] CPUC at 11.

[97] In Order No. 888, the Commission recognized that the amount of energy taken by load in an hour is variable and not subject to the control of a wholesale seller or wholesale requirements customer. Accordingly, the Commission established a bandwidth for the energy imbalance service. Order No. 888–A at 30,230. The Commission also found that a generator should be able to deliver its scheduled hourly energy with precision. *Id.* We now recognize that intermittent generators have a limited ability to forecast actual deliveries because their fuel is weather-dependent and they may not be able to deliver scheduled hourly energy with precision. Accordingly, similar to the concern the Commission expressed in Order No. 888 for load, we are proposing to establish a bandwidth for our proposed intermittent generator service schedule that also reflects a wider bandwidth as compared to thermal generators.

transmission provider relying on its total portfolio of generation resources.

45. According to some industry participants, the only current profitable way to operate wind generation is as an integrated resource. This is due to the intermittent nature of the resource and the potential cost of imbalance penalties that could accrue. In effect, while wind generators have expressed an interest in availing themselves of the opportunities provided by the OATT, they find that the imbalance rules/requirements present a hurdle in doing so.

46. With regard to imbalance penalties acting as a barrier for wind resource development, some industry participants support exempting wind from assessment of these penalties. However, others state that imbalance penalties were designed to promote prudent behavior and, even though a wind generator cannot control its fuel source, they believe that the elimination of imbalance penalties may lead to cost-shifts, leaning on the system, bad generator scheduling practices and gaming.

47. Some entities believe that a separate generator imbalance service similar to the energy imbalance service (Schedule 4) should be added as a service schedule under the *pro forma* OATT, although they noted that there are entities that currently have a generator imbalance service under their OATTs, e.g., PacifiCorp. Certain entites that are developing large wind projects may have successfully negotiated favorable tariff changes with transmission providers, including imbalance penalty provisions that are workable for intermittent resources.

48. Several industry participants believe that the integration of wind into transmission systems, including providing balancing services, will have a physical impact on grid operations and an economic impact on existing customers. However, others allege that most vertically integrated utilities simply use their own generation facilities to provide these services to their customers. Some fear that the costs will rise as increasing amounts of wind are integrated into a system, while others claim that the specific operating characteristics of a system, such as the size of the system and fuel mix, affect their ability to integrate wind.

49. Certain wind interests suggest widening the bandwidth for imbalance deviations to 5 or 10 percent, allowing schedule changes closer to the delivery times, and using an index price/market price/cost of replacement energy to financially settle energy imbalances. Some entities do not want to widen the bandwidths for wind because they believe the current bandwidth ensures scheduling accuracy, discourages gaming and helps maintain reliability.

50. Although many entities believe that dynamic scheduling could be a useful tool for managing imbalances, they have mixed reactions regarding its cost and applicability. One entity stated that economies of scale allow dynamic scheduling to be cost-effective at 10 MW or more.

51. Commission staff also heard that alternatives to the administratively prescribed $100/MWh adder penalty would improve the transparency and fairness of imbalance charges. Alternatives to the adder penalty include having imbalance penalties based either on system incremental costs or market indices.

52. Some transmission owners also discussed how to demonstrate the costs of adding wind to the system so that wind could pay its share of the system integration costs. In addition, the issue of increased reserve requirements and how to account for the additional cost associated with such increase was discussed.

Commission's Proposed Remedy

53. The development of renewable sources of energy, including wind resources, brings benefits to energy customers by providing environmental benefits and supports increased reliability by increasing the diversity of energy supplies. Wind energy can satisfy certain federal and state-mandated programs for the development of renewable energy. On balance, however, we also recognize that there are additional costs incurred in integrating wind energy into the system and that each control area, based on its unique characteristics, will be able to accommodate different amounts of wind resources.

54. As a remedy to the issues we have heard, we propose to establish a new generator imbalance service schedule under the *pro forma* OATT that would apply only to intermittent resources.[98] In the case where a transmission provider's OATT currently includes a generator imbalance charge provision that is more lenient than the charge set forth in Schedule XYZ, we propose that the transmission provider would assess the lesser charge.[99] Moreover, in recognition that some transmission providers assess generator imbalance charges through interconnection agreements rather than OATT provisions, we are soliciting comment on whether to require that, prospectively, any generator imbalance provisions in future interconnection agreements with intermittent generators conform to the provisions in Schedule XYZ.

55. We are proposing not to modify any aspect of the existing energy imbalance service under Schedule 4 of the *pro forma* OATT, however, we are seeking comment on whether and how we should amend Schedule 4. We seek comment on whether our proposal to create a new and standard intermittent generator imbalance service schedule will help intermittent resources reduce their exposure to imbalance charges and/or penalties.

56. As noted previously, in Order No. 888, the Commission concluded that a generator should be able to deliver its scheduled hourly energy with precision, and declined to establish generic standards as part of the *pro forma* OATT. Instead, it noted that a generator would have an interconnection agreement with its transmission provider or control area operator, and that this agreement should specify the requirements for the generator to meet its schedule, and stipulate any consequence for persistent failure to meet that schedule.[100] The Commission also expressed concern that if it were to allow a generator to deviate from its schedule by more than 1.5 percent without a generator imbalance penalty, even if the energy is returned in kind at another time, it would discourage good generator operating practices.

57. The current treatment of generator imbalances with respect to intermittent resources appears to be unduly discriminatory under section 206 of the Federal Power Act. The Commission allows utilities to charge penalties to deter conduct that could threaten system reliability or service to other customers and provide incentives to conform to good utility practices. A properly designed penalty should also have minimal impacts on market participation. However, penalties should be avoidable by customer actions, and should not limit market participation. Thermal generators are subjected to generator imbalance provisions that are tailored to their abilities and give them an unfair and

[98] Attachment A to this NOPR is the proposed Schedule XYZ: Intermittent Generator Imbalance Schedule to be included in all public utilities' tariffs.

[99] We note that, through staff outreach, no intermittent resource indicated that there were not being assessed any imbalance charge.

[100] Some parties have contractual arrangements for generator imbalance service outside the OATT, others have generator imbalance provisions within their OATT (*e.g.*, generator interconnection agreements), and others apparently have been assessed energy imbalance penalties under Schedule 4 of the OATT for generation shortfalls.

unduly discriminatory advantage over intermittent resources, which have much less control over their output. On the other hand, intermittent resources are faced with generator imbalance provisions that fail to recognize their unique needs and prevent them from competing on an equal basis with thermal generators. As noted above, penalties must be avoidable by customer actions, and should not limit market participation. Indeed, intermittent resources face charges that they cannot reasonably avoid, while thermal resources, which can control their generation schedules with much more precision, can generally avoid these charges. At this time, the Commission is concerned that existing generator imbalance provisions are unduly discriminatory against wind generators. Accordingly, the Commission is proposing to add a new Generator Imbalance Service, Schedule XYZ, under the *pro forma* OATT to address generator imbalances for intermittent resources.[101]

58. A major feature of the intermittent generator imbalance service will be the use of a wider deviation bandwidth, which would serve a similar function as the deviation bandwidth for energy imbalance service (Schedule 4). We recognize the necessity of maintaining a deviation bandwidth from the perspective of the transmission provider, but also recognize that some flexibility is needed with respect to intermittent resources and that applying a narrow 1.5 percent bandwidth to intermittent resources would be unduly discriminatory. Specifically, we are proposing an intermittent generator imbalance bandwidth of ±10 percent for the amount scheduled to be generated for each generating hour (with a minimum of 2 megawatts). The intermittent generator imbalance service schedule will include the 2 MW minimum bandwidth in order to meet the needs of small generators. Thus, an intermittent generator of less than 20 MW will have a higher percentage bandwidth, for example, a 2 MW minimum bandwidth for an intermittent generator with a capacity of 10 MW is in effect a deviation bandwidth of 20 percent.

59. The Commission proposes that net hourly deviations within the ±10 percent bandwidth will be priced at the transmission provider's system incremental cost at the time of the deviation. Net hourly deviations outside the stated bandwidth will be priced at the transmission provider's system incremental cost ±10 percent. For example, if an intermittent generator generates in excess of 110 percent of its schedule, it will be paid at 90 percent of the transmission provider's system decremental cost. If the intermittent generator produces less than 90 percent of its schedule, it will be charged 110 percent of the transmission provider's system incremental cost for the difference.[102] While intermittent generators may be unable to change output in real time to meet schedules, with reasonable forecasting and changes to schedules up to 20 minutes before the hour, these generators should be able to limit the charges for exceeding the 10 percent bandwidth on a net hourly basis. We note that the proposed pricing structure may create an incentive to underschedule in an effort to reduce exposure to being charged 110 percent of the transmission provider's system incremental cost. The Commission is soliciting comment on alternative pricing structures.

60. In addition, the Commission is seeking comment regarding the merits of providing an evaluation that would identify systematic and/or significant deviations or biases in actual production as compared to the submitted schedule. Aggregation and netting of hourly schedule deviations over a 12 or 24 month time period could provide a reasonable time period for this evaluation. Any deviation would then be compared to a to-be-established bandwidth. We seek comments on evaluation methods and bandwidths to achieve this objective.

61. The Commission seeks comment on this proposed bandwidth and the applicable pricing mechanisms. Particularly, the Commission is interested in comments addressing whether a different bandwidth is better suited for application to generation deviations for intermittent resources. The Commission is also interested in comments regarding the appropriate levels to price deviations inside the bandwidth and deviations that exceed the bandwidth. In addition, some wind resources have requested that there should be no bandwidth for imbalances incurred by intermittent resources. We believe that ''no bandwidth'' means that the transmission customer would be charged a fixed charge (*e.g.,* 100 percent of system incremental cost or 90/110 percent of the system incremental cost) regardless of the size of the generator imbalance. Therefore, the Commission seeks comment on whether not having a bandwidth is appropriate for intermittent resources and, in the absence of a bandwidth, what are the appropriate levels to price deviations.

Scheduling Flexibility

62. Under Order No. 888, all transmission customers must submit a schedule one day in advance. Order No. 888–A recognizes that transmission customers can reduce their costs by making schedule changes up to 20 minutes before the hour at no charge. It has been asserted that technological improvements since the issuance of Order No. 888 allow these schedules to be adjusted and acted on very close to real time at no additional cost to the transmission customer.

63. Due to the nature of the intermittent resource, being able to schedule as close to the start of the operating hour as possible provides for the highest degree of accuracy.[103] Market Participants have expressed concerns that not all transmission providers allow for schedule changes within the timeframe currently allowed under the *pro forma* tariff (*i.e.,* 20 minutes before the hour). In addition, of those transmission providers that do conform to the *pro forma* scheduling provisions, it is claimed that some calculate deviations based on the difference between the amount generated and the amount scheduled in the Day-Ahead timeframe. This would appear to be inconsistent with the original intent of the Commission to allow for schedule changes up to 20

[101] We note that several transmission providers already have generator imbalance service provisions in their OATTs. However, we will not use these existing provisions as a basis for the new proposed Schedule XYZ since the existing provisions were adopted with thermal generators in mind and do not address the inherent scheduling problems associated with intermittent resources. If the Commission decides to adopt Schedule XYZ in a final rule, the conforming changes will be required to be submitted to the existing generator imbalance service schedules contained in the OATTs.

[102] This net hourly pricing mechanism is consistent with the mechanism most transmission providers typically use for energy imbalance service under Schedule 4 of the *pro forma* OATT. In addition, those transmission providers that have added a generator imbalance provision to their OATT, have typically priced imbalances using system incremental cost.

[103] Significant improvements in collecting and compiling accurate weather information and forecasting the speed of wind may have substantially reduced the difference between estimated and actual wind power production/transmission volumes. Two types of forecasting are done: ''State of the Art Forecasting'' which is characterized by the use of atmospheric modeling and/or mass motion modeling, and a basic persistence forecasting technique. A persistence forecast is accurate in the short term but degrades faster than a more robust State of the Art Forecast. These two methods of forecasting can result in varying expectations and planning time horizons between users. Electric Power Research Institute, California Wind Energy Forecasting System Development and Testing Phase 2: 12 Month Testing, July 2003 (EPRI Report No. 1007339).

minutes before the hour in order to minimize exposure to imbalances.

64. We believe that the flexibility to modify a schedule up to 20 minutes before the hour, as the *pro forma* tariff currently allows, will be a valuable tool to assist intermittent generators in minimizing exposure to the costs associated with imbalances. In addition, by allowing intermittent generators to modify their schedules closer to real-time based on more accurate forecast information, we believe that the transmission provider will have more accurate operating information and be better equipped to operate the system in a reliable and efficient manner. Therefore, we reiterate that our intent in Order No. 888 was that transmission providers must allow transmission customers to modify schedules up to 20 minutes before the hour and that any net hourly imbalance calculation will be determined from the last accepted schedule. We seek comment on whether this scheduling flexibility, with other changes proposed above, will help encourage wind generators to schedule as accurately as possible and while avoiding generator imbalance charges outside the +/−10 percent bandwidth. We seek comment on whether allowing schedule changes up to 20 minutes before the hour and making a schedule financially binding will prevent or create a hardship in instances where the Commission has already accepted proposals based on existing regional variations.

Other Proposals To Resolve Imbalances

65. As noted above, several entities have proposed additional ways to reduce imbalances, and thus reduce or eliminate charges and/or penalties. These include matching up intermittent resources scheduling with the scheduling of non-intermittent resources that could act as a back up; netting arrangements; settling arrangements; trading arrangements; aggregation of balancing responsibility among wind developments; assignment or hedging of imbalance risks; and dynamic scheduling. We seek comment on how these terms and mechanisms or arrangements would reduce generator imbalances, as well as seek sample proposals of such mechanisms or arrangements that currently exist. We also seek comment on any other proposal not listed above that would reduce generator imbalances.

Miscellaneous

Control Area Utilities Versus Non-Control Area Utilities

66. OMPA, TAPS and AWEA allege that under many tariffs today, non-control area utilities are subject to energy imbalance penalty charges for deviations that control area utilities may treat as inadvertent energy subject to return-in-kind requirements, making it prohibitive for transmission dependent utilities that are not control areas to participate in wind generation.[104] TAPS argues that a transmission dependent utility (OMPA) and a control area operator (Oklahoma Gas & Electric Company (OG&E)), demonstrate the highly discriminatory impacts of the imbalance penalties. It asks the Commission to promptly address the disparate and punitive treatment of energy imbalance under Schedule 4 of the Open Access Transmission Tariff.

67. TAPS asserts that not only is OG&E exempt from paying energy imbalance penalties, but it receives the imbalance charges levied upon OMPA furthering the competitive disadvantage. TAPS argues that transmission dependent utilities should not have to wait for introduction of real-time RTO energy markets in order to escape discriminatory treatment of imbalances. OMPA suggests that regardless of whether a customer is inside a control area or outside, if the tariff were applied equally, both customers would face the same costs.

68. We believe that this issue is beyond the scope of this proceeding, and therefore, it will be addressed at a later time.

Variations From Schedule XYZ

69. The Commission is proposing to permit public utilities to justify variations from the terms of the final Schedule XYZ using the approach taken in Order No. 2003. In Order No. 2003, the Commission modified the approach taken in Order No. 888,[105] which allowed two types of variations. First, transmission providers may seek variations to the *pro forma* OATT based on regional reliability requirements.[106] Second, transmission providers may argue that proposed changes to any OATT provision are ''consistent with or superior to'' the terms of the *pro forma* OATT.[107] Additionally, since Order No. 2003 allows RTOs and ISOs greater flexibility in complying with its provisions,[108] we are proposing to that they may seek an ''independent entity variation'' from the pricing and non-pricing provisions of the *pro forma* Schedule XYZ. The Commission intends to apply all three of these variation standards to the proposed variations from Schedule XYZ the Commission finally adopts in this proceeding.

Implementation

70. As noted above, the Commission has previously accepted proposals by transmission providers to amend their OATTs to specifically include a generator imbalance schedule. In doing so, the Commission permitted the transmission provider to collect the generator imbalance charge from the transmission customer. Specifically, the Commission concluded that there was nothing inherently unreasonable about holding the transmission customer responsible for ensuring that the amount of energy scheduled for its transaction is delivered to the transmission provider.[109] We note that the *pro forma* OATT currently does not contain a provision that would permit the transmission provider to collect the generator imbalance charge proposed herein from the generator.

71. Accordingly, the Commission is soliciting comments on how best to implement this new generator imbalance service schedule. Specifically, should the transmission provider collect generator imbalance charges from the transmission customer with the transmission customer recovering these charges through a separate agreement with the generator, or should the transmission provider collect generator imbalance charges from the generator pursuant to an arrangement in its interconnection agreement pursuant to Order No. 2003–B? If the transmission provider collects payment from the generator, how should the *pro forma* agreement between the transmission provider and the generator be structured?

Information Collection Statement

72. Office of Management and Budget (OMB) regulations require OMB to approve certain information collection requirements imposed by agency rule.[110] Comments are solicited on the

[104] TAPS argues that the inherently unpredictable and intermittent nature of wind power heightens the magnitude and discriminatory nature of this continued treatment, and discourages non-control area utilities from developing and participating in wind resources.

[105] Order No. 888 at 31,760–1.

[106] *See* Order No. 2003 at P 823–24.

[107] *See id.* P 816.

[108] *See id.* at P 822–27; *see also* Order No. 2003–A at P 48.

[109] *Florida Power Corporation,* 89 FERC ¶ 61,263 (1999).

[110] 5 CFR 1320.11 (2004).

Commission's need for this information, whether the information will have practical utility, the accuracy of provided burden estimates, ways to enhance the quality, utility and clarity of the information to be collected, and any suggested methods for minimizing respondents' burden, including the use of automated information techniques.

73. *Public Reporting Burden:*

Data collection	No. of respondents	No. of responses	Hours per response	Total annual hours
FERC–516	238	1	2	476

74. *Information Collection Costs:* The Commission seeks comments on the costs to comply with these requirements. It has projected the annualized cost for all respondents to be: Annualized Capital/Startup Costs-Staffing requirements to review and prepare an intermittent resource imbalance service schedule = $71,400. (238 respondents × $150 hourly rate × 2 hours per respondent).

75. The OMB regulations require OMB to approve certain information collection requirements imposed by agency rule.[111] Accordingly, pursuant to OMB regulations, the Commission is providing notice of its proposed information collections to OMB.

Title: FERC–516, Electric Rate Schedule Filings.

Action: Proposed Information Collection.

OMB Control No.: 1902–0096.

The applicant shall not be penalized for failure to respond to this collection of information unless the collection of information displays a valid OMB control number.

Respondents: Business or other for profit.

Frequency of Responses: One-time implementation.

Necessity of Information: The proposed rule would revise the requirements contained in 18 CFR part 35. The Commission is seeking to create a new service schedule under the *pro forma* OATT to address generator imbalance energy for intermittent resources. In particular, the Commission will propose that public utilities add a new service schedule for under their OATTs which provides for generator imbalance service for intermittent resources. The new service schedule establishes a deviation bandwidth and stipulates pricing of intermittent resource imbalance energy inside and outside the bandwidth. The proposed rule would require that each public utility that owns, operates, or controls transmission facilities participate in one-time filings incorporating the new service schedule into their own open access transmission tariffs.

Internal Review: The Commission has assured itself, by means of internal review, that there is specific, objective support for the burden estimates associated with the information collection requirements. The Commission's Office of Market, Tariffs and Rates will use the data included in filings under section 205 of the Federal Power to adopt provisions for imbalance services for intermittent resources. These information requirements conform to the Commission's plan for efficient information collection, communication, and management within the electric power industry. Interested persons may obtain information on the reporting requirements by contacting: Federal Energy Regulatory Commission, the difference between forward market schedules and metered output 888 First Street, NE., Washington, DC 20426, Attention: Michael Miller, Office of the Executive Director, phone: (202) 502–8415, fax: (202) 273–0873, e-mail: *michael.miller@ferc.gov.* Comments on the proposed requirements of the subject rule may also be sent to the Office of Information and Regulatory Affairs, Office of Management and Budget, Washington, DC 20503, Attention: Desk Officer for the Federal Energy Regulatory Commission, phone: (202) 395–4650.

Environmental Analysis

76. The Commission is required to prepare an Environmental Assessment or an Environmental Impact Statement for any action that may have a significant adverse effect on the human environment.[112] The Commission has categorically excluded certain actions from this requirement as not having a significant effect on the human environment. Included in the exclusion are rules that are clarifying, corrective, or procedural, or that do not substantially change the effect of the regulations being amended.[113] The exclusion also includes information gathering, analysis, and dissemination.[114] The rules proposed in this NOPR would update and clarify the application of a new generator imbalance service schedule to the Commission's *pro forma* to intermittent resources. Therefore, this NOPR falls within the categorical exemptions provided in the Commission's Regulations, and as a result neither an environmental impact statement nor an environmental assessment is required. Additionally, we note that this proposed rule will help the development and interconnection of wind plants, eliminating the airborne and other emissions that would result from constructing fossil fuel generating plants instead.

Regulatory Flexibility Act Certification

77. The Regulatory Flexibility Act of 1980 (RFA)[115] generally requires a description and analysis of final rules that will have significant economic impact on a substantial number of small entities.

78. The Commission does not believe that this proposed rule would have such an impact on small entities. Most filing companies subject to the Commission's jurisdiction do not fall within the RFA's definition of a small entity.[116] Further, the filing requirements contain standard generator interconnection procedures and agreement for interconnecting generators larger than 20 MW, which exceeds the threshold of the Small Business Size Standard of NAICS. Therefore, the Commission certifies that this rule will not have a significant economic impact on a substantial number of small entities.

[111] *Id.*

[112] Order No. 486, Regulations Implementing the National Environmental Policy Act, 52 FR 47897 (Dec. 17, 1987), FERC Stats. & Regs. Preambles 1986–1990 ¶ 30,783 (1987).

[113] 18 CFR 380.4(a)(2)(ii) (2004).

[114] 18 CFR 380.4(a)(5) (2004).

[115] 5 U.S.C. 601–612.

[116] 5 U.S.C. 601(3), citing to section 3 of the Small Business Act, 15 U.S.C. 632. Section 3 of the Small Business Act defines a ''small-business concern'' as a business which is independently owned and operated and which is not dominant in its field of operation. The Small Business Size Standards component of the North American Industry Classification System defines a small utility as one that, including its affiliates is primarily engaged in the generation, transmission, or distribution of electric energy for sale, and whose total electric output for the preceding fiscal years did not exceed 4 MWh. 13 CFR 121.201 (Sector 22, Utilities, North American Industry Classification System, NAICS) (2004).

Comment Procedures

79. The Commission invites interested persons to submit comments on the matters and issues proposed in this notice to be adopted, including any related matters or alternative proposals that commenters may wish to discuss. Comments are due May 26, 2005. Comments must refer to Docket No. RM05–10–000, and must include the commenter's name, the organization they represent, if applicable, and their address in their comments. Comments may be filed either in electronic or paper format.

80. Comments may be filed electronically via the eFiling link on the Commission's Web site at *http://www.ferc.gov*. The Commission accepts most standard word processing formats and commenters may attach additional files with supporting information in certain other file formats. Commenters filing electronically do not need to make a paper filing. Commenters that are not able to file comments electronically must send an original and 14 copies of their comments to: Federal Energy Regulatory Commission, Office of the Secretary, 888 First Street NE., Washington, DC 20426.

81. All comments will be placed in the Commission's public files and may be viewed, printed, or downloaded remotely as described in the Document Availability section below. Commenters on this proposal are not required to serve copies of their comments on other commenters.

Document Availability

82. In addition to publishing the full text of this document in the **Federal Register**, the Commission provides all interested persons an opportunity to view and/or print the contents of this document via the Internet through FERC's Home Page (*http://www.ferc.gov*) and in FERC's Public Reference Room during normal business hours (8:30 a.m. to 5 p.m. Eastern time) at 888 First Street, NE., Room 2A, Washington DC 20426.

83. From FERC's Home Page on the Internet, this information is available in the Commission's document management system, eLibrary. The full text of this document is available on eLibrary in PDF and Microsoft Word format for viewing, printing, and/or downloading. To access this document in eLibrary, type the docket number excluding the last three digits of this document in the docket number field.

84. User assistance is available for eLibrary and the FERC's Web site during normal business hours. For assistance, please contact FERC Online Support at *FERCOnlineSupport@ferc.gov.* or toll free at (866) 208–3676, or for TTY, (202) 502–8659. E-Mail the Public Reference Room at *public.referenceroom@ferc.gov* or (202) 502–8371.

List of Subjects in 18 CFR Part 35

Electric power rates, Electric utilities.

By direction of the Commission.

Linda Mitry,

Deputy Secretary.

In consideration of the foregoing, the Commission proposes to amend part 35, Chapter I, Title 18, *Code of Federal Regulations,* as follows.

PART 35—FILING OF RATE SCHEDULES AND TARIFFS

1. The authority citation for part 35 continues to read as follows:

Authority: 16 U.S.C. 791a–825r, 2601–2645; 31 U.S.C. 9701; 42 U.S.C. 7101–7352.

2. In § 35.28, the last sentence in the paragraph (d) introductory text is revised, and paragraph (g) is added to read as follows:

§ 35.28 Non-discriminatory open access transmission tariff.

* * * * *

(d) *Waivers.* * * * Except as provided in paragraph (f) and (g) of this section, an application for waiver must be filed either:

* * * * *

(g) *Intermittent generator imbalance service.* (1) For purposes of this section, an intermittent resource is an electric generator that is not dispatchable and cannot store its fuel source and therefore cannot respond to changes in system demand or respond to transmission security constraints.

(2) Every public utility that is required to have on file a non-discriminatory open access transmission tariff under this section must amend such tariff by adding the intermittent generator imbalance service schedule contained in Order No. ____, FERC Stats. & Regs. ¶ _____ (Final Rule on Imbalance Provisions for Intermittent Resources), or such other intermittent generator imbalance service schedule as may be approved by the Commission consistent with the Final Rule on Imbalance Provisions for Intermittent Resources.

(i) The amendment required by the preceding subsection must be filed no later than [insert date 60 days after publication of the final rule in the **Federal Register**].

(ii) Any public utility that seeks a deviation from the intermittent generator imbalance schedule contained in Order No. __, FERC Stats. & Regs. ¶ ____ (Final Rule on Imbalance Provisions for Intermittent Resources), must demonstrate that the deviation is consistent with the principles of Order No. ¶ ____, FERC Stats. & Regs. ¶ _____ (Final Rule on Imbalance Provisions for Intermittent Resources).

(3) The non-public utility procedures for tariff reciprocity compliance described in paragraph (e) of this section are applicable to the intermittent generator imbalance service schedule.

(4) A public utility subject to the requirements of this paragraph (g) may file a request for waiver of all or part of the requirements of this paragraph (g), for good cause shown. An application for waiver must be filed either:

(i) No later than [insert date 60 days after publication of the final rule in the **Federal Register**], or

(ii) No later than 60 days prior to the time the public utility would otherwise have to comply with the requirements of this paragraph (g).

Note: The following Attachments will not be published in the Code of Federal Regulations.

Attachment A

Schedule XYZ: Intermittent Generator Imbalance Service

Intermittent Generator Imbalance Service is provided when a difference occurs between the output of an intermittent generator located in the Transmission Provider's Balancing Area and a delivery schedule from that generator to (1) another Balancing Area or (2) a load within the Transmission Provider's Balancing Area over a single hour. The Transmission Provider must offer this service when the transmission service is used to deliver energy from an Intermittent Generator located within its Balancing Area that is not identified in Appendix 1 to this Schedule. The Transmission Customer must either purchase this service from the Transmission Provider or make alternative comparable arrangements to satisfy its Intermittent Generator Imbalance Service obligation. To the extent the Balancing Authority performs this service for the Transmission Provider, charges to the Transmission Customer are to reflect only a pass-through of the costs charged to the Transmission Provider by that Balancing Authority. For a single event where a Generator Imbalance occurs, but is offset by a corresponding Energy Imbalance, only the Generator Imbalance charge will be assessed. The Transmission Provider shall establish a deviation band of +/−10 percent (with a minimum of 2 MW) of the scheduled transaction to be applied on a net hourly basis to any Intermittent Generator Imbalance that occurs as a result of the Transmission Customer's scheduled transaction(s). All Intermittent Generator Imbalances will be subject to charges set forth below. All Intermittent Generator Imbalances will be subject to the lesser of the charges set forth below or the charges that would have been

assessed under this tariff if the Generator were not an Intermittent Generator.

Charges for Intermittent Generator Imbalance Service: Described below is the methodology for calculating the charges applicable to Intermittent Generator Imbalances.

(1) Net Hourly Intermittent Generator Imbalances Within the Deviation Band.

For each hour when the Intermittent Generator's actual generation exceeds the amount of generation scheduled but is within the deviation band as provided in this Schedule, the Transmission Provider shall compensate the Transmission Customer at a rate equal to 100 percent of the Transmission Provider's System Decremental Cost at the time of the deviation.

For each hour when the intermittent generator's actual generation is below the amount of generation scheduled but is within the deviation band as provided in this Schedule, the Transmission Customer shall compensate the Transmission Provider at a rate equal to 100 percent of the Transmission Provider's System Incremental Cost.

(2) Net Hourly Generator Imbalances Outside the Deviation Band.

For each hour when the Intermittent Generator's actual generation exceeds the amount of generation scheduled but is outside the deviation band (*i.e.*, produces 110 percent or more its schedule) as provided in this Schedule, the Transmission Provider shall compensate the Transmission Customer at a rate equal to 90 percent of the Transmission Provider's System Decremental Cost at the time of the deviation.

For each hour when the Intermittent Generator's actual generation is below the amount of generation scheduled but outside the deviation band (*i.e.*, produces 90 percent or less of its schedule), as provided this Schedule, the Transmission Customer shall compensate the Transmission Provider at a rate equal to 110 percent of the Transmission Provider's System Incremental Cost at the time of the deviation.

Attachment B: List of Commenters in Docket No. AD04–13–000

American Public Power Association
American Wind Energy Association (AWEA) (Filed pre- and post-technical conference comments and March 10, 2005 comments.)
Arkansas Public Service Commission (Arkansas Commission)
California Edison Company
California Energy Commission
California Public Utilities Commission (California PUC)
California Wind Energy Association
Calpine Corporation (Calpine)
Edison Electric Institute, *et al.* (EEI)
Electric Power Supply Association (EPSA)
National Grid USA (National Grid)
National Wind Coordinating Committee
New York Independent System Operator, Inc. (NYISO)
New York State Department of Public Service
NorthWestern Energy Corporation (NorthWestern Energy)
Oklahoma Municipal Power Authority (OMPA)
PacifiCorp
Pacific Gas and Electric Company
PJM Interconnection L.L.C.
Renewable Northwest Project (RNP)
San Diego Gas and Electric (SDG&E) (Comments filed late.)
Transmission Access Policy Study Group (TAPS) (Filed pre- and post-technical conference comments.)
Wind West Wires
Western Interstate Energy Board
Xcel Energy Services, Inc. (Xcel)
Zilkha Renewable Energy (Zilkha)

Note: Not all the commenters listed above addressed the imbalance issue.

[FR Doc. 05–8201 Filed 4–25–05; 8:45 am]
BILLING CODE 6717–01–P

DEPARTMENT OF THE TREASURY

Internal Revenue Service

26 CFR Part 48

[REG–154000–04]

RIN 1545–BE04

Diesel Fuel and Kerosene Excise Tax; Dye Injection

AGENCY: Internal Revenue Service (IRS), Treasury.

ACTION: Notice of proposed rulemaking by cross reference to temporary regulations and notice of public hearing.

SUMMARY: In the Rules and Regulations section of this issue of the **Federal Register**, the IRS is issuing temporary regulations relating to the mechanical dye injection of diesel fuel and kerosene. The text of those regulations also serves as the text of these proposed regulations. These regulations affect certain enterers, refiners, terminal operators, and throughputters.

DATES: Written and electronic comments must be received by June 27, 2005. Requests to speak and outlines of topics to be discussed at the public hearing scheduled for July 19, 2005, must be received by June 27, 2005.

ADDRESSES: Send submissions to CC:PA:LPD:PR (REG–154000–04), room 5203, Internal Revenue Service, POB 7604, Ben Franklin Station, Washington DC 20044. Submissions may be hand-delivered Monday through Friday between the hours of 8 a.m. and 4 p.m. to: CC:PA:LPD:PR (REG–154000–04), Courier's Desk, Internal Revenue Service, 1111 Constitution Avenue, NW., Washington, DC or submitted electronically via the IRS Internet site at: *http://www.irs.gov/regs* or via the Federal eRuling portal at *http://www.regulations.gov* (IRS and REG–154000–04). The public hearing will be held in the IRS Auditorium, Internal Revenue Building, 1111 Constitution Avenue, NW., Washington, DC.

FOR FURTHER INFORMATION CONTACT: Concerning the proposed regulations, William Blodgett at (202) 622–3090; concerning submissions of comments, the hearing, and/or to be placed on the building access list to attend the hearing, Sonya Cruse at (202) 622–7180 (not toll-free numbers).

SUPPLEMENTARY INFORMATION:

Paperwork Reduction Act

The collection of information contained in this notice of proposed rulemaking has been submitted to the Office of Management and Budget for review in accordance with the Paperwork Reduction Act of 1995 (44 U.S.C. 3507(d)). Comments on the collection of information should be sent to the Office of Management and Budget, Attn: Desk Officer for the Department of the Treasury, Office of Information and Regulatory Affairs, Washington, DC 20503, with copies to the Internal Revenue Service, Attn: IRS Reports Clearance Officer, SE:W:CAR:MP:T:T:SP, Washington, DC 20224. Comments on the collection of information should be received by June 27, 2005.

Comments are specifically requested concerning:

Whether the proposed collection of information is necessary for the proper performance of the functions of the Internal Revenue Service, including whether the information will have practical utility;

The accuracy of the estimated burden associated with the proposed collection of information (see below);

How the quality, utility, and clarity of the information to be collected may be enhanced;

How the burden of complying with the proposed collection of information may be minimized, including through the application of automated collection techniques or other forms of information technology; and

Estimates of capital or start-up costs and costs of operation, maintenance, and purchase of service to provide information.

The collection of information in this proposed regulation is in §§ 48.4082–1(d)(2), 48.4082–1(d)(4), 48.4082–1(d)(6) and 48.4101–1(h)(3). This collection of information is necessary to obtain a tax benefit. The likely recordkeepers are terminal operators and enterers.

Estimated total annual reporting and/or recordkeeping burden: 1,400 hours.

Estimated average annual burden hours per recordkeeper: 7 hours.

Estimated number of respondents and/or recordkeepers: 200.

An agency may not conduct or sponsor, and a person is not required to respond to, a collection of information unless it displays a valid control number assigned by the Office of Management and Budget.

Books or records relating to a collection of information must be retained as long as their contents may become material in the administration of any internal revenue law. Generally, tax returns and tax return information are confidential, as required by 26 U.S.C. 6103.

Background

Temporary regulations in the Rules and Regulations section of this issue of the **Federal Register** amend Manufacturers and Retailers Excise Taxes Regulations (26 CFR part 48) under sections 4082 and 4101. The temporary regulations set forth requirements regarding the mechanical dye injection systems for diesel fuel and kerosene and are required by the American Jobs Creation Act of 2004. The text of those temporary regulations also serves as the text of these proposed regulations. The preamble to the temporary regulations explains the temporary regulations.

Special Analyses

It has been determined that this notice of proposed rulemaking is not a significant regulatory action as defined in Executive Order 12866. Therefore, a regulatory flexibility assessment is not required. It also has been determined that section 553(b) of the Administrative Procedure Act (5 U.S.C. chapter 5) does not apply to these regulations. It is hereby certified that the collection of information in these regulations will not have a significant economic impact on a substantial number of small entities. This certification is based on the fact that the time required to maintain the required records and report to the IRS is minimal and will not have a significant impact on those small entities. Therefore, a Regulatory Flexibility Analysis under the Regulatory Flexibility Act (5 U.S.C. chapter 6) is not required. Pursuant to section 7805(f) of the Internal Revenue Code, this notice of proposed rulemaking will be submitted to the Chief Counsel for Advocacy of the Small Business Administration for comment on its impact on small business.

Comments and Public Hearing

Before these proposed regulations are adopted as final regulations, consideration will be given to any written (a signed original and eight (8) copies) or electronic comments that are submitted timely to the IRS. All comments will be available for public inspection and copying.

A public hearing has been scheduled for July 19, 2005, at 10 a.m. in the IRS Auditorium, Internal Revenue Building, 1111 Constitution Ave., NW., Washington, DC. All visitors must present photo identification to enter the building. Because of access restrictions, visitors will not be admitted beyond the immediate entrance area at the Constitution Avenue entrance more than 30 minutes before the hearing starts. For information about having your name placed on the building access list to attend the hearing, see the **FOR FURTHER INFORMATION CONTACT** section of this preamble.

The rules of 26 CFR 601.601(a)(3) apply to the hearing. Persons who wish to present oral comments at the hearing must submit written comments and an outline of the topics to be discussed and the time to be devoted to each topic (signed original and eight copies (8) copies) by June 27, 2005. A period of 10 minutes will be allotted to each person for making comments. An agenda showing the scheduling of speakers will be prepared after the deadline for receiving outlines has passed. Copies of the agenda will be available free of charge at the hearing.

Drafting Information

The principal author of these regulations is William Blodgett, Office of Associate Chief Counsel (Passthroughs and Special Industries), IRS. However, other personnel from the IRS and Treasury Department participated in their development.

List of Subjects in 26 CFR Part 48

Excise taxes, Reporting and recordkeeping requirements.

Proposed Amendments to the Regulations

Accordingly, 26 CFR part 48 is proposed to be amended as follows:

PART 48—MANUFACTURERS AND RETAILERS EXCISE TAXES

Paragraph 1. The authority citation for part 48 continues to read, in part, as follows:

Authority: 26 U.S.C. 7805 * * *

Par. 2. In § 48.4082–1, paragraphs (d) and (e)(2) are revised to read as follows:

§ 48.4082–1 Diesel fuel and kerosene; exemption for dyed fuel.

* * * * *

(d) [The text of this proposed paragraph (d) is the same as the text of § 48.4082–1T(d) published elsewhere in this issue of the **Federal Register**].

(e) * * *

(e)(2) [The text of this proposed paragraph (e)(2) is the same as the text of § 48.4082–1T(e)(2) published elsewhere in this issue of the **Federal Register**].

Par. 3. Section 48.4101–1 is amended by revising paragraph (h)(3)(iv) to read as follows:

§ 48.4101–1 Taxable Fuel; registration.

* * * * *

(h) * * *

(3) * * *

(iv) [The text of this proposed paragraph (h)(3)(iv) is the same as the text of § 48.4101–1T(h)(3)(iv) published elsewhere in this issue of the **Federal Register**].

Cono R. Namorato,

Acting Deputy Commissioner for Services and Enforcement.

[FR Doc. 05–8235 Filed 4–25–05; 8:45 am]

BILLING CODE 4830–01–P

DEPARTMENT OF THE TREASURY

31 CFR Part 103

RIN 1506–AA81

Financial Crimes Enforcement Network; Amendment to the Bank Secrecy Act Regulations—Imposition of Special Measure Against Multibanka

AGENCY: Financial Crimes Enforcement Network (FinCEN), Treasury.

ACTION: Notice of proposed rulemaking.

SUMMARY: FinCEN is issuing this notice of proposed rulemaking to impose a special measure against joint stock company Multibanka (Multibanka) as a financial institution of primary money laundering concern, pursuant to the authority contained in 31 U.S.C. 5318A.

DATES: Written comments on the notice of proposed rulemaking must be submitted on or before May 26, 2005.

ADDRESSES: You may submit comments, identified by RIN 1506–AA81, by any of the following methods:

- *Federal e-rulemaking Portal: http://www.regulations.gov.* Follow the instructions for submitting comments.
- *E-mail: regcomments@fincen.treas.gov.* Include RIN 1506–AA81 in the subject line of the message.
- *Mail:* FinCEN, P.O. Box 39, Vienna, VA 22183. Include RIN 1506–AA81 in the body of the text.

Instructions: It is preferable for comments to be submitted by electronic mail because paper mail in the

Washington, DC, area may be delayed. Please submit comments by one method only. All submissions received must include the agency name and the Regulatory Information Number (RIN) for this rulemaking. All comments received will be posted without change to *http://www.fincen.gov*, including any personal information provided. Comments may be inspected at FinCEN between 10 a.m. and 4 p.m. in the FinCEN reading room in Washington, DC. Persons wishing to inspect the comments submitted must request an appointment by telephone at (202) 354–6400 (not a toll-free number).

FOR FURTHER INFORMATION CONTACT: Regulatory Policy and Programs Division, FinCEN, (800) 949–2732.

SUPPLEMENTARY INFORMATION:

I. Background

A. Statutory Provisions

On October 26, 2001, the President signed into law the Uniting and Strengthening America by Providing Appropriate Tools Required to Intercept and Obstruct Terrorism Act of 2001 (the USA PATRIOT Act), Public Law 107–56. Title III of the USA PATRIOT Act amends the anti-money laundering provisions of the Bank Secrecy Act (BSA), codified at 12 U.S.C. 1829b, 12 U.S.C. 1951–1959, and 31 U.S.C. 5311–5314, 5316–5332, to promote the prevention, detection, and prosecution of international money laundering and the financing of terrorism. Regulations implementing the BSA appear at 31 CFR part 103. The authority of the Secretary of the Treasury (''the Secretary'') to administer the BSA and its implementing regulations has been delegated to the Director of FinCEN.[1]

Section 311 of the USA PATRIOT Act (''section 311'') added section 5318A to the BSA, granting the Secretary the authority, upon finding that reasonable grounds exist for concluding that a foreign jurisdiction, institution, class of transactions, or type of account is of ''primary money laundering concern,'' to require domestic financial institutions and financial agencies to take certain ''special measures'' against the primary money laundering concern. Section 311 identifies factors for the Secretary to consider and Federal agencies to consult before the Secretary may conclude that a jurisdiction, institution, class of transactions, or type of account is of primary money laundering concern. The statute also provides similar procedures, including factors and consultation requirements, for selecting the specific special measures to be imposed against the primary money laundering concern.

Taken as a whole, section 311 provides the Secretary with a range of options that can be adapted to target specific money laundering concerns most effectively. These options give the Secretary the authority to bring additional pressure on those jurisdictions and institutions that pose money laundering threats. Through the imposition of various special measures, the Secretary can gain more information about the concerned jurisdictions, institutions, transactions, and accounts; can more effectively monitor the respective jurisdictions, institutions, transactions, and accounts; and/or can protect U.S. financial institutions from involvement with jurisdictions, institutions, transactions, or accounts that pose a money laundering concern.

Before making a finding that reasonable grounds exist for concluding that a foreign financial institution is of primary money laundering concern, the Secretary is required by the Bank Secrecy Act to consult with both the Secretary of State and the Attorney General. The Secretary also is required by section 311 to consider ''such information as the Secretary determines to be relevant, including the following potentially relevant factors:''

- The extent to which such financial institution is used to facilitate or promote money laundering in or through the jurisdiction;
- The extent to which such financial institution is used for legitimate business purposes in the jurisdiction; and
- The extent to which the finding that the institution is of primary money laundering concern is sufficient to ensure, with respect to transactions involving the institution operating in the jurisdiction, that the purposes of the BSA continue to be fulfilled, and to guard against international money laundering and other financial crimes.

If the Secretary determines that a foreign financial institution is of primary money laundering concern, the Secretary must determine the appropriate special measure(s) to address the specific money laundering risks. Section 311 provides a range of special measures that can be imposed individually, jointly, in any combination, and in any sequence.[2] The Secretary's imposition of special measures requires additional consultations to be made and factors to be considered. The statute requires the Secretary to consult with appropriate Federal agencies and other interested parties[3] and to consider the following specific factors:

- Whether similar action has been or is being taken by other nations or multilateral groups;
- Whether the imposition of any particular special measure would create a significant competitive disadvantage, including any undue cost or burden associated with compliance, for financial institutions organized or licensed in the United States;
- The extent to which the action or the timing of the action would have a significant adverse systemic impact on the international payment, clearance, and settlement system, or on legitimate business activities involving the particular institution; and
- The effect of the action on United States national security and foreign policy.[4]

B. Multibanka

In this rulemaking, FinCEN proposes the imposition of the fifth special measure (31 U.S.C. 5318A(b)(5)) against Multibanka, a commercial bank in Latvia. The fifth special measure prohibits or conditions the opening or maintaining of correspondent or payable-through accounts for the designated institution by U.S. financial institutions. This special measure may be imposed only through the issuance of a regulation.

Multibanka is headquartered in Riga, the capital of the Republic of Latvia.

[1] Therefore, references to the authority of the Secretary of the Treasury under section 311 of the USA PATRIOT Act apply equally to the Director of FinCEN.

[2] Available special measures include requiring: (1) Recordkeeping and reporting of certain financial transactions; (2) collection of information relating to beneficial ownership; (3) collection of information relating to certain payable-through accounts; (4) collection of information relating to certain correspondent accounts; and (5) prohibition or conditions on the opening or maintaining of correspondent or payable-through accounts. 31 U.S.C. 5318A (b)(1)–(5). For a complete discussion of the range of possible countermeasures, see the notice at 68 FR 18917 (April 17, 2003), which proposed the imposition of special measures against Nauru.

[3] Section 5318A(a)(4)(A) requires the Secretary to consult with the Chairman of the Board of Governors of the Federal Reserve System, any other appropriate Federal banking agency, the Secretary of State, the Securities and Exchange Commission, the Commodity Futures Trading Commission, the National Credit Union Administration, and, in the sole discretion of the Secretary, ''such other agencies and interested parties as the Secretary may find to be appropriate.'' The consultation process must also include the Attorney General if the Secretary is considering prohibiting or imposing conditions on domestic financial institutions maintaining correspondent account relationships with the designated entity.

[4] Classified information used in support of a section 311 finding and measure(s) may be submitted by the Treasury to a reviewing court ex parte and in camera. *See* section 376 of the Intelligence Authorization Act for Fiscal Year 2004, Pub. L. 108–177 (amending 31 U.S.C. 5318A by adding new paragraph (f)).

Multibanka is the oldest commercial bank in Latvia and is among the smaller of Latvia's 23 banks, reported to have approximately $269 million in assets and 150 employees. Its predecessor entity, created in 1988, was the Latvian branch of a Soviet bank that was nationalized in 1991. The resulting entity became the Foreign Operations Department of the Bank of Latvia. Three years later, in April 1994, the Department of Foreign Operations was privatized and became Multibanka. In 1995, Multibanka merged with joint stock company LNT Skonto Banka, increasing its assets and resources. Multibanka has four foreign offices in Russia, Ukraine, and Belarus; five domestic branches; and one leasing subsidiary, Multilizings.

Multibanka offers confidential banking services and numbered accounts for non-Latvian customers. Reports substantiate that a significant portion of its business involves wiring money out of the country on behalf of its accountholders.

The bank has been suspected of being used by Russian and other shell companies to facilitate financial crime. A common way for criminals to disguise illegal proceeds is to establish shell companies in countries known for lax enforcement of anti-money laundering laws. The criminals use the shell companies to conceal the true ownership of the accounts and assets, which is ideal for the laundering of funds. One reported scheme works in the following way: Suspect shell companies move money into their accounts at Multibanka. The money is designated as payment for goods and services to other shell companies or individuals, but is deposited into the originating company's account with Multibanka. Multibanka later transfers the funds to destinations outside Latvia upon the instructions of the originating shell companies. These transactions are suspected of being used to facilitate illegal transfers of money out of other countries and tax evasion. Due to concerns about transactions flowing through Multibanka involving suspected shell corporations, some U.S. financial institutions have already terminated correspondent relationships with Multibanka.

FinCEN also has reason to believe that certain criminals use accounts at Multibanka to facilitate financial fraud schemes. Specifically, one individual involved in financial fraud reported having success in carrying out large-sum transactions through his account at Multibanka. FinCEN is also aware that an individual arrested in 2004 for his involvement in an access device fraud ring used an account at Multibanka to launder proceeds of his criminal activities.

C. Latvia

Latvia's role as a regional financial center, the number of commercial banks with respect to its size, and those banks' sizeable non-resident deposit base continue to pose significant money laundering risks. Latvian authorities recently have sought tighter legislative controls, regulations, and ''best practices'' designed to fight financial crime. Despite Latvia's recent efforts and amended laws, however, money laundering in Latvia remains a concern. Latvia's geographical position, situated by the Baltic Sea and bordering Russia, Estonia, Belarus, and Lithuania, make it an attractive transit country for both legitimate and illegitimate trade. Sources of laundered money in these countries include counterfeiting, corruption, arms trafficking, contraband smuggling, and other crimes. It is believed that most of Latvia's narcotics trafficking is conducted by organized crime groups that began with cigarette and alcohol smuggling and then progressed to narcotics.

Of particular concern is that many of Latvia's institutions do not appear to serve the Latvian community, but instead serve suspect foreign private shell companies. As previously discussed, criminals frequently launder money through the use of shell companies. Similarly, a large number of foreign depositors or a large percentage of assets in foreign funds may indicate that a bank is being used to launder money or evade taxes. Latvia's 23 banks held approximately $5 billion in nonresident deposits at the end of 2004, mainly from Russia and other parts of the former Soviet Union. These deposits accounted for more than half of all the money held in Latvian banks.

Despite growing efforts by the Latvian government for reform, material weaknesses in the implementation and enforcement of its anti-money laundering laws exist. To date there have been no forfeitures of illicit proceeds based on money laundering. In addition, suspicious activity reporting thresholds remain high, at nearly 40,000 LATS (about $80,000 dollars) for most transactions, which fails to capture significant activity below this threshold. Furthermore, since 2004, only two money laundering cases have been tried in Latvian courts, with both cases ending in acquittals.

Latvia has a general reputation for permissive bank secrecy laws and lax enforcement, as evidenced by multiple non-Latvian Web sites that offer to establish offshore accounts with Latvian banks in general, and Multibanka, in particular. The sites claim that Latvian banks offer secure and confidential banking, especially through online banking services. FinCEN also has reason to believe that certain Latvian financial institutions are used by online criminal groups, frequently referred to as ''carding'' groups, to launder the proceeds of their illegal activities. Such groups consist of computer hackers and other criminals that use the Internet as a means of perpetrating credit card fraud, identity theft, and related financial crimes. One of the primary concerns of carding group members is their ability to convert the funds obtained through fraud into cash. Anonymity is another major consideration for online criminals. Reports substantiate that in order to support these two needs, a significant number of carders have turned to Latvian financial institutions for the safe and quasi-anonymous cashing out of their illegal proceeds. FinCEN has additional reason to believe that certain Latvian financial institutions allow non-citizens to open accounts over the Internet, and offer anonymous ATM cards with high or no withdrawal limits.

Latvia has taken steps to address money laundering risks and corruption. In February 2004, a new anti-money laundering law removed some barriers that impeded the prosecution of money laundering. The law expanded the categories of financial institutions covered by reporting requirements to include auditors, lawyers, and high-value dealers, as well as credit institutions. The law also recognizes terrorism as a predicate offense for money laundering.

Recognizing the existence of widespread official corruption, the Latvian government, in January 2002, established the Anti-Corruption Bureau (ACB), an independent agency to combat public corruption by investigating and prosecuting Latvian officials involved in unlawful activities. In 2004, the ACB reviewed over 700 cases of suspected public corruption. Although this initiative is encouraging, FinCEN considers the high levels of corruption in Latvia's Government and security forces an impediment both to its international information-sharing efforts and to the fair enforcement of Latvia's anti-money laundering laws.

According to the International Narcotics Strategy Control Report (INSCR) published in March 2005 by the U.S. Department of State, Latvia's banking system is vulnerable to the laundering of narcotics proceeds. The report designates Latvia a jurisdiction of

''primary concern.'' ''Jurisdictions of Primary Concern'' in INSCR are jurisdictions that are identified as ''major money laundering countries,'' that is, countries ''whose financial institutions engage in currency transactions involving significant amounts of proceeds from international narcotics trafficking.''

II. Imposition of Special Measure Against Multibanka as a Financial Institution of Primary Money Laundering Concern

A. Finding

Based on a review and analysis of relevant information, consultations with relevant Federal agencies and departments, and after consideration of the factors enumerated in section 311, the Secretary, through his delegate, the Director of FinCEN, has determined that reasonable grounds exist for concluding that Multibanka is a financial institution of primary money laundering concern based on a number of factors, including:

1. The Extent to Which Multibanka Has Been Used to Facilitate or Promote Money Laundering in or Through the Jurisdiction

FinCEN has determined, based upon a variety of sources, that Multibanka is being used to facilitate or promote money laundering and other financial crimes. The proceeds of illicit activity have been transferred by shell companies with no apparent legitimate business purpose to or through correspondent accounts held by Multibanka at U.S. financial institutions. As already described above, many shell companies are suspected of moving money illegally or laundering illegal proceeds through their accounts at Multibanka, followed immediately by orders that Multibanka transfer the funds out of the country. These shell companies repeatedly used accounts at Multibanka to engage in a pattern of behavior indicative of money laundering. For example, in a one-month period during 2004, one U.S. bank received over 2,000 payment instructions involving $68 million associated with eight suspected shell companies with accounts at Multibanka.

As stated above, FinCEN has determined that certain individuals view Multibanka as an excellent bank for conducting financial fraud schemes and to launder the proceeds of their criminal activity. In fact, one individual involved in such schemes reported that he successfully moved large sums through his Multibanka account.

2. The Extent to Which Multibanka Is Used for Legitimate Business Purposes in the Jurisdiction

It is difficult to determine the extent to which Multibanka is used for legitimate purposes. As already stated, inordinately high percentages of foreign assets or depositors and the use of a bank by shell companies are both indicators of possible money laundering activities. A significant portion of Multibanka's business is with shell companies, many from the former Soviet Bloc countries. FinCEN has reason to believe that the bank has a reputation for operating as an offshore bank that primarily services foreign shell companies. Multibanka is an important banking resource for such offshore companies, allegedly allowing them to access the international financial system to pursue illicit financial activities. FinCEN believes that any legitimate use of Multibanka is significantly outweighed by its use to promote or facilitate money laundering and other financial crimes. Nevertheless, FinCEN specifically solicits comments on the impact of the proposed special measure upon any legitimate transactions conducted with Multibanka involving, in particular, U.S. persons or entities, foreign persons, entities, and governments, and multilateral organizations doing legitimate business with persons, entities, or the government of the jurisdiction or operating in the jurisdiction.

3. The Extent to Which Such Action Is Sufficient To Ensure, With Respect to Transactions Involving Multibanka, That the Purposes of the BSA Continue To Be Fulfilled, and To Guard Against International Money Laundering and Other Financial Crimes

As detailed above, FinCEN has reasonable grounds to conclude that Multibanka is being used to promote or facilitate international money laundering. Currently, there are no protective measures that specifically target Multibanka. Thus, finding Multibanka to be a financial institution of primary money laundering concern and prohibiting the maintenance of correspondent accounts for that institution are necessary steps to prevent suspect accountholders at Multibanka from accessing the U.S. financial system to facilitate money laundering or to engage in any other criminal purpose. The proposed special measure would not only prohibit U.S. financial institutions from maintaining direct correspondent relationships with Multibanka, but also would require them to take reasonable steps to prevent indirect use of correspondent services by Multibanka through intermediary financial institutions. The finding of primary money laundering concern and the imposition of the special measure also will bring criminal conduct occurring at or through Multibanka to the attention of the international financial community and, it is hoped, further limit the bank's ability to be used for money laundering or for other criminal purposes.

B. Imposition of Special Measure

As a result of the finding that Multibanka is a financial institution of primary money laundering concern, and based upon the additional consultations and the consideration of relevant factors, the Secretary, through his delegate, the Director of FinCEN, has determined that reasonable grounds exist for the imposition of the special measure authorized by 31 U.S.C. 5318A(b)(5).[5] That special measure authorizes the prohibition of opening or maintaining correspondent accounts[6] by any domestic financial institution or agency for or on behalf of a targeted financial institution. A discussion of the additional section 311 factors relevant to imposing this particular special measure follows.

1. Whether Similar Actions Have Been or Will Be Taken by Other Nations or Multilateral Groups Against Multibanka

Other countries and multilateral groups have not, as yet, taken action similar to that proposed in this rulemaking to prohibit domestic financial institutions and agencies from opening or maintaining a correspondent account for or on behalf of Multibanka, and to require those domestic financial institutions and agencies to screen their correspondents for nested correspondent accounts held by Multibanka. FinCEN encourages other countries to take similar action based on the findings contained in this rulemaking. In the absence of similar action by other countries, it is even more imperative that the fifth special measure be imposed in order to prevent access by Multibanka to the U.S. financial system.

[5] In connection with this section, FinCEN consulted with staff of the Federal functional regulators, the Department of Justice, and the State Department.

[6] For purposes of the proposed rule, a correspondent account is defined as an account established to receive deposits from, or make payments or other disbursements on behalf of, a foreign bank, or handle other financial transactions related to the foreign bank.

2. Whether the Imposition of the Fifth Special Measure Would Create a Significant Competitive Disadvantage, Including Any Undue Cost or Burden Associated With Compliance, for Financial Institutions Organized or Licensed in the United States

The fifth special measure sought to be imposed by this rulemaking would prohibit covered financial institutions from opening and maintaining correspondent accounts for, or on behalf of, Multibanka. As a corollary to this measure, covered financial institutions also would be required to take reasonable steps to apply special due diligence, as set forth below, to all of their correspondent accounts to help ensure that no such account is being used indirectly to provide services to Multibanka. FinCEN does not expect the burden associated with these requirements to be significant, given its understanding that few U.S. banks currently maintain correspondent accounts for Multibanka. There is a minimal burden involved in transmitting a one-time notice to all correspondent accountholders concerning the prohibition on indirectly providing services to Multibanka. In addition, all U.S. financial institutions currently apply some degree of due diligence to the transactions or accounts subject to sanctions administered by the Office of Foreign Assets Control (OFAC) of the Department of the Treasury. As explained in more detail in the section-by-section analysis below, financial institutions should be able to easily adapt their current screening procedures for OFAC sanctions to comply with this special measure. Thus, the special due diligence that would be required by this rulemaking is not expected to impose a significant additional burden upon U.S. financial institutions.

3. The Extent to Which the Proposed Action or Timing of the Action Will Have a Significant Adverse Systemic Impact on the International Payment, Clearance, and Settlement System, or on Legitimate Business Activities of Multibanka

This proposed rulemaking targets Multibanka specifically; it does not target a class of financial transactions (such as wire transfers) or a particular jurisdiction. Multibanka is not a major participant in the international payment system and is not relied upon by the international banking community for clearance or settlement services. Thus, the imposition of the fifth special measure against Multibanka will not have a significant adverse systemic impact on the international payment, clearance, and settlement system. In light of the reasons for imposing this special measure, FinCEN does not believe that it will impose an undue burden on legitimate business activities, and notes that the presence of approximately 15 larger banks in Latvia will alleviate the burden on legitimate business activities within that jurisdiction.

4. The Effect of the Proposed Action on U.S. National Security and Foreign Policy

The exclusion from the U.S. financial system of banks that serve as conduits for significant money laundering activity and other financial crimes enhances national security by making it more difficult for money launderers and other criminals to access the substantial resources of the U.S. financial system. In addition, the imposition of the fifth special measure against Multibanka would complement the U.S. Government's overall foreign policy strategy of making entry into the U.S. financial system more difficult for high-risk financial institutions located in jurisdictions that have lax anti-money laundering controls. More generally, the imposition of the fifth special measure would complement diplomatic actions undertaken by both the Latvian and United States Governments to expose and disrupt international money laundering and other financial crimes.

Therefore, after conducting the required consultations and weighing the relevant factors, FinCEN has determined that reasonable grounds exist for concluding that Multibanka is a financial institution of primary money laundering concern and for imposing the special measure authorized by 31 U.S.C. 5318A(b)(5).

III. Section-by-Section Analysis

The proposed rule would prohibit covered financial institutions from establishing, maintaining, administering, or managing in the United States any correspondent account for, or on behalf of, Multibanka. As a corollary to this prohibition, covered financial institutions would be required to apply special due diligence to their correspondent accounts to guard against their indirect use by Multibanka. At a minimum, that special due diligence must include two elements. First, a covered financial institution must notify its correspondent accountholders that they may not provide Multibanka with access to the correspondent account maintained at the covered financial institution. Second, a covered financial institution must take reasonable steps to identify any indirect use of its correspondent accounts by Multibanka, to the extent that such indirect use can be determined from transactional records maintained by the covered financial institution in the normal course of business. A covered financial institution must take a risk-based approach when deciding what, if any, other due diligence measures it should adopt to guard against the indirect use of its correspondent accounts by Multibanka, based on risk factors such as the type of services it offers and geographic locations of its correspondents.

A. 103.191(a)—Definitions

1. Correspondent Account

Section 103.191(a)(1) defines the term ''correspondent account'' by reference to the definition contained in 31 CFR 103.175(d)(1)(ii). Section 103.175(d)(1)(ii) defines a correspondent account to mean an account established to receive deposits from, or make payments or other disbursements on behalf of, a foreign bank, or to handle other financial transactions related to the foreign bank.

In the case of a U.S. depository institution, this broad definition would include most types of banking relationships between a U.S. depository institution and a foreign bank, including payable-through accounts.

In the case of securities broker-dealers, futures commission merchants, introducing brokers, and investment companies that are open-end companies (mutual funds), a correspondent account would include any account that permits the foreign bank to engage in (1) trading in securities and commodity futures or options, (2) funds transfers, or (3) other types of financial transactions.

FinCEN is using the same definition for purposes of the proposed rule as that established in the final rule implementing sections 313 and 319(b) of the USA PATRIOT Act,[7] except that the term is being expanded to cover such accounts maintained by mutual funds, futures commission merchants, and introducing brokers.

2. Covered Financial Institution

Section 103.191(a)(2) of the proposed rule defines covered financial institution to mean all of the following: Any insured bank (as defined in section 3(h) of the Federal Deposit Insurance Act (12 U.S.C. 1813(h)); a commercial bank or trust company; a private banker; an agency or branch of a foreign bank in the United States; a credit union; a thrift institution; a corporation acting

[7] *See* 67 FR 60562 (Sept. 26, 2002), codified at 31 CFR 103.175(d)(1).

under section 25A of the Federal Reserve Act (12 U.S.C. 611 *et seq.*); a broker or dealer registered or required to register with the SEC under the Securities Exchange Act of 1934 (15 U.S.C. 78a *et seq.*); a futures commission merchant or an introducing broker registered, or required to register, with the CFTC under the Commodity Exchange Act (7 U.S.C. 1 *et seq.*); and an investment company (as defined in section 3 of the Investment Company Act of 1940 (15 U.S.C. 80a–3)) that is an open-end company (as defined in section 5 of the Investment Company Act of 1940 (15 U.S.C. 80a–5)) that is registered, or required to register, with the SEC under section 8 of the Investment Company Act of 1940 (15 U.S.C. 80a–8).

3. Multibanka

Section 103.191(a)(3) of the proposed rule defines Multibanka to include all branches, offices, and subsidiaries of Multibanka operating in Latvia or in any other jurisdiction. Multilizings, and any of its branches, is included in the definition. FinCEN will provide information regarding the existence or establishment of any other subsidiaries as it becomes available. Nevertheless, covered financial institutions should take commercially reasonable measures to determine whether a customer is a subsidiary of Multibanka.

B. 103.192(b)—Requirements for Covered Financial Institutions

For purposes of complying with the proposed rule's prohibition on the opening or maintaining of correspondent accounts for, or on behalf of, Multibanka, FinCEN expects that a covered financial institution will take such steps that a reasonable and prudent financial institution would take to protect itself from loan fraud or other fraud or loss based on misidentification of a person's status.

1. Prohibition on Direct Use of Correspondent Accounts

Section 103.191(b)(1) of the proposed rule prohibits all covered financial institutions from establishing, maintaining, administering, or managing a correspondent account in the United States for, or on behalf of, Multibanka. The prohibition would require all covered financial institutions to review their account records to ensure that they maintain no accounts directly for, or on behalf of, Multibanka.

2. Special Due Diligence of Correspondent Accounts To Prohibit Indirect Use

As a corollary to the prohibition on maintaining correspondent accounts directly for Multibanka, section 103.191(b)(2) requires a covered financial institution to apply special due diligence to its correspondent accounts that is reasonably designed to guard against their indirect use by Multibanka. At a minimum, that special due diligence must include notifying correspondent accountholders that they may not provide Multibanka with access to the correspondent account maintained at the covered financial institution. For example, a covered financial institution may satisfy this requirement by transmitting the following notice to all of its correspondent accountholders:

Notice: Pursuant to U.S. regulations issued under section 311 of the USA PATRIOT Act, 31 CFR 103.191, we are prohibited from establishing, maintaining, administering or managing a correspondent account for, or on behalf of, joint stock company Multibanka (Multibanka) or any of its subsidiaries, including Multilizings. The regulations also require us to notify you that you may not provide Multibanka or any of its subsidiaries with access to the correspondent account you hold at our financial institution. If we become aware that Multibanka or any of its subsidiaries is indirectly using the correspondent account you hold at our financial institution, we will be required to take appropriate steps to block such access, including terminating your account.

The purpose of the notice requirement is to help ensure cooperation from correspondent accountholders in denying Multibanka access to the U.S. financial system, as well as to increase awareness within the international financial community of the risks and deficiencies of Multibanka. However, FinCEN does not require or expect a covered financial institution to obtain a certification from its correspondent accountholders that indirect access will not be provided in order to comply with this notice requirement. Instead, methods of compliance with the notice requirement could include, for example, transmitting a one-time notice by mail, fax, or e-mail to a covered financial institution's correspondent account customers informing them that they may not provide Multibanka with access to the covered financial institution's correspondent account, or including such information in the next regularly occurring transmittal from the covered financial institution to its correspondent accountholders. FinCEN specifically solicits comments on the appropriate form, scope, and timing of the notice that would be required under the rule.

A covered financial institution also would be required under this rulemaking to take reasonable steps to identify any indirect use of its correspondent accounts by Multibanka, to the extent that such indirect use can be determined from transactional records maintained by the covered financial institution in the normal course of business. For example, a covered financial institution would be expected to apply an appropriate screening mechanism to be able to identify a funds transfer order that on its face listed Multibanka as the originator's or beneficiary's financial institution, or otherwise referenced Multibanka. An appropriate screening mechanism could be the mechanism used by a covered financial institution to comply with sanctions programs administered by OFAC. FinCEN specifically solicits comments on the requirement under the proposed rule that a covered financial institution take reasonable steps to screen its correspondent accounts in order to identify any indirect use of such accounts by Multibanka.

Notifying its correspondent accountholders and taking reasonable steps to identify any indirect use of its correspondent accounts by Multibanka in the manner discussed above are the minimum due diligence requirements under the proposed rule. Beyond these minimum steps, a covered financial institution should adopt a risk-based approach for determining what, if any, other due diligence measures it should implement to guard against the indirect use of its correspondents accounts by Multibanka, based on risk factors such as the type of services it offers and the geographic locations of its correspondent accountholders.

A covered financial institution that obtains knowledge that a correspondent account is being used by a foreign bank to provide indirect access to Multibanka must take all appropriate steps to block such indirect access, including, where necessary, terminating the correspondent account. A covered financial institution may afford the foreign bank a reasonable opportunity to take corrective action prior to terminating the correspondent account. Should the foreign bank refuse to comply, or if the covered financial institution cannot obtain adequate assurances that the account will not be available to Multibanka, the covered financial institution must terminate the account within a commercially reasonable time. This means that the covered financial institution should not permit the foreign bank to establish any

new positions or execute any transactions through the account, other than those necessary to close the account. A covered financial institution may reestablish an account closed under the proposed rule if it determines that the account will not be used to provide banking services indirectly to Multibanka. FinCEN specifically solicits comment on the requirement under the proposed rule that a covered financial institution block indirect access to Multibanka once such indirect access is identified.

3. Reporting Not Required

Section 103.191(b)(3) of the proposed rule clarifies that the rule does not impose any reporting requirement upon any covered financial institution that is not otherwise required by applicable law or regulation. A covered financial institution must, however, document its compliance with the requirement that it notify its correspondent accountholders that they may not provide Multibanka with access to the correspondent account maintained at the covered financial institution.

IV. Request for Comments

FinCEN invites comments on all aspects of the proposal to prohibit the opening or maintaining of correspondent accounts for or on behalf of Multibanka, and specifically invites comments on the following matters:

1. The appropriate form, scope, and timing of the notice to correspondent accountholders that would be required under the rule;
2. The appropriate scope of the proposed requirement for a covered financial institution to take reasonable steps to identify any indirect use of its correspondent accounts by Multibanka;
3. The appropriate steps a covered financial institution should take once it identifies an indirect use of one of its correspondent accounts by Multibanka; and
4. The impact of the proposed special measure upon any legitimate transactions conducted with Multibanka by U.S. persons and entities, foreign persons, entities, and governments, and multilateral organizations doing legitimate business with persons, entities, or Latvia, or operating a legitimate business in Latvia.

V. Regulatory Flexibility Act

It is hereby certified that this proposed rule will not have a significant economic impact on a substantial number of small entities. FinCEN understands that Multibanka maintains correspondent accounts with few institutions in the United States. Thus, the prohibition on maintaining such accounts will not have a significant impact on a substantial number of small entities. In addition, all U.S. persons, including U.S. financial institutions, should currently exercise some degree of due diligence in order to comply with U.S. sanctions programs administered by OFAC, which can easily be modified to monitor for the direct and indirect use of correspondent accounts by Multibanka. Thus, the special due diligence that would be required by this rulemaking—*i.e.*, the one-time transmittal of notice to correspondent accountholders, and the screening of transactions to identify any indirect use of correspondent accounts—is not expected to impose a significant additional economic burden upon small U.S. financial institutions. FinCEN invites comments from members of the public who believe there will be a significant economic impact on small entities.

VI. Paperwork Reduction Act

The collection of information contained in this proposed rule is being submitted to the Office of Management and Budget for review in accordance with the Paperwork Reduction Act of 1995 (44 U.S.C. 3507(d)). Comments on the collection of information should be sent (preferably by fax (202–395–6974)) to Desk Officer for the Department of the Treasury, Office of Information and Regulatory Affairs, Office of Management and Budget, Paperwork Reduction Project (1506), Washington, DC 20503 (or by e-mail to *Alexander_T._Hunt@omb.eop.gov*), with a copy to FinCEN by mail or e-mail at the addresses previously specified. Comments on the collection of information should be received by May 26, 2005. In accordance with the requirements of the Paperwork Reduction Act of 1995, 44 U.S.C. 3506(c)(2)(A), and its implementing regulations, 5 CFR 1320, the following information concerning the collection of information as required by 31 CFR 103.191 is presented to assist those persons wishing to comment on the information collection.

The collection of information in this proposed rule is in 31 CFR 103.191(b)(2)(i) and 31 CFR 103.191(b)(3)(i). The disclosure requirement in 31 CFR 103.191(b)(2)(i) is intended to ensure cooperation from correspondent accountholders in denying Multibanka access to the U.S. financial system, as well as to increase awareness within the international financial community of the risks and deficiencies of Multibanka. The information required to be maintained by 31 CFR 103.191(b)(3)(i) will be used by Federal agencies and certain self-regulatory organizations to verify compliance by covered financial institutions with the provisions of 31 CFR 103.191. The class of financial institutions affected by the disclosure requirement is identical to the class of financial institutions affected by the recordkeeping requirement. The collection of information is mandatory.

Description of Affected Financial Institutions: Banks, broker-dealers in securities, futures commission merchants and introducing brokers, and mutual funds maintaining correspondent accounts.

Estimate Number of Affected Financial Institutions: 5,000.

Estimated Average Annual Burden Hours Per Affected Financial Institution: The estimated average burden associated with the collection of information in this proposed rule is one hour per affected financial institution.

Estimated Total Annual Burden: 5,000 hours.

FinCEN specifically invites comments on: (a) Whether the proposed collection of information is necessary for the proper performance of the mission of FinCEN, including whether the information shall have practical utility; (b) the accuracy of FinCEN's estimate of the burden of the proposed collection of information; (c) ways to enhance the quality, utility, and clarity of the information required to be maintained; (d) ways to minimize the burden of the required collection of information, including through the use of automated collection techniques or other forms of information technology; and (e) estimates of capital or start-up costs and costs of operation, maintenance, and purchase of services to maintain the information.

VII. Executive Order 12866

This proposed rule is not a significant regulatory action for purposes of Executive Order 12866, ''Regulatory Planning and Review.''

List of Subjects in 31 CFR Part 103

Administrative practice and procedure, Banks and banking, Brokers, Counter-money laundering, Counter-terrorism, and Foreign banking.

Authority and Issuance

For the reasons set forth in the preamble, part 103 of title 31 of the Code of Federal Regulations is proposed to be amended as follows:

PART 103—FINANCIAL RECORDKEEPING AND REPORTING OF CURRENCY AND FINANCIAL TRANSACTIONS

1. The authority citation for part 103 is revised to read as follows:

Authority: 12 U.S.C. 1829b and 1951–1959; 31 U.S.C. 5311–5314, 5316–5332; title III, secs. 311, 312, 313, 314, 319, 326, 352, Pub. L. 107–56, 115 Stat. 307.

2. Subpart I of part 103 is proposed to be amended by adding new § 103.191, as follows:

§ 103.191 Special measures against Multibanka.

(a) *Definitions.* For purposes of this section:

(1) *Correspondent account* has the same meaning as provided in § 103.175(d)(1)(ii).

(2) *Covered financial institution* has the same meaning as provided in § 103.175(f)(2) and also includes:

(i) A futures commission merchant or an introducing broker registered, or required to register, with the Commodity Futures Trading Commission under the Commodity Exchange Act (7 U.S.C. 1 *et seq.*); and

(ii) An investment company (as defined in section 3 of the Investment Company Act of 1940 (15 U.S.C. 80a–3)) that is an open-end company (as defined in section 5 of the Investment Company Act (15 U.S.C. 80a–5)) and that is registered, or required to register, with the Securities and Exchange Commission under section 8 of the Investment Company Act (15 U.S.C. 80a–8).

(3) *Multibanka* means any branch, office, or subsidiary of joint stock company Multibanka operating in Latvia or any other jurisdiction.

(4) *Subsidiary* means a company of which more than 50 percent of the voting stock or analogous equity interest is owned by another company.

(b) *Requirements for covered financial institutions*—(1) *Prohibition on direct use of correspondent accounts.* A covered financial institution shall terminate any correspondent account that is established, maintained, administered, or managed in the United States for, or on behalf of, Multibanka.

(2) *Special due diligence of correspondent accounts to prohibit indirect use.* (i) A covered financial institution shall apply special due diligence to its correspondent accounts that is reasonably designed to guard against their indirect use by Multibanka. At a minimum, that special due diligence must include:

(A) Notifying correspondent accountholders that they may not provide Multibanka with access to the correspondent account maintained at the covered financial institution; and

(B) Taking reasonable steps to identify any indirect use of its correspondent accounts by Multibanka to the extent that such indirect use can be determined from transactional records maintained in the covered financial institution's normal course of business.

(ii) A covered financial institution shall take a risk-based approach when deciding what, if any, other due diligence measures it should adopt to guard against the indirect use of its correspondent accounts by Multibanka.

(iii) A covered financial institution that obtains knowledge that a correspondent account is being used by the foreign bank to provide indirect access to Multibanka, shall take all appropriate steps to block such indirect access, including, where necessary, terminating the correspondent account.

(3) *Recordkeeping and reporting.* (i) A covered financial institution is required to document its compliance with the notice requirement set forth in paragraph (b)(2)(i)(A) of this section.

(ii) Nothing in this section shall require a covered financial institution to report any information not otherwise required to be reported by law or regulation.

Dated: April 21, 2005.

William J. Fox,

Director, Financial Crimes Enforcement Network.

[FR Doc. 05–8279 Filed 4–21–05; 1:18 pm]

BILLING CODE 4810–02–P

DEPARTMENT OF THE TREASURY

31 CFR Part 103

RIN 1506–AA82

Financial Crimes Enforcement Network; Amendment to the Bank Secrecy Act Regulations—Imposition of Special Measure Against VEF Banka

AGENCY: Financial Crimes Enforcement Network (FinCEN), Treasury.

ACTION: Notice of proposed rulemaking.

SUMMARY: FinCEN is issuing this notice of proposed rulemaking to impose a special measure against joint stock company VEF Banka (VEF) as a financial institution of primary money laundering concern, pursuant to the authority contained in 31 U.S.C. 5318A.

DATES: Written comments on the notice of proposed rulemaking must be submitted on or before May 26, 2005.

ADDRESSES: You may submit comments, identified by RIN 1506-AA82, by any of the following methods:

- Federal e-rulemaking portal: *http://www.regulations.gov.* Follow the instructions for submitting comments.
- E-mail: *regcomments@fincen.treas.gov.* Include RIN 1506-AA82 in the subject line of the message.
- Mail: FinCEN, P.O. Box 39, Vienna, VA 22183. Include RIN 1506–AA82 in the body of the text.

Instructions: It is preferable for comments to be submitted by electronic mail because paper mail in the Washington, DC, area may be delayed. Please submit comments by one method only. All submissions received must include the agency name and the Regulatory Information Number (RIN) for this rulemaking. All comments received will be posted without change to *http://www.fincen.gov,* including any personal information provided. Comments may be inspected at FinCEN between 10 a.m. and 4 p.m. in the FinCEN reading room in Washington, DC. Persons wishing to inspect the comments submitted must request an appointment by telephone at (202) 354–6400 (not a toll-free number).

FOR FURTHER INFORMATION CONTACT: Regulatory Policy and Programs Division, FinCEN, (800) 949–2732.

SUPPLEMENTARY INFORMATION:

I. Background

A. Statutory Provisions

On October 26, 2001, the President signed into law the Uniting and Strengthening America by Providing Appropriate Tools Required to Intercept and Obstruct Terrorism Act of 2001 (the USA PATRIOT Act), Public Law 107–56. Title III of the USA PATRIOT Act amends the anti-money laundering provisions of the Bank Secrecy Act (BSA), codified at 12 U.S.C. 1829b, 12 U.S.C. 1951–1959, and 31 U.S.C. 5311–5314, 5316–5332, to promote the prevention, detection, and prosecution of international money laundering and the financing of terrorism. Regulations implementing the BSA appear at 31 CFR Part 103. The authority of the Secretary of the Treasury (''the Secretary'') to administer the BSA and its implementing regulations has been delegated to the Director of FinCEN.[1]

Section 311 of the USA PATRIOT Act (''section 311'') added section 5318A to the BSA, granting the Secretary the authority, upon finding that reasonable grounds exist for concluding that a foreign jurisdiction, institution, class of transactions, or type of account is of

[1] Therefore, references to the authority of the Secretary of the Treasury under section 311 of the USA PATRIOT Act apply equally to the Director of FinCEN.

''primary money laundering concern,'' to require domestic financial institutions and financial agencies to take certain ''special measures'' against the primary money laundering concern. Section 311 identifies factors for the Secretary to consider and federal agencies to consult before the Secretary may conclude that a jurisdiction, institution, class of transactions, or type of account is of primary money laundering concern. The statute also provides similar procedures, including factors and consultation requirements, for selecting the specific special measures to be imposed against the primary money laundering concern.

Taken as a whole, section 311 provides the Secretary with a range of options that can be adapted to target specific money laundering concerns most effectively. These options give the Secretary the authority to bring additional pressure on those jurisdictions and institutions that pose money laundering threats. Through the imposition of various special measures, the Secretary can gain more information about the concerned jurisdictions, institutions, transactions, and accounts; can more effectively monitor the respective jurisdictions, institutions, transactions, and accounts; and/or can protect U.S. financial institutions from involvement with jurisdictions, institutions, transactions, or accounts that pose a money laundering concern.

Before making a finding that reasonable grounds exist for concluding that a foreign financial institution is of primary money laundering concern, the Secretary is required by the Bank Secrecy Act to consult with both the Secretary of State and the Attorney General. The Secretary also is required by section 311 to consider ''such information as the Secretary determines to be relevant, including the following potentially relevant factors:''

- The extent to which such financial institution is used to facilitate or promote money laundering in or through the jurisdiction;
- The extent to which such financial institution is used for legitimate business purposes in the jurisdiction; and
- The extent to which the finding that the institution is of primary money laundering concern is sufficient to ensure, with respect to transactions involving the institution operating in the jurisdiction, that the purposes of the BSA continue to be fulfilled, and to guard against international money laundering and other financial crimes.

If the Secretary determines that a foreign financial institution is of primary money laundering concern, the Secretary must determine the appropriate special measure(s) to address the specific money laundering risks. Section 311 provides a range of special measures that can be imposed individually, jointly, in any combination, and in any sequence.[2] The Secretary's imposition of special measures requires additional consultations to be made and factors to be considered. The statute requires the Secretary to consult with appropriate federal agencies and other interested parties [3] and to consider the following specific factors:

- Whether similar action has been or is being taken by other nations or multilateral groups;
- Whether the imposition of any particular special measure would create a significant competitive disadvantage, including any undue cost or burden associated with compliance, for financial institutions organized or licensed in the United States;
- The extent to which the action or the timing of the action would have a significant adverse systemic impact on the international payment, clearance, and settlement system, or on legitimate business activities involving the particular institution; and
- The effect of the action on United States national security and foreign policy.[4]

B. VEF

In this rulemaking, FinCEN proposes the imposition of the fifth special measure (31 U.S.C. 5318A(b)(5)) against VEF, a commercial bank in Latvia. The fifth special measure prohibits or conditions the opening or maintaining of correspondent or payable-through accounts for the designated institution by U.S. financial institutions. This special measure may be imposed only through the issuance of a regulation.

VEF is headquartered in Riga, the capital of the Republic of Latvia. VEF is one of the smallest of Latvia's 23 banks, reported to have approximately $80 million in assets and 87 employees. It has one subsidiary, Veiksmes līzings, which offers financial leasing and factoring services. In addition to its headquarters in Riga, VEF has one branch in Riga, and one representative office in the Czech Republic. VEF offers corporate and private banking services, issues a variety of credit cards for non-Latvians, and provides currency exchange through Internet banking services, *i.e.* virtual currencies. In addition, according to VEF's financial statements, it maintains 34 correspondent accounts with countries worldwide, including at least one account in the United States.

VEF offers confidential banking services for non-Latvian customers. In fact, VEF's Web site advertises, ''VEF Banka guarantees keeping in secret customer information (information about customer's operations, account balance and other bank operations). It guarantees not revealing this information to third person except the cases, when the customer has agreed that the information can be revealed or when it is demanded by the legislation of the Republic of Latvia.'' Another section of VEF's Web site lists documents (from countries frequently associated with money laundering activities) that are required to open a VEF corporate bank account. According to the bank's financial statements, a large portion of the bank's deposits comes from private companies. Less than 20 percent of these deposits are from individuals or companies located in Latvia. A large number of foreign depositors or a large percentage of assets in foreign funds are both indicators that a bank may be used to launder money. Additionally, approximately 75 percent of the bank's fee income and commissions are generated from payment cards and money transfers, both incoming and outgoing, from correspondent banks.

The bank's dealings with foreign shell companies, provision of confidential banking services, and lack of controls and procedures adequate to the risks involved, make VEF vulnerable to money laundering and other financial

[2] Available special measures include requiring: (1) Recordkeeping and reporting of certain financial transactions; (2) collection of information relating to beneficial ownership; (3) collection of information relating to certain payable-through accounts; (4) collection of information relating to certain correspondent accounts; and (5) prohibition or conditions on the opening or maintaining of correspondent or payable-through accounts. 31 U.S.C. 5318A (b)(1)–(5). For a complete discussion of the range of possible countermeasures, see the notice at 68 fR 18917 (April 17, 2003), which proposed the imposition of special measures against Nauru.

[3] Section 5318A(a)(4)(A) requires the Secretary to consult with the Chairman of the Board of Governors of the Federal Reserve System, any other appropriate Federal banking agency, the Secretary of State, the Securities and Exchange Commission, the Commodity Futures Trading Commission, the National Credit Union Administration, and, in the sole discretion of the Secretary, ''such other agencies and interested parties as the Secretary may find to be appropriate.'' The consultation process must also include the Attorney General if the Secretary is considering prohibiting or imposing conditions on domestic financial institutions maintaining correspondent account relationships with the designated entity.

[4] Classified information used in support of a section 311 finding and measure(s) may be submitted by the Treasury to a reviewing court ex parte and in camera. *See* section 376 of the Intelligence Authorization Act for Fiscal Year 2004, Pub. L. 108–177 (amending 31 U.S.C. 5318A by adding new paragraph (f)).

crimes. As a result of the significant number of credit and debit transactions involving entities that appear to be shell corporations banking at VEF, some U.S. financial institutions have already closed correspondent relationships with VEF.

C. Latvia

Latvia's role as a regional financial center, the number of commercial banks with respect to its size, and those banks' sizeable non-resident deposit base continue to pose significant money laundering risks. Latvian authorities recently have sought tighter legislative controls, regulations, and ''best practices'' designed to fight financial crime. Despite Latvia's recent efforts and amended laws, however, money laundering in Latvia remains a concern. Latvia's geographical position, situated by the Baltic Sea and bordering Russia, Estonia, Belarus, and Lithuania, make it an attractive transit country for both legitimate and illegitimate trade. Sources of laundered money in these countries include counterfeiting, corruption, arms trafficking, contraband smuggling, and other crimes. It is believed that most of Latvia's narcotics trafficking is conducted by organized crime groups that began with cigarette and alcohol smuggling and then progressed to narcotics.

Of particular concern is that many of Latvia's institutions do not appear to serve the Latvian community, but instead serve suspect foreign private shell companies. A common way for criminals to disguise illegal proceeds is to establish shell companies in countries known for lax enforcement of anti-money laundering laws. The criminals use the shell companies to conceal the true ownership of the accounts and assets, which is ideal for the laundering of funds. Similarly, as mentioned above, a disproportionate amount of foreign depositors or assets may indicate that a bank is being used to launder money or evade taxes. Latvia's 23 banks held approximately $5 billion in nonresident deposits at the end of 2004, mainly from Russia and other parts of the former Soviet Union. These deposits accounted for more than half of all the money held in Latvian banks.

Despite growing efforts by the Latvian government for reform, material weaknesses in the implementation and enforcement of its anti-money laundering laws exist. To date there have been no forfeitures of illicit proceeds based on money laundering. In addition, suspicious activity reporting thresholds remain high, at nearly 40,000 LATS (about $80,000 dollars) for most transactions, which fails to capture significant activity below this threshold. Furthermore, since 2004, only two money laundering cases have been tried in Latvian courts, with both cases ending in acquittals.

Latvia has a general reputation for permissive bank secrecy laws and lax enforcement, as evidenced by multiple non-Latvian web sites that offer to establish offshore accounts with Latvian banks in general, and VEF, in particular. The sites claim that Latvian banks offer secure and confidential banking, especially through online banking services. FinCEN also has reason to believe that certain Latvian financial institutions are used by online criminal groups, frequently referred to as ''carding'' groups, to launder the proceeds of their illegal activities. Such groups consist of computer hackers and other criminals that use the Internet as a means of perpetrating credit card fraud, identity theft, and related financial crimes. One of the primary concerns of carding group members is their ability to convert the funds obtained through fraud into cash. Anonymity is another major consideration for online criminals. Reports substantiate that in order to support these two needs, a significant number of carders have turned to Latvian financial institutions for the safe and quasi-anonymous cashing out of their illegal proceeds. FinCEN has additional reason to believe that certain Latvian financial institutions allow non-citizens to open accounts over the Internet, and offer anonymous ATM cards with high or no withdrawal limits.

Latvia has taken steps to address money laundering risks and corruption. In February 2004, a new anti-money laundering law removed some barriers that impeded the prosecution of money laundering. The law expanded the categories of financial institutions covered by reporting requirements to include auditors, lawyers, and high-value dealers, as well as credit institutions. The law also recognizes terrorism as a predicate offense for money laundering.

Recognizing the existence of widespread official corruption, the Latvian government, in January 2002, established the Anti-Corruption Bureau (ACB), an independent agency to combat public corruption by investigating and prosecuting Latvian officials involved in unlawful activities. In 2004, the ACB reviewed over 700 cases of suspected public corruption. Although this initiative is encouraging, FinCEN considers the high levels of corruption in Latvia's government and security forces an impediment both to its international information-sharing efforts and to the fair enforcement of Latvia's anti-money laundering laws.

According to the International Narcotics Strategy Control Report (INSCR) published in March 2005 by the U.S. Department of State, Latvia's banking system is vulnerable to the laundering of narcotics proceeds. The report designates Latvia a jurisdiction of ''primary concern.'' ''Jurisdictions of Primary Concern'' in INSCR are jurisdictions that are identified as ''major money laundering countries,'' that is, countries ''whose financial institutions engage in currency transactions involving significant amounts of proceeds from international narcotics trafficking.''

II. Imposition of Special Measure Against VEF as a Financial Institution of Primary Money Laundering Concern

A. Finding

Based on a review and analysis of relevant information, consultations with relevant federal agencies and departments, and after consideration of the factors enumerated in section 311, the Secretary, through his delegate, the Director of FinCEN, has determined that reasonable grounds exist for concluding that VEF is a financial institution of primary money laundering concern based on a number of factors, including:

1. The Extent to Which VEF Has Been Used To Facilitate or Promote Money Laundering in or Through the Jurisdiction

FinCEN has determined, based upon a variety of sources, that VEF is being used to facilitate or promote money laundering and other financial crimes. Proceeds of illicit activity have been transferred by shell companies with no apparent legitimate business purpose to or through correspondent accounts held by VEF at U.S. financial institutions. As already stated, criminals frequently use shell companies to launder the proceeds of their crimes. A significant number of companies, organized in various countries including the United States, have used accounts at VEF to move millions of U.S. dollars around the world. In a four-month period, VEF initiated or accepted on behalf of a single shell corporation over 300 wire transfers totaling more than $26 million, involving such countries as the United Arab Emirates, Kuwait, Russia, India, and China. In addition, for a two-year period, VEF transferred over $200 million on behalf of two highly suspect corporate accountholders, which is a substantial amount of wire activity for VEF's size.

Many of the private shell companies holding accounts at VEF lack proper documentation of ownership, annual reports, and the reason for the business transactions, while other companies had no listed telephone numbers. Due to concerns about transactions by such companies through accounts at VEF, some U.S. financial institutions have already terminated their correspondent relationships with VEF.

Several accountholders at VEF have repeatedly engaged in a pattern of activity indicative of money laundering. In fact, several VEF accountholders are linked to an international Internet crime organization that has been indicted in federal court for electronic theft of personal identifying information, credit card and debit card fraud, and the production and sale of false identification documents. The defendants and their co-conspirators commonly sent and received payment for illicit merchandise and services via money transfers or digital currency services such as ''E-Gold'' or ''Web Money'' transfers. As discussed below, Web Money purportedly holds an account at VEF.

One reason that Internet financial crime groups are interested in opening accounts at VEF is that the ''Visa Electron'' card associated with a VEF account has no limit on the amount of money that can be withdrawn from an ATM. The ability to make limitless ATM withdrawals is an essential component to the execution of large financial fraud schemes typically associated with carding networks. In addition, the U.S. government has reason to believe that individuals who wish to obtain a Web Money Card will be issued a card linked to a sub-account from Web Money Card's main account at VEF. Criminals who have applied for, obtained, and used Web Money Cards claim that VEF requires a notarized copy of a photo identification document to open an account. The legitimacy of these documents and the notary stamp, however, are reportedly never verified by VEF. Given the level of sophistication of many of these criminals, obtaining high-quality fraudulent identification documents, including a fraudulent notary's stamp, is not a difficult task. Through Web Money's accounts at VEF, these online criminal groups have used VEF to launder their illicit proceeds.

2. The Extent to Which VEF Is Used for Legitimate Business Purposes in the Jurisdiction

It is difficult to determine the extent to which VEF is used for legitimate purposes. As already stated, inordinately high percentages of foreign assets or depositors and the use of a bank by shell companies are both indicators of possible money laundering activities. A significant portion of VEF's business is with shell companies. As already stated, the bank has a reputation for servicing foreign shell companies as evidenced by the many Web sites advertising bank account opening services for such entities. VEF is an important banking resource for such companies who use VEF to access the international financial system to pursue illicit financial activities. FinCEN believes that any legitimate use of VEF is significantly outweighed by its use to promote or facilitate money laundering and other financial crimes. Nevertheless, FinCEN specifically solicits comments on the impact of the proposed special measure upon any legitimate transactions conducted with VEF involving, in particular, U.S. persons or entities, foreign persons, entities, and governments, and multilateral organizations doing legitimate business with persons, entities, or the government of the jurisdiction or operating in the jurisdiction.

3. The Extent to Which Such Action Is Sufficient To Ensure, With Respect to Transactions Involving VEF, That the Purposes of the BSA Continue To Be Fulfilled, and To Guard Against International Money Laundering and Other Financial Crimes

As detailed above, FinCEN has reasonable grounds to conclude that VEF is being used to promote or facilitate international money laundering. Currently, there are no protective measures that specifically target VEF. Thus, finding VEF to be a financial institution of primary money laundering concern and prohibiting the maintenance of correspondent accounts for that institution are necessary steps to prevent suspect accountholders at VEF from accessing the U.S. financial system to facilitate money laundering or to engage in any other criminal purpose. The proposed special measure would not only prohibit U.S. financial institutions from maintaining direct correspondent relationships with VEF, but also would require them to take reasonable steps to prevent indirect use of correspondent services by VEF through intermediary financial institutions. The finding of primary money laundering concern and the imposition of the special measure also will bring criminal conduct occurring at or through VEF to the attention of the international financial community and, it is hoped, further limit the bank's ability to be used for money laundering or for other criminal purposes.

B. Imposition of Special Measure

As a result of the finding that VEF is a financial institution of primary money laundering concern, and based upon the additional consultations and the consideration of relevant factors, the Secretary, through his delegate, the Director of FinCEN, has determined that reasonable grounds exist for the imposition of the special measure authorized by 31 U.S.C. 5318A(b)(5).[5] That special measure authorizes the prohibition of opening or maintaining correspondent accounts[6] by any domestic financial institution or agency for or on behalf of a targeted financial institution. A discussion of the additional section 311 factors relevant to imposing this particular special measure follows.

1. Whether Similar Actions Have Been or Will Be Taken by Other Nations or Multilateral Groups Against VEF

Other countries and multilateral groups have not, as yet, taken action similar to that proposed in this rulemaking to prohibit domestic financial institutions and agencies from opening or maintaining a correspondent account for or on behalf of VEF, and to require those domestic financial institutions and agencies to screen their correspondents for nested correspondent accounts held by VEF. FinCEN encourages other countries to take similar action based on the findings contained in this rulemaking. In the absence of similar action by other countries, it is even more imperative that the fifth special measure be imposed in order to prevent access by VEF to the U.S. financial system.

2. Whether the Imposition of the Fifth Special Measure Would Create a Significant Competitive Disadvantage, Including Any Undue Cost or Burden Associated With Compliance, for Financial Institutions Organized or Licensed in the United States

The fifth special measure sought to be imposed by this rulemaking would prohibit covered financial institutions from opening and maintaining correspondent accounts for, or on behalf of, VEF. As a corollary to this measure,

[5] In connection with this section, FinCEN consulted with staff of the Federal functional regulators, the Department of Justice, and the State Department.

[6] For purposes of the proposed rule, a correspondent account is defined as an account established to receive deposits from, or make payments or other disbursements on behalf of, a foreign bank, or handle other financial transactions related to the foreign bank.

covered financial institutions also would be required to take reasonable steps to apply special due diligence, as set forth below, to all of their correspondent accounts to help ensure that no such account is being used indirectly to provide services to VEF. FinCEN does not expect the burden associated with these requirements to be significant, given its understanding that few U.S. banks currently maintain correspondent accounts for VEF. There is a minimal burden involved in transmitting a one-time notice to all correspondent accountholders concerning the prohibition on indirectly providing services to VEF. In addition, all U.S. financial institutions currently apply some degree of due diligence to the transactions or accounts subject to sanctions administered by the Office of Foreign Assets Control (OFAC) of the Department of the Treasury. As explained in more detail in the section-by-section analysis below, financial institutions should be able to easily adapt their current screening procedures for OFAC sanctions to comply with this special measure. Thus, the special due diligence that would be required by this rulemaking is not expected to impose a significant additional burden upon U.S. financial institutions.

3. The Extent to Which the Proposed Action or Timing of the Action Will Have a Significant Adverse Systemic Impact on the International Payment, Clearance, and Settlement System, or on Legitimate Business Activities of VEF

This proposed rulemaking targets VEF specifically; it does not target a class of financial transactions (such as wire transfers) or a particular jurisdiction. VEF is not a major participant in the international payment system and is not relied upon by the international banking community for clearance or settlement services. Thus, the imposition of the fifth special measure against VEF will not have a significant adverse systemic impact on the international payment, clearance, and settlement system. In light of the reasons for imposing this special measure, FinCEN does not believe that it will impose an undue burden on legitimate business activities, and notes that the presence of approximately 15 larger banks in Latvia will alleviate the burden on legitimate business activities within that jurisdiction.

4. The Effect of the Proposed Action on U.S. National Security and Foreign Policy

The exclusion from the U.S. financial system of banks that serve as conduits for significant money laundering activity and other financial crimes enhances national security by making it more difficult for money launderers and other criminals to access the substantial resources of the U.S. financial system. In addition, the imposition of the fifth special measure against VEF would complement the U.S. Government's overall foreign policy strategy of making entry into the U.S. financial system more difficult for high-risk financial institutions located in jurisdictions that have lax anti-money laundering controls. More generally, the imposition of the fifth special measure would complement diplomatic actions undertaken by both the Latvian and U.S. Governments to expose and disrupt international money laundering and other financial crimes.

Therefore, after conducting the required consultations and weighing the relevant factors, FinCEN has determined that reasonable grounds exist for concluding that VEF is a financial institution of primary money laundering concern and for imposing the special measure authorized by 31 U.S.C. 5318A(b)(5).

III. Section-by-Section Analysis

The proposed rule would prohibit covered financial institutions from establishing, maintaining, administering, or managing in the United States any correspondent account for, or on behalf of, VEF. As a corollary to this prohibition, covered financial institutions would be required to apply special due diligence to their correspondent accounts to guard against their indirect use by VEF. At a minimum, that special due diligence must include two elements. First, a covered financial institution must notify its correspondent accountholders that they may not provide VEF with access to the correspondent account maintained at the covered financial institution. Second, a covered financial institution must take reasonable steps to identify any indirect use of its correspondent accounts by VEF, to the extent that such indirect use can be determined from transactional records maintained by the covered financial institution in the normal course of business. A covered financial institution must take a risk-based approach when deciding what, if any, other due diligence measures it should adopt to guard against the indirect use of its correspondent accounts by VEF, based on risk factors such as the type of services it offers and geographic locations of its correspondents.

A. 103.192(a)—Definitions

1. Correspondent Account

Section 103.192(a)(1) defines the term ''correspondent account'' by reference to the definition contained in 31 CFR 103.175(d)(1)(ii). Section 103.175(d)(1)(ii) defines a correspondent account to mean an account established to receive deposits from, or make payments or other disbursements on behalf of, a foreign bank, or to handle other financial transactions related to the foreign bank.

In the case of a U.S. depository institution, this broad definition would include most types of banking relationships between a U.S. depository institution and a foreign bank, including payable-through accounts.

In the case of securities broker-dealers, futures commission merchants, introducing brokers, and investment companies that are open-end companies (mutual funds), a correspondent account would include any account that permits the foreign bank to engage in (1) trading in securities and commodity futures or options, (2) funds transfers, or (3) other types of financial transactions.

FinCEN is using the same definition for purposes of the proposed rule as that established in the final rule implementing sections 313 and 319(b) of the USA PATRIOT Act,[7] except that the term is being expanded to cover such accounts maintained by mutual funds, futures commission merchants, and introducing brokers.

2. Covered Financial Institution

Section 103.192(a)(2) of the proposed rule defines covered financial institution to mean all of the following: any insured bank (as defined in section 3(h) of the Federal Deposit Insurance Act (12 U.S.C. 1813(h)); a commercial bank or trust company; a private banker; an agency or branch of a foreign bank in the United States; a credit union; a thrift institution; a corporation acting under section 25A of the Federal Reserve Act (12 U.S.C. 611 *et seq.*); a broker or dealer registered or required to register with the SEC under the Securities Exchange Act of 1934 (15 U.S.C. 78a *et seq.*); a futures commission merchant or an introducing broker registered, or required to register, with the CFTC under the Commodity Exchange Act (7 U.S.C. 1 *et seq.*); and an investment company (as defined in section 3 of the Investment Company Act of 1940 (15 U.S.C. 80a–3)) that is an open-end company (as defined in section 5 of the Investment Company

[7] *See* 67 FR 60562 (Sept. 26, 2002), codified at 31 CFR 103.175(d)(1).

Act of 1940 (15 U.S.C. 80a–5)) that is registered, or required to register, with the SEC under Section 8 of the Investment Company Act of 1940 (15 U.S.C. 80a–8).

3. VEF

Section 103.192(a)(3) of the proposed rule defines VEF to include all branches, offices, and subsidiaries of VEF operating in Latvia or in any other jurisdiction. Veiksmes lizings, and any of its branches, is included in the definition. FinCEN will provide information regarding the existence or establishment of any other subsidiaries as it becomes available. Nevertheless, covered financial institutions should take commercially reasonable measures to determine whether a customer is a subsidiary of VEF.

B. 103.192(b)—Requirements for Covered Financial Institutions

For purposes of complying with the proposed rule's prohibition on the opening or maintaining of correspondent accounts for, or on behalf of, VEF, FinCEN expects that a covered financial institution will take such steps that a reasonable and prudent financial institution would take to protect itself from loan fraud or other fraud or loss based on misidentification of a person's status.

1. Prohibition on Direct Use of Correspondent Accounts

Section 103.192(b)(1) of the proposed rule prohibits all covered financial institutions from establishing, maintaining, administering, or managing a correspondent account in the United States for, or on behalf of, VEF. The prohibition would require all covered financial institutions to review their account records to ensure that they maintain no accounts directly for, or on behalf of, VEF.

2. Special Due Diligence of Correspondent Accounts To Prohibit Indirect Use

As a corollary to the prohibition on maintaining correspondent accounts directly for VEF, section 103.192(b)(2) requires a covered financial institution to apply special due diligence to its correspondent accounts that is reasonably designed to guard against their indirect use by VEF. At a minimum, that special due diligence must include notifying correspondent accountholders that they may not provide VEF with access to the correspondent account maintained at the covered financial institution. For example, a covered financial institution may satisfy this requirement by transmitting the following notice to all of its correspondent accountholders:

Notice: Pursuant to U.S. regulations issued under section 311 of the USA PATRIOT Act, 31 CFR 103.192, we are prohibited from establishing, maintaining, administering or managing a correspondent account for, or on behalf of, joint stock company VEF Banka (VEF) or any of its subsidiaries, including Veiksmes līzings. The regulations also require us to notify you that you may not provide VEF or any of its subsidiaries with access to the correspondent account you hold at our financial institution. If we become aware that VEF or any of its subsidiaries is indirectly using the correspondent account you hold at our financial institution, we will be required to take appropriate steps to block such access, including terminating your account.

The purpose of the notice requirement is to help ensure cooperation from correspondent accountholders in denying VEF access to the U.S. financial system, as well as to increase awareness within the international financial community of the risks and deficiencies of VEF. However, FinCEN does not require or expect a covered financial institution to obtain a certification from its correspondent accountholders that indirect access will not be provided in order to comply with this notice requirement. Instead, methods of compliance with the notice requirement could include, for example, transmitting a one-time notice by mail, fax, or e-mail to a covered financial institution's correspondent account customers informing them that they may not provide VEF with access to the covered financial institution's correspondent account, or including such information in the next regularly occurring transmittal from the covered financial institution to its correspondent accountholders. FinCEN specifically solicits comments on the appropriate form, scope, and timing of the notice that would be required under the rule.

A covered financial institution also would be required under this rulemaking to take reasonable steps to identify any indirect use of its correspondent accounts by VEF, to the extent that such indirect use can be determined from transactional records maintained by the covered financial institution in the normal course of business. For example, a covered financial institution would be expected to apply an appropriate screening mechanism to be able to identify a funds transfer order that on its face listed VEF as the originator's or beneficiary's financial institution, or otherwise referenced VEF. An appropriate screening mechanism could be the mechanism used by a covered financial institution to comply with sanctions programs administered by OFAC. FinCEN specifically solicits comments on the requirement under the proposed rule that a covered financial institution take reasonable steps to screen its correspondent accounts in order to identify any indirect use of such accounts by VEF.

Notifying its correspondent accountholders and taking reasonable steps to identify any indirect use of its correspondent accounts by VEF in the manner discussed above are the minimum due diligence requirements under the proposed rule. Beyond these minimum steps, a covered financial institution should adopt a risk-based approach for determining what, if any, other due diligence measures it should implement to guard against the indirect use of its correspondents accounts by VEF, based on risk factors such as the type of services it offers and the geographic locations of its correspondent accountholders.

A covered financial institution that obtains knowledge that a correspondent account is being used by a foreign bank to provide indirect access to VEF must take all appropriate steps to block such indirect access, including, where necessary, terminating the correspondent account. A covered financial institution may afford the foreign bank a reasonable opportunity to take corrective action prior to terminating the correspondent account. Should the foreign bank refuse to comply, or if the covered financial institution cannot obtain adequate assurances that the account will not be available to VEF, the covered financial institution must terminate the account within a commercially reasonable time. This means that the covered financial institution should not permit the foreign bank to establish any new positions or execute any transactions through the account, other than those necessary to close the account. A covered financial institution may reestablish an account closed under the proposed rule if it determines that the account will not be used to provide banking services indirectly to VEF. FinCEN specifically solicits comment on the requirement under the proposed rule that a covered financial institution block indirect access to VEF once such indirect access is identified.

3. Reporting Not Required

Section 103.192(b)(3) of the proposed rule clarifies that the rule does not impose any reporting requirement upon any covered financial institution that is not otherwise required by applicable law or regulation. A covered financial institution must, however, document its

compliance with the requirement that it notify its correspondent accountholders that they may not provide VEF with access to the correspondent account maintained at the covered financial institution.

IV. Request for Comments

FinCEN invites comments on all aspects of the proposal to prohibit the opening or maintaining of correspondent accounts for or on behalf of VEF, and specifically invites comments on the following matters:

1. The appropriate form, scope, and timing of the notice to correspondent accountholders that would be required under the rule;
2. The appropriate scope of the proposed requirement for a covered financial institution to take reasonable steps to identify any indirect use of its correspondent accounts by VEF;
3. The appropriate steps a covered financial institution should take once it identifies an indirect use of one of its correspondent accounts by VEF; and
4. The impact of the proposed special measure upon any legitimate transactions conducted with VEF by U.S. persons and entities, foreign persons, entities, and governments, and multilateral organizations doing legitimate business with persons, entities, or Latvia, or operating a legitimate business in Latvia.

V. Regulatory Flexibility Act

It is hereby certified that this proposed rule will not have a significant economic impact on a substantial number of small entities. FinCEN understands that VEF maintains a correspondent account at one large bank in the United States. Thus, the prohibition on maintaining such accounts will not have a significant impact on a substantial number of small entities. In addition, all U.S. persons, including U.S. financial institutions, should currently exercise some degree of due diligence in order to comply with U.S. sanctions programs administered by OFAC, which can easily be modified to monitor for the direct and indirect use of correspondent accounts by VEF. Thus, the special due diligence that would be required by this rulemaking—*i.e.*, the one-time transmittal of notice to correspondent accountholders, and the screening of transactions to identify any indirect use of correspondent accounts—is not expected to impose a significant additional economic burden upon small U.S. financial institutions. FinCEN invites comments from members of the public who believe there will be a significant economic impact on small entities.

VI. Paperwork Reduction Act

The collection of information contained in this proposed rule is being submitted to the Office of Management and Budget for review in accordance with the Paperwork Reduction Act of 1995 (44 U.S.C. 3507(d)). Comments on the collection of information should be sent (preferably by fax (202–395–6974)) to Desk Officer for the Department of the Treasury, Office of Information and Regulatory Affairs, Office of Management and Budget, Paperwork Reduction Project (1506), Washington, DC 20503 (or by e-mail to *Alexander_T._Hunt@omb.eop.gov*), with a copy to FinCEN by mail or e-mail at the addresses previously specified. Comments on the collection of information should be received by May 26, 2005. In accordance with the requirements of the Paperwork Reduction Act of 1995, 44 U.S.C. 3506(c)(2)(A), and its implementing regulations, 5 CFR 1320, the following information concerning the collection of information as required by 31 CFR 103.192 is presented to assist those persons wishing to comment on the information collection.

The collection of information in this proposed rule is in 31 CFR 103.192(b)(2)(i) and 31 CFR 103.192(b)(3)(i). The disclosure requirement in 31 CFR 103.192(b)(2)(i) is intended to ensure cooperation from correspondent accountholders in denying VEF access to the U.S. financial system, as well as to increase awareness within the international financial community of the risks and deficiencies of VEF. The information required to be maintained by 31 CFR 103.192(b)(3)(i) will be used by federal agencies and certain self-regulatory organizations to verify compliance by covered financial institutions with the provisions of 31 CFR 103.192. The class of financial institutions affected by the disclosure requirement is identical to the class of financial institutions affected by the recordkeeping requirement. The collection of information is mandatory.

Description of Affected Financial Institutions: Banks, broker-dealers in securities, futures commission merchants and introducing brokers, and mutual funds maintaining correspondent accounts.

Estimate Number of Affected Financial Institutions: 5,000.

Estimated Average Annual Burden Hours Per Affected Financial Institution: The estimated average burden associated with the collection of information in this proposed rule is one hour per affected financial institution.

Estimated Total Annual Burden: 5,000 hours.

FinCEN specifically invites comments on: (a) Whether the proposed collection of information is necessary for the proper performance of the mission of FinCEN, including whether the information shall have practical utility; (b) the accuracy of FinCEN's estimate of the burden of the proposed collection of information; (c) ways to enhance the quality, utility, and clarity of the information required to be maintained; (d) ways to minimize the burden of the required collection of information, including through the use of automated collection techniques or other forms of information technology; and (e) estimates of capital or start-up costs and costs of operation, maintenance, and purchase of services to maintain the information.

VII. Executive Order 12866

This proposed rule is not a significant regulatory action for purposes of Executive Order 12866, ''Regulatory Planning and Review.''

List of Subjects in 31 CFR Part 103

Administrative practice and procedure, Banks and banking, Brokers, Counter-money laundering, Counter-terrorism, and Foreign banking.

Authority and Issuance

For the reasons set forth in the preamble, part 103 of title 31 of the Code of Federal Regulations is proposed to be amended as follows:

PART 103—FINANCIAL RECORDKEEPING AND REPORTING OF CURRENCY AND FINANCIAL TRANSACTIONS

1. The authority citation for part 103 is revised to read as follows:

Authority: 12 U.S.C. 1829b and 1951–1959; 31 U.S.C. 5311–5314, 5316–5332; title III, secs. 311, 312, 313, 314, 319, 326, 352, Pub. L. 107–56, 115 Stat. 307.

2. Subpart I of part 103 is proposed to be amended by adding new § 103.192, as follows:

§ 103.192 Special measures against VEF.

(a) *Definitions.* For purposes of this section:

(1) *Correspondent account* has the same meaning as provided in § 103.175(d)(1)(ii).

(2) *Covered financial institution* has the same meaning as provided in § 103.175(f)(2) and also includes:

(i) A futures commission merchant or an introducing broker registered, or required to register, with the Commodity Futures Trading

Commission under the Commodity Exchange Act (7 U.S.C. 1 *et seq.*); and

(ii) An investment company (as defined in section 3 of the Investment Company Act of 1940 (15 U.S.C. 80a–3)) that is an open-end company (as defined in section 5 of the Investment Company Act (15 U.S.C. 80a–5)) and that is registered, or required to register, with the Securities and Exchange Commission under section 8 of the Investment Company Act (15 U.S.C. 80a–8).

(3) *Subsidiary* means a company of which more than 50 percent of the voting stock or analogous equity interest is owned by another company.

(4) *VEF* means any branch, office, or subsidiary of joint stock company VEF Banka operating in Latvia or any other jurisdiction.

(b) *Requirements for covered financial institutions*—(1) *Prohibition on direct use of correspondent accounts.* A covered financial institution shall terminate any correspondent account that is established, maintained, administered, or managed in the United States for, or on behalf of, VEF.

(2) *Special due diligence of correspondent accounts to prohibit indirect use.* (i) A covered financial institution shall apply special due diligence to its correspondent accounts that is reasonably designed to guard against their indirect use by VEF. At a minimum, that special due diligence must include:

(A) Notifying correspondent accountholders that they may not provide VEF with access to the correspondent account maintained at the covered financial institution; and

(B) Taking reasonable steps to identify any indirect use of its correspondent accounts by VEF to the extent that such indirect use can be determined from transactional records maintained in the covered financial institution's normal course of business.

(ii) A covered financial institution shall take a risk-based approach when deciding what, if any, other due diligence measures it should adopt to guard against the indirect use of its correspondent accounts by VEF.

(iii) A covered financial institution that obtains knowledge that a correspondent account is being used by the foreign bank to provide indirect access to VEF, shall take all appropriate steps to block such indirect access, including, where necessary, terminating the correspondent account.

(3) *Recordkeeping and reporting.* (i) A covered financial institution is required to document its compliance with the notice requirement set forth in paragraph (b)(2)(i)(A) of this section.

(ii) Nothing in this section shall require a covered financial institution to report any information not otherwise required to be reported by law or regulation.

Dated: April 21, 2005.

William J. Fox,

Director, Financial Crimes Enforcement Network.

[FR Doc. 05–8280 Filed 4–21–05; 1:18 pm]

BILLING CODE 4810–02–P

DEPARTMENT OF HOMELAND SECURITY

Coast Guard

33 CFR Part 100

[CGD 07–05–019]

RIN 1625–AA08

Special Local Regulations: Annual Offshore Super Series Boat Race, Fort Myers Beach, FL

AGENCY: Coast Guard, DHS.

ACTION: Notice of proposed rulemaking.

SUMMARY: The Coast Guard proposes to establish permanent special local regulations for the Offshore Super Series Boat Race in Fort Myers Beach, Florida. This event will be held annually during the second consecutive Saturday and Sunday of June between 10 a.m. and 5 p.m. EDT (Eastern Daylight Time). Historically, there have been approximately 350 participant and spectator craft. The resulting congestion of navigable channels creates an extra or unusual hazard in the navigable waters of the United States. This proposed rule is necessary to ensure the safety of life for the participating vessels, spectators, and mariners in the area on the navigable waters of the United States.

DATES: Comments and related material must reach the Coast Guard on or before May 26, 2005.

ADDRESSES: You may mail comments and related material to Coast Guard Marine Safety Office Tampa, 155 Columbia Drive, Tampa, Florida 33606–3598. The Waterways Management Division maintains the public docket for this rulemaking. Comments and material received from the public, as well as documents indicated in this preamble as being available in the docket, will become part of this docket and will be available for inspection or copying at Coast Guard Marine Safety Office Tampa between 7:30 a.m. and 4 p.m., Monday through Friday, except Federal holidays.

FOR FURTHER INFORMATION CONTACT: Lieutenant Junior Grade Jennifer Andrew at Coast Guard Marine Safety Office Tampa (813) 228–2191 Ext 8203.

SUPPLEMENTARY INFORMATION:

Request for Comments

We encourage you to participate in this rulemaking by submitting comments and related material. If you do so, please include your name and address, identify the docket number for this rulemaking (CGD 07–05–019), indicate the specific section of this document to which each comment applies, and give the reason for each comment. Please submit all comments and related material in an unbound format, no larger than 8 by 11 inches, suitable for copying. If you would like to know they reached us, please enclose a stamped, self-addressed postcard or envelope. We will consider all comments and material received during the comment period. We may change this proposed rule in view of them.

Public Meeting

We do not now plan to hold a public meeting. But you may submit a request for a meeting by writing to Coast Guard Marine Safety Office Tampa at the address under **ADDRESSES** explaining why one would be beneficial. If we determine that one would aid this rulemaking, we will hold one at a time and place announced by a later notice in the **Federal Register**.

Background and Purpose

The Offshore Super Series will sponsor an offshore powerboat race on the near-shore waters of Fort Myers Beach, Florida. The annual event is proposed for the second consecutive Saturday and Sunday in June from 10 a.m. to 5 p.m. The event will host approximately 50 participant vessels that travel up to speeds of 130 mph, and approximately 300 spectator craft. The proposed regulation is needed to provide for the safety of life on the Navigable waters of the United States during the Annual Offshore Super Series Boat Race in the vicinity of the near-shore waters off Fort Myers Beach, Florida. The anticipated concentration of spectator and participant vessels associated with the event poses a safety concern, which is addressed in this proposed special local regulation.

Discussion of Proposed Rule

The proposed regulation would include a regulated area around the racecourse that would prohibit all non-participant vessels and persons from entering the proposed regulated area annually from 10 a.m. to 5 p.m. on the

second consecutive Saturday and Sunday of June. The proposed regulation would only permit anchoring of spectator vessels seaward of a designated spectator line. All spectator craft would be required to remain seaward of a designated spectator line. Although the proposed regulation allows continuous entry and exit to Matanzas Pass Channel for the duration of the event, the northern portion of the regulated area is in very close proximity to the channel entrance. In order to avoid incursions into the northern portion of the regulated area by vessels avoiding collision due to traffic congestion in the channel, the proposed rule would require vessels entering and exiting Matanzas Pass to proceed cautiously and take early action to avoid close-quarters situations until finally past and clear of the regulated area. This proposed regulation is intended to provide for the safety of life on the navigable waters of the United States for event participants and for mariners traveling in the vicinity of the near-shore waters of Fort Myers Beach, Florida.

Regulatory Evaluation

This proposed rule is not a ''significant regulatory action'' under section 3(f) of Executive Order 12866, Regulatory Planning and Review, and does not require an assessment of potential costs and benefits under section 6(a)(3) of that Order. The Office of Management and Budget has not reviewed it under that Order. It is not ''significant'' under the regulatory policies and procedures of the Department of Homeland Security (DHS).

We expect the economic impact of this proposed rule to be so minimal that a full Regulatory Evaluation under the regulatory policies and procedures of DHS is unnecessary. The proposed regulation would be in effect for only a limited time in an area where vessel traffic is limited and vessels will still be allowed to entry and exit Matanzas Pass Channel.

Small Entities

Under the Regulatory Flexibility Act (5 U.S.C. 601–612), we have considered whether this proposed rule would have a significant economic impact on a substantial number of small entities. The term ''small entities'' comprises small businesses, not-for-profit organizations that are independently owned and operated and are not dominant in their fields, and governmental jurisdictions with populations of less than 50,000.

The Coast Guard certifies under 5 U.S.C. 605(b) that this proposed rule would not have a significant economic impact on a substantial number of small entities. This proposed rule may affect the following entities, some of which may be small entities: the owners and operators of vessels intending to transit near to shore at Fort Myers Beach, FL in the vicinity of Matanzas Pass annually from 10 a.m. to 5 p.m. on the second consecutive Saturday and Sunday in June. This proposed rule would not have a significant economic impact on a substantial number of small entities since it would only be in effect for a limited time in an area where vessel traffic is limited and vessels will still be allowed to enter and exit Matanzas Pass Channel.

If you think that your business, organization, or governmental jurisdiction qualifies as a small entity and that this rule would have a significant economic impact on it, please submit a comment (see **ADDRESSES**) explaining why you think it qualifies and how and to what degree this rule would economically affect it.

Assistance for Small Entities

Under section 213(a) of the Small Business Regulatory Enforcement Fairness Act of 1996 (Pub. L. 104–121), we want to assist small entities in understanding this proposed rule so that they can better evaluate its effects on them and participate in the rulemaking. If the rule would affect your small business, organization, or governmental jurisdiction and you have questions concerning its provisions or options for compliance, please contact the person identified in the **FOR FURTHER INFORMATION CONTACT**. The Coast Guard will not retaliate against small entities that question or complain about this rule or any policy or action of the Coast Guard.

Collection of Information

This proposed rule would call for no new collection of information under the Paperwork Reduction Act of 1995 (44 U.S.C. 3501–3520).

Federalism

A rule has implications for federalism under Executive Order 13132, Federalism, if it has a substantial direct effect on State or local governments and would either preempt State law or impose a substantial direct cost of compliance on them. We have analyzed this proposed rule under that Order and have determined that it does not have implications for federalism.

Unfunded Mandates Reform Act

The Unfunded Mandates Reform Act of 1995 (2 U.S.C. 1531–1538) requires Federal agencies to assess the effects of their discretionary regulatory actions. In particular, the Act addresses actions that may result in the expenditure by a State, local, or tribal government, in the aggregate, or by the private sector of $100,000,000 or more in any one year. Though this proposed rule would not result in such an expenditure, we do discuss the effects of this rule elsewhere in this preamble.

Taking of Private Property

This proposed rule would not effect a taking of private property or otherwise have taking implications under Executive Order 12630, Governmental Actions and Interference with Constitutionally Protected Property Rights.

Civil Justice Reform

This proposed rule meets applicable standards in sections 3(a) and 3(b)(2) of Executive Order 12988, Civil Justice Reform, to minimize litigation, eliminate ambiguity, and reduce burden.

Protection of Children

We have analyzed this proposed rule under Executive Order 13045, Protection of Children from Environmental Health Risks and Safety Risks. This rule is not an economically significant rule and would not create an environmental risk to health or risk to safety that might disproportionately affect children.

Indian Tribal Governments

This proposed rule does not have tribal implications under Executive Order 13175, Consultation and Coordination with Indian Tribal Governments, because it would not have a substantial direct effect on one or more Indian tribes, on the relationship between the Federal Government and Indian tribes, or on the distribution of power and responsibilities between the Federal Government and Indian tribes.

Energy Effects

We have analyzed this proposed rule under Executive Order 13211, Actions Concerning Regulations That Significantly Affect Energy Supply, Distribution, or Use. We have determined that it is not a ''significant energy action'' under that order because it is not a ''significant regulatory action'' under Executive Order 12866 and is not likely to have a significant adverse effect on the supply, distribution, or use of energy. The Administrator of the Office

of Information and Regulatory Affairs has not designated it as a significant energy action. Therefore, it does not require a Statement of Energy Effects under Executive Order 13211.

Technical Standards

The National Technology Transfer and Advancement Act (NTTAA) (15 U.S.C. 272 note) directs agencies to use voluntary consensus standards in their regulatory activities unless the agency provides Congress, through the Office of Management and Budget, with an explanation of why using these standards would be inconsistent with applicable law or otherwise impractical. Voluntary consensus standards are technical standards (*e.g.*, specifications of materials, performance, design, or operation; test methods; sampling procedures; and related management systems practices) that are developed or adopted by voluntary consensus standards bodies.

This proposed rule does not use technical standards. Therefore, we did not consider the use of voluntary consensus standards.

Environment

We have analyzed this proposed rule under Commandant Instruction M16475.lD, which guides the Coast Guard in complying with the National Environmental Policy Act of 1969 (NEPA) (42 U.S.C. 4321–4370f), and have concluded that there are no factors in this case that would limit the use of a categorical exclusion under section 2.B.2 of the Instruction. Therefore, this rule is categorically excluded, under figure 2–1, paragraph (34)(h), of the Instruction, from further environmental documentation. As a special local regulation issued in conjunction with a boat race, this proposed rule satisfies the requirements of paragraph (34)(h). Under figure 2–1, paragraph (34)(h), of the Instruction, an ''Environmental Analysis Check List'' and a ''Categorical Exclusion Determination'' are not required for this rule. Comments on this section will be considered before we make the final decision on whether to categorically exclude this rule from further environmental review.

List of Subjects in 33 CFR Part 100

Marine safety, Navigation (water), Reporting and recordkeeping requirements, Waterways.

For the reasons discussed in the preamble, the Coast Guard proposes to amend 33 CFR part 100 as follows:

PART 100—SAFETY OF LIFE ON NAVIGABLE WATERS

1. The authority citation for part 100 continues to read as follows:

Authority: 33 U.S.C. 1233; Department of Homeland Security Delegation No. 0170.

2. Add § 100.736 to read as follows

§ 100.736 Annual Offshore Super Series Boat Race; Fort Myers Beach, FL.

(a) *Regulated areas.* (1) The regulated area is formed within the following coordinates; point 1: 26°27′43″ N, 81°58′22″ W south to point 2: 26°27′05″ N, 81°58′37″ W east to point 3: 26°25′39″ N, 81°55′46″ W north to point 4: 26°26′14″ N, 81°55′22″ W and west to original point 1: 26°27′43″ N, 81°58′22″ W. All coordinates referenced use datum: NAD 1983.

(2) The *spectator line* is formed by the following coordinates; point 1: 26°26′53″ N, 81°58′27″ W east to point 2: 26°25′32″ N, 81°53′57″ W. All coordinates referenced use datum: NAD 1983.

(b) *Special local regulations.* (1) Non-participant vessels and persons are prohibited from entering the regulated area as defined in paragraph (a)(1).

(2) All vessels entering and exiting Matanzas Pass Channel shall proceed cautiously and take early action to avoid close-quarters situations until finally past and clear of the regulated area.

(3) Anchoring is only permitted seaward of the spectator line as defined in paragraph (a)(2).

(4) Spectator vessels must remain seaward of the spectator line as defined in paragraph (a)(2).

(c) *Enforcement dates.* This section will be enforced annually from 10 a.m. to 5 p.m. EDT on the second consecutive Saturday and Sunday of June.

Dated: April 14, 2005.

D.B. Peterman,

RADM, U.S. Coast Guard, Commander, Seventh Coast Guard District.

[FR Doc. 05–8263 Filed 4–25–05; 8:45 am]

BILLING CODE 4910–15–P

DEPARTMENT OF HOMELAND SECURITY

Coast Guard

33 CFR Part 147

[CGD08–05–019]

RIN 1625–AA00

Safety Zone; Outer Continental Shelf Facility in the Gulf of Mexico for Mississippi Canyon 778

AGENCY: Coast Guard, DHS.

ACTION: Notice of proposed rulemaking.

SUMMARY: The Coast Guard proposes the establishment of a safety zone around a petroleum and gas production facility in Mississippi Canyon 778 of the Outer Continental Shelf in the Gulf of Mexico. The facility needs to be protected from vessels operating outside the normal shipping channels and fairways, and placing a safety zone around this area would significantly reduce the threat of allisions, oil spills and releases of natural gas. This proposed rule prohibits all vessels from entering or remaining in the specified area around the facility's location except for an attending vessel, a vessel under 100 feet in length overall not engaged in towing, or a vessel authorized by the Eighth Coast Guard District Commander.

DATES: Comments and related material must reach the Coast Guard on or before June 27, 2005.

ADDRESSES: You may mail comments and related material to Commander, Eighth Coast Guard District (m), Hale Boggs Federal Bldg., 500 Poydras Street, New Orleans, LA 70130, or comments and related material may be delivered to Room 1341 at the same address between 8 a.m. and 4 p.m., Monday through Friday, except Federal holidays. The telephone number is (504) 589–6271. Commander, Eighth Coast Guard District (m) maintains the public docket for this rulemaking. Comments and material received from the public, as well as documents indicated in this preamble as being available in the docket, will become part of this docket and will be available for inspection or copying at the location listed above during the noted time periods.

FOR FURTHER INFORMATION CONTACT: Lieutenant (LT) Kevin Lynn, Project Manager for Eighth Coast Guard District Commander, Hale Boggs Federal Bldg., 500 Poydras Street, New Orleans, LA 70130, telephone (504) 589–6271.

SUPPLEMENTARY INFORMATION:

Requests for Comments

We encourage you to participate in this rulemaking by submitting comments and related material. If you do so, please include your name and address, identify the docket number for this rulemaking [CGD08–05–019], indicate the specific section of this document to which each comment applies, and give the reason for each comment. Please submit all comments and related material in an unbound format, no larger than 8½ by 11 inches, suitable for copying. If you would like to know they reached us, please enclose a stamped, self-addressed postcard or

envelope. We will consider all comments and material received during the comment period. We may change this proposed rule in view of them.

Public Meeting

We do not plan to hold a public meeting. However, you may submit a request for a meeting by writing to Commander, Eighth Coast Guard District (m) at the address under **ADDRESSES** explaining why one would be beneficial. If we determine that a public meeting would aid this rulemaking, we will hold one at a time and place announced by a later notice in the **Federal Register**.

Background and Purpose

The Coast Guard proposes the establishment of a safety zone around the Thunder Horse Semi-Submersible facility, a petroleum and gas production facility in the Gulf of Mexico in Mississippi Canyon 778 (MC 778), located at position 28°11′26″ N, 88°29′44″ W.

This proposed safety zone is in the deepwater area of the Gulf of Mexico. For the purposes of this regulation it is considered to be in waters of 304.8 meters (1,000 feet) or greater depth extending to the limits of the Exclusive Economic Zone (EEZ) contiguous to the territorial sea of the United States and extending to a distance up to 200 nautical miles from the baseline from which the breadth of the sea is measured. Navigation in the area of the proposed safety zone consists of large commercial shipping vessels, fishing vessels, cruise ships, tugs with tows and the occasional recreational vessel. The deepwater area of the Gulf of Mexico also includes an extensive system of fairways. The fairway nearest the proposed safety zone is the South Pass (Mississippi River) Safety Fairway—South Pass to Sea Safety Fairway. Significant amounts of vessel traffic occur in or near the various fairways in the deepwater area.

British Petroleum America Inc., hereafter referred to as BP, has requested that the Coast Guard establish a safety zone in the Gulf of Mexico around the Thunder Horse Semi-Submersible facility.

The request for the safety zone was made due to the high level of shipping activity around the facility and the associated safety concerns for both the onboard personnel and the environment. Information provided by BP to the Coast Guard indicates that the location, production levels, and personnel levels on board the facility make it highly likely that any allision with the facility or its mooring system would result in a catastrophic event.

The Coast Guard has evaluated BP's information and concerns against Eighth Coast Guard District criteria developed to determine if an Outer Continental Shelf facility qualifies for a safety zone. Several factors were considered to determine the necessity of a safety zone for the Thunder Horse Semi-Submersible facility: (1) The facility is located approximately 50 nautical miles south of the ''South Pass (Mississippi River) Safety Fairway—South Pass to Sea Safety Fairway''; (2) the facility will have a high daily production capacity of petroleum oil and gas per day; (3) the facility will be manned; and (4) the facility will be of the semi-submersible type.

We conclude that the risk of allision to the facility and the potential for loss of life and damage to the environment resulting from such an accident warrants the establishment of this proposed safety zone. The proposed rule would significantly reduce the threat of allisions, oil spills and natural gas releases and increase the safety of life, property, and the environment in the Gulf of Mexico. This proposed regulation is issued pursuant to 14 U.S.C. 85 and 43 U.S.C. 1333 as set out in the authority citation for 33 CFR part 147.

Discussion of Proposed Rule

The proposed safety zone would encompass the area within 500 meters (1640.4 feet) from each point on the Thunder Horse's structure outer edge. No vessel would be allowed to enter or remain in this proposed safety zone except the following: An attending vessel; a vessel under 100 feet in length overall not engaged in towing; or a vessel authorized by the Eighth Coast Guard District Commander.

Regulatory Evaluation

This proposed rule is not a ''significant regulatory action'' under section 3(f) of Executive Order 12866 and does not require an assessment of potential costs and benefits under section 6(a)(3) of that Order. The Office of Management and Budget has not reviewed it under that Order. It is not significant under the regulatory policies and procedures of the Department of Homeland Security (DHS).

We expect the economic impact of this proposed rule to be so minimal that a full regulatory evaluation under the regulatory policies and procedures of DHS is unnecessary. The impacts on routine navigation are expected to be minimal because the proposed safety zone will not overlap any of the safety fairways within the Gulf of Mexico.

Small Entities

Under the Regulatory Flexibility Act (5 U.S.C. 601–612), we have considered whether this proposed rule would have a significant economic impact on a substantial number of small entities. The term ''small entities'' comprises small businesses, not-for-profit organizations that are independently owned and operated and are not dominant in their fields, and governmental jurisdictions with populations of less than 50,000.

The Coast Guard certifies under 5 U.S.C. 605(b) that this proposed rule would not have a significant economic impact on a substantial number of small entities. Since the Thunder Horse Semi-Submersible will be located far offshore, few privately owned fishing vessels and recreational boats/yachts operate in the area and alternate routes are available for those vessels. Use of an alternate route may cause a vessel to incur a delay of 4 to 10 minutes in arriving at their destinations depending on how fast the vessel is traveling. Therefore, the Coast Guard expects the impact of this proposed rule on small entities to be minimal.

If you think that your business, organization, or governmental jurisdiction qualifies as a small entity and that this proposed rule would have a significant economic impact on it, please submit a comment (see **ADDRESSES**) explaining why you think it qualifies and to what degree this rule would economically affect it.

Assistance for Small Entities

Under section 213(a) of the Small Business Regulatory Enforcement Fairness Act of 1996 (Pub. L. 104–121), we want to assist small entities in understanding this proposed rule so that they can better evaluate its effects on them and participate in the rulemaking. If the rule would affect your small business, organization, or governmental jurisdiction and you have questions concerning its provisions or options for compliance, please contact LT Kevin Lynn, Project Manager for Eighth Coast Guard District Commander, Hale Boggs Federal Bldg., 500 Poydras Street, New Orleans, LA 70130, telephone (504) 589–6271.

Collection of Information

This proposed rule would call for no new collection of information under the Paperwork Reduction Act of 1995 (44 U.S.C. 3501–3520).

Federalism

A rule has implications for federalism under Executive Order 13132, Federalism, if it has a substantial direct effect on State or local governments and would either preempt State law or impose a substantial direct cost of compliance on them. We have analyzed this proposed rule under that Order and have determined that it does not have implications for federalism.

Unfunded Mandates Reform Act

The Unfunded Mandates Reform Act of 1995 (2 U.S.C. 1531–1538) requires Federal agencies to assess the effects of their discretionary regulatory actions. In particular, the Act addresses actions that may result in the expenditure by a State, local, or tribal government, in the aggregate, or by the private sector of $100,000,000 or more in any one year. Though this proposed rule will not result in such expenditure, we discuss the effects of this rule elsewhere in this preamble.

Taking of Private Property

This proposed rule will not effect a taking of private property or otherwise have taking implications under Executive Order 12630, Governmental Actions and Interference with Constitutionally Protected Property Rights.

Civil Justice Reform

This proposed rule meets applicable standards in sections 3(a) and 3(b)(2) of Executive Order 12988, Civil Justice Reform, to minimize litigation, eliminate ambiguity, and reduce burden.

Protection of Children

We have analyzed this proposed rule under Executive Order 13045, Protection of Children from Environmental Health Risks and Safety Risks. This rule is not an economically significant rule and does not create an environmental risk to health or risk to safety that may disproportionately affect children.

Indian Tribal Governments

This proposed rule does not have tribal implications under Executive Order 13175, Consultation and Coordination with Indian Tribal Governments, because it would not have a substantial direct effect on one or more Indian tribes, on the relationship between the Federal Government and Indian tribes, or on the distribution of power and responsibilities between the Federal Government and Indian tribes.

Energy Effects

We have analyzed this proposed rule under Executive Order 13211, Actions Concerning Regulations That Significantly Affect Energy Supply, Distribution, or Use. We have determined that it is not a ''significant energy action'' under that Order because it is not a ''significant regulatory action'' under Executive Order 12866 and is not likely to have a significant adverse effect on the supply, distribution, or use of energy. The Administrator of the Office of Information and Regulatory Affairs has not designated it as a significant energy action. Therefore, it does not require a Statement of Energy Effects under Executive Order 13211.

Technical Standards

The National Technology Transfer and Advancement Act (NTTAA) (15 U.S.C. 272 note) directs agencies to use voluntary consensus standards in their regulatory activities unless the agency provides Congress, through the Office of Management and Budget, with an explanation of why using these standards would be inconsistent with applicable law or otherwise impractical. Voluntary consensus standards are technical standards (e.g., specifications of materials, performance, design, or operation; test methods; sampling procedures; and related management systems practices) that are developed or adopted by voluntary consensus standards bodies.

This proposed rule does not use technical standards. Therefore, we did not consider the use of voluntary consensus standards.

Environment

We have analyzed this proposed rule under Commandant Instruction M16475.1D, which guides the Coast Guard in complying with the National Environmental Policy Act of 1969 (NEPA) (42 U.S.C. 4321–4370f), and have concluded that there are no factors in this case that would limit the use of categorical exclusion under section 2.B.2 of the Instruction. Therefore, this rule is categorically excluded, under figure 2–1 paragraph (34)(g), of the instruction, from further environmental documentation because this rule is not expected to result in any significant environmental impact as described in NEPA.

A draft ''Environmental Analysis Check List'' and a draft ''Categorical Exclusion Determination'' are available in the docket where indicated under **ADDRESSES.** Comments on this section will be considered before we make the final decision on whether the rule should be categorically excluded from further environmental review.

List of Subjects in 33 CFR Part 147

Continental shelf, Marine safety, Navigation (water).

For the reasons discussed in the preamble, the Coast Guard proposes to amend 33 CFR part 147 as follows:

PART 147—SAFETY ZONES

1. The authority citation for part 147 continues to read as follows:

Authority: 14 U.S.C. 85; 43 U.S.C. 1333; Department of Homeland Security Delegation No. 0170.1.

2. Add § 147.843 to read as follows:

§ 147.843 Thunder Horse Semi-Submersible safety zone.

(a) *Description.* Thunder Horse Semi-Submersible, Mississippi Canyon 778 (MC 778), located at position 28°11′26″ N, 88°29′44″ W. The area within 500 meters (1640.4 feet) from each point on the structure's outer edge is a safety zone. These coordinates are based upon [NAD 83].

(b) *Regulation.* No vessel may enter or remain in this safety zone except the following:

(1) An attending vessel;

(2) A vessel under 100 feet in length overall not engaged in towing; or

(3) A vessel authorized by the Commander, Eighth Coast Guard District.

Dated: April 7, 2005.

R.F. Duncan,

Rear Admiral, U.S. Coast Guard, Commander, Eighth Coast Guard District.

[FR Doc. 05–8262 Filed 4–25–05; 8:45 am]

BILLING CODE 4910–15–P

ENVIRONMENTAL PROTECTION AGENCY

40 CFR Part 52

[R03–OAR–2004–PA–0002; FRL–7903–5]

Approval and Promulgation of Air Quality Implementation Plans; Pennsylvania; Revision to the Vehicle Inspection and Maintenance Program for the Philadelphia and Pittsburgh I/M Regions

AGENCY: Environmental Protection Agency (EPA).

ACTION: Proposed rule.

SUMMARY: EPA is proposing to approve a State Implementation Plan (SIP) revision submitted by the Commonwealth of Pennsylvania. This revision establishes mandatory onboard

diagnostic testing under the Commonwealth's motor vehicle inspection and maintenance (I/M) program, which applies to motorists in the I/M-designated areas (denoted by Pennsylvania as I/M Regions) of Philadelphia and Pittsburgh. This onboard diagnostic I/M testing applies only to 1996-and-newer vehicles that are already subject to Pennsylvania's existing I/M program and that are equipped with second generation on-board diagnostic systems (or OBD–II).

The Commonwealth's SIP revision also includes a revised I/M program regulation that is an updated version of the previously approved Pennsylvania I/M SIP. This revised regulation contains minor updates made by Pennsylvania to their I/M program since inception of enhanced I/M testing in the Pittsburgh and Philadelphia areas since 1997. However, these administrative changes (which affect the Commonwealth's entire I/M program in all regions) were also part of a separate I/M program SIP revision submitted by Pennsylvania on December 1, 2003. EPA is addressing those administrative, program-wide changes via a separate, simultaneous rulemaking action on that December 2003 SIP revision. Therefore, those administrative changes are not being readdressed by EPA here.

For purposes of this rulemaking action, only changes in the testing regimen applicable to the Philadelphia and Pittsburgh I/M Regions are addressed. The intended effect of this action is to propose approval of the Commonwealth's revised I/M program submitted to EPA on January 30, 2004, as amended on April 29, 2004. This action is being taken under the authority of the Clean Air Act.

DATES: Written comments must be received on or before May 26, 2005.

ADDRESSES: Submit your comments, identified by Regional Materials in Edocket (RME) ID Number R03–OAR–2004–PA–0002 by one of the following methods:

A. *Federal eRulemaking Portal: http://www.regulations.gov.* Follow the on-line instructions for submitting comments.

B. *Agency Web site: http://www.docket.epa.gov/rmepub/* RME, EPA's electronic public docket and comment system, is EPA's preferred method for receiving comments. Follow the on-line instructions for submitting comments.

C. *E-mail: campbell.dave@epa.gov.*

D. *Mail:* R03–OAR–2004–PA–0002, Dave Campbell, Chief, Air Quality Planning Branch, Mailcode 3AP21, U.S. Environmental Protection Agency, Region III, 650 Arch Street, Philadelphia, Pennsylvania 19103.

E. *Hand Delivery:* At the previously-listed EPA Region III address. Such deliveries are only accepted during the Docket's normal hours of operation and special arrangements should be made for deliveries of boxed information.

Instructions: Direct your comments to RME ID No. R03–OAR–2004–PA–0002. EPA's policy is that all comments received will be included in the public docket without change and may be made available online at *http://www.docket.epa.gov/rmepub/*, including any personal information provided, unless the comment includes information claimed to be Confidential Business Information (CBI) or other information whose disclosure is restricted by statute. Do not submit information that you consider to be CBI or otherwise protected through RME, regulations.gov or e-mail. The EPA RME and the Federal regulations.gov Web sites are an ''anonymous access'' system, which means EPA will not know your identity or contact information unless you provide it in the body of your comment. If you send an e-mail comment directly to EPA without going through RME or regulations.gov, your e-mail address will be automatically captured and included as part of the comment that is placed in the public docket and made available on the Internet. If you submit an electronic comment, EPA recommends that you include your name and other contact information in the body of your comment and with any disk or CD–ROM you submit. If EPA cannot read your comment due to technical difficulties and cannot contact you for clarification, EPA may not be able to consider your comment. Electronic files should avoid the use of special characters, any form of encryption and be free of any defects or viruses.

Docket: All documents in the electronic docket are listed in the RME index at *http://www.docket.epa.gov/rmepub/*. Although listed in the index, some information is not publicly available, *i.e.*, CBI or other information whose disclosure is restricted by statute. Certain other material, such as copyrighted material, is not placed on the Internet and will be publicly available only in hard copy form. Publicly available docket materials are available either electronically in RME or in hard copy during normal business hours at the Air Protection Division, U.S. Environmental Protection Agency, Region III, 1650 Arch Street, Philadelphia, Pennsylvania 19103. Copies of the State submittal are available at the Pennsylvania Department of Environmental Protection, Bureau of Air Quality, P.O. Box 8468, 400 Market Street, Harrisburg, Pennsylvania 17105.

FOR FURTHER INFORMATION CONTACT: Brian Rehn, by telephone at (215) 814–2176, or via e-mail at *rehn.brian@epa.gov.*

SUPPLEMENTARY INFORMATION: On January 30, 2004, the Pennsylvania Department of Environmental Protection (PA DEP) submitted a revision to its State Implementation Plan (SIP) for the enhanced I/M program that applies to vehicles registered in the Pittsburgh and Philadelphia I/M Regions. On April 29, 2004, PA DEP submitted a technical amendment to the January 30, 2004 SIP revision (hereafter referred to as the January 2004 SIP revision).

I. Background

The Clean Air Act (CAA) as amended in 1990 requires States to adopt an enhanced motor vehicle emissions inspection and maintenance (or I/M) program in selected areas. An I/M program is required based upon an area's air quality (*i.e.*, whether areas violate national ambient air quality standards), the population of its metropolitan centers and whether or not the State lies within the Ozone Transport Region established by the CAA. EPA set forth regulatory requirements to guide States in adoption of I/M programs in November 1992, subsequently revising those regulations on several occasions. These regulatory requirements, hereafter referred to as EPA's I/M requirements rule, are codified at 40 CFR part 51, subpart S.

A. Pennsylvania's Prior Enhanced I/M SIP and EPA's SIP Approval Actions

Pennsylvania adopted several iterations of enhanced I/M during the 1990s, culminating in the publication of a final I/M regulation in the September 27, 1997 edition of the *Pennsylvania Bulletin* (Vol. 27, No. 39), codified in Chapter 177 of the PA Code. Pennsylvania chose to adopt an I/M test network utilizing decentralized, privatized stations for operation of the program and submitted that program to EPA for SIP approval.

Through a series of rulemakings, EPA subsequently approved the Commonwealth's I/M program as part of the Pennsylvania SIP, culminating in a final rule granting full SIP approval published in the June 17, 1999 edition of the **Federal Register** (64 FR 32411). That prior I/M SIP approval action is hereafter referred to as EPA's June 1999 SIP approval, or simply as the June 1999 SIP approval. Pennsylvania

subsequently made a minor modification to the approved SIP in July of 2003 to revise its Acceleration Simulation Mode (or ASM) testing methodology and test standards that apply to the Philadelphia area program. EPA approved that revision on August 15, 2003 (68 FR 48803).

B. Federal On-Board Diagnostic Testing Requirements

The Clean Air Act as amended in 1990 requires States to incorporate checks of light-duty motor vehicle on-board diagnostic (OBD) systems into their I/M programs. These OBD checks are to be performed on vehicles equipped with second generation OBD systems (referred to as OBD–II). Such OBD–II-equipped vehicles were first introduced beginning in the 1994 model year, but were not available in every new light-duty vehicle until the 1996 model year. Since engines in these newer vehicles are largely electronically controlled, with their operation overseen by a computerized control unit, the operation of the engine and its supporting systems is monitored by the OBD–II software. The vehicle's OBD–II computer detects malfunctions in the operation of critical systems and components as they occur and stores information related to any such problem in its memory, while simultaneously triggering a dashboard warning light to alert the driver of a problem. Such OBD-monitored malfunctions may impact the level of air pollution emitted by the vehicle, therefore Congress required under the Clean Air Act that OBD checks be a mandatory part of I/M programs. An added benefit from OBD checks is that diagnostic information garnered from OBD checks provides for more accurate diagnosis of emission-related malfunctions than could otherwise be obtained from tailpipe emissions testing or visual inspection of the vehicles's emissions system components.

In November 1992, when EPA originally adopted its I/M requirements rule, Federal OBD–II certification standards had not yet been developed. EPA amended its 1992 I/M requirements rule in August 1996 to establish testing standards for I/M checks of OBD–II-equipped vehicles. On May 4, 1998 and again on April 5, 2001, EPA amended its I/M requirements rule specifically to address requirements for OBD checks to be performed as part of I/M programs. In order for the Commonwealth to implement these new OBD test requirements as part of its SIP's I/M program, Pennsylvania needed to amend its regulations and to submit those amendments to EPA as SIP revisions. The Commonwealth submitted two SIP revisions to EPA to incorporate OBD testing into its I/M program dated December 1, 2003 and January 30, 2004, respectively. These revisions address different geographic regions in Pennsylvania that are subject to I/M programs under the Clean Air Act. Together these SIP revisions amend the Commonwealth's prior approved I/M SIP, which EPA approved on June 17, 1999 (64 FR 32411).

EPA is proposing rulemaking action herein only upon the January 30, 2004 SIP revision. EPA is taking separate, simultaneous rulemaking action on the Commonwealth's December 1, 2003 I/M SIP revision. Please refer to that separate EPA rulemaking action for details on EPA's Federal approval of changes to the Pennsylvania I/M program that are not related to the emissions inspection testing performed in the Pittsburgh and Philadelphia areas.

II. Summary of Pennsylvania's January 2004 SIP Revision To Revise the Emissions Inspection Program for the Philadelphia and Pittsburgh Regions

On January 30, 2004, Pennsylvania submitted a revision to its enhanced I/M SIP approved by EPA on June 17, 1999 (64 FR 32411). The Commonwealth submitted a technical correction to the January 30, 2004 SIP revision on April 29, 2004. Hereafter, the corrected version is referred to as the January 2004 SIP revision. This January 2004 SIP revision serves several purposes. It serves to update the Commonwealth's emissions testing program to comply with recent changes to Federal requirements regarding incorporation of on-board diagnostic checks to enhanced I/M program areas. This SIP revision also amends the Commonwealth's prior approved SIP to alter the I/M test regimen for the Philadelphia and Pittsburgh Regions. The I/M program continues to apply on an annual basis to most 1975 and newer model year, gasoline-powered vehicles having a gross vehicle weight rating of 9,000 pounds or less that are registered in a I/M region, as defined by Pennsylvania regulation. However, pre-1996 vehicles that reach twenty-five model years in age will be required to undergo only a gas cap test and a visual inspection of certain emission control devices. Pre-1996 vehicles that are then 25 years old will no longer undergo tailpipe emissions testing.

The Philadelphia I/M Region is defined by Pennsylvania to encompass the Counties of Bucks, Chester, Delaware, Montgomery and Philadelphia. The Pittsburgh Region is comprised of Allegheny, Beaver, Washington and Westmoreland Counties. Emissions testing in both areas consists of an annual on-board diagnostic system check for 1996 and newer OBD–II-equipped vehicles and a gas cap leakage test (in order to verify a gas cap's ability to prevent evaporative hydrocarbon vapor from escaping).

Additionally, subject 1975 to 1995 vehicles (and heavy duty 1996 and newer subject vehicles) receive a gas cap leakage test and also undergo a visual anti-tampering inspection of emissions-related components. The anti-tampering inspection entails visual inspection of the following components, to ensure such components have not been removed or rendered inoperable: catalytic converter, exhaust gas recirculation (EGR) system, positive crankcase ventilation (PCV) valve, air pump, evaporative control system components and fuel tank inlet restrictor.

The type of tailpipe testing required in both the Philadelphia and Pittsburgh Regions is based upon vehicle weight and type and model year of the vehicle. Different testing regimen apply in the Philadelphia area (due to the severity of the air quality problem there) and the Pittsburgh area. The only notable change to the testing regimen from that of the prior Pennsylvania I/M SIP approved by EPA in June 1999 is, as was noted above, that pre-1996 vehicles that reach twenty-five model years in age will be required to undergo only a gas cap test and a visual inspection of certain emission control devices—but will not need to undergo tailpipe exhaust emissions testing in any form. By 2021, tailpipe exhaust emissions testing for all pre-1996 model year vehicles will be dropped altogether, in lieu of a gas cap check and a visual inspection only. Please refer to the technical support document prepared by EPA for this rulemaking action for a detailed description of the test regimen as it applies to specific vehicles (dependent on vehicle age, vehicle weight, vehicle type and the calender year of testing).

The Commonwealth's January 2004 SIP submission to EPA also includes additional supporting materials—including a new demonstration of compliance of the revised I/M programs for the Pittsburgh and Philadelphia Regions to Federal I/M performance-based standards. The Commonwealth has used MOBILE emission factor modeling to show that the program in each of these Regions meets Federal performance-based goals, as evaluated in calender year 2005 and 2007.

The Commonwealth's January 2004 SIP revision does not address minor

administrative changes made by Pennsylvania that make minor changes and updates to I/M programs regardless of which geographic region such programs apply. However, the Commonwealth's revised I/M regulation contained in the January 2004 SIP revision is reflective of these administrative changes. The Commonwealth provided supporting materials and their argument for these changes as part of its December 1, 2003 I/M SIP revision. That SIP revision also addresses changes to I/M testing performed in regions outside of Philadelphia and Pittsburgh and changes to the safety inspection program in non-I/M Regions of Pennsylvania. EPA is taking separate, simultaneous rulemaking action upon the December 1, 2003 SIP revision to address those program-wide, administrative changes as they apply to all I/M-subject Regions of the Commonwealth. Please refer to EPA's proposed rulemaking for the December 1, 2003 SIP for a discussion on these minor changes. Comments related to these provisions should be directed to the docket for the December 1, 2003 SIP rulemaking action (regardless of the geographic area of concern).

Certain language adopted by Pennsylvania as part of its I/M regulation, codified at 67 PA Code Chapter 177, has been redacted by Pennsylvania from the I/M SIP revisions. Specifically, this language is omitted from both the December 2003 and the January 2004 SIP revisions as submitted to EPA. This State regulatory language provides Pennsylvania the potential to phase-down/phase-out of I/M testing of pre-1996 subject vehicles at a point in time when pre-1996 vehicles make up a preset proportion of a given region's total, I/M-subject fleet. Since this language is excluded from the SIP revisions, it is not before EPA for consideration for inclusion to the Pennsylvania SIP.

The Commonwealth has also excluded regulatory language from both the December 2003 and January 2004 SIP submissions to EPA that would set the minimum repair expenditure for failing vehicles in need of I/M-related repairs (or waiver limit) at $150 for the first two years after commencement of a new I/M program. That language is, therefore, not under consideration by EPA as a revision to the Pennsylvania SIP.

III. Proposed Action

EPA is proposing to approve Pennsylvania's I/M SIP revision submitted on January 30, 2004, as amended by Pennsylvania via a technical correction on April 29, 2004. This SIP revision incorporates changes being made by Pennsylvania to its I/M program applicable in the Philadelphia and Pittsburgh I/M Regions as described herein.

For more information regarding EPA's detailed review of the Commonwealth's January 30, 2004 I/M SIP revision, please refer to the Technical Support Document (TSD) prepared by EPA in support of this rulemaking action. The TSD is part of the docket for this action and is available at the EPA office listed in the **ADDRESSES** portion of this proposed rulemaking. EPA is soliciting public comments on the issues discussed in this document. These comments will be considered before taking final action. Interested parties may participate in the Federal rulemaking procedure by submitting either electronic or written comments.

IV. Statutory and Executive Order Reviews

Under Executive Order 12866 (58 FR 51735, October 4, 1993), this proposed action is not a ''significant regulatory action'' and therefore is not subject to review by the Office of Management and Budget. For this reason, this action is also not subject to Executive Order 13211, ''Actions Concerning Regulations That Significantly Affect Energy Supply, Distribution, or Use'' (66 FR 28355 (May 22, 2001)). This action merely proposes to approve State law as meeting Federal requirements and imposes no additional requirements beyond those imposed by State law. Accordingly, the Administrator certifies that this proposed rule will not have a significant economic impact on a substantial number of small entities under the Regulatory Flexibility Act (5 U.S.C. 601 *et seq.*). Because this rule proposes to approve pre-existing requirements under State law and does not impose any additional enforceable duty beyond that required by State law, it does not contain any unfunded mandate or significantly or uniquely affect small governments, as described in the Unfunded Mandates Reform Act of 1995 (Pub. L. 104–4). This proposed rule also does not have a substantial direct effect on one or more Indian tribes, on the relationship between the Federal Government and Indian tribes, or on the distribution of power and responsibilities between the Federal Government and Indian tribes, as specified by Executive Order 13175 (65 FR 67249, November 9, 2000), nor will it have substantial direct effects on the states, on the relationship between the National Government and the States, or on the distribution of power and responsibilities among the various levels of government, as specified in Executive Order 13132 (64 FR 43255, August 10, 1999), because it merely proposes to approve a State rule implementing a Federal standard and does not alter the relationship or the distribution of power and responsibilities established in the Clean Air Act. This proposed rule also is not subject to Executive Order 13045 (62 FR 19885, April 23, 1997), because it is not economically significant.

In reviewing SIP submissions, EPA's role is to approve State choices, provided that they meet the criteria of the Clean Air Act. In this context, in the absence of a prior existing requirement for the State to use voluntary consensus standards (VCS), EPA has no authority to disapprove a SIP submission for failure to use VCS. It would thus be inconsistent with applicable law for EPA, when it reviews a SIP submission, to use VCS in place of a SIP submission that otherwise satisfies the provisions of the Clean Air Act. Thus, the requirements of section 12(d) of the National Technology Transfer and Advancement Act of 1995 (15 U.S.C. 272 note) do not apply. As required by section 3 of Executive Order 12988 (61 FR 4729, February 7, 1996), in issuing this proposed rule, EPA has taken the necessary steps to eliminate drafting errors and ambiguity, minimize potential litigation and provide a clear legal standard for affected conduct. EPA has complied with Executive Order 12630 (53 FR 8859, March 15, 1988) by examining the takings implications of the rule in accordance with the ''Attorney General's Supplemental Guidelines for the Evaluation of Risk and Avoidance of Unanticipated Takings'' issued under the executive order.

This proposed rule to approve a revision to Pennsylvania's motor vehicle inspection and maintenance Program for the Pittsburgh and Philadelphia Regions does not impose an information collection burden under the provisions of the Paperwork Reduction Act of 1995 (44 U.S.C. 3501 *et seq.*).

List of Subjects in 40 CFR Part 52

Environmental protection, Air pollution control, Carbon monoxide, Intergovernmental relations, Nitrogen dioxide, Ozone, Reporting and recordkeeping requirements, Volatile organic compounds.

Authority: 42 U.S.C. 7401 *et seq.*

Dated: April 19, 2005.

Richard Kampf,

Acting Regional Administrator, Region III.

[FR Doc. 05–8323 Filed 4–25–05; 8:45 am]

BILLING CODE 6560–50–P

ENVIRONMENTAL PROTECTION AGENCY

40 CFR Part 52

[R03–OAR–2004–PA–0001; FRL–7903–3]

Approval and Promulgation of Air Quality Implementation Plans; Pennsylvania; Revision to the Vehicle Inspection and Maintenance Program for the South Central and Northern Regions and New Safety Inspection Program Enhancements for Non-I/M Areas

AGENCY: Environmental Protection Agency (EPA).

ACTION: Proposed rule.

SUMMARY: EPA is proposing to approve a State Implementation Plan (SIP) revision submitted by the Commonwealth of Pennsylvania. This SIP revision amends Pennsylvania's prior, Federally approved enhanced vehicle inspection and maintenance (I/M) SIP, in particular to the I/M test type to apply to sixteen counties (Berks, Blair, Cambria, Centre, Cumberland, Dauphin, Erie, Lancaster, Lackawanna, Lebanon, Lehigh, Luzerne, Lycoming, Mercer, Northampton and York). Pennsylvania had previously adopted (but did not commence) a different form of testing for these counties, which EPA previously SIP-approved. Pennsylvania's revised SIP: Incorporates onboard diagnostic computer system checks for vehicles equipped with second generation onboard diagnostic systems (OBD–II) in the 8-county South Central Region (comprised of Berks, Dauphin, Cumberland, Lancaster, Lebanon, Lehigh and York Counties); applies different I/M test requirements for the South Central Region versus the 8-county Northern Region (comprised of Blair, Cambria, Centre, Erie, Lackawanna, Luzerne, Lycoming and Mercer Counties) in order to address the different air pollution concerns and vehicle fleets of those regions; revises Pennsylvania's motor vehicle safety inspection program (as it applies to forty-two counties not subject to Federal I/M program requirements) to include a visual inspection of safety-subject vehicles for the presence of certain emissions-related components, consistent with visual inspections performed under the I/M program in I/M-subject counties; revises the prior approved I/M SIP to incorporate miscellaneous program changes made by Pennsylvania since commencement of the enhanced I/M program in 1997 in the Pittsburgh and Philadelphia Regions; removes references in the prior approved SIP to the now defunct basic inspection program, which operated in the Allentown/Bethlehem/Easton program area until 1999. EPA proposes to approve Pennsylvania's I/M program revision submitted December 1, 2003, as amended April 24, 2004. This action is being taken under the authority of the Clean Air Act.

DATES: Written comments must be received on or before May 26, 2005.

ADDRESSES: Submit your comments, identified by Regional Material in EDocket (RME) ID Number R03–OAR–2004–PA–0001 by one of the following methods:

A. *Federal eRulemaking Portal: http://www.regulations.gov.* Follow the on-line instructions for submitting comments.

B. *Agency Web site: http://www.docket.epa.gov/rmepub/* RME, EPA's electronic public docket and comment system, is EPA's preferred method for receiving comments. Follow the on-line instructions for submitting comments.

C. *E-mail: campbell.dave@epa.gov.*

D. *Mail:* R03–OAR–2004–PA–0001, Dave Campbell, Chief, Air Quality Planning Branch, Mailcode 3AP21, U.S. Environmental Protection Agency, Region III, 1650 Arch Street, Philadelphia, Pennsylvania 19103.

E. *Hand Delivery:* At the previously-listed EPA Region III address. Such deliveries are only accepted during the Docket's normal hours of operation, and special arrangements should be made for deliveries of boxed information.

Instructions: Direct your comments to RME ID No. R03–OAR–2004–PA–0001. EPA's policy is that all comments received will be included in the public docket without change, and may be made available online at *http://www.docket.epa.gov/rmepub/,* including any personal information provided, unless the comment includes information claimed to be Confidential Business Information (CBI) or other information whose disclosure is restricted by statute. Do not submit information that you consider to be CBI or otherwise protected through RME, regulations.gov or e-mail. The EPA RME and the Federal regulations.gov Web sites are an ''anonymous access'' system, which means EPA will not know your identity or contact information unless you provide it in the body of your comment. If you send an e-mail comment directly to EPA without going through RME or regulations.gov, your e-mail address will be automatically captured and included as part of the comment that is placed in the public docket and made available on the Internet. If you submit an electronic comment, EPA recommends that you include your name and other contact information in the body of your comment and with any disk or CD–ROM you submit. If EPA cannot read your comment due to technical difficulties and cannot contact you for clarification, EPA may not be able to consider your comment. Electronic files should avoid the use of special characters, any form of encryption and be free of any defects or viruses.

Docket: All documents in the electronic docket are listed in the RME index at *http://www.docket.epa.gov/rmepub/.* Although listed in the index, some information is not publicly available, *i.e.*, CBI or other information whose disclosure is restricted by statute. Certain other material, such as copyrighted material, is not placed on the Internet and will be publicly available only in hard copy form. Publicly available docket materials are available either electronically in RME or in hard copy during normal business hours at the Air Protection Division, U.S. Environmental Protection Agency, Region III, 1650 Arch Street, Philadelphia, Pennsylvania 19103. Copies of the State submittal are available at the Pennsylvania Department of Environmental Protection, Bureau of Air Quality, P.O. Box 8468, 400 Market Street, Harrisburg, Pennsylvania 17105.

FOR FURTHER INFORMATION CONTACT: Brian Rehn, (215) 814–2176, or by e-mail at *rehn.brian@epa.gov.*

SUPPLEMENTARY INFORMATION:

I. Background

The Clean Air Act (CAA) as amended in 1990 requires states to adopt an enhanced motor vehicle emissions inspection and maintenance program for selected areas. An I/M program is required based upon an area's air quality (*i.e.*, whether areas violate national ambient air quality standards), the population of its metropolitan centers and whether or not the state lies within the Ozone Transport Region established by the CAA. EPA set forth regulatory requirements to guide states in adoption of I/M programs in November 1992, subsequently revising those regulations on several occasions. These regulatory requirements, hereafter referred to as EPA's I/M requirements

rule, are codified at 40 CFR Part 51, Subpart S.

A. Pennsylvania's Prior Enhanced I/M SIP and EPA's SIP Approval Actions

Pennsylvania adopted several iterations of enhanced I/M during the 1990s, culminating in the publication of a final I/M regulation in the September 27, 1997 edition of the *Pennsylvania Bulletin* (Vol. 27, No. 39), codified in Chapter 177 of the Pa Code. Pennsylvania submitted its adopted program to EPA as a SIP revision. That program utilized a decentralized I/M testing network comprised of privately owned stations for operation of the program.

Through a series of rulemakings, EPA subsequently approved the Commonwealth's I/M program as part of the Pennsylvania SIP, culminating in a final rule granting full SIP approval published in the June 17, 1999 edition of the **Federal Register** (64 FR 32411). That prior I/M SIP approval action is hereafter referred to as EPA's June 1999 SIP approval, or simply as the June 1999 SIP approval. Pennsylvania subsequently made a minor modification to the approved SIP in July of 2003 to revise its Acceleration Simulation Mode (or ASM) testing methodology and test standards that apply to the Philadelphia area program. EPA approved that revision on August 15, 2003 (68 FR 48803).

B. Federal On-Board Diagnostic Testing Requirements

The Clean Air Act as amended in 1990 requires states to incorporate checks of light-duty motor vehicle on-board diagnostic (OBD) systems as part of their I/M programs. These OBD checks are to be performed on vehicles having second generation OBD systems, referred to as OBD–II. Vehicles equipped with OBD–II systems were first introduced beginning in the 1994 model year, but not every car sold was fully compliant with OBD–II standards for light-duty vehicles until the 1996 model year. Since engines in these newer vehicles are largely electronically controlled (with their operation overseen by computerized control unit) the operation of the engine and its supporting systems can be monitored with proper software. The vehicle's OBD–II computer can detect malfunctions in the operation of critical systems and components, storing information related to any malfunction in its memory and simultaneously triggering a dashboard warning light to alert the driver of a problem. OBD-monitored malfunctions may impact air pollution emissions from the vehicle, therefore, Congress required OBD checks as a mandatory element of I/M programs under the Clean Air Act. An additional benefit of OBD testing is that diagnostic information provided by these systems provides for more accurate diagnosis of emission-related malfunctions than can otherwise be obtained from tailpipe emissions testing or from visual inspection of the vehicle emissions system.

When EPA originally adopted its I/M requirements rule in 1992, Federal OBD–II certification standards had not yet been developed. EPA later amended its I/M requirements rule in August 1996 to establish testing standards for I/M checks of OBD–II-equipped vehicles. On May 4, 1998 and again on April 5, 2001, EPA amended its I/M requirements rule specifically to address requirements for OBD checks to be performed as part of I/M programs. In order for the Commonwealth to implement these new OBD test requirements as part of its SIP's I/M program, Pennsylvania needed to amend its regulations and to submit those amendments to EPA as SIP revisions. The Commonwealth submitted two SIP revisions to EPA to incorporate OBD testing into its I/M program—one on December 1, 2003 and one on January 30, 2004. EPA is proposing rulemaking action here only upon the December 1, 2003 SIP revision. EPA is proposing a rulemaking action on the January 30, 2004 SIP revision in a separate rulemaking action. Together these SIP revisions amend the Commonwealth's prior approved I/M SIP, which EPA approved on June 17, 1999 (64 FR 32411).

II. Summary of Pennsylvania's December 2003 SIP Revision—Description of the Revised Emissions and Safety Inspection Programs

On December 1, 2003, Pennsylvania submitted a revision to its enhanced I/M SIP approved by EPA on June 17, 1999 (64 FR 32411). The Commonwealth submitted a technical correction to the December 1, 2003 SIP revision on April 29, 2004. Hereafter, the corrected version is referred to as the December 2003 SIP revision. This December 2003 SIP revision serves several purposes. First, the SIP revision updates the Commonwealth's emissions testing program to comply with recent changes to Federal requirements regarding incorporation of on-board diagnostic checks to enhanced I/M program areas. Second, the SIP revision amends the prior approved SIP to alter the I/M program design to be implemented in sixteen counties where enhanced I/M had been required under prior versions of state regulation and the approved SIP.

The Commonwealth's December 2003 SIP revision revises the emissions testing regimen that will apply to sixteen previously subject counties now designated as the South Central and Northern I/M Regions. Emissions testing will continue to apply to most 1975 and newer model year, gasoline powered vehicles having a gross vehicle weight rating of 9,000 pounds or less that are registered in an I/M region. Those vehicles that are exempted or excluded from testing include current model year vehicles and any otherwise subject vehicle which has traveled less than 5,000 miles in the previous year. Emissions testing continues to be required on an annual basis, in coordination with a Pennsylvania safety inspection.

Pennsylvania's December 2003 SIP revision contains modifications to the emissions testing regulations at Chapter 177 of Title 67 of the Pennsylvania Code and public notice from the Department of Transportation that certifies that I/M testing implementation is to be phased in beginning December 1, 2003. The revised emission regulation establishes differing emissions testing regimen for each subject I/M Region. The South Central I/M Region is defined to encompass the Counties of Berks, Cumberland, Dauphin, Lancaster, Lebanon, Lehigh, Northampton and York. Emissions testing there consists of an annual on-board diagnostic system check for 1996 and newer OBD–II-equipped vehicles and a gas cap leakage test (in order to verify a gas cap's ability to prevent evaporative hydrocarbon vapor from escaping). Additionally, the subject 1975 to 1995 vehicles receive a gas cap leakage test and will also undergo a visual anti-tampering inspection of emissions-related components. The Commonwealth applies the same anti-tampering inspection in all emissions and safety program counties, entailing visual inspection of the following components to ensure such components have not been removed or rendered inoperable: Catalytic converter, exhaust gas recirculation (EGR) system, positive crankcase ventilation (PCV) valve, air pump, evaporative control system components, and fuel tank inlet restrictor.

The SIP revision defines the Northern I/M Region to include the Counties of Blair, Cambria, Centre, Erie, Lackawanna, Luzerne, Lycoming and Mercer. Emissions testing there consists of visual anti-tampering inspection of 1975 and newer vehicles, as described above, and a gas cap leakage test of

those same vehicles. Testing in the Northern Region program varies from that of the South Central Region in that the Commonwealth does not require OBD I/M checks as part of the Northern Region.

The December 1, 2003 SIP revision also contains amendments to the Commonwealth's motor vehicle safety inspection program, which is codified at Chapter 175 of Title 67 of the Pennsylvania Code. Under this revised safety inspection program, vehicles registered in counties not subject to emissions testing under Pennsylvania I/M regulation (at Chapter 177 of Title 67) must undergo a visual anti-tampering inspection as part of the safety inspection. This safety program visual inspection applies in forty-two of the Commonwealth's sixty-seven counties. The result is that Pennsylvania now requires an annual visual anti-tampering inspection on a statewide basis for 1975 to 1995 vehicles through either the applicable I/M or safety inspection program. In the Non-I/M areas subject to the safety inspection program, anti-tampering inspection applies on a broader basis to include vehicles older than 1975 and newer than 1995. Addition of the anti-tampering inspection in Non-I/M areas as part of the safety inspection program applies to the following Counties: Adams, Armstrong, Bedford, Bradford, Butler, Cameron, Carbon, Clarion, Clearfield, Clinton, Columbia, Crawford, Elk, Fayette, Forest, Franklin, Fulton, Greene, Huntington, Indiana, Jefferson, Juniata, Lawrence, McKean, Mifflin, Monroe, Montour, Northumberland, Perry, Pike, Potter, Schuylkill, Snyder, Somerset, Sullivan, Susquehanna, Tioga, Union, Venango, Warren, Wayne and Wyoming.

The December 2003 SIP includes additional materials, including revised emissions benefits modeling supporting the changes in the emissions and safety inspection programs, new test equipment specifications for OBD inspection equipment, new inspection procedures for visual anti-tampering program, stand alone test equipment specifications for OBD and visual testing, supplements to Pennsylvania's contract for management of the I/M program, sample vehicle inspection reports and other miscellaneous support documents.

The Commonwealth's December 2003 SIP revision does not address changes to the I/M programs in the Pittsburgh and Philadelphia Regions, except in cases where updates to the Commonwealth's regulations affect all I/M-subject regions. Pennsylvania has submitted separate SIP revisions to EPA to address changes specific to the Pittsburgh and Philadelphia I/M programs. Those SIP revisions are the subject of a separate rulemaking(s).

Finally, Pennsylvania's December 2003 SIP revision submittal to EPA does not include regulatory language adopted as part of Pennsylvania regulation that would phase-down/phase-out I/M testing of pre-1996 subject vehicles at a point in time when pre-1996 vehicles make up less than a certain portion of the region's total I/M subject fleet. The Commonwealth has also not included in its December 2003 SIP revision submittal to EPA the language in its regulation that would set the minimum repair expenditure for failing vehicles in need of I/M-related repairs (or waiver limit) at $150 for the first two years after commencement of a new I/M program. Neither of these state regulatory provisions was submitted as part of the SIP and therefore these provisions are not under consideration by EPA as a revision to the Pennsylvania SIP.

III. Proposed Action

EPA is proposing to approve Pennsylvania's I/M SIP revision submitted on December 1, 2003, as amended by a technical correction on April 29, 2004. This SIP revision incorporates changes being made by Pennsylvania to its I/M program in general and specifically with regard to the program testing regimen in the South Central and Northern I/M Regions as described herein.

EPA is also proposing to approve Pennsylvania's visual anti-tampering inspection (under the safety inspection program in the Non-I/M Regions) as a SIP strengthening air quality control measure, not as an enhanced I/M program pursuant to EPA's I/M requirement rule (at 40 CFR 51, Subpart S). While anti-tampering testing is not required in the Non-I/M Region counties of Pennsylvania, Pennsylvania has voluntarily undertaken this measure to bolster emissions reductions towards meeting the goals of the other areas of the Commonwealth that are subject to I/M program testing. The Non-I/M Region anti-tampering inspection program was not undertaken in support of any currently existing air quality rate of progress, attainment or maintenance plan. However, the Non-I/M program for the affected fourty-two counties does provide a minor benefit toward the I/M performance standard demonstration for the sixteen counties comprising the South Central and Northern Regions. EPA therefore proposes to incorporate the safety inspection program for Non-I/M Regions into the SIP as a SIP strengthening measure, in that it does reduce ozone-related pollution and that it may provide benefit to neighboring areas that violate the National Ambient Air Quality Standards (NAAQS) for ozone. For more information regarding EPA's detailed review of the Commonwealth's December 30, 2003 I/M SIP revision, please refer to the Technical Support Document (TSD) prepared by EPA in support of this rulemaking action. The TSD is part of the docket for this action, and is available at the EPA office listed in the **ADDRESSES** portion of this proposed rulemaking. EPA is soliciting public comments on the issues discussed in this document. These comments will be considered before taking final action. Interested parties may participate in the Federal rulemaking procedure by submitting either electronic or written comments.

IV. Statutory and Executive Order Reviews

Under Executive Order 12866 (58 FR 51735, October 4, 1993), this proposed action is not a ''significant regulatory action'' and therefore is not subject to review by the Office of Management and Budget. For this reason, this action is also not subject to Executive Order 13211, ''Actions Concerning Regulations That Significantly Affect Energy Supply, Distribution, or Use'' (66 FR 28355 (May 22, 2001)). This action merely proposes to approve state law as meeting Federal requirements and imposes no additional requirements beyond those imposed by state law. Accordingly, the Administrator certifies that this proposed rule will not have a significant economic impact on a substantial number of small entities under the Regulatory Flexibility Act (5 U.S.C. 601 *et seq.*). Because this rule proposes to approve pre-existing requirements under state law and does not impose any additional enforceable duty beyond that required by state law, it does not contain any unfunded mandate or significantly or uniquely affect small governments, as described in the Unfunded Mandates Reform Act of 1995 (Pub. L. 104–4). This proposed rule also does not have a substantial direct effect on one or more Indian tribes, on the relationship between the Federal Government and Indian tribes, or on the distribution of power and responsibilities between the Federal Government and Indian tribes, as specified by Executive Order 13175 (65 FR 67249, November 9, 2000), nor will it have substantial direct effects on the States, on the relationship between the national government and the States, or on the distribution of power and responsibilities among the various

levels of government, as specified in Executive Order 13132 (64 FR 43255, August 10, 1999), because it merely proposes to approve a state rule implementing a Federal standard and does not alter the relationship or the distribution of power and responsibilities established in the Clean Air Act. This proposed rule also is not subject to Executive Order 13045 (62 FR 19885, April 23, 1997), because it is not economically significant.

In reviewing SIP submissions, EPA's role is to approve state choices, provided that they meet the criteria of the Clean Air Act. In this context, in the absence of a prior existing requirement for the state to use voluntary consensus standards (VCS), EPA has no authority to disapprove a SIP submission for failure to use VCS. It would thus be inconsistent with applicable law for EPA, when it reviews a SIP submission, to use VCS in place of a SIP submission that otherwise satisfies the provisions of the Clean Air Act. Thus, the requirements of section 12(d) of the National Technology Transfer and Advancement Act of 1995 (15 U.S.C. 272 note) do not apply. As required by section 3 of Executive Order 12988 (61 FR 4729, February 7, 1996), in issuing this proposed rule, EPA has taken the necessary steps to eliminate drafting errors and ambiguity, minimize potential litigation and provide a clear legal standard for affected conduct. EPA has complied with Executive Order 12630 (53 FR 8859, March 15, 1988) by examining the takings implications of the rule in accordance with the ''Attorney General's Supplemental Guidelines for the Evaluation of Risk and Avoidance of Unanticipated Takings'' issued under the executive order. This proposed rule to approve a revision to Pennsylvania's prior SIP-approved I/M program does not impose an information collection burden under the provisions of the Paperwork Reduction Act of 1995 (44 U.S.C. 3501 *et seq.*).

List of Subjects in 40 CFR Part 52

Environmental protection, Air pollution control, Carbon monoxide, Intergovernmental relations, Nitrogen dioxide, Ozone, Reporting and record keeping requirements, Volatile organic compounds.

Authority: 42 U.S.C. 7401 *et seq.*

Dated: April 15, 2005.

Richard Kampf,

Acting Regional Administrator, Region III.

[FR Doc. 05–8324 Filed 4–25–05; 8:45 am]

BILLING CODE 6560–50–P

ENVIRONMENTAL PROTECTION AGENCY

40 CFR Part 52

[RME–OAR–2005–MD–0002; FRL–7904–3]

Approval and Promulgation of Air Quality Implementation Plans; Maryland; Clarification of Visible Emissions Exception Provisions

AGENCY: Environmental Protection Agency (EPA).

ACTION: Proposed rule.

SUMMARY: EPA proposes to approve the State Implementation Plan (SIP) revision submitted by the State of Maryland Department of the Environment for the purpose of clarifying exception provisions of the visible emissions regulations for several source categories. In the Final Rules section of this **Federal Register**, EPA is approving the State's SIP submittal as a direct final rule without prior proposal because the Agency views this as a noncontroversial submittal and anticipates no adverse comments. A detailed rationale for the approval is set forth in the direct final rule. If no adverse comments are received in response to this action, no further activity is contemplated. If EPA receives adverse comments, the direct final rule will be withdrawn and all public comments received will be addressed in a subsequent final rule based on this proposed rule. EPA will not institute a second comment period. Any parties interested in commenting on this action should do so at this time.

DATES: Comments must be received in writing by May 26, 2005.

ADDRESSES: Submit your comments, identified by Regional Material in EDocket (RME) ID Number RME–OAR–2005–MD–0002 by one of the following methods:

A. *Federal eRulemaking Portal: http://www.regulations.gov.* Follow the online instructions for submitting comments.

B. *Agency Web Site: http://www.docket.epa.gov/rmepub/* RME, EPA's electronic public docket and comment system, is EPA's preferred method for receiving comments. Follow the online instructions for submitting comments.

C. *E-mail: morris.makeba@epa.gov.*

D. *Mail:* RME–OAR–2005–MD–0002, Makeba Morris, Chief, Air Quality Planning Branch, Mailcode 3AP21, U.S. Environmental Protection Agency, Region III, 1650 Arch Street, Philadelphia, Pennsylvania 19103.

E. *Hand Delivery:* At the previously-listed EPA Region III address. Such deliveries are only accepted during the Docket's normal hours of operation, and special arrangements should be made for deliveries of boxed information.

Instructions: Direct your comments to RME ID No. RME–OAR–2005–MD–0002. EPA's policy is that all comments received will be included in the public docket without change, and may be made available online at *http://www.docket.epa.gov/rmepub/,* including any personal information provided, unless the comment includes information claimed to be Confidential Business Information (CBI) or other information whose disclosure is restricted by statute. Do not submit information that you consider to be CBI or otherwise protected through RME, regulations.gov or e-mail. The EPA RME and the Federal regulations.gov Web sites are an ''anonymous access'' system, which means EPA will not know your identity or contact information unless you provide it in the body of your comment. If you send an e-mail comment directly to EPA without going through RME or regulations.gov, your e-mail address will be automatically captured and included as part of the comment that is placed in the public docket and made available on the Internet. If you submit an electronic comment, EPA recommends that you include your name and other contact information in the body of your comment and with any disk or CD–ROM you submit. If EPA cannot read your comment due to technical difficulties and cannot contact you for clarification, EPA may not be able to consider your comment. Electronic files should avoid the use of special characters, any form of encryption, and be free of any defects or viruses.

Docket: All documents in the electronic docket are listed in the RME index at *http://www.docket.epa.gov/rmepub/.* Although listed in the index, some information is not publicly available, i.e., CBI or other information whose disclosure is restricted by statute. Certain other material, such as copyrighted material, is not placed on the Internet and will be publicly available only in hard copy form. Publicly available docket materials are available either electronically in RME or in hard copy during normal business hours at the Air Protection Division, U.S. Environmental Protection Agency, Region III, 1650 Arch Street, Philadelphia, Pennsylvania 19103. Copies of the State submittal are available at the Maryland Department of the Environment, 1800 Washington Boulevard, Suite 705, Baltimore, Maryland 21230.

FOR FURTHER INFORMATION CONTACT: Linda Miller, (215) 814–2068, or by e-mail at *miller.linda@epa.gov.*

SUPPLEMENTARY INFORMATION: For further information on the SIP revision to clarify exceptions to visible emissions requirements, please see the information provided in the direct final action, with the same title, that is located in the ''Rules and Regulations'' section of this **Federal Register** publication. Please note that if EPA receives adverse comment on an amendment, paragraph, or section of this rule and if that provision may be severed from the remainder of the rule, EPA may adopt as final those provisions of the rule that are not the subject of an adverse comment.

Dated: April 19, 2005.

Richard J. Kampf,

Acting Regional Administrator, Region III.

[FR Doc. 05–8318 Filed 4–25–05; 8:45 am]

BILLING CODE 6560–50–P

Notices

Federal Register
Vol. 70, No. 79
Tuesday, April 26, 2005

This section of the FEDERAL REGISTER contains documents other than rules or proposed rules that are applicable to the public. Notices of hearings and investigations, committee meetings, agency decisions and rulings, delegations of authority, filing of petitions and applications and agency statements of organization and functions are examples of documents appearing in this section.

DEPARTMENT OF AGRICULTURE

Privacty Act: System of Records

AGENCY: Office of the Secretary, Agriculture.

ACTION: Notice of proposed revision of Privacy Act System of Records.

SUMMARY: In accordance with the Privacy Act 5 U.S.C. 552(a)(e)(11), the United States Department of Agriculture (''USDA'') Office of Inspector General (''OIG'') proposes to revise two of its systems of records, USDA/OIG–3: Investigative Files and Automated Investigative Indices System and USDA/OIG–4: IG Hotline Complaint Records. These systems of records were last published in the **Federal Register** on November 17, 1997, on pages 61262–61266, 62 FR 61262, *et seq.*

EFFECTIVE DATE: This notice will be adopted without further publication in the **Federal Register** on June 27, 2005, unless modified by a subsequent notice to incorporate comments received from the public. Although the Privacy Act requires only that the portion of the system which describes the ''routine uses'' of the system be published for comment, USDA invites comment on all portions of this notice. Comments must be received by the contact person listed below on or before the proposed routine uses will become effective as proposed without further notice on May 26, 2005.

FOR FURTHER INFORMATION CONTACT: David Gray, Counsel to the Inspector General, Office of Inspector General, U.S. Department of Agriculture, 1400 Independence Avenue, SW., Room 41–W, Washington, DC 20250–2308, telephone: (202) 720–9110, Facsimile: (202) 690–1528, e-mail: *drgray@oig.usda.gov.*

SUPPLEMENTARY INFORMATION: The OIG proposes revising existing routine use by deleting one half of one sentence of an existing routine use to avoid referring to another Agency's Regulations and to add two routine uses to the routine uses currently applicable to OIG's systems of records to permit disclosure under two systems of records. The first addition is for purposes of internal and external peer reviews of the OIG's Office of Investigations specifically relating to the systems of USDA/OIG–3: Investigative Files and Automated Investigative Indices System, and USDA/OIG–4: IG Hotline Complaint Records. The second routine use also applies to these same systems of records to allow disclosure of these records to the President's Council on Integrity and Efficiency (PCIE) and other Federal agencies, when these entities conduct an audit or investigation pursuant to Executive Order 12993.

The current language of routine use numbered 13 in both systems of records is as follows:

(13) Relevant information from a system of records may be disclosed to the news media and general public where there exists a legitimate public interest, *e.g.,* to assist in the location of fugitives, to provide notification of arrests, where necessary for protection from imminent threat of life or property, or in accordance with guidelines set out by the Department of Justice in 28 CFR 50.2.

The proposed revision deletes the last part of the sentence, to end the sentence after the word ''property.'' Thus, the end of the sentence that refers to the Department of Justice guidelines and its regulatory citation is deleted. The revised routine use will then read as follows:

(13) Relevant information from a system of records may be disclosed to the news media and general public where there exists a legitimate public interest, *e.g.,* to assist in the location of fugitives, to provide notification of arrests, or where necessary for protection from imminent threat of life or property.

The first added routine use is proposed to reflect an amendment to the Inspector General Act of 1978, pursuant to VIII, Subtitle B, Section 812(7) of the Department of Homeland Security Act of 2002, which reads as follows: ''To ensure the proper exercise of the law enforcement powers authorized by this subsection, the OIG described under paragraph (3) shall, not later than 180 days after the date of enactment of this subsection, collectively enter into a memorandum of understanding to establish an external review process for ensuring that adequate internal safeguards and management procedures continue to exist within each Office and within any Office that later receives an authorization under paragraph (2). The review process shall be established in consultation with the Attorney General, who shall be provided with a copy of the memorandum of understanding that established the review process. Under the review process, the exercise of the law enforcement powers by each Office of Inspector General shall be reviewed periodically by another Office of Inspector General or by a committee of Inspectors General. The results of each review shall be communicated in writing to the applicable Inspector General and to the Attorney General.''

The second added routine use is proposed to enable an OIG to assist other OIGs with internal audits or investigations required by the PCIE under Executive Order 12993, but which cannot or should not be performed by the staff of a particular OIG that would normally conduct the investigation, and to allow reports to be reviewed by the PCIE regarding actions taken with respect to these investigations. This routine use will allow the OIG to conduct assigned audits or investigations under Executive Order 12993 and to report its findings, recommendations and actions taken to the PCIE. It will also allow the release of information to other agencies conducting internal audits or investigations of the OIG.

The text of the addition of the added routine uses (to be numbered 14 and 15) to systems USDA/OIG–3 and USDA/OIG–4 will read as follows:

(14) A record may be disclosed to any official charged with the responsibility to conduct qualitative assessment reviews or peer reviews of internal safeguards and management procedures employed in investigative operations. This disclosure category includes members of the President's Council on Integrity and Efficiency and officials and administrative staff within their investigative chain of command, as well as authorized officials of the Department of Justice and the Federal Bureau of Investigation.

(15) In the event that these records respond to an audit, investigation or review, which is conducted pursuant to

an authorizing law, rule or regulation, and in particular those conducted at the request of the President's Council on Integrity and Efficiency (''PCIE'') pursuant to Executive Order 12993, the records may be disclosed to the PCIE and other Federal agencies, as necessary.

All other aspects of OIG's systems of records remain unchanged and are as published, other than systems of records' locations, which are updated as set forth in Attachment A. A ''Report on New System,'' required by 5 U.S.C. 552a(r), as implemented by OMB Circular A–130, was sent to the Chairman, Committee on Homeland Security and Governmental Affairs, United States Senate; the Chairman, Committee on Government Reform, House of Representatives; and the Administrator, Office of Information and Regulatory Affairs, Office of Management and Budget on April 19, 2005.

Dated: April 19, 2005.

Mike Johanns,

Secretary of Agriculture.

USDA/OIG–3

SYSTEM NAME:

Investigative Files and Automated Investigative Indices Systems, USDA/OIG.

* * * * *

ROUTINE USES OF RECORDS MAINTAINED IN THE SYSTEM, INCLUDING CATEGORIES OF USERS AND THE PURPOSES OF SUCH USES:

In addition to those disclosures generally permitted under subsection (b) of the Privacy Act of 1974, 5 U.S.C. 552a(b), records may also be disclosed routinely to other users under the following circumstances:

* * * * *

(13) Relevant information from a system of records may be disclosed to the news media and general public where there exists a legitimate public interest, *e.g.*, to assist in the location of fugitives, to provide notification of arrests, or where necessary for protection from imminent threat of life or property.

(14) A record may be disclosed to any official charged with the responsibility to conduct qualitative assessment reviews or peer reviews of internal safeguards and management procedures employed in investigative operations. This disclosure category includes members of the President's Council on Integrity and Efficiency and officials and administrative staff within their investigative chain of command, as well as authorized officials of the Department of Justice and the Federal Bureau of Investigation.

(15) In the event that these records respond to an audit, investigation or review, which is conducted pursuant to an authorizing law, rule or regulation, and in particular those conducted at the request of the President's Council on Integrity and Efficiency (''PCIE'') pursuant to Executive Order 12993, the records may be disclosed to the PCIE and other Federal agencies, as necessary.

* * * * *

USDA/OIG–4

SYSTEM NAME:

OIG Hotline Complaint Records, USDA/OIG.

In addition to those disclosures generally permitted under subsection (b) of the Privacy Act of 1974, 5 U.S.C. 552a(b), records may also be disclosed routinely to other users under the following circumstances:

* * * * *

(13) Relevant information from a system of records may be disclosed to the news media and general public where there exists a legitimate public interest, *e.g.*, to assist in the location of fugitives, to provide notification of arrests, or where necessary for protection from imminent threat of life or property.

(14) A record may be disclosed to any official charged with the responsibility to conduct qualitative assessment reviews or peer reviews of internal safeguards and management procedures employed in investigative operations. This disclosure category includes members of the President's Council on Integrity and Efficiency and officials and administrative staff within their investigative chain of command, as well as authorized officials of the Department of Justice and the Federal Bureau of Investigation.

(15) In the event that these records respond to an audit, investigation or review, which is conducted pursuant to an authorizing law, rule or regulation, and in particular those conducted at the request of the President's Council on Integrity and Efficiency (''PCIE'') pursuant to Executive Order 12993, the records may be disclosed to the PCIE and other Federal agencies, as necessary.

SYSTEM LOCATION:

In the headquarters offices of the U.S. Department of Agriculture (USDA), Office of Inspector General (OIG) and in the Jamie L. Whitten Federal Building, 1400 Independence Avenue, SW, Washington, DC 20250, and in the following OIG regional offices and sub offices, as listed in Attachment A.

Attachment A

OIG Regional Offices

Northeast Region/Investigations and Northeast Region/Audit, 5601 Sunnyside Avenue, Suite 2–2230, Beltsville, Maryland 20705–5300

Southeast Region, 401 W. Peachtree Street NW., Room 2329 (Investigations), Room 2328 (Audit), Atlanta, Georgia 30308

Midwest Region, 111 N. Canal Street, Suite 1130, Chicago, Illinois 60606–7295

Southwest Region, 101 South Main, Room 311 (Investigations), Room 324 (Audit), Temple, Texas 76501

Great Plains Region, 8930 Ward Parkway, Suite 3016, Kansas City, Missouri 64114

Western Region, 75 Hawthorne Street, Suite 200, San Francisco, California 94105–3920

OIG/Audit Sub Offices

Mercer Corporate Park, 310 Corporate Boulevard, Robbinsville, New Jersey 08691–1598

One Credit Union Place, Suite 350, Harrisburg, Pennsylvania 17110–2992

26 Federal Plaza, Room 1415, New York, New York 10278

IBM Building, Suite 600, 654 Munoz Rivera Avenue, Hato Rey, Puerto Rico 00918–4118

3101 Park Center Drive, Suite 1128, Alexandria, Virginia 22302

3008 NW. 13th Street, Suite B, Gainesville, Florida 32609

111 East Capitol Street, Suite 425, Jackson, Mississippi 39201

233 Cumberland Bend, Room 118, Nashville, Tennessee 37228

4407 Bland Road, Room 100, Raleigh, North Carolina 27609

299 East Broward Boulevard, Federal Building, Room 410, Box 14, Ft. Lauderdale, Florida 33301

200 N. High Street, Room 346, Columbus, Ohio 43215–2408

375 Jackson Street, Suite 620, St. Paul, Minnesota 55101–1850

3001 Coolidge Road, Suite 150, East Lansing, Michigan 48823–6321

1114 Commerce Street, Santa Fe Building, Suite 202, Dallas, Texas 75242

100 Centennial Mall North, Room 276, Lincoln, Nebraska 68508

13800 Old Gentilly Road, Building 350, Post J4, New Orleans, Louisiana 70129

2150 Centre Avenue, Building A, Suite 138, Ft. Collins, Colorado 80526–1891

4300 Goodfellow Boulevard, Building 104F, 2nd Floor, Pole L2, St. Louis, Missouri 63120

Edith Green Wendell Wyatt Federal Office Building, 1220 SW. Third Avenue, Room 1640, Portland, Oregon 97204–2893

430 'G' Street, Davis, California 95616–4166

OIG/Investigations Sub Offices

26 Federal Plaza, Room 1409, New York, New York 10278–0004

54 Stiles Road, Suite 108, Salem, New Hampshire 03079

Bishop Curley Building, 421 S. Warren Street, Room 201, Syracuse, New York 13201

660 American Avenue, Suite 201, King of Prussia, Pennsylvania 19406–4032
4407 Bland Road, Room 110, Raleigh, North Carolina 27609
Federal Building, 400 N. 8th Street, Room 526, Richmond, Virginia 23240–1001
233 Cumberland Bend, Room 118, Nashville, Tennessee 37228
Robert Vance Federal Building, Room 414, 1800 5th Avenue, Birmingham, Alabama 35203–3702
3008 NW. 13th Street, Suite A, Gainesville, Florida 32609
299 East Broward Boulevard, Federal Building, Room 410, Box 14, Ft. Lauderdale, Florida 33301
200 North High Street, Room 350, Columbus, Ohio 43215–2408
3001 Coolidge Road, Suite 150, East Lansing, Michigan 48823–6321
6039 Lakeside Boulevard, Indianapolis, Indiana 46278–1989
U.S. Courthouse Building, 601 West Broadway, Room 617, Louisville, Kentucky 40202
1350 Euclid Avenue, Room 280, Cleveland, Ohio 44115–1815
1114 Commerce Street, Santa Fe Building, Suite 202, Dallas, Texas 75242
650 North Sam Houston Parkway East, Room 540, Houston, Texas 77060
700 West Capitol, Room 2528, Little Rock, Arkansas 72201
423 Canal Street, Room 331, New Orleans, Louisiana 70130
215 Dean A. McGee Street, Room 416, Oklahoma City, Oklahoma 73102
111 East Capitol Street, Suite 425, Jackson, Mississippi 39201
522 N. Central Avenue, Room 202, Phoenix, Arizona 85004
300 E. Main Street, Room 501, El Paso, Texas 79901
12136 W. Bayaud Avenue, Suite 210, Lakewood, Colorado 80228–2115
911 Washington Avenue, Suite 410, St. Louis, Missouri 63101
210 Walnut Street, Suite 573, Des Moines, Iowa 50309
140 N. Phillips Avenue, Suite 320, Sioux Falls, South Dakota 57101
100 Centennial Mall North, Room 282, Lincoln, Nebraska 68508
304 East Broadway, Room 336, Bismarck, North Dakota 58501
375 Jackson Street, Suite 620, St. Paul, Minnesota 55101–1850
1000 Second Avenue, Suite 1950, Seattle, Washington 98104
21660 E. Copley Drive, Suite 370, Diamond Bar, California 91765
300 Ala Moana Boulevard, Room S153, Honolulu, Hawaii 96850–0001
430 'G' Street, Davis, California 95616–4166
Edith Green Wendell Wyatt Federal Office Building, 1220 SW Third Avenue, Room 1640, Portland, Oregon 97204–2893
1130 'O' Street, Room 4201–E, Fresno, California 93721–2236
610 West Ash Street, Suite 707, San Diego, California 92101–3346

[FR Doc. 05–8221 Filed 4–25–05; 8:45 am]

BILLING CODE 3410–23–P

DEPARTMENT OF AGRICULTURE

Agricultural Marketing Service

[Docket Number FV–05–305]

United States Standards for Grades of Globe Artichokes

AGENCY: Agricultural Marketing Service, USDA.

ACTION: Notice.

SUMMARY: The Agricultural Marketing Service (AMS), prior to undertaking research and other work associated with revising official grade standards, is soliciting comments on the possible revisions to the United States Standards for Grades of Globe Artichokes. At a 2003 meeting with the Fruit and Vegetable Industry Advisory Committee, AMS was asked to review all the fresh fruit and vegetable grade standards for usefulness in serving the industry. As a result, AMS has identified that the standard may need to be revised to reflect current marketing practices. AMS is seeking comments regarding any revisions that may be necessary to better serve the industry.

DATES: Comments must be received by June 27, 2005.

ADDRESSES: Interested persons are invited to submit written comments to the Standardization Section, Fresh Products Branch, Fruit and Vegetable Programs, Agricultural Marketing Service, U.S. Department of Agriculture, 1400 Independence Ave. SW., Room 1661 South Building, Stop 0240, Washington, DC 20250–0240; Fax (202) 720–8871, e-mail *FPB.DocketClerk@usda.gov.* Comments should make reference to the dates and page number of this issue of the **Federal Register** and will be made available for public inspection in the above office during regular business hours. The United States Standards for Grades of Globe Artichokes is available either at the above address or by accessing the Fresh Products Branch Web site at: *http://www.ams.usda.gov/standards/stanfrfv.htm.*

FOR FURTHER INFORMATION CONTACT: David L. Priester, at the above address or call (202) 720–2185; e-mail *David.Priester@usda.gov.*

SUPPLEMENTARY INFORMATION: Section 203(c) of the Agricultural Marketing Act of 1946 (7 U.S.C. 1621–1627), as amended, directs and authorizes the Secretary of Agriculture ''To develop and improve standards of quality, condition, quantity, grade and packaging and recommend and demonstrate such standards in order to encourage uniformity and consistency in commercial practices.'' AMS is committed to carrying out this authority in a manner that facilitates the marketing of agricultural commodities and makes copies of official standards available upon request. The United States Standards for Grades of Fruits and Vegetables not connected with Federal Marketing Orders or U.S. Import Requirements no longer appear in the Code of Federal Regulations, but are maintained by USDA/AMS/Fruit and Vegetable Programs.

AMS is considering whether to revise the voluntary United States Standards for Grades of Globe Artichokes using procedures that appear in Part 36, Title 7 of the Code of Federal Regulations (7 CFR part 36).

Background

At a 2003 meeting with the Fruit and Vegetable Industry Advisory Committee, AMS was asked to review all the fresh fruit and vegetable grade standards for usefulness in serving the industry. As a result, AMS has identified the United States Standards for Grades of Globe Artichokes for possible revision. These standards were last revised in 1969. As a result, AMS has identified that the standard may need to be revised to reflect current marketing trends. However, prior to undertaking detailed work to develop proposed revisions to the standards, AMS is seeking comments on whether any revisions are necessary to better serve the industry and the probable impact of any revisions on distribution, processors, and growers.

This notice provides for a 60-day comment period for interested parties to comment on whether any changes are necessary to the standards. Should AMS conclude that there is a need for any revisions of the standards, the proposed revisions will be published in the **Federal Register** with a request for comments in accordance with 7 CFR part 36.

Authority: 7 U.S.C. 1621–1627.

Dated: April 21, 2005.

Kenneth C. Clayton,

Acting Administrator, Agricultural Marketing Service.

[FR Doc. 05–8304 Filed 4–25–05; 8:45 am]

BILLING CODE 3410–02–P

DEPARTMENT OF AGRICULTURE

Agricultural Marketing Service

[Docket Number FV–05–306]

United States Standards for Grades of Lemons

AGENCY: Agricultural Marketing Service, USDA.

ACTION: Notice.

SUMMARY: The Agricultural Marketing Service (AMS), prior to undertaking research and other work associated with revising official grade standards, is soliciting comments on the need for possible revisions to the United States Standards for Grades of Lemons. At a 2003 meeting with the Fruit and Vegetable Industry Advisory Committee, AMS was asked to review all the fresh fruit and vegetable grade standards for usefulness in serving the industry. As a result, AMS is seeking comments regarding any revision to the lemon grade standards that may be necessary to better serve the industry.

DATES: Comments must be received by June 27, 2005.

ADDRESSES: Interested persons are invited to submit written comments to the Standardization Section, Fresh Products Branch, Fruit and Vegetable Programs, Agricultural Marketing Service, U.S. Department of Agriculture, 1400 Independence Ave., SW., Room 1661 South Building, Stop 0240, Washington, DC 20250–0240; Fax (202) 720–8871, e-mail *FPB.DocketClerk@usda.gov.* Comments should make reference to the dates and page number of this issue of the **Federal Register** and will be made available for public inspection at the above office during regular business hours. The United States Standards for Grades of Lemons is available either at the above address or by accessing the Fresh Products Branch Web site at: *http://www.ams.usda.gov/standards/stanfrfv.htm.*

FOR FURTHER INFORMATION CONTACT: David L. Priester, at the above address or call (202) 720–2185; e-mail *David.Priester@usda.gov.*

SUPPLEMENTARY INFORMATION: Section 203(c) of the Agricultural Marketing Act of 1946 (7 U.S.C. 1621–1627), as amended, directs and authorizes the Secretary of Agriculture ''To develop and improve standards of quality, condition, quantity, grade and packaging and recommend and demonstrate such standards in order to encourage uniformity and consistency in commercial practices.'' AMS is committed to carrying out this authority in a manner that facilitates the marketing of agricultural commodities and makes copies of official standards available upon request. The United States Standards for Grades of Fruits and Vegetables not connected with Federal Marketing Orders or U.S. Import Requirements no longer appear in the Code of Federal Regulations, but are maintained by USDA/AMS/Fruit and Vegetable Programs.

AMS is considering whether to revise the U.S. Standards for Grades of Lemons using the procedures that appear in part 36, title 7 of the Code of Federal Regulations (7 CFR part 36). These standards were last revised in 1999.

Background

At a 2003 meeting with the Fruit and Vegetable Industry Advisory Committee, AMS was asked to review all the fresh fruit and vegetable grade standards for usefulness in serving the industry. AMS has identified the United States Standards for Grades of Lemons for possible revision. These standards were last revised in 1999. As a result, AMS has identified that the standard may need to be revised to reflect current marketing trends. However, prior to undertaking detailed work to develop proposed revisions to the standards, AMS is seeking comments whether any revisions are necessary to better serve the industry and the probable impact of any revisions on distributors, processors, and growers.

This notice provides for a 60-day comment period for interested parties to comment on whether any changes are necessary to the standards. Should AMS conclude that there is a need for any revisions of the standards, the proposed revisions will be published in the **Federal Register** with a request for comments in accordance with 7 CFR part 36.

Authority: 7 U.S.C. 1621–1627.

Dated: April 21, 2005.

Kenneth C. Clayton,

Acting Administrator, Agricultural Marketing Service.

[FR Doc. 05–8305 Filed 4–25–05; 8:45 am]

BILLING CODE 3410–02–P

DEPARTMENT OF AGRICULTURE

Forest Service

Lake Tahoe Basin Federal Advisory Committee

AGENCY: Forest Service, USDA.

ACTION: Notice of meeting.

SUMMARY: The Lake Tahoe Basin Federal Advisory Committee will hold a meeting on May 18, 2005, at the Tahoe Regional Planning Agency, 128 Market Street, Stateline, NV 98449. This Committee, established by the Secretary of Agriculture on December 15, 1998 (64 FR 2876), is chartered to provide advice to the Secretary on implementing the terms of the Federal Interagency Partnership on the Lake Tahoe Region and other matters raised by the Secretary.

DATES: The meeting will be held May 18, 2005, beginning at 3 p.m. and ending at 7 p.m.

ADDRESSES: The meeting will be held at the Tahoe Regional Planning Agency, 128 Market Street, Stateline, NV 89449.

FOR FURTHER INFORMATION CONTACT: Gloria Trahey, Lake Tahoe Basin Management Unit, Forest Service, 35 College Drive, South Lake Tahoe, CA 96150, (530) 543–2643.

SUPPLEMENTARY INFORMATION: The committee will meet jointly with the Lake Tahoe Basin Executives Committee. Items to be covered on the agenda include: (1) Public Hearing and (2) Review of Southern Nevada Public Land Management Act Round 6 Project Proposals. All Lake Tahoe Basin Federal Advisory Committee meetings are open to the public. Interested citizens are encouraged to attend at the above address. Issues may be brought to the attenditon of the Committee during the open public comment period at the meeting or by filing written statements with the secretary for the Committee before or after the meeting. Please refer any written comments to the Lake Tahoe Basin Management Unit at the contact address stated above.

Dated: April 19, 2005.

Tyrone Kelley,

Acting Forest Supervisor.

[FR Doc. 05–8270 Filed 4–25–05; 8:45 am]

BILLING CODE 3410–11–M

DEPARTMENT OF COMMERCE

Submission for OMB Review; Comment Request

The Department of Commerce has submitted to the Office of Management and Budget (OMB) for clearance the following proposal for collection of information under the provisions of the Paperwork Reduction Act (44 U.S.C. Chapter 35).

Agency: National Oceanic and Atmospheric Administration (NOAA).

Title: Southeast Region Vessel Identification Requirements.

Form Number(s): None.

OMB Approval Number: 0648–0358.

Type of Request: Regular submission.
Burden Hours: 6,133.
Number of Respondents: 8,043.
Average Hours Per Response: For the majority of vessels, 45 minutes. For those requiring color coding, an additional 30 minutes is needed.
Needs and Uses: The regulations at 50 CFR 622.6 and 640.6 require that all vessels with Federal permits to fish in the Southeast display the vessel's official number and, in some cases, a color code. The markings must be in a specific size on port and starboard sides of the deckhouse or hull, and a weatherdeck. The display of the identifying markings aids in fishery law enforcement.
Affected Public: Business or other for-profit organizations; individuals or households.
Frequency: Annually.
Respondent's Obligation: Mandatory.
OMB Desk Officer: David Rostker, (202) 395–3897.
Copies of the above information collection proposal can be obtained by calling or writing Diana Hynek, Departmental Paperwork Clearance Officer, (202) 482–0266, Department of Commerce, Room 6625, 14th and Constitution Avenue, NW., Washington, DC 20230 (or via the Internet at *dHynek@doc.gov*).
Written comments and recommendations for the proposed information collection should be sent within 30 days of publication of this notice to David Rostker, OMB Desk Officer, FAX number (202) 395–7285, or *David_Rostker@omb.eop.gov.*

Dated: April 21, 2005.

Gwellnar Banks,

Management Analyst, Office of the Chief Information Officer.

[FR Doc. 05–8312 Filed 4–25–05; 8:45 am]

BILLING CODE 3510–22–P

DEPARTMENT OF COMMERCE

Submission for OMB Review; Comment Request

The Department of Commerce has submitted to the Office of Management and Budget (OMB) for clearance the following proposal for collection of information under the provisions of the Paperwork Reduction Act (44 U.S.C. Chapter 35).
Agency: National Oceanic and Atmospheric Administration (NOAA).
Title: Cooperative Game Fish Tagging Report.
Form Number(s): NOAA FORM 88–162.
OMB Approval Number: 0648–0247.
Type of Request: Regular submission.
Burden Hours: 360.
Number of Respondents: 12,000.
Average Hours Per Response: 2 minutes.
Needs and Uses: The Cooperative Tagging Center, part of the National Marine Fisheries Service (NMFS), attempts to determine the migration patterns and other biological information of billfish, tunas, and swordfish. The fish tagging report card is provided to the angler with the tags, and he/she fills out the card with the information when a fish is tagged. The card is then mailed back to NMFS where the data is stored.
Affected Public: Individuals or households.
Frequency: On occasion.
Respondent's Obligation: Voluntary.
OMB Desk Officer: David Rostker, (202) 395–3897.
Copies of the above information collection proposal can be obtained by calling or writing Diana Hynek, Departmental Paperwork Clearance Officer, (202) 482–0266, Department of Commerce, Room 6625, 14th and Constitution Avenue, NW., Washington, DC 20230 (or via the Internet at *dHynek@doc.gov*).
Written comments and recommendations for the proposed information collection should be sent within 30 days of publication of this notice to David Rostker, OMB Desk Officer, FAX number (202) 395–7285, or *David_Rostker@omb.eop.gov.*

Dated: April 21, 2005.

Gwellnar Banks,

Management Analyst, Office of the Chief Information Officer.

[FR Doc. 05–8313 Filed 4–25–05; 8:45 am]

BILLING CODE 3510–22–P

DEPARTMENT OF COMMERCE

Submission for OMB Review; Comment Request

The Department of Commerce has submitted to the Office of Management and Budget (OMB) for clearance the following proposal for collection of information under the provisions of the Paperwork Reduction Act (44 U.S.C. Chapter 35).
Agency: National Oceanic and Atmospheric Administration (NOAA).
Title: Northwest Region Gear Identification Requirements.
Form Number(s): None.
OMB Approval Number: 0648–0352.
Type of Request: Regular submission.
Burden Hours: 1,782.
Number of Respondents: 548.
Average Hours Per Response: 15 minutes.
Needs and Uses: Regulations implementing the Pacific Coast Groundfish Fisheries Management Plan at 50 CFR 660.382 specify that Federally permitted vessels are required to mark their fixed gear with an identifying number. This number is used by NOAA, the U.S. Coast Guard, and other agencies for fishery enforcement activities.
Affected Public: Business or other for-profit organizations.
Frequency: Annually.
Respondent's Obligation: Mandatory.
OMB Desk Officer: David Rostker, (202) 395–3897.
Copies of the above information collection proposal can be obtained by calling or writing Diana Hynek, Departmental Paperwork Clearance Officer, (202) 482–0266, Department of Commerce, Room 6625, 14th and Constitution Avenue, NW., Washington, DC 20230 (or via the Internet at *dHynek@doc.gov*).
Written comments and recommendations for the proposed information collection should be sent within 30 days of publication of this notice to David Rostker, OMB Desk Officer, FAX number (202) 395–7285, or *David_Rostker@omb.eop.gov.*

Dated: April 21, 2005.

Gwellnar Banks,

Management Analyst, Office of the Chief Information Officer.

[FR Doc. 05–8314 Filed 4–25–05; 8:45 am]

BILLING CODE 3510–22–P

DEPARTMENT OF COMMERCE

Submission for OMB Review; Comment Request

The Department of Commerce has submitted to the Office of Management and Budget (OMB) for clearance the following proposal for collection of information under the provisions of the Paperwork Reduction Act (44 U.S.C. Chapter 35).
Agency: National Oceanic and Atmospheric Administration (NOAA).
Title: Southeast Region Gear Identification Requirements.
Form Number(s): None.
OMB Approval Number: 0648–0359.
Type of Request: Regular submission.
Burden Hours: 2,192.
Number of Respondents: 1,000.
Average Hours Per Response: 7 minutes per trap; 10 seconds per coral rock; and 20 minutes per gillnet float.
Needs and Uses: The participants in certain Federally regulated fisheries in the Southeast Region of the U.S. must mark their fishing gear with the vessel's official identification number or permit number (depending upon the fishery)

and color code. The harvesters of aquaculture live rock must mark or tag the material deposited. These requirements are needed to aid fishery enforcement activities and for purposes of gear identification of lost or damaged gear and related civil proceedings.

Affected Public: Business or other for-profit organizations; Individuals or households.

Frequency: Annually.

Respondent's Obligation: Mandatory.

OMB Desk Officer: David Rostker, (202) 395–3897.

Copies of the above information collection proposal can be obtained by calling or writing Diana Hynek, Departmental Paperwork Clearance Officer, (202) 482–0266, Department of Commerce, Room 6625, 14th and Constitution Avenue, NW., Washington, DC 20230 (or via the Internet at *dHynek@doc.gov*).

Written comments and recommendations for the proposed information collection should be sent within 30 days of publication of this notice to David Rostker, OMB Desk Officer, FAX number (202) 395–7285, or *David_Rostker@omb.eop.gov.*

Dated: April 21, 2005.

Gwellnar Banks,

Management Analyst, Office of the Chief Information Officer.

[FR Doc. 05–8315 Filed 4–25–05; 8:45 am]

BILLING CODE 3510–22–P

DEPARTMENT OF COMMERCE

Submission for OMB Review; Comment Request

The Department of Commerce has submitted to the Office of Management and Budget (OMB) for clearance the following proposal for collection of information under the provisions of the Paperwork Reduction Act (44 U.S.C. Chapter 35).

Agency: National Oceanic and Atmospheric Administration (NOAA).

Title: Survey of Intent and Capacity to Harvest and Process Fish and Shellfish (Northwest Region).

Form Number(s): None.

OMB Approval Number: 0648–0243.

Type of Request: Regular submission.

Burden Hours: 3.

Number of Respondents: 40.

Average Hours Per Response: 5 minutes.

Needs and Uses: A survey of domestic whiting processors and fishermen's associations in the Pacific Northwest is conducted to determine the tonnage of fish intended to be harvested, capacity to harvest allocations, and interest in harvesting fish that may be reapportioned from other segments of the fleet.

Affected Public: Business or other for-profit organizations; State, local or tribal government.

Frequency: Annually and variable.

Respondent's Obligation: Mandatory.

OMB Desk Officer: David Rostker, (202) 395–3897.

Copies of the above information collection proposal can be obtained by calling or writing Diana Hynek, Departmental Paperwork Clearance Officer, (202) 482–0266, Department of Commerce, Room 6625, 14th and Constitution Avenue, NW., Washington, DC 20230 (or via the Internet at *dHynek@doc.gov*).

Written comments and recommendations for the proposed information collection should be sent within 30 days of publication of this notice to David Rostker, OMB Desk Officer, FAX number (202) 395–7285, or *David_Rostker@omb.eop.gov.*

Dated: April 21, 2005.

Gwellnar Banks,

Management Analyst, Office of the Chief Information Officer.

[FR Doc. 05–8316 Filed 4–25–05; 8:45 am]

BILLING CODE 3510–22–P

DEPARTMENT OF COMMERCE

Bureau of Industry and Security

[Docket No. 050408100–5100–01]

Revision to the Unverified List—Guidance as to ''Red Flags''

AGENCY: Bureau of Industry and Security, Commerce.

ACTION: Notice.

SUMMARY: On June 14, 2002, the Bureau of Industry and Security (''BIS'') published a notice in the **Federal Register** that set forth a list of persons in foreign countries who were parties to past export transactions where pre-license checks or post-shipment verifications could not be conducted for reasons outside the control of the U.S. Government (''Unverified List''). Additionally, on July 16, 2004, BIS published a notice in the **Federal Register** that advised exporters that the Unverified List would also include persons in foreign countries in transactions where BIS is not able to verify the existence or authenticity of the end-user, intermediate consignee, ultimate consignee, or other party to the transaction. These notices advised exporters that the involvement of a listed person as a party to a proposed transaction constitutes a ''red flag'' as described in the guidance set forth in Supplement No. 3 to 15 CFR part 732, requiring heightened scrutiny by the exporter before proceeding with such a transaction. This notice adds one entity to the Unverified List. The entity is: Parrlab Technical Solutions, LTD, 1204, 12F Shanghai Industrial Building, 48–62 Hennesey Road, Wan Chai, Hong Kong Special Administrative Region.

DATES: This notice is effective April 26, 2005.

FOR FURTHER INFORMATION CONTACT: Thomas W. Andrukonis, Office of Enforcement Analysis, Bureau of Industry and Security, Telephone: (202) 482–4255.

SUPPLEMENTARY INFORMATION: In administering export controls under the Export Administration Regulations (15 CFR parts 730 to 774) (''EAR''), BIS carries out a number of preventive enforcement activities with respect to individual export transactions. Such activities are intended to assess diversion risks, identify potential violations, verify end-uses, and determine the suitability of end-users to receive U.S. commodities or technology. In carrying out these activities, BIS officials, or officials of other Federal agencies acting on BIS's behalf, selectively conduct pre-licence checks (''PLCs'') to verify the bona fides of the transaction and the suitability of the end-user or ultimate consignee. In addition, such officials sometimes carry out post-shipment verifications (''PSVs'') to ensure that U.S. exports have actually been delivered to the authorized end-user, are being used in a manner consistent with the terms of a license or license exception, and are otherwise consistent with the EAR.

In certain instances BIS officials, or other Federal officials acting on BIS's behalf, have been unable to perform a PLC or PSV with respect to certain export control transactions for reasons outside the control of the U.S. Government (including a lack of cooperation by the host government authority, the end-user, or the ultimate consignee). BIS listed a number of foreign end-users and consignees involved in such transactions in the Unverified List that was included in BIS's **Federal Register** notice of June 14, 2002. *See* 67 FR 40910. On July 16, 2004, BIS published a notice in the **Federal Register** that advised exporters that the Unverified List would also include persons in foreign countries where BIS is not able to verify the existence or authenticity of the end user, intermediate consignee, ultimate consignee, or other party to an export transaction. *See* 69 FR 42652.

The June 14, 2002, and July 16, 2004, notices advised exporters that the involvement of a listed person in a transaction constituted a ''red flag'' under the ''Know Your Customer'' guidance set forth in Supplement No. 3 to 15 CFR part 732 of the EAR. Under that guidance, whenever there is a ''red flag,'' exporters have an affirmative duty to inquire, verify, or otherwise substantiate the proposed transaction to satisfy themselves that the transaction does not involve a proliferation activity prohibited in 15 CFR part 744, and does not violate other provisions of the EAR. The **Federal Register** notices further stated that BIS may periodically add persons to the Unverified List based on the criteria set forth above, and remove persons when warranted.

This notice advises exporters that BIS is adding Parrlab Technical Solutions, LTD in the Hong Kong Special Administrative Region to the Unverified List. A ''red flag'' now exists for transactions involving this entity due to its inclusion on the Unverified List. As a result, exporters have an affirmative duty to inquire, verify, or otherwise substantiate the proposed transaction to satisfy themselves that the transaction does not involve a proliferation activity prohibited in 15 CFR part 744, and does not violate other provisions of the EAR.

The Unverified List, as modified by this notice, is set forth below.

Dated: April 15, 2005.

Wendy Wysong,

Acting Assistant Secretary for Export Enforcement.

Unverified List

(As of April 26, 2005)

The Unverified List includes names, countries, and last known addresses of foreign persons involved in export transactions with respect to which: the Bureau of Industry and Security (''BIS'') could not conduct a pre license check (''PLC'') or a post shipment verification (''PSV'') for reasons outside of the U.S. Government's control; and/or BIS was not able to verify the existence or authenticity of the end user, intermediate consignee, ultimate consignee or other party to an export transaction. Any transaction to which a listed person is a party will be deemed to raise a ''red flag'' with respect to such transaction within the meaning of the guidance set forth in Supplement No. 3 to 15 CFR part 732. The red flag applies to the person on the Unverified List regardless of where the person is located in the country included on the list.

Name	Country	Last known address
Lucktrade International	Hong Kong Special Administrative Region.	P.O. Box 91150, Tsim Sha Tsui, Hong Kong.
Brilliant Intervest	Malaysia	14–1, Persian 65C, Jalan Pahang Barat, Kuala Lumpur, 53000.
Dee Communications MSDN.BHD	Malaysia	G5/G6, Ground Floor, Jin Gereja, Johor Bahru.
Peluang Teguh	Singapore	203 Henderson Road #09–05H, Henderson Industrial Park, Singapore.
Lucktrade International PTE Ltd	Singapore	35 Tannery Road #01–07 Tannery Block, Ruby Industrial Complex, Singapore 347740.
Arrow Electronics Industries	United Arab Emirates	204 Arbift Tower, Benyas Road, Dubai.
Jetpower Industrial Ltd	Hong Kong Special Administrative Region.	Room 311, 3rd Floor, Wing On Plaza, 62 Mody Road, Tsim Sha Tsui East, Kowloon.
Onion Enterprises Ltd.	Hong Kong Special Administrative Region.	Room 311, 3rd Floor, Wing On Plaza, 62 Mody Road, Tsim Sha Tsui East, Kowloon.
Lucktrade International	Hong Kong Special Administrative Region.	Room 311, 3rd Floor, Wing On Plaza, 62 Mody Road, Tsim Sha Tsui East, Kowloon.
Litchfield Co. Ltd.	Hong Kong Special Administrative Region.	Room 311, 3rd Floor, Wing On Plaza, 62 Mody Road, Tsim Sha Tsui East, Kowloon.
Sunford Trading Ltd.	Hong Kong Special Administrative Region.	Unit 2208, 22/F, 118 Connaught Road West.
Parrlab Technical Solutions, LTD	Hong Kong Special Administrative Region.	1204, 12F Shanghai Industrial Building, 48–62 Hennesey Road, Wan Chai.

[FR Doc. 05–8332 Filed 4–25–05; 8:45 am]

BILLING CODE 3510–33–P

DEPARTMENT OF COMMERCE

Interntational Trade Administration

(A–201 830)

Carbon and Certain Alloy Steel Wire Rod: Extension of Time Limits for the Preliminary Results of Antidumping Duty Administrative Review

AGENCY: Import Administration, International Trade Administration, Department of Commerce.

FOR FURTHER INFORMATION CONTACT: Lyman Armstrong or Jolanta Lawska at (202) 482–3601 or (202) 482–5075 respectively, AD/CVD Operations, Office 3, Import Administration, International Trade Administration, U.S. Department of Commerce, 14th Street and Constitution Ave, NW, Washington, DC 20230.

SUPPLEMENTARY INFORMATION:

Background

On November 19, 2004, the U.S. Department of Commerce (''Department'') published a notice of initiation of the administrative review of the antidumping duty order on Carbon and Certain Alloy Steel Wire Rod from Mexico, covering the period from October 1, 2003 to September 30, 2004. *See Initiation of Antidumping and Countervailing Duty Administrative Reviews*, 69 FR 67701, (November 19, 2004.). The preliminary results of this review are currently due no later than July 3, 2005.

Extension of Time Limit of Preliminary Results

Section 751(a)(3)(A) of the Tariff Act of 1930, as amended (''the Act''), requires the Department to make a preliminary determination within 245 days after the last day of the anniversary month of an order or finding for which a review is requested. Section 751(a)(3)(A) of the Act further states that if it is not practicable to complete the review within the time period specified, the administering authority may extend the 245–day period to issue its preliminary results by up to 365 days.

We determine that completion of the preliminary results of this review within the 245-day period is not practicable for the following reasons. This review covers six companies, and to conduct the sales and cost analyses for each

requires the Department to gather and analyze a significant amount of information pertaining to each company's sales practices, manufacturing costs and corporate relationships. In addition, the Department is analyzing issues related to scope exclusions of certain products. Given the number and complexity of issues in this case, and in accordance with section 751(a)(3)(A) of the Act, we are extending the time period for issuing the preliminary results of review to 365 days. Therefore, the preliminary results are now due no later than October 31, 2005. The final results continued to be due 120 days after publication of the preliminary results.

This notice is issued and published in accordance with Section 751(a)(3)(A) of the Act.

Dated: April 19, 2005.

Barbara E. Tillman,

Acting Deputy Assistant Secretary for Import Administration.

[FR Doc. E5–1981 Filed 4–25–05; 8:45 am]

BILLING CODE: 3510–DS–S

DEPARTMENT OF COMMERCE

International Trade Administration

(A–823–812)

Initiation of a Changed Circumstances Review of the Antidumping Duty Order on Carbon and Certain Alloy Steel Wire Rod from Ukraine

AGENCY: Import Administration, International Trade Administration, Department of Commerce.

ACTION: Notice of initiation and request for comments.

DATES: April 26, 2005.

SUMMARY: The Department of Commerce is initiating a changed circumstances review in order to determine whether Ukraine should continue to be treated as a non–market economy country for purposes of the antidumping duty law. Written comments (original and six copies) should be sent to Joseph A. Spetrini, Acting Assistant Secretary for Import Administration, U.S. Department of Commerce, Central Records Unit, Room 1870, 14th Street and Constitution Avenue NW, Washington, DC 20230.

FOR FURTHER INFORMATION CONTACT: Lawrence Norton or Shauna Lee–Alaia, Office of Policy, Import Administration, U.S. Department of Commerce, 14th Street and Constitution Avenue, NW, Washington DC, 20230, 202–482–1579 or 202–482–2793, respectively.

SUPPLEMENTARY INFORMATION:

Background

Citing changes that have occurred in Ukraine over the past several years, on April 2, 2005 the Government of Ukraine's Ministry of Economy and European Integration requested that the Department of Commerce conduct a review of Ukraine's status as a non–market economy (''NME'') country within the context of a changed circumstances review of the antidumping duty order on carbon and certain alloy steel wire rod from Ukraine. In response to this request, the Department is initiating a changed circumstances review in order to determine whether Ukraine should continue to be treated as an NME country for purposes of the antidumping law, pursuant to sections 751(b) and 771(18)(C)(ii) of the Tariff Act of 1930, as amended (''the Act''). Specifically, the Department is resuming the review of Ukraine's NME status on which it deferred a decision in 2002. See *Antidumping Duty Investigation of Carbon and Certain Alloy Steel Wire Rod from Ukraine; Notice to defer a decision regarding Ukraine's non–market economy status*, 67 FR 51536 (August 8, 2002). The Department has treated Ukraine as an NME country in all past antidumping duty investigations and administrative reviews. See, *e.g., Final Determination of Sales at Less Than Fair Value: Carbon and Certain Alloy Steel Wire Rod from Ukraine, 67 FR 55785 (August 30, 2002); Final Determination of Sales at Less Than Fair Value: Certain Hot–Rolled Carbon Steel Flat Products from Ukraine*, 66 FR 50401 (October 3, 2001); and *Final Determination of Sales at Less Than Fair Value: Steel Concrete Reinforcing Bars from Ukraine*, 66 FR 1857 (April 11, 2001). A designation as a NME remains in effect until it is revoked by the Department. See section 771(18)(C)(i) of the Act.

Opportunity for Public Comment

As part of this inquiry to determine whether to revoke Ukraine's NME status, the Department is interested in receiving public comment with respect to Ukraine in relation to the factors listed in section 771(18)(B) of the Act, which the Department must take into account in making a market/non–market economy determination:

(i) The extent to which the currency of the foreign country is convertible into the currency of other countries;

(ii) the extent to which wage rates in the foreign country are determined by free bargaining between labor and management;

(iii) the extent to which joint ventures or other investments by firms of other foreign countries are permitted in the foreign country;

(iv) the extent of government ownership or control of the means of production;

(v) the extent of government control over allocation of resources and over price and output decisions of enterprises; and

(vi) such other factors as the administering authority considers appropriate.

Comments--Deadline, Format, and Number of Copies

The deadline for submission of comments will be 45 days after the date of publication of this notice in the **Federal Register**. Rebuttal comments may be submitted up to 30 days after the date by which initial comments are due. Each person submitting comments should include his or her name and address, and give reasons for any recommendation. To facilitate their consideration by the Department, comments should be submitted in the following format: (1) begin each comment on a separate page; (2) concisely state the issue identified and discussed in the comment and include any supporting documentation in exhibits or appendices; (3) provide a brief summary of the comment (a maximum of three sentences) and label this section ''summary of comment≥; (4) provide an index or table of contents; and (5) include the case number, A–823–812, in the top right hand corner of the submission.

Persons wishing to comment should file a signed original and six copies of each set of comments by the dates specified above. All comments responding to this notice will be a matter of public record and will be available for public inspection and copying at Import Administration's Central Records Unit, Room B–099, between the hours of 8:30 a.m. and 5 p.m. on business days. The Department requires that comments be submitted in written form. The Department recommends submission of comments in electronic media, preferably in Portable Document Format (PDF), to accompany the required paper copies. Comments filed in electronic form should be submitted on CD–ROM as comments submitted on diskettes are likely to be damaged by postal radiation treatment.

Comments received in electronic form will be made available to the public on the Internet at the Import Administration Web site at the following address: *http://ia.ita.doc.gov/.*

Any questions concerning file formatting, document conversion, access on the Internet, or other electronic filing issues should be addressed to Andrew Lee Beller, Import Administration Webmaster, at (202) 482–0866, email: *webmaster–support@ita.doc.gov.*

Hearing

After reviewing all comments and rebuttal comments, the Department will hold a public hearing on the NME country issue if one is requested in the initial or rebuttal comments on this issue by an interested party, as defined by section 771(9) of the Act, or if the Department determines that one is warranted. If the Department holds a hearing, the Department will announce a place and time for that hearing. This determination is issued and published in accordance with sections 751(b) and 771(18)(C)(ii) of the Act.

Dated: April 20, 2005.

Joseph A. Spetrini,

Acting Assistant Secretary for Import Administration.

[FR Doc. E5–1980 Filed 4–26–05; 8:45 am]

BILLING CODE: 3510–DS–S

DEPARTMENT OF COMMERCE

International Trade Administration

(A–449–804)

Steel Concrete Reinforcing Bars from Latvia: Extension of the Time Limit for the Preliminary Results of Antidumping Duty Administrative Review

AGENCY: Import Administration, International Trade Administration, Department of Commerce.

EFFECTIVE DATE: April 26, 2005.

FOR FURTHER INFORMATION CONTACT: Daniel O'Brien or Shane Subler at (202) 482–1376 or (202) 482–0189, respectively; AD/CVD Operations, Office 1, Import Administration, International Trade Administration, U.S. Department of Commerce, 14th Street and Constitution Avenue, NW, Washington, DC 20230.

SUPPLEMENTARY INFORMATION:

TIME LIMITS:

Statutory Time Limits

Section 751(a)(3)(A) of the Tariff Act of 1930, as amended (the Act), requires the Department of Commerce (the Department) to complete the preliminary results of an administrative review within 245 days after the last day of the anniversary month of an order/finding for which a review is requested, and the final results within 120 days after the date on which the preliminary results are published. However, if it is not practicable to complete the review within these time periods, section 751(a)(3)(A) of the Act allows the Department to extend the time limit for (1) the preliminary results to a maximum of 365 days after the last day of the anniversary month of an order/finding for which a review is requested, and (2) the final results to 180 days (or 300 days if the Department does not extend the time limit for the preliminary results) from the date of publication of the preliminary results.

Background

On September 27, 2004, Joint Stock Company Liepajas Metalurgs, a Latvian producer of subject merchandise, requested an administrative review of the antidumping duty order on Steel Concrete Reinforcing Bars from Latvia. On September 30, 2004, the petitioners in the proceeding, the Rebar Trade Action Coalition[1] and its individual members, also requested an administrative review of the antidumping order. On October 22, 2004, the Department published a notice of initiation of the administrative review, covering the period September 1, 2003, through August 31, 2004 (69 FR 62022). The preliminary results are currently due no later than June 2, 2005.

Extension of Time Limit for Preliminary Results of Review

We determine that it is not practicable to complete the preliminary results of this review within the original time limits. Several complex issues related to merchandise classification and cost of production have been raised during the course of this administrative review. The Department needs more time to address these items and evaluate the issues more thoroughly.

For the reasons noted above, we are extending the time limit for completion of the preliminary results until no later than August 1, 2005. We intend to issue the final results no later than 120 days after publication of the preliminary results.

This notice is issued and published in accordance with section 751(a)(3)(A) of the Act.

Dated: April 20, 2005.

Barbara E. Tillman,

Acting Deputy Assistant Secretary for Import Administration.

[FR Doc. E5–1979 Filed 4–25–05; 8:45 am]

BILLING CODE 3510–DS–S

[1] The Rebar Trade Action Coalition comprises Gerdau Ameristeel, CMC Steel Group, Nucor Corporation, and TAMCO.

DEPARTMENT OF COMMERCE

National Oceanic and Atmospheric Administration

[I.D. 042105A]

General Advisory Committee to the U.S. Section to the Inter-American Tropical Tuna Commission (IATTC); Meeting Announcement

AGENCY: National Marine Fisheries Service (NMFS), National Oceanic and Atmospheric Administration (NOAA), Commerce.

ACTION: Notice; public meeting.

SUMMARY: NMFS announces the meeting of the General Advisory Committee to the U.S. Section to the IATTC on May 12, 2005.

DATES: The open session of the General Advisory Committee meeting will be held on May 12, 2005, from 9 a.m. to 12 p.m. If necessary, a closed session will be held May 12, 2005, from 1 p.m. to 5 p.m.

ADDRESSES: The meeting will be held at NMFS, Southwest Regional Office, 501 West Ocean Blvd., Suite 3300, Long Beach, California, 90803–4213.

FOR FURTHER INFORMATION CONTACT: J. Allison Routt at (562) 980–4019.

SUPPLEMENTARY INFORMATION: In accordance with the Tuna Conventions Act, as amended, the Department of State has appointed a General Advisory Committee to the U.S. Section to the IATTC. The U.S. section consists of the four U.S. Commissioners to the IATTC and the representative of the Deputy Assistant Secretary of State for Oceans and Fisheries. The Advisory Committee supports the work of the U.S. Section in a solely advisory capacity with respect to U.S. participation in the work of the IATTC, with particular reference to the development of policies and negotiating positions pursued at meetings of the IATTC. NMFS, Southwest Region, administers the Advisory Committee in cooperation with the Department of State.

The General Advisory Committee to the U.S. Section to the IATTC will meet to receive and discuss information on: (1) the results of the June 2004 Annual Meeting of the IATTC, (2) 2004 IATTC activities, (3) recent and upcoming meetings of IATTC working groups, and (4) Advisory Committee operational issues. The public will have access to the open session of the meeting, but there will be no opportunity for public comment.

If necessary, the General Advisory Committee will convene an executive session during the afternoon of May 12,

2005, to discuss sensitive information relating to the U.S. negotiating positions on issues on the agenda for the upcoming IATTC meeting and working groups, including conservation and management measures for yellowfin and bigeye tuna for 2005 and 2006, measures to be taken in cases of non-compliance with the IATTC's conservation and management measures, management of fishing capacity, measures to address bycatch and other issues.

Special Accommodations

The meeting location is physically accessible to people with disabilities. Requests for sign language interpretation or other auxiliary aids should be directed to Allison Routt at (562) 980–4019 at least 10 days prior to the meeting date.

Dated: April 21, 2005.

Emily Menashes,

Acting Director, Office of Sustainable Fisheries, National Marine Fisheries Service.

[FR Doc. E5–1969 Filed 4–25–05; 8:45 am]

BILLING CODE 3510–22–S

COMMITTEE FOR THE IMPLEMENTATION OF TEXTILE AGREEMENTS

Adjustment of Import Limits for Certain Cotton, Wool and Man-Made Fiber Textiles and Textile Products Produced or Manufactured in the Socialist Republic of Vietnam

April 20, 2005.

AGENCY: Committee for the Implementation of Textile Agreements (CITA).

ACTION: Issuing a directive to the Commissioner, Bureau of Customs and Border Protection.

EFFECTIVE DATE: April 27, 2005.

FOR FURTHER INFORMATION CONTACT: Naomi Freeman, International Trade Specialist, Office of Textiles and Apparel, U.S. Department of Commerce, (202) 482–4212. For information on the quota status of these limits, refer to the Bureau of Customs and Border Protection website (*http://www.cbp.gov*), or call (202) 344–2650. For information on embargoes and quota re-openings, refer to the Office of Textiles and Apparel website at *http://otexa.ita.doc.gov.*

SUPPLEMENTARY INFORMATION:

Authority: Section 204 of the Agricultural Act of 1956, as amended (7 U.S.C. 1854); Executive Order 11651 of March 3, 1972, as amended.

The current limits for certain categories are being adjusted for swing and carryover.

A description of the textile and apparel categories in terms of HTS numbers is available in the CORRELATION: Textile and Apparel Categories with the Harmonized Tariff Schedule of the United States (see **Federal Register** notice 69 FR 4926, published on February 2, 2004). Information regarding the 2005 CORRELATION will be published in the **Federal Register** at a later date. Also see 69 FR 57272, published on September 24, 2004.

James C. Leonard III,

Chairman, Committee for the Implementation of Textile Agreements.

Committee for the Implementation of Textile Agreements

April 20, 2005.

Commissioner,
Bureau of Customs and Border Protection, Washington, DC 20229

Dear Commissioner: This directive amends, but does not cancel, the directive issued to you on September 20, 2004, by the Chairman, Committee for the Implementation of Textile Agreements. That directive concerns imports of certain cotton, wool and man–made fiber textiles and textile products, produced or manufactured in Vietnam and exported during the twelve-month period which began on January 1, 2005 and extends through December 31, 2005.

Effective on April 27, 2005, you are directed to adjust the limits for the following categories, as provided for under the terms of the current bilateral textile agreement between the Governments of the United States and Vietnam:

Category	Restraint limit [1]
200	241,252 kilograms.
301	694,171 kilograms.
332	279,684 dozen pairs.
333	45,750 dozen.
334/335	741,567 dozen.
338/339	15,103,366 dozen.
340/640	2,282,946 dozen.
341/641	967,847 dozen.
342/642	620,905 dozen.
345	192,014 dozen.
347/348	7,666,005 dozen.
351/651	596,799 dozen.
352/652	2,267,643 dozen.
359–C/659–C [2]	342,803 kilograms.
359-S/659-S [3]	603,432 kilograms.
434	18,708 dozen.
435	46,158 dozen.
440	2,887 dozen.
447	60,052 dozen.
448	36,955 dozen.
620	3,887,620 square meters.
632	168,140 dozen pairs.
638/639	1,375,101 dozen.
645/646	175,276 dozen.
647/648	2,230,991 dozen.

[1] The limits have not been adjusted to account for any imports exported after December 31, 2004.

[2] Category 359-C: only HTS numbers 6103.42.2025, 6103.49.8034, 6104.62.1020, 6104.69.8010, 6114.20.0048, 6114.20.0052, 6203.42.2010, 6203.42.2090, 6204.62.2010, 6211.32.0010, 6211.32.0025 and 6211.42.0010; Category 659-C: only HTS numbers 6103.23.0055, 6103.43.2020, 6103.43.2025, 6103.49.2000, 6103.49.8038, 6104.63.1020, 6104.63.1030, 6104.69.1000, 6104.69.8014, 6114.30.3044, 6114.30.3054, 6203.43.2010, 6203.43.2090, 6203.49.1010, 6203.49.1090, 6204.63.1510, 6204.69.1010, 6210.10.9010, 6211.33.0010, 6211.33.0017 and 6211.43.0010.

[3] Category 359-S: only HTS numbers 6112.39.0010, 6112.49.0010, 6211.11.8010, 6211.11.8020, 6211.12.8010 and 6211.12.8020; Category 659-S: only HTS numbers 6112.31.0010, 6112.31.0020, 6112.41.0010, 6112.41.0020, 6112.41.0030, 6112.41.0040, 6211.11.1010, 6211.11.1020, 6211.12.1010 and 6211.12.1020.

The Committee for the Implementation of Textile Agreements has determined that these actions fall within the foreign affairs exception to the rulemaking provisions of 5 U.S.C. 553(a)(1).

Sincerely,

James C. Leonard III,

Chairman, Committee for the Implementation of Textile Agreements.

[FR Doc. E5–1977 Filed 4–25–05; 8:45 am]

BILLING CODE 3510–DS–S

COMMITTEE FOR THE IMPLEMENTATION OF TEXTILE AGREEMENTS

Designations under the Textile and Apparel Commercial Availability Provisions of the United States Caribbean Basin Trade Partnership Act (CBTPA)

April 20, 2005.

AGENCY: The Committee for the Implementation of Textile Agreements (CITA)

ACTION: Designation

EFFECTIVE DATE: April 26, 2005.

SUMMARY: The Committee for the Implementation of Textile Agreements (CITA) has determined that certain woven fabric, of the specifications detailed below, classified in the indicated subheadings of the Harmonized Tariff Schedule of the United States (HTSUS), for use in boys' suits, trousers, and suit-type jackets or blazers, sizes 2T - 20, cannot be supplied by the domestic industry in commercial quantities in a timely manner. CITA hereby designates such apparel articles, that are both cut and sewn or otherwise assembled in an eligible CBTPA beneficiary country,

from this fabric as eligible for quota free and duty free treatment under the textile and apparel commercial availability provisions of the CBTPA and eligible under HTSUS subheadings 9820.11.27, to enter free of quota and duties, provided that all other fabrics are wholly formed in the United States from yarns wholly formed in the United States.

FOR FURTHER INFORMATION CONTACT: Martin J. Walsh, Office of Textiles and Apparel, U.S. Department of Commerce, (202) 482 2818.

SUPPLEMENTARY INFORMATION:

Authority: Section 211 of the CBTPA, amending Section 213(b)(2)(A)(v)(II) of the Caribbean Basin Economic Recovery Act (CBERA); Presidential Proclamation 7351 of October 2, 2000; Executive Order No. 13191 of January 17, 2001.

BACKGROUND:

The commercial availability provision of the CBTPA provides for duty-free and quota-free treatment for apparel articles that are both cut (or knit-to-shape) and sewn or otherwise assembled in one or more beneficiary CBTPA country from fabric or yarn that is not formed in the United States if it has been determined that such yarns or fabrics cannot be supplied by the domestic industry in commercial quantities in a timely manner and certain procedural requirements have been met. In Presidential Proclamation 7351, the President proclaimed that this treatment would apply to apparel articles from fabrics or yarn designated by the appropriate U.S. government authority in the **Federal Register**. In Executive Order 13191, the President authorized CITA to determine whether yarns or fabrics cannot be supplied by the domestic industry in commercial quantities in a timely manner.

On December 12, 2004, the Chairman of CITA received a petition from Sharretts, Paley, Carter & Blauvelt, P.C., on behalf of Fishman & Tobin, alleging that a certain woven fabric, of the specifications detailed below, classified in the indicated subheadings of the Harmonized Tariff Schedule of the United States (HTSUS), cannot be supplied by the domestic industry in commercial quantities in a timely manner. The petition requested that boys' suits, trousers, and suit-type jackets or blazers, sizes 2T - 20, of such fabrics assembled in one or more CBTPA beneficiary countries be eligible for preferential treatment under the CBTPA. On December 20, 2004, CITA requested public comment on the petition. See Request for Public Comment on Commercial Availability Petition under the United States - Caribbean Basin Trade Partnership Act (CBTPA) (69 FR 75933). On January 5, 2005, CITA and the U.S. Trade Representative (USTR) sought the advice of the Industry Trade Advisory Committee for Textiles and Clothing and the Industry Trade Advisory Committee for Distribution Services. On January 5, 2005, CITA and USTR offered to hold consultations with the Committee on Ways and Means of the House of Representatives and the Committee on Finance of the Senate (collectively, the Congressional Committees). On January 24, 2005, the U.S. International Trade Commission provided advice on the petitions.

Based on the information and advice received and its understanding of the industry, CITA determined that the fabric set forth in the petition cannot be supplied by the domestic industry in commercial quantities in a timely manner. On February 10, 2005, CITA and USTR submitted a report to the Congressional Committees that set forth the action proposed, the reasons for such action, and advice obtained. A period of 60 calendar days since this report was submitted has expired.

CITA hereby designates as eligible for preferential treatment under HTSUS subheading 9820.11.27, boys' suits, trousers, and suit-type jackets or blazers, sizes 2T - 20, that are both cut and sewn or otherwise assembled in one or more eligible CBTPA beneficiary countries, from a certain woven fabric, of the specifications detailed below, classified in the indicated HTSUS subheadings, not formed in the United States, provided that all other fabrics used in the referenced apparel articles are wholly formed in the United States from yarns wholly formed in the United States, subject to the special rules for findings and trimmings, certain interlinings and de minimis fibers and yarns under section 112(d) of the CBTPA, and that such articles are imported directly into the customs territory of the United States from an eligible CBTPA beneficiary country.

Specifications:

Fabric	Fancy polyester filament fabric
HTS Subheading:	5407.53.20.20 & 5407.53.20.60
Fiber Content:	100% Polyester
Width:	58/60 inches
Construction:	Plain, twill and satin weaves, in combinations of 75 denier, 100 denier, 150 denier, and 300 denier yarn sizes, with mixes of 25% cationic/75% disperse, 50% cationic/50% disperse, and 100% cationic.
Dyeing:	Containing at least three different yarns, each of which is dyed a different color

An ''eligible CBTPA beneficiary country'' means a country which the President has designated as a CBTPA beneficiary country under section 213(b)(5)(B) of the CBERA (19 U.S.C. 2703(b)(5)(B)) and which has been the subject of a finding, published in the **Federal Register**, that the country has satisfied the requirements of section 213(b)(4)(A)(ii) of the CBERA (19 U.S.C. 2703(b)(4)(A)(ii)) and resulting in the enumeration of such country in U.S. note 1 to subchapter XX of Chapter 98 of the HTSUS.

James C. Leonard III,

Chairman, Committee for the Implementation of Textile Agreements.

[FR Doc. E5–1978 Filed 4–26–05; 8:45 am]

BILLING CODE 3510–DS–S

COMMITTEE FOR THE IMPLEMENTATION OF TEXTILE AGREEMENTS

Entry of Shipments of Cotton, Wool, Man-Made Fiber, Silk Blend and Other Vegetable Fiber Textiles and Apparel in Excess of China Textile Safeguard Limits.

April 21, 2005.

AGENCY: The Committee for the Implementation of Textile Agreements (CITA).

ACTION: Issuing a Directive to Commissioner, Customs and Border Protection.

FOR FURTHER INFORMATION CONTACT: Ross Arnold, International Trade Specialist, Office of Textiles and Apparel, U.S. Department of Commerce, (202) 482-3400.

SUPPLEMENTARY INFORMATION:

Authority: Executive Order 11651 of March 3, 1972, as amended; Section 204 of the Agricultural Act of 1956, as amended (7 U.S.C. 1854).

In a notice and letter to the Commissioner, Bureau of Customs and Border Protection published in the **Federal Register** on December 13, 2004, the Committee for the Implementation of Textile Agreements (CITA) announced staged entry of overshipments of ATC quotas, China

textile safeguard quotas, and textile quotas on non-WTO countries without agreements in place for 2005. (See 69 FR 72181). That notice referred to a previous notice, published on June 25, 2004, which reminded the public that CITA has the right to permanently deny, or to stage entry of overshipments of textile quotas. (See 69 FR 35586). This notice is to inform the public that overshipments of merchandise subject to any China textile safeguard limits shall be subject to delayed and staged entry, in a manner similar to the procedure explained in the December 13, 2004 notice and letter. In the absence of bilateral agreement with the Government of the People's Republic of China establishing limits beyond the expiration date of safeguard quotas, any overshipments of those quotas shall be subject to the following procedure:

1.) Entry will not be allowed until one month after the expiration date of the safeguard quota.

2.) At that time, only 5 percent of the base limit will be allowed entry for a one month period beginning on that date.

3) An additional 5 percent will be allowed entry monthly until all overshipments are allowed entry.

A textile safeguard limit on socks from China in Categories 332/432/632part has been in place since October 29, 2004, and extends through October 28, 2005. (See 69 FR 63371). Any overshipments of this limit shall be subject to delayed and staged entry as described above, and as provided specifically in the accompanying directive to the Commissioner of U.S. Customs and Border Protection. The base limit for the socks quota for October 29, 2004–October 28, 2005 can be found on the web at *http://otexa.ita.doc.gov/* under ''Summary of Agreements.''

James C. Leonard III,

Chairman, Committee for the Implementation of Textile Agreements.

Committee for the Implementation of Textile Agreements

April 21, 2005.

Commissioner of Customs,
Department of the Treasury, Washington, DC 20229.

Dear Commissioner: This directive provides instructions on permitting entry to goods shipped in excess of the China textile safeguard limit on socks in categories 332/432/632part, which covers goods exported from China during the October 29, 2004 - October 28, 2005 period. For all shipments exported from China that exceed that limit, you are directed to deny entry until November 29, 2005, subject to the following procedure. From November 29 through December 28, 2005, you are directed to permit entry to goods in an amount equal to 5 percent of the applicable base safeguard limit. For each succeeding period, beginning on the 29th of the month, and extending through the 28th of the following month, to permit entry to goods in an amount equal to 5 percent of the applicable base safeguard limit, until all shipments in excess of the safeguard limit have been entered.

The Committee for the Implementation of Textile Agreements has determined that this action falls within the foreign affairs exception to the rulemaking provisions of 5 U.S.C. 553(a)(1).

Sincerely,
James C. Leonard III,
Chairman, Committee for the Implementation of Textile Agreements.

[FR Doc. E5–1976 Filed 4–25–05; 8:45 am]

BILLING CODE 3510–DS–S

DEPARTMENT OF DEFENSE

Department of the Air Force HQ USAF Scientific Advisory Board

AGENCY: Department of the Air Force, DoD.

ACTION: Notice of meeting.

SUMMARY: Pursuant to Public Law 92–463, notice is hereby given of the forthcoming meeting of the Air Force Scientific Advisory Board Domain Integration Study. The purpose of this meeting is to gather information pertinent to the Domain Integration Study and to caucus regarding findings and recommendations. Because classified and contractor-proprietary information will be discussed, this meeting will be closed to the public.

DATES: 10–13 May 2005.

ADDRESSES: Rosslyn, VA.

FOR FURTHER INFORMATION CONTACT: Major Kyle Gresham, Air Force Scientific Advisory Board Secretariat, 1180 Air Force Pentagon, Rm 5D982, Washington DC 20330–1180, (703) 697–4808.

Albert Bodnar,

Air Force Federal Register Liaison Officer.

[FR Doc. 05–8267 Filed 4–25–05; 8:45 am]

BILLING CODE 5001–05–P

DEPARTMENT OF DEFENSE

Department of the Army

Availability of the Final Draft Environmental Assessment for the Construction of a Building Addition To Accommodate the U.S. Army Intelligence and Security Command Information Dominance Center

AGENCY: Department of the Army, DoD.

ACTION: Notice of availability.

SUMMARY: The United States Army Intelligence and Security Command has prepared an Environmental Assessment (EA) of the potential environmental consequences of constructing a new U.S. Army Intelligence and Security Command Information Dominance Center (IDC) building addition at a previously developed site on Fort Belvoir, VA. This Environmental Assessment has been prepared pursuant to the National Environmental Policy Act (NEPA); the Council on Environmental Quality regulations implementing the NEPA; Department of Defense (DoD) Directive 6050.1; Environmental Effects in the United States of DoD Actions; and instructions implementing NEPA.

The U.S. Army Intelligence and Security Command (INSCOM) has identified a requirement to construct a building addition to accommodate its IDC. Construction and operation of the IDC facility conforms to Fort Belvoir's current Master Planning strategy. HQ INSCOM and Fort Belvoir have thoroughly reviewed the Proposed Action, Action Alternatives, a No Action Alternative to the Proposed Action, and environmental consequences associated with each. Based on this review and consideration of all relevant factors, HQ INSCOM and Fort Belvoir have determined and concluded that the Proposed Action will not have direct, indirect, or cumulatively significant impacts on the surrounding human environment. An Environmental Impact Statement, therefore, is not required and will not be prepared. HQ INSCOM and Fort Belvoir will consider public comment and concerns prior to making a final determination to proceed with the proposed action.

INSCOM evaluated six alternatives to meet requirements for an expanded IDC facility. These alternatives included: a no action alternative (status quo); renovation of existing HQ INSCOM facilities; renovation of other government facilities; lease of off-post facilities in the general vicinity of Fort Belvoir; construction of new facilities on Fort Belvoir; and construction of an addition to existing HQ INSCOM facilities on Fort Belvoir. Several possible locations were considered in this evaluation, with each alternative being evaluated for mission support and economic, environmental, and security considerations. It is anticipated that construction will begin in Fiscal Year (FY) 2008. Project completion is anticipated in FY2010.

DATES: The agency must receive comments on or before May 26, 2005.

ADDRESSES: For additional information or to submit written comments, contact Commander, USAINSCOM, 8825 Beulah Street, Building 2444, Attn: IALO–E, Fort Belvoir, VA 22060.

FOR FURTHER INFORMATION CONTACT: Ms. Susan Roeder, Environmental Protection Specialist, (703) 428–4520, e-mail: *smroede@inscom.army.mil.*

SUPPLEMENTARY INFORMATION: The intent of this project is to provide HQINSCOM with increased space that supports expanding intelligence missions and associated personnel increases, particularly for the IDC. the proposed IDC project provides a multi-story, multi-purpose, 233,000 gross square foot facility, to include all required mechanical, electrical, fire protection, redundant power and information systems. It will also include the installation of physical security and access control systems. A unique requirement of the IDC is its need for larger, open work areas which must also allow the flexibility of periodic reconfiguration. The typical, economical structural design of a 30 foot by 30 foot structural column grid is inadequate for the IDC. A minimum 30′ by 45′ grid is required. Other key components of this facility include the following: secure facility space; specialized operations space; special equipment storage; classrooms; server room; wellness room and showers; cafeteria; mechanical/utility rooms; bathrooms; training area; storage areas; library; office space; and administrative support areas. Other required support facilities to be built include walks, curbs and gutters, surface parking, site improvements, HVAC, and power generation equipment.

The IDC Environmental Assessment is available for public review at Directorate of Installation Support, Environmental and Natural Resource Division (9430 Jackson Loop, Suite 107, Fort Belvoir, VA). It is also available at the following four Fairfax County Public Library local branches: John Marshall Branch (6209 Rose Hill Drive, Alexandria, VA); Lorton Branch (9520 Richmond Hwy., Lorton, VA); Sherwood Hall Branch (2501 Sherwood Hall Lane, Alexandria, VA); and Kingstowne Branch (6500 Landsdowne Centre, Alexandria, VA). A copy of this notice and the Environmental Assessment cab be viewed on the World Wide Web at *http://www.inscom.army.mil.* Interested parties are invited to submit written comments for consideration during the 30-day public comment period which closes on the date specified in **DATES** above. The proposed action will not be implemented before this date.

Dated: April 19, 2005.

Thomas J. Boyle,

Colonel, GS, Assistant Chief of Staff, G–4.

[FR Doc. 05–8284 Filed 4–25–05; 8:45 am]

BILLING CODE 3710–08–M

DEPARTMENT OF DEFENSE

Department of the Army

Publication of Families First Business Rules

AGENCY: Department of the Army, DOD.

ACTION: Notice.

SUMMARY: The Military Surface Deployment and Distribution Command (SDDC), as the Department of Defense (DOD) Traffic Manager for the Household Goods and Personal Property Program, is announcing the publication of the Families First Business Rules for review and comment.

This announcement is being made to afford the public an opportunity to review and comment on the business rules changes before commencing Families First. The business rules will be posted to the SDDC Web site located at *http://www.sddc.army.mil*, under Families First. The site offers industry access to updates on the business rules and information on the various Phases of the program.

DATES: The business rules were released on April 21, 2005, and posted to the SDDC Web site on April 22, 2005. comments must be submitted on or before May 26, 2005.

ADDRESSES: Comments may be sent by e-mail to the following address: *http://www.sddc.army.mil/frontDoor/0,1865,OID=4--7319-13197--13197--00.html* or by courier to: Headquarters, Surface Deployment and Distribution Command, Attn: SDPP–PD, Room 10N35–29 (Judith Tarbox), Hoffman Building II, 200 Stovall Street, Alexandria, VA 22332–5000.

FOR FURTHER INFORMATION CONTACT: Ms. Judith Tarbox at (703) 428–3004 or e-mail at *TarboxJudith@sddc.army.mil.*

Regulation Flexibility Act

This action is not considered rule making within the meaning of Regulatory Flexibility Act, 5 USC 601–612.

Paperwork Reduction Act

The Paperwork Reduction Act, 44 USC 3051 *et seq.*, does not apply because no information collection or record keeping requirements are imposed on contractors, offerors or member of the public.

Thomas G. Keller,

Col, USAF, DCS, Passenger and Personal Property.

[FR Doc. 05–8282 Filed 4–25–05; 8:45 am]

BILLING CODE 3710–08–M

DEPARTMENT OF DEFENSE

Department of the Army; Corps of Engineers

Intent To Prepare a Draft Supplemental Environmental Impact Statement for the Brevard County (Mid-Reach) Shore Protection Project Located in Brevard County, FL

AGENCY: Department of the Army, U.S. Army Corps of Engineers, DoD.

ACTION: Notice of intent.

SUMMARY: The U.S. Army Corps of Engineers, Jacksonville District, intends to prepare a Draft Supplemental Environmental Impact Statement (DSEIS) for the Brevard County (Mid-Reach) Shore Protection Feasibility Study. The study will focus on 7.6 miles of developed shoreline, also referred to as the ''Mid-Reach'', from the south end of Patrick Air Force Base to just north of Indialantic. Ongoing erosion problems are endangering the shoreline infrastructure within the study area. In cooperation with Brevard County, the study will evaluate alternative solutions that will maximize shore protection while minimizing environmental impacts.

ADDRESSES: U.S. Army Corps of Engineers, Planning Division, Environmental Branch, P.O. Box 4970, Jacksonville, FL 32232–0019.

FOR FURTHER INFORMATION CONTACT: Mr. Paul E. Stodola, by e-mail *Paul.E.Stodola@saj02.usace.army.mil* or by telephone at (904) 232–3271.

SUPPLEMENTARY INFORMATION: a. *Proposed Action.* The Brevard County, FL, (Mid-Reach) Shore Protection Feasibility Study was authorized by Section 418 of the Water Resources and Development act of 2000 (Pub. L. 106–541). The entire 7.6-mile length of the Mid-Reach shoreline has been critically eroded with 62% of its oceanfront development anticipated to be lost to storm damage during the next 50 years. Placement of beach quality sand from various sources along the Mid-Reach will be evaluated with the intent of providing the greatest opportunity of shoreline protection. Environmental considerations will be addressed in a DSEIS, which will supplement the

Environmental Impact Statement prepared for the Brevard County Shore Protection Project in 1996. Subsequently a final SEIS will be published.

b. *Alternatives.* Specific proposed alternatives at this time include hydraulic beach fill along the entire length or portions of the Mid-Reach, truck-haul beach fill along the entire length or portions of the Mid-Reach, dune fill, and no-action.

c. *Scoping Process.* the scoping process as outlined by the Council on Environmental Quality would be utilized to involve Federal, State, and local agencies, affected Indian tribes, and other interested persons and organizations. A scoping letter dated April 1, 2005, was sent to the appropriate parties requesting their comments and concerns. Any persons and organizations wishing to participate in the scoping process should contact the U.S. Army Corps of Engineers at the above address.

Significant issues to be analyzed in the DSEIS would include effects on Federally listed threatened and endangered species, Essential Fish Habitat with particular concern for nearshore coquina reefs and worm rock. Other issues would be health and safety, water quality, aesthetics and recreation, fish and wildlife resources, cultural resources, socio-economic resources, and any issues identified through scoping and public involvement.

The proposed action would be coordinated with the U.S. Fish and Wildlife Service and the National Marine Fisheries Service (NMFS) pursuant to Seciton 7 of the Endangered Species Act, with the NMFS concerning Essential Fish Habitat, and with the State Historic Preservation Officer.

The proposed action would also involve evaluation for compliance with guidelines pursuant to Section 404(b) of the Clean Water Act; application (to the State of Florida) for Water Quality Certification pursuant to Section 401 of the Clean Water Act; certification of state lands, easements, and rights of way; and determination of Coastal Zone Management Act consistency.

The U.S. Army Corps of Engineers and the Non-Federal sponsor, Brevard County, would provide extensive information and assistance on the resources to be impacted and alternatives.

d. *Scoping Meetings.* Public scoping meetings would be held. Exact dates, times, and locations would be published in local papers.

e. *Draft Supplemental Environmental Impact Statement Availability.* The Draft Supplemental Environmental Impact Statement would be available on or about April 2006.

Dated: April 13, 2005.

Dennis W. Barnett,

Acting Chief, Planning Division.

[FR Doc. 05–8283 Filed 4–25–05; 8:45 am]

BILLING CODE 3710–AJ–M

DEPARTMENT OF DEFENSE

Department of the Navy

Notice of Availability of Government-Owned Inventions; Available for Licensing

AGENCY: Department of the Navy, DOD.

ACTION: Notice.

SUMMARY: The inventions listed below are assigned to the United States Government, as represented by the Secretary of the Navy and are available for licensing by the Department of the Navy.

U.S. Patent No. 6,873,886 entitled ''Modular Mission Payload Control Software'' and U.S. Patent No. 6,876,321 entitled ''Pulse Descriptor Word Collector.''

ADDRESSES: Requests for copies of the inventions cited should be directed to the Naval Surface Warfare Center, Crane Div., Code 054, Bldg 1, 300 HWY 361, Crane, IN 47522–5001 and must include the patent number.

FOR FURTHER INFORMATION CONTACT: Mr. Brian Bailey, Naval Surface Warfare Center, Crane Div., Code 054, Bldg 1, 300 HWY 361, Crane, IN 47522–5001, telephone (812) 854–1865. An application for license may be downloaded from: *http://www.crane.navy.mil/newscommunity/techtrans_CranePatents.asp.*

(Authority: 35 U.S.C. 207, 37 CFR part 404.)

Dated: April 19, 2005.

I.C. Le Moyne Jr.,

Lieutenant, Judge Advocate General's Corps, U.S. Navy, Alternate Federal Register Liaison Officer.

[FR Doc. 05–8269 Filed 4–25–05; 8:45 am]

BILLING CODE 3810–FF–P

DEPARTMENT OF DEFENSE

Department of the Navy

Notice of Availability of Government-Owned Invention; Available for Licensing

AGENCY: Department of the Navy, DOD.

ACTION: Notice.

SUMMARY: The invention listed below is assigned to the United States Government as represented by the Secretary of the Navy and is available for licensing by the Department of the Navy. U.S. Patent Application No. 10/081,901: Production of Hollow Metal Microcylinders from Lipids, Navy Case No. 83,603.

ADDRESSES: Requests for copies of the invention cited should be directed to the Naval Research Laboratory, Code 1004, 4555 Overlook Avenue, SW., Washington, DC 20375–5320, and must include the Navy Case number.

FOR FURTHER INFORMATION CONTACT: Jane F. Kuhl, Technology Transfer Office, NRL Code 1004, 4555 Overlook Avenue, SW., Washington, DC 20375–5320, telephone 202–767–7230. Due to temporary U.S. Postal Service delays, please fax 202–404–7920, e-mail: *kuhl@utopia.nrl.navy.mil* or use courier delivery to expedite response.

(Authority: 35 U.S.C. 207, 37 CFR Part 404.)

Dated: April 19, 2005.

I.C. Le Moyne Jr.,

Lieutenant, Judge Advocate General's Corps, U.S. Navy, Alternate Federal Register Liaison Officer.

[FR Doc. 05–8273 Filed 4–22–05; 8:45 am]

BILLING CODE 3810–FF–P

DEPARTMENT OF DEFENSE

Department of the Navy

Notice of Availability of Government-Owned Inventions; Available for Licensing

AGENCY: Department of the Navy, DOD.

ACTION: Notice.

SUMMARY: The inventions listed below are assigned to the United States Government as represented by the Secretary of the Navy and are available for domestic and foreign licensing by the Department of the Navy.

The following patents are available for licensing:

U.S. Patent No. 6,759,661: MINIATURE HIGH INTENSITY LED ILLUMINATION SOURCE.//U.S. Patent No. 6,766,992: MOUNTING BRACKET FOR ATTACHMENT TO FLAT OR CYLINDRICAL SURFACES. Patent No. 6,767,261: THREE-DIMENSIONAL VORTEX WAKE CANCELLING JET PROPULSION METHOD.//U.S. Patent No. 6,772,704: METHOD FOR QUANTIFYING DESIGN PARAMETERS FOR A SHIP ROLL STIMULATION SYSTEM.//U.S. Patent No. 6,779,475: LAUNCH AND RECOVERY SYSTEM FOR UNMANNED UNDERWATER VEHICLES.//U.S. Patent No. 6,779,569: LIQUID FILLING CONTROL METHOD FOR MULTIPLE TANKS.//U.S. Patent

No. 6,781,380: ACTIVE MAGNETIC ANOMALY SENSING ARRAY AND PROCESSING SYSTEM.//U.S. Patent No. 6,796,307: MULTIPLE PERSON HIGH ALTITUDE RECYCLING BREATHING APPARATUS.//U.S. Patent No. 6,802,236: SYSTEM FOR IN-STRIDE IDENTIFICATION OF MINELIKE CONTACTS FOR SURFACE COUNTERMEASURES.//U.S. Patent No. 6,802,237: SYSTEM AND METHOD FOR NEUTRALIZATION OF MINES USING ROBOTICS AND PENETRATING RODS.//U.S. Patent No. 6,802,260: SAFETY AND ARMING DEVICE USING CELLULOSE-BASED SENSOR/ACTUATOR.//U.S. Patent No. 6,802,370: PERSONAL COOLING SYSTEM FOR SHIPBOARD FIREFIGHTERS.//U.S. Patent No. 6,811,112: ACTIVE FEEDBACK LEVELWINDING SYSTEM.//U.S. Patent No. 6,837,240: DISPLAY SYSTEM UPGRADE FOR A FULL FACE MASK./ /U.S. Patent No. 6,841,994: MAGNETIC ANOMALY SENSING SYSTEM FOR DETECTION, LOCALIZATION AND CLASSIFICATION OF MAGNETIC OBJECTS.//U.S. Patent No. 6,850,152: NON-FLAMMABLE LAND AND SEA MARKER.//U.S. Patent No. 6,851,381: AIRBORNE MINE NEUTRALIZATION SYSTEM, NEUTRALIZER PRESSURE RELIEF VALVE.//U.S. Patent No. 6,853,875: SYSTEM FOR THE COMBINED HANDLING, DELIVERY AND/OR PROTECTION OF MULTIPLE STANDARDIZED CONTAINERS AND THEIR CONROLLABLE PAYLOADS.// U.S. Patent No. 6,854,410: UNDERWATER INVESTIGATION SYSTEM USING MULTIPLE UNMANNED VEHICLES.// U.S. Patent No. 6,854,412: UNDERWATER VACUUM ATTACHMENT DEVICE.//

ADDRESSES: Requests for copies of the patents cited should be directed to Office of Counsel, Naval Surface Warfare Center Panama City, 110 Vernon Ave, Panama City, FL 32407–7001.

FOR FURTHER INFORMATION CONTACT: Mr. James Shepherd, Patent Counsel, Naval Surface Warfare Center Panama City, 110 Vernon Ave, Panama City, FL 32407–7001, telephone 850–234–4646.

(Authority: 35 U.S.C. 207, 37 CFR Part 404.)

Dated: April 19, 2005.

I.C. Le Moyne Jr.,

Lieutenant, Judge Advocate General's Corps, U.S. Navy, Alternate Federal Register Liaison Officer.

[FR Doc. 05–8274 Filed 4–25–05; 8:45 am]

BILLING CODE 3810–FF–P

DEPARTMENT OF DEFENSE

Department of the Navy

Meeting of the Chief of Naval Operations (CNO) Executive Panel

AGENCY: Department of the Navy, DOD.

ACTION: Notice of closed meeting.

SUMMARY: The CNO Executive Panel is to report the findings and recommendations of the Future Force Study Group to the Chief of Naval Operations. The meeting will consist of discussions on the Navy's future fleet and network architectures.

DATES: The meeting will be held on Friday, May 20, 2005, from 9:30 a.m. to 10:30 a.m.

ADDRESSES: The meeting will be held at the Chief of Naval Operations Office, Room 4E540, 2000 Navy Pentagon, Washington, DC 20350.

FOR FURTHER INFORMATION CONTACT: Lieutenant Commander Chris Corgnati, CNO Executive Panel, 4825 Mark Center Drive, Alexandria, VA 22311, 703–681–4909.

SUPPLEMENTARY INFORMATION: Pursuant to the provisions of the Federal Advisory Committee Act (5 U.S.C. App. 2), these matters constitute classified information that is specifically authorized by Executive Order to be kept secret in the interest of national defense and are, in fact, properly classified pursuant to such Executive Order.

Accordingly, the Secretary of the Navy has determined in writing that the public interest requires that all sessions of the meeting be closed to the public because they will be concerned with matters listed in section 552b(c)(1) of title 5, United States Code.

Dated: April 19, 2005.

I.C. Le Moyne Jr.,

Lieutenant, Judge Advocate General's Corps, U.S. Navy, Alternate Federal Register Liaison Officer.

[FR Doc. 05–8268 Filed 4–25–05; 8:45 am]

BILLING CODE 3810–FF–P

DEPARTMENT OF EDUCATION

Submission for OMB Review; Comment Request

AGENCY: Department of Education.

SUMMARY: The Leader, Information Management Case Services Team, Regulatory Information Management Services, Office of the Chief Information Officer invites comments on the submission for OMB review as required by the Paperwork Reduction Act of 1995.

DATES: Interested persons are invited to submit comments on or before May 26, 2005.

ADDRESSES: Written comments should be addressed to the Office of Information and Regulatory Affairs, Attention: Carolyn Lovett, Desk Officer, Department of Education, Office of Management and Budget, 725 17th Street, NW., Room 10235, New Executive Office Building, Washington, DC 20503 or faxed to (202) 395–6974.

SUPPLEMENTARY INFORMATION: Section 3506 of the Paperwork Reduction Act of 1995 (44 U.S.C. Chapter 35) requires that the Office of Management and Budget (OMB) provide interested Federal agencies and the public an early opportunity to comment on information collection requests. OMB may amend or waive the requirement for public consultation to the extent that public participation in the approval process would defeat the purpose of the information collection, violate State or Federal law, or substantially interfere with any agency's ability to perform its statutory obligations. The Leader, Information Management Case Services Team, Regulatory Information Management Services, Office of the Chief Information Officer, publishes that notice containing proposed information collection requests prior to submission of these requests to OMB. Each proposed information collection, grouped by office, contains the following: (1) Type of review requested, *e.g.* new, revision, extension, existing or reinstatement; (2) title; (3) summary of the collection; (4) description of the need for, and proposed use of, the information; (5) respondents and frequency of collection; and (6) reporting and/or recordkeeping burden. OMB invites public comment.

Dated: April 20, 2005.

Angela C. Arrington,

Leader, Information Management Case Services Team, Regulatory Information Management Services, Office of the Chief Information Officer.

Institute of Education Sciences

Type of Review: New.

Title: The Professional Development Impact Study—Full Study Data Collection Instruments.

Frequency: On Occasion.

Affected Public: Not-for-profit institutions.

Reporting and Recordkeeping Hour Burden:

Responses: 1,682.

Burden Hours: 791.

Abstract: The current OMB package requests clearance for the instruments to be used in the full Professional

Development Impact Study. The Professional Development Impact study is a national demonstration project designed to test innovative models of professional development for reading instruction in the second grade. The data collection instruments will measure the background characteristics of the sample, fidelity of the intervention's implementation, and outcomes of the intervention.

Requests for copies of the submission for OMB review; comment request may be accessed from *http://edicsweb.ed.gov,* by selecting the ''Browse Pending Collections'' link and by clicking on link number 2686. When you access the information collection, click on ''Download Attachments ''to view. Written requests for information should be addressed to U.S. Department of Education, 400 Maryland Avenue, SW., Potomac Center, 9th Floor, Washington, DC 20202–4700. Requests may also be electronically mailed to the Internet address *OCIO_RIMG@ed.gov* or faxed to 202–245–6621. Please specify the complete title of the information collection when making your request.

Comments regarding burden and/or the collection activity requirements should be directed to Bennie Jessup at her e-mail address *Bennie.Jessup@ed.gov.* Individuals who use a telecommunications device for the deaf (TDD) may call the Federal Information Relay Service (FIRS) at 1–800–877–8339.

[FR Doc. 05–8300 Filed 4–25–05; 8:45 am]

BILLING CODE 4000–01–P

DEPARTMENT OF EDUCATION

Notice of Proposed Information Collection Requests

AGENCY: Department of Education.

ACTION: Notice of proposed information collection requests.

SUMMARY: The Leader, Information Management Case Services Team, Regulatory Information Management Services, Office of the Chief Information Officer, invites comments on the proposed information collection requests as required by the Paperwork Reduction Act of 1995.

DATES: An emergency review has been requested in accordance with the Act (44 U.S.C. Chapter 3507 (j)), since public harm is reasonably likely to result if normal clearance procedures are followed. Approval by the Office of Management and Budget (OMB) has been requested by May 15, 2005.

ADDRESSES: Written comments regarding the emergency review should be addressed to the Office of Information and Regulatory Affairs, Attention: Carolyn Lovett, Desk Officer, Department of Education, Office of Management and Budget; 725 17th Street, NW., Room 10222, New Executive Office Building, Washington, DC 20503 or faxed to (202) 395–6974.

SUPPLEMENTARY INFORMATION: Section 3506 of the Paperwork Reduction Act of 1995 (44 U.S.C. Chapter 35) requires that the Director of OMB provide interested Federal agencies and the public an early opportunity to comment on information collection requests. The Office of Management and Budget (OMB) may amend or waive the requirement for public consultation to the extent that public participation in the approval process would defeat the purpose of the information collection, violate State or Federal law, or substantially interfere with any agency's ability to perform its statutory obligations. The Leader, Information Management Case Services Team, Regulatory Information Management Services, Office of the Chief Information Officer, publishes this notice containing proposed information collection requests at the beginning of the Departmental review of the information collection. Each proposed information collection, grouped by office, contains the following: (1) Type of review requested, *e.g.*, new, revision, extension, existing or reinstatement; (2) title; (3) summary of the collection; (4) description of the need for, and proposed use of, the information; (5) respondents and frequency of collection; and (6) reporting and/or recordkeeping burden. ED invites public comment.

The Department of Education is especially interested in public comment addressing the following issues: (1) Is this collection necessary to the proper functions of the Department; (2) will this information be processed and used in a timely manner, (3) is the estimate of burden accurate; (4) how might the Department enhance the quality, utility, and clarity of the information to be collected, and (5) how might the Department minimize the burden of this collection on respondents, including through the use of information technology.

Dated: April 20, 2005.

Angela C. Arrington,

Leader, Information Management Case Services Team, Regulatory Information Management Services, Office of the Chief Information Officer.

Office of Special Education and Rehabilitative Services

Type of Review: New.

Title: Survey of Grantees in Projects with Industry, Migrant & Seasonal Farmworkers Voc Rehab & American Indians Voc Rehab Svc Programs Concerning Their Capacity to Implement the Common Measures.

Abstract: This Survey will assess the ability of grantees in the Project With Industry Program, Migrant and Seasonal Farmworkers Vocational Rehabilitation Program, and American Indian Vocational Rehabilitation Service to implement the Common Measures.

Additional Information: The purpose of this survey is to collect information that will inform Rehabilitation Services Administration's (RSA's) decisions about strategies for implementing the job training Common Measures, as required by the President's Management Agenda and OMB Director's Memorandum M–02–06.

Frequency: One-time.

Affected Public: Not-for-profit institutions; Businesses or other for-profit; State, local, or tribal gov't, SEAs or LEAs.

Reporting and Recordkeeping Hour Burden:

Responses: 178.

Burden Hours: 178.

Requests for copies of the proposed information collection request may be accessed from *http://edicsweb.ed.gov,* by selecting the ''Browse Pending Collections'' link and by clicking on link number 2723. When you access the information collection, click on ''Download Attachments'' to view. Written requests for information should be addressed to U.S. Department of Education, 400 Maryland Avenue, SW., Potomac Center, 9th Floor, Washington, DC 20202–4700. Requests may also be electronically mailed to the Internet address *OCIO_RIMG@ed.gov* or faxed to 202–245–6621. Please specify the complete title of the information collection when making your request.

Comments regarding burden and/or the collection activity requirements, contact Sheila Carey at her e-mail address *Sheila.Carey@ed.gov.* Individuals who use a telecommunications device for the deaf (TDD) may call the Federal Information

Relay Service (FIRS) at 1–800–877–8339.

[FR Doc. 05–8301 Filed 4–25–05; 8:45 am]

BILLING CODE 4000–01–P

DEPARTMENT OF ENERGY

Environmental Management Site-Specific Advisory Board, Idaho National Engineering and Environmental Laboratory

AGENCY: Department of Energy.

ACTION: Notice of open meeting.

SUMMARY: This notice announces a meeting of the Environmental Management Site-Specific Advisory Board (EMSSAB), Idaho National Engineering and Environmental Laboratory. The Federal Advisory Committee Act (Pub. L. No. 92–463, 86 Stat. 770) requires that public notice of this meeting be announced in the **Federal Register**.

DATES: Tuesday, May 17, 2005, 8 a.m.–6 p.m.; Wednesday, May 18, 2005, 8 a.m.–5 p.m.

Opportunities for public participation will be held Tuesday, May 17, from 12:15 to 12:30 p.m. and 5:45 to 6 p.m.; and on Wednesday, May 18, from 11:45 a.m. to 12 noon and 4 to 4:15 p.m. Additional time may be made available for public comment during the presentations.

These times are subject to change as the meeting progresses, depending on the extent of comment offered. Please check with the meeting facilitator to confirm these times.

ADDRESSES: Hampton Inn and Suites at the Idaho Center, 5750 East Franklin Road, Nampa, ID 83687.

FOR FURTHER INFORMATION CONTACT: Shannon A. Brennan, Federal Coordinator, Department of Energy, NE–ID Idaho Operations Office, 1955 Fremont Avenue, MS–1216, Idaho Falls, ID 83401. Phone (208) 526–3993; Fax (208) 526–1926 or e-mail: *Shannon.Brennan@nuclear.energy.gov* or visit the Board's Internet home page at: *http://www.ida.net/users/cab.*

SUPPLEMENTARY INFORMATION:

Purpose of the Board: The purpose of the Board is to make recommendations to DOE in the areas of environmental restoration, waste management, and related activities.

Tentative Topics (Agenda topics may change up to the day of the meeting; please contact Shannon A. Brennan for the most current agenda or visit the Board's Internet site at *http://www.ida.net/users/cab/):*

- Receive presentations on the potential impacts of Idaho National Laboratory missions on the environment and on the cleanup program.
- Receive presentations related to the award of the new contract for the Idaho Cleanup Program.
- Develop recommendations addressing the approach to cleanup and closure of the Subsurface Disposal Area and the Idaho Nuclear Technology Engineering Center.

Public Participation: The meeting is open to the public. Written statements may be filed with the Board either before or after the meeting. Individuals who wish to make oral presentations pertaining to agenda items should contact Shannon A. Brennan at the address or telephone number listed above. The request must be received five days prior to the meeting and reasonable provision will be made to include the presentation in the agenda. The Deputy Designated Federal Officer is empowered to conduct the meeting in a fashion that will facilitate the orderly conduct of business. Individuals wishing to make public comment will be provided equal time to present their comments.

Minutes: The minutes of this meeting will be available for public review and copying at the Department of Energy's Freedom of Information Public Reading Room, 1E–190, Forrestal Building, 1000 Independence Avenue, SW., Washington, DC 20585 between 9 a.m. and 4 p.m., Monday through Friday, except Federal holidays. Minutes will also be available by writing to Shannon A. Brennan, Federal Coordinator, at the address and phone number listed above.

Issued at Washington, DC, on April 20, 2005.

Rachel Samuel,

Deputy Advisory Committee Management Officer.

[FR Doc. 05–8290 Filed 4–25–05; 8:45 am]

BILLING CODE 6450–01–P

DEPARTMENT OF ENERGY

Environmental Management Site-Specific Advisory Board, Oak Ridge Reservation

AGENCY: Department of Energy.

ACTION: Notice of open meeting.

SUMMARY: This notice announces a meeting of the Environmental Management Site-Specific Advisory Board (EMSSAB), Oak Ridge Reservation. The Federal Advisory Committee Act (Pub. L. 92–463, 86 Stat. 770) requires that public notice of this meeting be announced in the **Federal Register**.

DATES: Wednesday, May 11, 2005, 6 p.m.

ADDRESSES: DOE Information Center, 475 Oak Ridge Turnpike, Oak Ridge, Tennessee.

FOR FURTHER INFORMATION CONTACT: Pat Halsey, Federal Coordinator, Department of Energy Oak Ridge Operations Office, P.O. Box 2001, EM–90, Oak Ridge, TN 37831. Phone (865) 576–4025; Fax (865) 576–5333 or e-mail: *halseypj@oro.doe.gov* or check the Web site at *http://www.oakridge.doe.gov/em/ssab*.

SUPPLEMENTARY INFORMATION:

Purpose of the Board: The purpose of the Board is to make recommendations to DOE in the areas of environmental restoration, waste management, and related activities.

Tentative Agenda: Stewardship Education Resource Kit.

Public Participation: The meeting is open to the public. Written statements may be filed with the Board either before or after the meeting. Individuals who wish to make oral statements pertaining to the agenda item should contact Pat Halsey at the address or telephone number listed above. Requests must be received five days prior to the meeting and reasonable provision will be made to include the presentation in the agenda. The Deputy Designated Federal Officer is empowered to conduct the meeting in a fashion that will facilitate the orderly conduct of business. Individuals wishing to make public comment will be provided a maximum of five minutes to present their comments.

Minutes: Minutes of this meeting will be available for public review and copying at the Department of Energy's Information Center at 475 Oak Ridge Turnpike, Oak Ridge, TN between 8 a.m. and 5 p.m., Monday through Friday, or by writing to Pat Halsey, Department of Energy Oak Ridge Operations Office, P.O. Box 2001, EM–90, Oak Ridge, TN 37831, or by calling her at (865) 576–4025.

Issued at Washington, DC, on April 20, 2005.

Rachel M. Samuel,

Deputy Advisory Committee Management Officer.

[FR Doc. 05–8291 Filed 4–25–05; 8:45 am]

BILLING CODE 6450–01–P

DEPARTMENT OF ENERGY

Energy Information Administration

Policy Statement—New Energy Information Administration Policy for the Unscheduled Release of Revisions to the Weekly Natural Gas Storage Report

AGENCY: Energy Information Administration (EIA), Department of Energy (DOE).

ACTION: Policy statement; new Energy Information Administration policy for the unscheduled release of revisions to the *Weekly Natural Gas Storage Report*.

SUMMARY: The EIA has a new policy regarding the unscheduled release of revisions to weekly estimates of working gas volumes held in underground storage facilities at the national and regional levels disseminated in EIA's *Weekly Natural Gas Storage Report* (WNGSR). Under the new policy, the unscheduled release of revisions shall be disseminated in a special release of the WNGSR when the effect of reported changes is at least 10 billion cubic feet (Bcf) at either a regional or national level. The unscheduled release of revisions shall be disseminated on a Federal workday between 2 and 2:10 p.m. (Eastern Time) following public notification between 1 and 1:10 p.m. of the same day. Public notification will include, at a minimum, the following: A notice on EIA's Web site, e-mails to selected media, and a general e-mail notice sent to users of WNGSR data who have signed onto a free service available on EIA's Web site. The unscheduled release of revisions for this policy does not include revised estimates resulting from changes in the survey methodology or estimation parameters, which are scheduled and announced in advance; or revised estimates resulting from reclassifications of natural gas between working gas and base gas by natural gas storage companies, which are incorporated into the estimates during the next regularly scheduled WNGSR release.

DATES: This policy becomes effective with the WNGSR released on May 19, 2005, containing data as of May 13, 2005.

ADDRESSES: Requests for additional information or questions about this policy should be directed to William Trapmann. Mr. Trapmann may be contacted by telephone (202–586–6408), FAX (202–586–4220), or e-mail (*William.Trapmann@eia.doe.gov*). These methods are recommended to expedite contact. His mailing address is Energy Information Administration, EI–44, Forrestal Building, U.S. Department of Energy, Washington, DC 20585.

FOR FURTHER INFORMATION CONTACT: The WNGSR is available on EIA's Internet site at *http://tonto.eia.doe.gov/oog/info/ngs/ngs.html*. The survey Form EIA–912 and instructions used to collect information for the WNGSR are available at *http://www.eia.doe.gov/oil_gas/natural_gas/survey_forms/nat_survey_forms.html*. The WNGSR release schedule is available at *http://tonto.eia.doe.gov/oog/info/ngs/schedule.html*.

SUPPLEMENTARY INFORMATION:

I. Background
II. Discussion of Comments
III. Current Actions

I. Background

The Federal Energy Administration Act of 1974 (Pub. L. 93–275, 15 U.S.C. 761 *et seq.*) and the DOE Organization Act (Pub. L. 95–91, 42 U.S.C. 7101 *et seq.*) require the EIA to carry out a centralized, comprehensive, and unified energy information program. This program collects, evaluates, assembles, analyzes, and disseminates information on energy resource reserves, production, demand, technology, and related economic and statistical information. This information is used to assess the adequacy of energy resources to meet near and longer term domestic demands.

The *Weekly Natural Gas Storage Report* (WNGSR) has been issued by EIA since May 9, 2002, providing weekly estimates of working gas volumes held in underground storage facilities at the national and regional levels. WNGSR users include policymakers, commodity market analysts, and industry experts. EIA uses the data to prepare analytical products assessing storage operations and the impact on supplies available, and to analyze relationships between demand, heating-degree-days, and inventory levels.

The WNGSR is based on information collected on Form EIA–912, ''Weekly Underground Natural Gas Storage Report.'' Form EIA–912 respondents provide estimates for working gas in storage as of 9 a.m. Friday each week. The deadline for submitting reports to the EIA is 5 p.m. (Eastern Time) the following Monday, except when Monday is a Federal holiday. In that case, the submission deadline is 5 p.m. on Tuesday. The WNGSR is released on Thursday between 10:30 and 10:40 a.m. (Eastern Time) on EIA's Web site (*http://tonto.eia.doe.gov/oog/info/ngs/ngs.html*), except when Thursday is a Federal holiday. A listing of changes to this general schedule is maintained on the EIA Web site at *http://tonto.eia.doe.gov/oog/info/ngs/schedule.html*.

The EIA provides the public and other Federal agencies with opportunities to comment on collections of energy information conducted by EIA. As appropriate, EIA also requests comments on important issues relevant to EIA's dissemination of energy information. Comments received help the EIA when preparing information collections and information products necessary to EIA's mission.

On January 7, 2005, EIA issued a **Federal Register** notice (70 FR 1426–28) requesting public comments on proposed changes to the current policy for handling revisions to information disseminated in the WNGSR. In that notice, EIA discussed the reasons for WNGSR revisions as well as three potential proposed policy options for the unscheduled release of revisions: (1) The existing policy of No Unscheduled Release, in which the revised information is disseminated in the next scheduled WNGSR; (2) Fixed Timing, in which revisions of sufficient magnitude are released at a fixed time and day prior to the next regularly scheduled release of the WNGSR; and (3) Variable Timing, in which revisions of sufficient magnitude may be disseminated 2 hours after EIA issues notification.

II. Discussion of Comments

In response to the **Federal Register** notice requesting comments on the proposed WNGSR revision policy, EIA received 26 sets of comments. Most of the comments were from energy firms and trade groups.

The comments tended to focus on the following general issues for which EIA specifically requested a response:

- Whether EIA should release revisions to the *Weekly Natural Gas Storage Report* outside the regular established weekly schedule, and if so, whether that should occur on a fixed or variable schedule.
- The magnitude of the threshold that may trigger an unscheduled release of revisions.
- The timing and pre-notification guidelines for the unscheduled release of revisions, including the length of time between notification and subsequent data release.
- If prior notification is used, whether a notification approach using a posting on the EIA Web site and e-mail is sufficient.
- Whether the hours for an unscheduled release should be limited to Federal work hours or the operating hours of selected energy trading markets.

As to whether EIA should conduct the unscheduled release of revisions to the *Weekly Natural Gas Storage Report,* two respondents indicated that EIA should continue the existing policy of issuing revisions only on the official schedule, while twenty-one indicated a preference that revisions be made available prior to the next scheduled release, and the three remaining respondents did not express a preference. The respondents who preferred no change in the current policy felt that it was adequate. Most of the respondents who were in favor of changing the current policy to permit unscheduled releases outside the regular weekly cycle argued that providing the market with the revised data more promptly would ensure that the storage data being used by market participants were as accurate and timely as possible.

With regard to the appropriateness of the suggested threshold of 15 Bcf to trigger an unscheduled release of revisions, responses varied considerably. Fifteen respondents expressed a preference for thresholds ranging up to 15 Bcf. Of those fifteen, two respondents favored thresholds below 7 Bcf, six favored a 7 Bcf threshold, one suggested a range of 7 to 10 Bcf, three favored 10 Bcf, and three favored a 15 Bcf threshold. Another respondent suggested the threshold should be a percentage of current working gas stocks, although a percentage was not specified. The remaining ten respondents did not provide an opinion regarding a threshold that would trigger an unscheduled release.

On the timing and pre-notification of the unscheduled release of revisions, three respondents indicated that EIA should not provide early notification, fourteen indicated that pre-notification 2 hours in advance was appropriate, one respondent suggested an overnight delay, and the remaining eight respondents did not state a preference. Respondents opposed to a delay between the pre-notification and the unscheduled release of a revision expressed a preference to have the information as soon as possible. Respondents in favor of pre-notification asserted that the early notice would give market participants time to prepare for the new information and help ensure that they would receive the information simultaneously. With respect to how to issue a pre-notification of an impending unscheduled release, all twelve respondents expressing a preference indicated that some combination of an e-mail notice and Web site posting would be sufficient, with one respondent suggesting a press release also.

In reference to the potential hours during which the unscheduled release of revisions may occur, seven respondents indicated that such releases should occur anytime, five expressed a preference for major energy market hours, and three suggested that Federal government work hours would be appropriate. Eleven respondents did not express an opinion on this issue. Respondents indicating a preference for a broader release horizon argued that the information should be made available as soon as possible. However, it was not clear whether these respondents literally meant anytime or implicitly preferred Federal work hours. Those preferring unscheduled releases during the business hours of the major energy markets indicated that a release during that period would be more equitable for all market participants.

EIA's Response to Comments Received

The comments on the issue of a policy for the unscheduled release of WNGSR revisions generally focused on the benefit of the public having the most accurate data as soon it can be made available as well as reducing uncertainty for market participants. While the benefits of providing the unscheduled release of revisions are not empirically measurable, commenters generally agreed that more flexibility in releasing this information will be an improvement to EIA's current policy of no unscheduled release of revisions, despite the likely resulting costs of monitoring EIA for the possibility of an unscheduled release.

There are a number of factors that were considered in developing a more flexible unscheduled release policy. First, EIA's goal is to provide all market participants fair opportunity to access new information at the same time to avoid bestowing an unfair advantage on a subset of market participants. The unscheduled release of revisions makes ensuring fairness to all market participants problematic because market participants may not learn of a revision at the same time. While many respondents asserted that a variable release policy would reduce market uncertainty, the possibility of an unscheduled release occurring at any time during the day could increase market uncertainty more often than not, as rumors about revisions may occur more frequently than revisions themselves. A revision policy in which revisions may occur on any Federal workday at a specified fixed time balances the public's desire for up-to-date, accurate information with managing the uncertainty and disruption that may be associated with on-going updates.

EIA is establishing a policy with a time for the unscheduled release of revisions between 2 and 2:10 p.m. on a Federal workday in order to reduce uncertainty in the market and the cost of monitoring EIA's Internet site continually for revision announcements. Further, the only time that EIA will issue a notification of an upcoming release of revisions will be between 1 p.m. and 1:10 p.m. during a Federal workday.

An approximate 1 hour delay between notification and release of a revision will provide market participants adequate opportunity to prepare for the new data and will not unduly delay the release of the information to the public. The announcement of a pending release will occur in multiple ways including through a Web site announcement, e-mails to selected media, and a general e-mail notice sent to users of WNGSR data who have signed onto a free service available on EIA's Web site. Users should note that timely delivery of the notification through e-mail depends on a number of factors, including their Internet service providers and Internet traffic, and in some cases a notification may not be received before the release of the revised WNGSR. However, reliance on multiple forms of communication will work to minimize difficulties in informing the public.

The new policy reflects EIA's concerns regarding its ability to execute the unscheduled releases effectively. While considering implementation plans for a more flexible policy, EIA determined that market participants with automated Web browser programs (also called ''robots'') may continually monitor EIA's Web site for an announcement. The system congestion caused by users in short episodes, such as occurs each Thursday at 10:30 a.m. for the scheduled release of the WNGSR, has been noticeable to EIA Web site managers, but has not caused significant problems to date. If EIA had a policy of releasing an unscheduled WNGSR revision at any time during the day, users might impose a similar load on EIA's system on a continual basis. The sustained high level of activity on EIA's Web site could overwhelm the system and seriously degrade system performance and responsiveness for all users. This could prevent EIA from successfully executing a release and even jeopardize EIA's overall Internet operations. By limiting customer interest to brief periods around 1–1:10 p.m. for notification, and 2–2:10 p.m. for release of an unscheduled release,

the threat to EIA's Internet capabilities is reduced.

This approach to timing of the announcement of an impending unscheduled release of a WNGSR revision will allow for revisions to be released as early as the same day the need for a revision is identified including situations in which the need for a revision is identified shortly after the WNGSR is released. It achieves this result in a manner that should not create unnecessary costs for users with limited resources and helps to avoid potential difficulties that might jeopardize the operational integrity of EIA's Internet site.

Lastly, each new announcement that EIA makes about the natural gas storage data seems to have a significant influence on market trading. Announcement of a pending unscheduled release likely will be accompanied by price volatility or a virtual suspension of trading, either of which constitutes a disruption of normal trading. As a result, it seems prudent for EIA to adopt a threshold for an unscheduled release of a revision higher than the current 7 Bcf threshold for a regularly scheduled revision to the WNGSR. EIA selected a threshold of 10 Bcf. Using this threshold, EIA would have had one unscheduled release of a WNGSR revision between January 1, 2003, and March 31, 2005.

This new policy will become effective with the WNGSR released on May 19, 2005, containing data as of May 13, 2005. This date was chosen to ensure adequate time for developing and testing unscheduled release procedures, testing revised report formats, and working with WNGSR customers on the new formats. A test site for the modified report formats (which will be redesigned to accommodate revision markers) will be provided in early May. Information about the test site and changes will be provided on the WNGSR Web site in the first week of May.

III. Current Actions

EIA is establishing a new policy for the unscheduled release of revisions to certain information disseminated in the WNGSR. In establishing this new policy, EIA recognizes the importance of timeliness in providing revised storage estimates. After considering all factors, EIA decided to establish a policy allowing for the unscheduled release of WNGSR revisions on any Federal workday at a set time between 2 and 2:10 p.m. after public notification between 1 and 1:10 p.m. This timetable would allow for a same-day correction to a morning WNGSR release in the event that a significant error in the data submitted by respondents or in EIA's processing of that data is discovered shortly after it is issued.

This new policy will not apply to scheduled releases such as changes in methodology or estimation parameters, which are scheduled and announced in advance. It also will not apply to revised estimates resulting from respondents reclassifying gas already in underground storage facilities (between working gas and base gas inventories). Revisions based on reclassifications of gas will only be reported in the next regularly-scheduled release of the WNGSR. The timing of a reclassification is often discretionary for the respondent. Even when it is not (*e.g.*, it becomes final on the basis of regulatory agency action), the respondent has unique knowledge related to a potential revision. In order to limit the possible disruption to markets caused by the reclassification of previous working gas inventories, reclassifications will be included in the estimate for the next regularly scheduled WNGSR release, no matter when they are officially accounted for by the respondent. Reclassifications exceeding a 7 Bcf threshold will be noted in the WNGSR text, although as adjustments to the current week data, they are not actually revisions. As a result, reclassifications would not lead to mid-week revisions which would be known in advance by only one respondent. All revisions that continue to be disseminated in regularly-scheduled releases of the WNGSR will be handled according to the revision policy established in a prior notice published in the **Federal Register** on November 12, 2002 (67 FR 68581–68583). That policy also appears in the WNGSR Methodology documentation available at *http://tonto.eia.doe.gov/oog/info/ngs/methodology.html#revisions.*

EIA WNGSR Policy for Unscheduled Release of Revisions

The unscheduled release of revisions to weekly estimates of working gas held in underground storage caused by data changes or corrections when the cumulative effect of these changes is at least 10 Bcf shall be disseminated on a Federal workday between 2 p.m. and 2:10 p.m. (Eastern Time) following notice of the pending release to the public between 1 p.m. and 1:10 p.m. (Eastern Time). If a revision is made, changes to all affected regions shall be recorded in the 2–2:10 p.m. release. Public notification will occur in a number of ways including a Web site notice of the impending release of revised data that will replace the current *Weekly Natural Gas Storage Report* (WNGSR), e-mail notification to selected media, and an e-mail notice that will be sent to all users of WNGSR data who have signed onto a free distribution service. There are two exceptions to the release of revised WNGSR data on an unscheduled basis. First, this unscheduled release policy will not apply to data changes resulting from changes in the methodology or estimation parameters. Second, revised estimates due to respondents reclassifying gas (between working gas and base gas inventories) will be reported only in regularly-scheduled releases of the WNGSR.

EIA reserves the right to revisit or amend this policy at any time at the discretion of the Administrator. However, EIA will provide prior notification in the *Weekly Natural Gas Storage Report* or the **Federal Register** before implementing any changes.

Statutory Authority: Section 52 of the Federal Energy Administration Act (Pub. L. 93–275, 15 U.S.C. 790a).

Issued in Washington, DC, April 20, 2005.

Guy F. Caruso,

Administrator, Energy Information Administration.

[FR Doc. 05–8298 Filed 4–25–05; 8:45 am]

BILLING CODE 6450–01–P

ENVIRONMENTAL PROTECTION AGENCY

[OECA–2005–0014; FRL–7903–6]

Agency Information Collection Activities: Proposed Collection; Comment Request; State Review Framework; EPA ICR Number 2185.01

AGENCY: Environmental Protection Agency (EPA).

ACTION: Notice.

SUMMARY: In compliance with the Paperwork Reduction Act (44 U.S.C. 3501 *et seq.*), this document announces that EPA is planning to submit a proposed Information Collection Request (ICR) to the Office of Management and Budget (OMB). This is a request for a new collection. Before submitting the ICR to OMB for review and approval, EPA is soliciting comments on specific aspects of the proposed information collection as described below.

DATES: Comments must be submitted on or before June 27, 2005.

ADDRESSES: Submit your comments, referencing docket ID number OECA–2005–0014 to EPA online using EDOCKET (our preferred method), by e-mail to *docket.oeca@epa.gov*, or by mail

to: EPA Docket Center, Environmental Protection Agency, OECA Docket, mail code 2201T, 1200 Pennsylvania Ave., NW., Washington, DC 20460.

FOR FURTHER INFORMATION CONTACT: Arthur Horowitz, Office of Planning Policy Analysis and Communication, mail code 2201A, Environmental Protection Agency, 1200 Pennsylvania Ave., NW., Washington, DC 20460; telephone number: (202) 564–2612; fax number: (202) 564–0027; e-mail address: *horowitz.arthur@epa.gov.*

SUPPLEMENTARY INFORMATION: EPA has established a public docket for this ICR under Docket ID number OECA–2005–0014, which is available for public viewing at the OECA Docket in the EPA Docket Center (EPA/DC), EPA West, Room B102, 1301 Constitution Ave., NW., Washington, DC. The EPA Docket Center Public Reading Room is open from 8:30 a.m. to 4:30 p.m., Monday through Friday, excluding legal holidays. The telephone number for the Reading Room is (202) 566–1744, and the telephone number for the OECA Docket is (202) 566–1514. An electronic version of the public docket is available through EPA Dockets (EDOCKET) at *http://www.epa.gov/edocket.* Use EDOCKET to obtain a copy of the draft collection of information, submit or view public comments, access the index listing of the contents of the public docket, and to access those documents in the public docket that are available electronically. Once in the system, select ''search,'' then key in the docket ID number identified above.

Any comments related to this ICR should be submitted to EPA within 60 days of this notice. EPA's policy is that public comments, whether submitted electronically or in paper, will be made available for public viewing in EDOCKET as EPA receives them and without change, unless the comment contains copyrighted material, CBI, or other information whose public disclosure is restricted by statute. When EPA identifies a comment containing copyrighted material, EPA will provide a reference to that material in the version of the comment that is placed in EDOCKET. The entire printed comment, including the copyrighted material, will be available in the public docket. Although identified as an item in the official docket, information claimed as CBI, or whose disclosure is otherwise restricted by statute, is not included in the official public docket, and will not be available for public viewing in EDOCKET. For further information about the electronic docket, see EPA's **Federal Register** notice describing the electronic docket at 67 FR 38102 (May 31, 2002), or go to *http://www.epa.gov./edocket.*

Affected entities: State and local governments.

Title: State Review Framework.

Abstract: The State Review Framework (''Framework'') is an oversight tool designed to assess state performance in enforcement and compliance assurance. The Framework's goal is to evaluate state performance by examining existing data to provide a consistent level of oversight and develop a uniform mechanism by which EPA Regions, working collaboratively with their states, can ensure that state environmental agencies are consistently implementing the national compliance and enforcement program in order to meet agreed-upon goals. Furthermore, the Framework is designed to foster dialogue on enforcement and compliance performance between the states that will enhance relationships and increase feedback, which will in turn lead to consistent program management and improved environmental results.

Specifically, the Framework is a structured process that provides critical information on a state's (or Region's, for states with EPA-implemented programs) core enforcement and compliance assurance performance by employing existing data available in EPA's existing national databases and presented in management reports for each state. By the end of calendar year 2005 EPA expects to automate the management reports and make them available to the Regions and states. No new data collection is required for the national databases. Additional data will be obtained from the review of a state environmental agency's compliance and enforcement files. No new data is required in these files; however, they will be reviewed to ensure proper and adequate documentation.

The Framework process asks regions, states and local governments to examine the existing data described above in three core programs: Clean Air Act (''CAA''), Stationary Sources; Clean Water Act (''CWA''), National Pollutant Discharge Elimination System (''NPDES''); and Resource Conservation and Recovery Act (''RCRA''), Subtitle C. The Framework process looks at thirteen (13) elements. The EPA evaluates the twelve (12) primary elements, and a thirteenth optional element, using data and file review metrics that require no new reporting burden. The utility of the Framework's metrics and the Implementation Guide are a direct result of the collaboration between states, Regions, Headquarters, and environmental leaders over the previous two years. These stakeholders provided extensive input and comments prior to the pilot phase of the project, which helped to shape the Framework. OECA is currently conducting an evaluation of pilot implementation, which includes additional comments from the pilot states. The results of the evaluation of the Framework's pilot program will be used to improve the Framework and further ensure that it is narrowly crafted and will only collect information that satisfies the Agency's needs.

The thirteen (13) elements mentioned above are: (1) The degree to which a state program has completed the universe of planned inspections (addressing core requirements and Federal, state, and regional priorities); (2) The degree to which inspection reports and compliance reviews document inspection findings, including accurate descriptions of what was observed to sufficiently identify violation(s); (3) The degree to which inspection reports are completed in a timely manner, including timely identification of violations; (4) The degree to which significant violations (*e.g.*, significant noncompliance and high-priority violations) and supporting information are accurately identified and reported to EPA's national databases in a timely manner; (5) The degree to which state enforcement actions include required corrective or complying actions (*i.e.*, injunctive relief) that will return facilities to compliance in a specific time frame; (6) The degree to which a state takes timely and appropriate enforcement actions, in accordance with policy relating to specific media; (7) The degree to which a state includes both gravity and economic benefit calculations for all penalties, appropriately using the BEN model or similar state model (where in use and consistent with national policy); (8) The degree to which penalties in final enforcement actions collect appropriate economic benefit and gravity in accordance with applicable penalty procedures; (9) The degree to which enforcement commitments in the PPA/PPG/categorical grants (*i.e.*, written agreements to deliver a product/project at a specified time), if they exist, are met and any products or projects are completed; (10) The degree to which the minimum data requirements are timely; (11) The degree to which the minimum date requirements are accurate; (12) The degree to which the minimum data requirements are complete, unless otherwise negotiated by the region and state are prescribed by a national

initiative; and (13) (Optional) other program activities (*e.g.*, using outcome data, compliance assistance, coordination with State Attorneys General). In the interest of accuracy and efficiency, the Framework also includes a five-step protocol for managing the process: (1) Pre-review; (2) offsite review; (3) onsite review; (4) drafting of the report; and (5) composing the final report and follow-up. After reviewing the level of performance based on the metrics developed under the 12 required performance elements, and the thirteenth optional element, EPA will determine if a state or Region meets minimum performance levels.

An agency may not conduct or sponsor, and a person is not required to respond to, a collection of information unless it displays a currently valid OMB control number. The OMB control numbers for EPA's regulations in 40 CFR are listed in 40 CFR part 9.

The EPA would like to solicit comments to:

(i) Evaluate the accuracy of the Agency's estimate of the burden of the proposed collection of information, including the validity of the methodology and assumptions used;

(ii) Enhance the quality, utility, and clarity of the information to be collected; and

(iii) Minimize the burden of the collection of information on those who are to respond, including through the use of appropriate automated electronic, mechanical, or other technological collection techniques or other forms of information technology, *e.g.*, permitting electronic submission of responses.

Burden Statement: The estimated burden for this Framework is 286.73 hours per respondent. The total number of respondents is 46, producing an approximate total burden of 13,189.58 hours. For each respondent, the proposed frequency of response is one time in a three-year cycle. The projected cost burden to respondents is $437,113.62, which includes a total capital and start-up component of $0.0, annualized over its expected useful life, and a total operation and maintenance component of $0.0. Burden means the total time, effort, or financial resources expended by persons to generate, maintain, retain, or disclose or provide information to or for a Federal agency. This includes the time needed to review instructions; develop, acquire, install, and utilize technology and systems for the purposes of collecting, validating, and verifying information, processing and maintaining information, and disclosing and providing information; adjust the existing ways to comply with any previously applicable instructions and requirements; train personnel to be able to respond to a collection of information; search data sources; complete and review the collection of information; and transmit or otherwise disclose the information.

Dated: April 19, 2005.

Michael Stahl,

Office Director, Office of Compliance, Office of Enforcement and Compliance Assurance.

[FR Doc. 05–8320 Filed 4–25–05; 8:45 am]

BILLING CODE 6560–50–P

ENVIRONMENTAL PROTECTION AGENCY

[FRL–7901–8]

Proposed Penalty Order Issued Under the Clean Water Act and Safe Drinking Water Act; Notice of Intent To Provide Internet Notice

AGENCY: Environmental Protection Agency (EPA).

ACTION: Notice.

SUMMARY: Notice is hereby given that the Environmental Protection Agency (EPA), Region 5, will issue notices of proposed penalty orders issued under the Clean Water Act and the Safe Drinking Water Act via the Internet.

DATES: U.S. EPA Region 5 will commence use of Internet notice on May 26, 2005.

ADDRESSES: The address of the Internet notice site is: *http://www.epa.gov/region5/publicnotices.*

FOR FURTHER INFORMATION CONTACT: Richard R. Wagner, Senior Attorney Office of Regional Counsel, U.S. Environmental Protection Agency, Region 5, 77 West Jackson Boulevard, Chicago, Illinois 60604, or telephone him at (312) 886–7947.

SUPPLEMENTARY INFORMATION: By statute the Administrator of EPA is required to provide notice of many of its actions, and his officers and staff commonly do so through notification in newspapers of general circulation. However, given the current state of technology, Internet notice may provide a more effective and efficient means to provide such notice. The benefits of such notice include the speed with which such notices can be delivered as well as the relatively low cost to the public treasury of providing such notices. In addition, in practice, newspaper notices may not always reach the broadest audience. This is for two reasons. First, newspaper notices are nearly always published on one day only, irrespective of the length of any associated comment period. Secondly, in an attempt to provide notice to those most likely to be affected by an action, notice is often published in local newspapers. However, these newspapers often have very finite distribution areas, and, as a consequence, interested individuals outside those distribution areas may have difficulty in obtaining the notices. Internet notice would provide more robust review of its proposed actions by allowing the notice to remain available to the public during the entirety of the comment period, and by providing access to a far greater audience than is possible under current practices. Benefits to the public include the relative ease of access, and low cost of access resulting from the opportunity to access a larger number of notices, in one place, for a longer period of time. We recognize that not all members of the public may have ready access to the Internet, however due to the considerations listed above, as well as the general availability of the Internet through schools, work and libraries, we believe that Internet notice will likely reach a larger audience than has the past practice of publishing a notice in a newspaper. Nonetheless, in particular instances where we believe additional notice may be helpful, we may supplement the Internet notice with newspaper notice, press release or other forms of communication.

Under the authority of the Administrator, Region 5 intends to commence Internet notice only for a subset of notices relating to proposed penalty orders issued under Sections 309(g) and 311(b)(6) of the Clean Water Act, 33 U.S.C 1319(g) and 33 U.S.C 1321(b)(6), respectively, as well as Section 1423(c)(3) of the Safe Drinking Water Act, 42 U.S.C. 300h–2(c)(3)(B). Under these provisions, the Administrator is authorized to assess civil penalties for violations of the Clean Water Act and the Safe Drinking Water Act, after providing the alleged violator notice of the proposed penalty and an opportunity for a hearing. Notice of the proposed penalty, and opportunity to provide comment must also be provided to interested members of the public. The Administrator by rule at 40 CFR Part 22 provides that notice to the public may be made ''by a method reasonably calculated to provide notice.* * *'' 40 CFR 22.45(b)(2). Given the wide use of the Internet among the public and the relatively greater accessibility provided by the Internet when compared to traditional means of notice, Region 5 believes that Internet notice of these orders meets the regulatory requirements of 40 CFR 22.45(b)(2).

The Region notes that public notice of certain proposed permitting actions under the National Pollutant Discharge

Elimination System has been provided through the Internet for several years. The Region intends to continue this practice, as well as to explore options for expanding use of Internet notice to other types of Agency actions. If EPA Region 5 decides to commence use of the Internet to provide notice of additional classes of Agency actions, notice of that decision will be provided first in the **Federal Register**.

Norman Niedergang,

Acting Regional Administrator, Region V.

[FR Doc. 05–8319 Filed 4–25–05; 8:45 am]

BILLING CODE 6560–50–P

FEDERAL COMMUNICATIONS COMMISSION

Sunshine Act Meeting; Open Commission Meeting, Thursday, April 28, 2005

April 21, 2005.

The Federal Communications Commission will hold an Open Meeting on the subjects listed below on Thursday, April 28, 2005, which is scheduled to commence at in Room TW–C305, at 445 12th Street, SW., Washington, DC.

Item No.	Bureau	Subject
1	International	*Title:* Mandatory Electronic Filing for International Telecommunications Services and Other International Filings (IB Docket No. 04–426). *Summary:* The Commission will consider a Report and Order concerning the Mandatory Electronic Filing for International Telecommunications Services.
2	Media	*Title:* Implementation of Section 210 of the Satellite Home Viewer Extension and Reauthorization Act of 2004 to Amend Section 338 of the Communications Act. *Summary:* The Commission will consider a Notice of Proposed Rulemaking that initiates a proceeding to implement new satellite broadcast carriage requirements in the non-contiguous states.
3	Wireline Competition	*Title:* Implementation of the Telecommunications Act of 1996; Telecommunications Carriers' Use of Customer Proprietary Network Information and Other Customer Information (CC Docket No. 96–115); Implementation of the Local Competition Provisions of the Telecommunications Act of 1996 (CC Docket No. 96–98); and Provision of Directory Listing Information under the Communications Act of 1934, as Amended (CC Docket No. 99–273). *Summary:* The Commission will consider an Order addressing petitions for clarification and/or reconsideration of the Subscriber List Information (SLI)/Directory Assistance (DA) First Report and Order, and SLI/DA Order on Reconsideration and Notice.
4	Office of Engineering and Technology	*Title:* Technical Standards for Determining Eligibility for Satellite-Delivered Network Signals Pursuant to the Satellite Home Viewer Extension and Reauthorization Act. *Summary:* The Commission will consider a Notice of Inquiry regarding standards that allow viewers that are unserved by a digital television broadcast station to receive network programming via satellite.

The meeting site is fully accessible to people using wheelchairs or other mobility aids. Sign language interpreters, open captioning, and assistive listening devices will be provided on site. Request other reasonable accommodations for people with disabilities as early as possible. Last minute requests will be accepted, but may be impossible to fill. Send an e-mail to *fcc504@fcc.gov* or call the Consumer & Governmental Affairs Bureau at (202) 418–0530 (voice), (202) 418–0432 (tty).

Additional information concerning this meeting may be obtained from Audrey Spivack or David Fiske, Office of Media Relations, (202) 418–0500; TTY 1–888–835–5322. Audio/Video coverage of the meeting will be broadcast live with open captioning over the Internet from the FCC's Audio/Video Events Web page at *http://www.fcc.gov/realaudio.*

For a fee this meeting can be viewed live over George Mason University's Capitol Connection. The Capitol Connection also will carry the meeting live via the Internet. To purchase these services call (703) 993–3100 or go to *http://www.capitolconnection.gmu.edu.*

Copies of materials adopted at this meeting can be purchased from the FCC's duplicating contractor, Best Copy and Printing, Inc. (202) 488–5300; Fax (202) 488–5563; TTY (202) 488–5562. These copies are available in paper format and alternative media, including large print/type; digital disk; and audio and video tape. Best Copy and Printing, Inc. may be reached by e-mail at *fcc@bcpiweb.com.*

Federal Communications Commission.

Marlene H. Dortch,

Secretary.

[FR Doc. 05–8407 Filed 4–22–05; 1:20 pm]

BILLING CODE 6712–01–P

FEDERAL HOUSING FINANCE BOARD

[No. 2005–N–02]

Proposed Collection; Comment Request

AGENCY: Federal Housing Finance Board.

ACTION: Notice.

SUMMARY: In accordance with the requirements of the Paperwork Reduction Act of 1995, the Federal Housing Finance Board (Finance Board) is seeking public comments concerning proposed changes to the information collection entitled ''Affordable Housing Program (AHP),'' which has been assigned control 3069–0006 by the Office of Management and Budget (OMB). The Finance Board intends to submit the entire AHP information collection, with the proposed changes described in this Notice, to OMB for review and approval of a three-year extension of the control number, which is due to expire on July 31, 2007.

DATES: Interested persons may submit comments on or before June 27, 2005.

COMMENTS: Submit comments by any of the following methods:

E-mail: comments@fhfb.gov.

Fax: 202–408–2580.

Mail/Hand Delivery: Federal Housing Finance Board, 1777 F Street NW., Washington, DC 20006, ATTENTION: Public Comments.

Federal eRulemaking Portal: http://www.regulations.gov. Follow the instructions for submitting comments. If you submit your comment to the Federal eRulemaking Portal, please also send it by e-mail to the Finance Board at *comments@fhfb.gov* to ensure timely receipt by the agency.

Include the following information in the subject line of your submission: Federal Housing Finance Board. Proposed Collection; Comment Request: Affordable Housing Program (AHP). 2005–N–02.

We will post all public comments we receive on this notice without change, including any personal information you provide, such as your name and address, on the Finance Board website at *http://www.fhfb.gov/pressroom/pressroom_regs.htm.*

FOR FURTHER INFORMATION CONTACT: Charles E. McLean, Associate Director, Community Investment and Affordable Housing Division, Office of Supervision, *mcleanc@fhfb.gov,* 202–408–2537, or Deattra D. Perkins, Community Development Specialist, Community Investment and Affordable Housing Division, Office of Supervision, *perkinsd@fhfb.gov,* 202–408–2527. You also can contact staff by facsimile at 202–408–2850 or regular mail to the Federal Housing Finance Board, 1777 F Street NW., Washington, DC 20006.

SUPPLEMENTARY INFORMATION:

A. Background

Section 10(j) of the Federal Home Loan Bank Act (Bank Act) requires the Finance Board to promulgate regulations under which each of the 12 Federal Home Loan Banks (Banks) must establish an Affordable Housing Program (AHP) to make subsidized advances to members engaged in lending for long term, low- and moderate-income, owner-occupied and affordable rental housing at subsidized interest rates. *See* 12 U.S.C. 1430(j). Section 10(j) also establishes the standards and requirements for making subsidized AHP advances to Bank members. Part 951 of the Finance Board regulations implements the statutory requirements and authorizes the Banks to make AHP funding decisions. *See* 12 CFR part 951.

Under the AHP, each Bank contributes at least 10 percent of its previous year's net earnings to subsidize the cost of affordable owner-occupied and rental housing targeted to individuals and families with incomes at or below 80 percent of the area median income. The Banks make the majority of the AHP subsidy available through a competitive program that requires members to submit applications on behalf of one or more sponsors of eligible housing projects. In 2004, the competitive program contributed $3.4 billion toward the construction of 31,000 housing units. Since its inception in 1990, the competitive program has contributed $35 billion toward the construction of 380,000 housing units.

The rest of the AHP subsidy is awarded through non-competitive homeownership set-aside programs under which each Bank annually can set aside an amount up to the greater of $3 million or 25 percent of its AHP funds to assist low- and moderate-income households purchase homes. A Bank also may contribute up to the greater of $1.5 million or 10 percent of its AHP funds each year to fund an additional set-aside program to assist low- and moderate-income households that also are first-time homebuyers. Members obtain AHP set-aside funds from their Bank and give the funds as grants to eligible households. A household can use a set-aside grant for down-payment or closing cost assistance or counseling costs in connection with the purchase or rehabilitation of owner-occupied units. Each Bank sets its own maximum grant amount, which may not exceed $15,000 per household. In 2004, the Banks awarded $39 million in grants to 8,121 households under set-aside programs, making an average grant of $4,916. Since the inception of the set-aside program in 1995, the Banks have awarded $213 million in grants to 47,813 households.

B. Need for and Use of the Information Collection

The Finance Board currently requires the Banks to collect 183 data elements related to the AHP. The Banks use this data to determine whether an AHP applicant satisfies the statutory and regulatory requirements to receive subsidized advances or direct subsidies under the AHP. The Finance Board uses the information to ensure that Bank funding decisions, and the use of the funds awarded, are consistent with statutory and regulatory requirements.

In February 2005, the Finance Board proposed moving many of its data requirements, including the AHP data, into a Data Reporting Manual (DRM) that will represent an investigatory order enforceable through the Finance Board's statutory powers. 70 FR 9551 (Feb. 28, 2005). After the DRM is approved in final form, the Finance Board expects that the AHP information collection will move from part 951 to the DRM.

C. Proposed Changes to the Information Collection

In September 2004, Finance Board staff informally solicited input from the 12 Banks on proposed changes to AHP Data reporting and has taken their responses (nine from individual Banks and one from the Banks' Chief Investment Officers on behalf of all Banks) into account in the proposed changes it is seeking comment upon in this Notice.

The first proposed change would update the underlying AHP database application, which currently collects data from the Banks using a web-based system that is technologically obsolete. The new AHP database application will capture uniform and accurate data that can be easily queried and analyzed. Data submission from the Banks to the Finance Board will be in formatted files that can be created by a Bank in the manner it considers most efficient or convenient. In changing the manner in which it collects data, the Finance Board does not intend to require the Banks to modify or adopt new electronic information management systems. Therefore, the proposed changes to the database application should not result in significant electronic system upgrade costs to the Banks.

The second proposed change would reduce the number of AHP data elements, deleting 88 and adding 13, and change the reporting format for some data elements. The Finance Board currently collects 183 AHP data elements, most of which relate to competitive program projects. The Finance Board proposes eliminating 88 competitive program data elements, such as ongoing entry of project modification changes.

The Finance Board proposes adding 13 new data elements, including geo-coded information in competitive and set-aside program applications that is necessary to monitor the distribution of AHP awards and the national impact of the program. Respondents can obtain geo-coded information by entering the project/property address into the Federal Financial Institutions Examination Council (FFIEC) geo-coding Web site at *http://www.ffiec.gov/geocode/default.htm* or through use of specific software.

Other new elements include the amount of first and second mortgages and interest rate(s) (stated as an annual percentage rate) for a set-aside grant recipient's mortgage, and whether the mortgage is subject to the Home Ownership and Equity Protection Act (HOEPA).[1] The Finance Board needs this information to ensure that AHP subsidies provided by a Bank to a member are passed on to the ultimate borrower. *See* 12 U.S.C. 1430(j)(9)(E). The majority of Bank members already are required under other statutes[2] to collect the data the Finance Board proposes to add to the AHP database. Therefore, the incremental additional burden imposed to report the information to the Finance Board should be minimal.

In order to reduce data entry time, the Finance Board is proposing to change reporting for 19 data elements from a numeric format to a categorical (yes/no) entry. The Finance Board also expects to reduce the reporting frequency for project level data from up to eight times a year to one annual report.

To facilitate public input on these proposed changes, Appendix A lists the proposed AHP data elements and Appendix B is a side-by-side chart listing the existing AHP data elements that will be retained or eliminated in the proposed database.

D. Burden Estimate

In a **Federal Register** notice published in May 2004 (69 FR 24600 (May 4, 2004)), the Finance Board analyzed the cost and hour burden for the seven facets of the AHP information collection—AHP applications, AHP modification requests, AHP monitoring agreements, AHP recapture agreements, homeownership assistance program applications, verifications of statutory and regulatory compliance at the time of subsidy disbursement, and Bank Advisory Council reports and recommendations on AHP implementation plans. The total annual hour burden for four of the seven facets will not be affected by the proposed changes to the AHP database. These four facets are the same as in the May 2004 **Federal Register** notice and are not repeated here. The three facets that will be affected—AHP applications, AHP modification requests, and homeownership assistance program applications—are described in detail below.

The estimate for the total hour burden for applicant and member respondents for all seven facets of the AHP information collection, including the proposed changes, is 61,313 hours, a decrease of 1,725 hours.

1. AHP Applications

The Finance Board estimates that the proposed changes to the AHP database would reduce the 25 hour processing time for each application by 1 hour. The Finance Board estimates a total annual average of 2,050 applicants for AHP funding, with 1 response per applicant. The estimate for the total annual hour burden for AHP applications is 49,200 hours (2,050 applicants × 1 application × 24 hours).

2. AHP Modification Requests

The Finance Board estimates that the reduction in reporting frequency that is part of the proposed changes to the AHP database would reduce the 3-hour processing time for each modification request by 30 minutes. The Finance Board estimates a total annual average of 150 requests, with 1 response per requestor. The estimate for the total annual hour burden for AHP modification requests is 375 hours (150 requestors × 1 request × 2.5 hours).

3. Homeownership Assistance Program Applications

The Finance Board estimates that the proposed changes to the AHP database would increase the 2-hour processing time for each application by 10 minutes. The Finance Board estimates a total annual average of 2,400 homeownership assistance program applications, with 1 application per respondent. The estimate for the total annual hour burden for homeownership assistance program applications is 5,200 hours (2,400 respondents x 1 application x 130 minutes).

E. Comment Request

1. Proposed Changes to the AHP Database

The Finance Board requests comments on the utility and practicality of the proposed data elements, including whether additional elements should be included, deleted, or modified.

2. Paperwork Reduction Act Burden Estimate

The Finance Board requests written comments on the following: (1) Whether the collection of information is necessary for the proper performance of Finance Board functions, including whether the information has practical utility; (2) the accuracy of the Finance Board's estimates of the burdens of the collection of information; (3) ways to enhance the quality, utility, and clarity of the information collected; and (4) ways to minimize the burden of the collection of information on respondents, including through the use of automated collection techniques or other forms of information technology.

Dated: April 19, 2005.

By the Federal Housing Finance Board.

Mark J. Tenhundfeld,

General Counsel.

BILLING CODE 6725–01–P

[1] *See* 15 U.S.C. 1639; 12 CFR 226.31, *et seq.* For information about HOEPA go to: *http://www.the.gov/bcp/conline/pubs/homes/32mortgs.htm.*

[2] For instance, many Bank members already are required to collect geo-coding information and HOEPA status under the Home Mortgage Disclosure Act (HMDA). *See* 12 U.S.C. 2801 *et seq.* For information about HDMA reporting go to: *http://www.ffiec.gov/hmda/about.htm.* Members also are required to disclose the loan amount and interest rate to borrowers under the Truth in Lending Act (TILA). *See* 15 U.S.C. 1601 *et seq.* For information about TILA disclosure go to: *http://www.occ.treas.gov/handbook/til/pdf#search='Truth%20in%20Lending%20Act'.*

APPENDIX A

AFFORDABLE HOUSING PROGRAM ELECTRONIC DATABASE: PROPOSED DATA ELEMENTS

Explanatory Notes:

The Affordable Housing Program (AHP) consists of two funding streams: a competitive application program, (competitive application program) and a non-competitive homeownership assistance program (set-aside program). Under the terms of the competitive program a Federal Home Loan Bank (FHLBank) member submits an application that is rated and ranked by the FHLBank according to regulatory scoring criteria. Under the set-aside program, a member directly applies for funds to its FHLBank and uses the AHP funds to assist homeowners.

The Federal Housing Finance Board (Finance Board) expects the reporting period for detailed AHP project and application information will be the calendar year. Summary data may be required more frequently. Unless otherwise noted, information entered in the database will reflect the status of the data at the end of a calendar year reporting period. This information would be due to the Finance Board on March 15th following the end of the reporting period.

Most data elements reflect the characteristics of the project at the end of the calendar year in which the project was completed. Completion means when the project reaches full-occupancy or the development activity is completed, as appropriate to the type of activity. However, at the end of the calendar year some items of information may not be available. For example, housing projects that have not started would only report information on elements 1 through 8 (essential project information), element 19 (indicating the project has not started), and elements 22 and 24 (dollar amount of the AHP commitment).

For purposes of reporting information under the set-aside program, only those data elements identified in the Table at the end of this Appendix will be reported. This data should represent accurately the characteristics for each owner-occupied housing unit receiving AHP funds at the time of the mortgage closing or the completion of the activity, as appropriate. Data definitions are designed to give general guidance and will be more precisely defined when the database is implemented. The inclusion of any particular data element should not be interpreted as indicative of Finance Board policy.

The number preceding each data element in the list that follows is the identification number for that particular element. The term "categorical entry" refers to data entry equivalent to a "yes" or "no" answer. Numeric entry, as the term implies, refers to numeric entry appropriate to that category, such as dollar amounts or dates.

Affordable Housing Program: Proposed Data Element List[1]

(Note: Reporting requirements applicable to the set-aside program are identified separately in the Table at the end of this Appendix. The number preceding each data element is the identification number for that variable.)

Project Information: [explanatory heading; this is not a data field]

1. Federal Home Loan Bank number (1-12) [numeric entry]
2. End date of this reporting period (calendar year; dd/mm/year) [numeric entry]
3. AHP project ID number [numeric entry]
4. Date of AHP round (dd/mm/year)[2] [numeric entry]
5. Date of AHP commitment (by FHLBank) to applicant (dd/mm/year)[3] [numeric entry]
6. Member's FHFB ID number [numeric entry]
7. Project sponsor's name, address, state, zip code [alpha and numeric entry]
8. Project name, address, state, county, MSA, zip code, census tract.[4] [5] [alpha and numeric entries]

AHP Funding Stream [explanatory heading; this is not a data field]

9. AHP homeownership competitive application program [categorical entry]
10. AHP homeownership non-competitive program [categorical entry]
11. AHP rental housing [categorical yes/no entry]

Building type [explanatory heading; this is not a data field]

12. Single-family (1-4 units) [numeric entry]
13. Multifamily (5 units or more) [numeric entry]
14. Mixed use[6] [categorical entry]

---

[1] Unless otherwise noted, the definition for the data element is the same as in the AHP regulation (12 CFR part 951). Other definitions are included as footnotes.

[2] The date entered is the deadline for submission of AHP applications for that funding round.

[3] The date entered is the date when the FHLBank notifies the applicant of its eligibility to receive an AHP award.

[4] Entry will be coded consistent with coding instructions provided by the Federal Financial Institutions Examination Council accessed through the following link: http://www.ffiec.gov/geocode/default.htm.

[5] Projects with single family units would report this information for each property in which an AHP funded unit is located.

Tenure [explanatory heading; this is not a data field]

15. Owner-occupied [categorical entry]
16. Rental [categorical entry]
17. Number of years in retention agreement [numeric entry]

Project Status [explanatory heading; this is not a data field]

18. Project start date (date of first disbursement) [numeric mm/dd/year]
19. Project not started [categorical entry at year end]
20. Completion date [numeric mm/dd/year]
21. Withdrawal date (if applicable) [numeric mm/dd/year]

AHP Funds Per Project [explanatory heading; this is not a data field]

22. Dollar amount of AHP direct subsidy committed [numeric entry, commitment; year end report]
23. Dollar amount of AHP direct subsidy disbursed [numeric entry; after project completion; year end report]
24. Dollar amount of AHP advance subsidy committed [numeric entry, commitment at project start date; year end report]
25. Dollar amount of AHP advance subsidy disbursed [numeric entry at completion of project; year end report]
26. Dollar amount of advance on AHP subsidized advance[7] [numeric entry at draw down of advance; year end report]
27. Dollar amount of project funds de-obligated (if applicable)[8] [numeric entry; year end report] [Note to programmer: This data field should be reported as a separate report along with the project ID number, and can occur after the project is completed]
28. Dollar amount of project funds re-captured (if applicable)[9] [numeric entry; year end report] [Note to programmer: This data field should be included as a separate report along with the project ID number and can occur after the project is completed]

---

[6] Mixed use projects are projects with non-housing space, such as a commercial area, in the same building as the housing.

[7] The amount of the advance should be entered even if a member other than the AHP member/applicant drew down the advance.

[8] De-obligated funds are funds that have not been disbursed to the project as a result of the cancellation of the commitment, either by the FHLBank or the sponsor. Also included in this category are funds that have been returned to the FHLBank for reasons other than recapture for non-compliance.

[9] Recaptured funds are funds that have been disbursed to the project and then returned to the FHLBank as a result of non-compliance, per section 951.12 of the current AHP regulation, or its successor.

Project Development Activity[10] [explanatory heading; this is not a data field]

29. Construction [categorical entry]
30. Rehabilitation [categorical entry]
31. Acquisition [categorical entry]

Member Applicant(s) Participation [explanatory heading; this is not a data field]

32. Member financing [categorical entry]
33. FHLBank advance [categorical entry]
34. Mortgage [categorical entry]
35. Reduced closing costs [[categorical entry]
36. Other [categorical entry]

Priorities in AHP Statute [explanatory heading; this is not a data field]

37. Federal government property [[categorical entry]
38. HUD-owned property [categorical entry]
39. Non-profit sponsor [categorical entry]
40. State or local agency sponsor [categorical entry]
41. Housing authority sponsor [categorical entry]

Federal Program [explanatory heading; this is not a data field]

42. Home Investment Partnership Program [categorical entry]
43. Community Development Block Grants [categorical entry]
44. Federal Housing Administration [categorical entry]
45. Low-Income Housing Tax Credits [categorical entry]
46. Other federal housing program [categorical entry]

Special Needs [explanatory heading; this is not a data field]

47. Disabled [categorical entry]
48. Elderly [[categorical entry]
49. Recently homeless [categorical entry]
50. Households at or below 30 percent of area median income [categorical entry

[10] For purpose of the database, if AHP funds are used for the actual construction of the building the project should be classified as a new construction project. If the funds are used to assist homeowners to purchase a newly built or pre-owned home or by a project sponsor to acquire a building, the AHP funds would be considered an acquisition. AHP funds used to rehabilitate a pre-existing building or for the home improvement or rehabilitation of an existing home would qualify as a rehabilitation project.

Special Purpose Housing [explanatory heading; this is not a data field]

51. Rural [categorical entry]
52. Native American land [categorical entry]
53. Accessible design of units[11] [categorical entry]
54. SRO housing [categorical entry]
55. Family housing: 3 bedrooms or more [categorical entry]
56. Special needs and service-enriched housing[12] [categorical entry]
57. Community development or revitalization [categorical entry]

Project Units and Costs [explanatory heading; this is not a data field]

58. Number of units in project as proposed in AHP application [numeric entry]
59. Number of project units after completion [numeric entry]
60. Total development cost of housing project as proposed in AHP application[13] [numeric entry]
61. Total development cost of housing project at completion [numeric entry]
62. For mixed use projects: total project development cost (housing plus other uses) at time of project completion [numeric entry]

Additional Sources of Subsidy [explanatory heading; this is not a data field]

63. State [categorical entry]
64. Local [categorical entry]
65. Charitable [categorical entry]
66. Other [categorical entry]

---

[11] Accessible design is defined according to standards described in the Uniform Federal Accessibility Standards for dwelling units.

[12] Service enriched housing is housing serving special needs residents with on-site services and/or the project's management has made special arrangements for direct access by residents to such services as off-site health services, job training, education, after school care, day care, counseling, and other services.

[13] The project development cost is only applicable to the building(s) in which the AHP subsidized units will be located. The total project development cost should exclude non-housing uses, with the exception of contiguous common space for resident use.

Program Beneficiaries in AHP Competitive Program Homeownership Projects Only
[explanatory heading; this is not a data field]

67. Number of units affordable to households at or below 80 % of area median income as projected in the application[14] [numeric entry]
68. Number of units affordable to households at or below 80% of area median income at completion [numeric entry]
69. Number of units affordable to households at or below 50% of area median income at completion [numeric entry]
70. Number of units for first time homebuyers [numeric entry]

AHP Competitive Homeownership Program Use of Funds[15]
[explanatory heading; this is not a data field]

71. Interest rate write-down on home mortgage [categorical entry]
72. Principal reduction on home mortgage (down payment) [categorical entry]
73. Homeowner closing costs [categorical entry]
74. Homeowner counseling costs [categorical entry]
75. Second mortgage [categorical entry]

AHP Rental Housing Program Use of Funds: Entry for each project
[explanatory heading; this is not a data field]

76. Take-out/permanent loan [categorical entry]
77. Bridge loan [categorical entry]
78. Construction loan [categorical entry]
79. Principal reduction on mortgage [categorical entry]
80. Second mortgage [categorical entry]
81. Closing costs [categorical entry]
82. Refinance[16] [categorical entry]

---

[14] Resident income (household income) eligibility is defined as a certain percentage of the area median income. In the AHP, the target classification for very-low income households is at or below 50 percent of area median income. The classification for low- and moderate-income categories is at or below 80 percent of area median income.

[15] This entry applies to use of AHP funds in the project as a whole. Thus, one project may have more than one entry for the elements under this heading.

[16] According to Finance Board interpretation of the statute, refinancing is not permitted unless the refinancing results in the production of additional units.

Data for AHP Rental Housing Projects Only
[explanatory heading; this is not a data field]

83. Number of units affordable to households at or below 50% of area median income as proposed in the AHP application [numeric entry]
84. Number of units affordable to households at or below 50% of area median income after project completion[17] [numeric entry]
85. Number of units affordable to households between 51% and 60 % of area median income after completion [numeric entry]
86. Number of units affordable to households between 61% and 80 % of area median income after completion [numeric entry]
87. Number of units affordable to households at or below 100 percent of the area median income after completion[18] [numeric entry]
88. Dollar amount of additional subsidies after completion[19] [numeric entry]
89. Interest rate (stated as APR) on first mortgage loan [numeric entry]
90. Interest rate (stated as APR) on second mortgage [numeric entry]

Data Elements for Each AHP Unit in the Set-Aside Program
(see the Table for full reporting requirements)

91. Dollar amount of first mortgage [numeric entry]
92. Dollar amount of second mortgage [numeric entry]
93. Interest rate (APR) on first mortgage [numeric entry]
94. Interest rate (APR) on second mortgage [numeric entry]
95. HOEPA covered loan[20] [numeric entry]
96. Homeowner closing costs [numeric entry]

---

[17] The AHP statute requires that AHP funds for rental housing be projects in which at least 20 percent of the units are affordable to households with incomes at or below 50 percent of the area median income.

[18] This entry is for the total number of units in a project affordable to households at or below 100 percent of the area median income inclusive of all income categories below 80 percent of the area median income.

[19] This data field captures the additional dollar amount of subsidies not including the AHP subsidy.

[20] As required to be reported for financial institutions subject to the Home Ownership and Equity Protection Act of 1994.

Aggregated FHLBank Data: Competitive and Non-Competitive Programs

97. Number of competitive program applications received by the FHLBank [numeric entry]
98. Number of competitive program applications awarded AHP commitments [numeric entry]
99. Dollar amount of required annual AHP allocation[21] [numeric entry]
100. Dollar amount of AHP funds carried forward[22] [numeric entry]
101. Dollar amount of AHP accelerated funds[23] [numeric entry]
102. Dollar amount of AHP de-obligated funds[24] [numeric entry]
103. Dollar amount of AHP recaptured funds[25] [numeric entry]
104. Total dollar amount of AHP funds obligated[26] [numeric entry]
105. Total dollar amount of AHP funds disbursed[27] [numeric entry]
106. Total dollar amount of AHP competitive funds allocated [28] [numeric entry]
107. Total dollar amount of AHP competitive program funds disbursed [numeric entry]
108. Total dollar amount of AHP non-competitive program (homeownership set-aside) funds allocated [numeric entry]
109. Total dollar amount of AHP non-competitive homeownership funds disbursed [numeric entry]

---

[21] Per the requirement in 12 U.S.C. 1430(j)(5).

[22] This category applies to un-obligated funds from the prior year's allocation that are re-allocate to the current year reporting period. For example, in some situations an FHLBank may have a small amount of funds remaining from its annual allocation but the funds are not sufficient to cover the requested award by the next lowest scoring project.

[23] AHP funds from the following year's allocation that are applied to the current year, i.e. "accelerated."

[24] De-obligated funds are funds that have not been disbursed to the project as a result of the cancellation of the commitment, either by the FHLBank or the sponsor. Also included in this category are funds that have been returned to the FHLBank for reasons other than recapture for non-compliance.

[25] Recaptured funds are funds that have been disbursed to the project and then returned to the FHLBank as a result of non-compliance, per section 951.12 of the AHP regulation, or its successor.

[26] This total includes the annual AHP allocation plus funds carried forward, accelerated, de-obligated, and recaptured.

[27] Funds actually disbursed to applicants/projects.

[28] The amount of funds allocated for the competitive program should equal the FHLBank's total AHP allocation minus the allocation of funds for the set-aside program.

TABLE

Proposed Reporting Requirements for Non-Competitive Homeownership Program by Data Element Number

[Note: The term "project" applies to each housing unit receiving AHP funds]

1. Federal Home Loan Bank number (1-12) [numeric entry]
2. Beginning and end date of reporting period (dd/mm/year to dd/mm/year) [numeric entry]
3. AHP project ID number [numeric entry]
5. Date of AHP fund commitment to applicant [dd/mm/year to dd/mm/year) [numeric entry]
6. Member's FHFB ID number [numeric entry]
7. Project sponsor's name, address, state, zip code (if applicable) [numeric entry]
8. Project name, address, state, county, MSA, zip code, and census tract[29] [30] [numeric entry]
10. AHP homeownership non-competitive program [categorical entry]
15. Owner-occupied [categorical entry]
18. Project start date (date of first disbursement) [numeric mm/dd/year]
23. Dollar amount of AHP direct subsidy disbursed [numeric entry; after project completion; year end report]
27. Amount of project funds de-obligated (if applicable) [numeric entry; year end report]
28. Amount of project funds re-captured (if applicable) [numeric entry; year end report]
91. Dollar amount of first mortgage [numeric entry]
92. Dollar amount of second mortgage [numeric entry]
93. Interest rate (APR) on first mortgage [numeric entry]
94. Interest rate (APR) on second mortgage [numeric entry]
96. Other homeowner closing costs [numeric entry]

---

[29] For purposes of this reporting category the term "project" applies to each property in which an AHP subsidized project is located.

[30] Entry will be coded consistent with coding instructions provided by the Federal Financial Institutions Examination Council accessed through the following link: http://www.ffiec.gov/geocode/default.htm.

APPENDIX B

Side by Side of Existing AHP Database Fields Proposed for Retention (Yes) or Elimination (No) in Proposed Database

Existing Database	Yes[2]	No	Comment
Year	✓		
Round	✓		
Project Number within Round		✓	
FHFB Project Number	✓		
Alternate Project [1]		✓	
Member Tracking and Identifying Information			
District	✓		
Lead Member Name		✓	Member name replaced by member ID number.
Docket Number	✓		
Project Sponsor Information			
Name of Primary Sponsor	✓		
Sponsor Address	✓		
Sponsor City	✓		
Sponsor State	✓		
Sponsor ZIP	✓		
Multiple Sponsors		✓	
For-profit Sponsor		✓	
Project Location Description Information			
Project Name	✓		New database will also have location by census tract, MSA and by FHLBank District
Project City	✓		
Project State	✓		
Subsidy/Financing Description			
Financing by Member	✓		All dollar amounts changed to categorical data
Low-Income Housing Tax Credits	✓		
(Federal and State)	✓		Only federal credits will be tracked
State Housing Finance Agency (HFA)Loans (in thousands)	✓		

[1] An alternate is a wait-listed project

[2] In the proposed database, some categories checked in the "yes" column may be modified

Existing Database	Yes	No	Comment
State and Local Government Grants (in thousands)	✓		Fields marked "yes" will be retained but as categorical data not numeric data and may be merged or changed
Foundations (in thousands)		✓	
Historic Preservation Tax Credits (in thousands)		✓	
Community Development Block Grants (in thousands)	✓		
HOME Financing (in thousands)	✓		
McKinney Act Funding (in thousands)		✓	
Other HUD Financing (in thousands)	✓		Changed to "other federal housing program"
Other Financing – All debt financing not otherwise listed		✓	
Owner Equity		✓	
Other – All debt, equity, or other		✓	
financing		✓	
Section 8		✓	
Member Is Purchasing Tax Credits		✓	Member information will be applied only to use of AHP funds and reported as categorical fields
Permanent Loan by Member	✓		
Construction Loan by Member	✓		
Bridge Loan by Member	✓		
Other Loan by Member	✓		Changed to "second mortgage"
Total Development Cost (in thousands)	✓		Development costs retained in $ amounts.
Development Cost – Housing Portion (in thousands)	✓		
Subsidized Advance		✓	
Term of Subsidized Advance (years)	✓		
Amortization Period for Subsidized Advance	✓		
Advance Rate		✓	
Cost of Funds Rate		✓	
Present Value of Advance Subsidy		✓	
Member Loan Rate/Advance Involved		✓	Database will only ask for loan rate, whether or not the member issues the loan.
Amount of Direct Subsidy	✓		
Member Loan Rate/Direct Subsidy		✓	
		✓	
Interest-rate Buy down		✓	
Advance Subsidy Indicator (A=advance, S=direct subsidy, B=Both)		✓	Will be queried.
Total Subsidy	✓		
Subsidy per Subsidized Unit	See note	✓	
Cost per Unit			AHP subsidy per unit and cost per unit can be queried.
Leverage			

Existing Database	Yes	No	Comment
Project Description			
Project Type – Purchase of Existing Housing	✓		
Project Type – New Construction	✓		
Project Type – Rehabilitation	✓		
Project Type – Refinance	✓		
Start Date	✓		
Any Commercial Space	✓		New field will track "mixed use" buildings.
AHP Funds Used for Down Payment	✓		
or Closing Cost Assistance	✓		
AHP Funds Used for Counseling Fees	✓		
Scattered Site Development		✓	
Rural	✓		
Member Financial Interest	✓		
Total Units	✓		Unit fields are queried
Single-family Owner Units	✓		
Single-family Rental Units	✓		
Multifamily Owner Units	✓		
Multifamily Rental Units	✓		
Rental Units up to 50 percent of AMI	✓		
Rental Units 51 to 60 percent of AMI	✓		
Rental Units 61 to 80 percent of AMI	✓		
Rental Units over 80 percent of AMI	✓		
Owner Units up to 50 percent of AMI	✓		
Owner Units 51 to 80 percent of AMI	✓		
Homeless Units Set Aside		✓	Special needs categories may be renamed and grouped in the proposed data base. Other categories added. See (Elements 47-57)
Single-room Occupancy Units		✓	
Handicapped Units	✓		
Group Home Beds		✓	
Elderly Units	✓		
Family Units	✓		Owner and rental tenure fields are redundant and are eliminated.
Owner Tenure		✓	
Rental Tenure		✓	
Meets Donated Property Criterion		✓	
HUD/FHA Property	✓		
Other Federal Property	✓		Only U.S. government owned properties will be tracked because other properties are not a statutory priority.
State Government Property		✓	
Local Government Property		✓	
Other Donated Property		✓	
Meets Nonprofit Criterion	✓		New category added for households below 30% a.m.i.
Very Low-Income Units	✓		
Owner Units	✓		
Rental Units	✓		
Tenure		✓	
FHLBank Project Number	✓		**Comment**

Existing Database	Yes	No	
Member City	see note	✓	Member's I.D. can provide that information.
Member State		✓	
Multiple Members		✓	Prior awards can be queried.
Link to Previous AHP Project		✓	
Rental Targeting – 20 percent of Units for VLI			
Owner Targeting – 100 percent of Units for up to 80 percent of MI		✓	Redundant fields
Meets Homeless Criterion		✓	
Meets Empowerment Criterion		✓	
Empowerment –employment, education, or training	see note	✓	Fields for regulatory criteria, such as district priorities, are no longer tracked as district priorities, which can change. However, the database will track key fields such as formerly homeless, special needs, first-time homebuyer, rural, Native American etc. Some data fields have been renamed. See data elements 47-57 for Special Needs and Special Purpose Housing in the proposed database.
Empowerment met through counseling		✓	
Empowerment met through day care		✓	
Empowerment met through tenant involvement		✓	
Empowerment met through other provisions		✓	
Meets first district priority		✓	
District Priority One – Special Needs		✓	
District Priority One – Community Development		✓	
District Priority One – First-time Home Buyer		✓	
District Priority One –Member Participation		✓	
District Priority One – Natural Disaster		✓	
District Priority One –Rural		✓	
District Priority One – Urban		✓	
District Priority One – Economic Diversity		✓	
District Priority One – Fair Housing Remedy		✓	
District Priority One – Community Involvement		✓	
District Priority One – Lender Consortia		✓	
District Priority One – In district		✓	

Existing Database	Yes	No	Comment
Meets second district priority		✓	Fields for regulatory criteria, such as district priorities, are no longer tracked as district priorities, which can change. However, key categories, such as special needs, community development, first-time homebuyer will be tracked irrespective of whether they are or are not a district priority.
District Priority Two – Special Needs		✓	
District Priority Two – Community Development		✓	
District Priority Two – First-time Home Buyer		✓	
District Priority Two –Member Participation		✓	
District Priority Two – Natural Disaster		✓	
District Priority Two –Rural		✓	
District Priority Two – Urban		✓	
District Priority Two – Economic Diversity		✓	
District Priority Two – Fair Housing Remedy		✓	
District Priority Two – Community Involvement		✓	
District Priority Two – Lender Consortia		✓	
District Priority Two – Within District		✓	
District Priority Two –Other		✓	
Subsidy per Unit (Reported in thousands)		✓	
Community Stability Achieved through Stabilization Plan		✓	
Community Stability Achieved through Rehabilitation Plan		✓	
Community Stability Achieved through No Displacement		✓	
Community Stability Achieved through Resettlement Plan		✓	
Total Score		✓	Application scores to be eliminated
Score – Donated Properties		✓	
Score – Sponsorship		✓	
Score – Targeting		✓	
Score – Homeless		✓	
Score – Empowerment		✓	
Score – First District Priority		✓	
Score – Second District Priority		✓	
Score – Subsidy per Unit		✓	

Existing Database	Yes	No	Comment
Score – Stability		✓	
AHP PROJECT PROGRESS DATA *(tracks information as it changes throughout the life of the project)*		✓	Separate Reporting for Project Progress Eliminated. The database will track information for projects as completed. Thus, a separate database for project progress will not be needed. The proposed data will yield information on project progress, such as start dates and disbursements. The proposed database will also yield some comparisons between the commitments made by sponsors at the time of the application and the actual achievement when the project is completed.
Project Tracking and Identifying Information		✓	
Year			
Round			
Project Number within Round			
FHFB Project Number			
Alternate Project			
Member Tracking and Identifying Information		✓	
District			
Lead Member Name			
Docket Number			
Change of member name?			
Sponsor Information			
Name of Primary Sponsor	✓		
Change of sponsor name?		✓	
Subsidy Information			All fields for "subsidy information" would be retained, although in different format, and new fields incorporated for improved fund accounting
Advance Approved	✓		
Advance Drawn	✓		
Advance Subsidy Approved	✓		
Advance Subsidy Drawn	✓		
Direct Subsidy Approved	✓		
Direct Subsidy Drawn	✓		
Total Subsidy [Field calculated by FHFB]		✓	Verified but no longer calculated by FHFB
Total Subsidy Drawn [Field calculated by FHFB]		✓	
Updated Project Information	See note	✓	Proposed database will not track updates but will track some characteristics of a project as proposed and after completion
Units Approved		✓	
Units Single Family Owner			

1998 Database	Yes	No	Comment
Units Single Family Rental		✓	Fields will not be retained as separate entries but will be queried. New database would reflect status of projects as completed.
Units Multi-Family Owner		✓	
Units Multi-Family Rental		✓	
Units, Owner, Less than 50% median income		✓	
Units, Rental, Less than 50% median income		✓	
Units Complete		✓	
Start Date		✓	
Completion Date		✓	
Status (NOT STARTED or WITHDRAWN or COMPLETED or FUNDSDRAWN or STARTED)	✓		New fields for improved funds accounting will be added.
Modification affecting subsidy per unit?		✓	
FHLBank Project Number	✓		

[FR Doc. 05–8333 Filed 4–25–05; 8:45 am]

BILLING CODE 6725–01–C

GENERAL SERVICES ADMINISTRATION

Maximum Per Diem Rates for Arizona, Florida, Maryland, Missouri,New Jersey, New Mexico, New York, North Carolina, Ohio, Pennsylvania, Virginia, and Washington

AGENCY: Office of Governmentwide Policy, General Services Administration (GSA).

ACTION: Notice of Per Diem Bulletin 05–5, revised continental United States (CONUS) per diem rates.

SUMMARY: The General Services Administration (GSA) has reviewed the lodging rates of certain locations in the States of Arizona, Florida, Maryland, Missouri, New Jersey, New Mexico, New York, North Carolina, Pennsylvania, Virginia and Washington and determined that they are inadequate. The per diems prescribed in Bulletin 05–5 may be found at *http://www.gsa.gov/perdiem*.

DATES: This notice is effective April 26, 2005, and applies to travel performed on or after May 6, 2005.

FOR FURTHER INFORMATION CONTACT For clarification of content, contact Lois Mandell, Office of Governmentwide Policy, Travel Management Policy, at (202) 501–2824. Please cite FTR Per Diem Bulletin 05–5.

SUPPLEMENTARY INFORMATION:

A. Background

After an analysis of the per diem rates established for FY 2005 (see the **Federal Register** notices at 69 FR 53071, August 31, 2004, and 69 FR 60152, October 7, 2004), the per diem rate is being changed in the following locations:

State of Arizona

• All points in the Grand Canyon National Park and Kaibab National Forest within Coconino County

State of Florida

• Escambia County

State of Maryland

• Washington County

State of Missouri

• Pulaski County

State of New Jersey

• Essex, Bergen, Hudson and Passaic Counties

State of New Mexico

• Los Alamos and Rio Arriba Counties

State of New York

• Broome and Orange Counties

State of North Carolina

• Brunswick and Columbus Counties

State of Ohio

• Stark, Lake, Wayne, Medina, Mahoning and Trumbull Counties

State of Pennsylvania

• Franklin and Delaware Counties

State of Virginia

• Nelson County

State of Washington

• King County

B. Procedures

Per diem rates are published on the Internet at *www.gsa.gov/perdiem* as an FTR Per Diem Bulletin and published in the **Federal Register** on a periodic basis. This process ensures timely increases or decreases in per diem rates established by GSA for Federal employees on official travel within CONUS. Notices published periodically in the **Federal Register**, such as this one, now constitute the only notification of revisions in CONUS per diem rates to agencies.

Dated: April 19, 2005.

Becky Rhodes,

Deputy Associate Administrator.

[FR Doc. 05–8242 Filed 4–25–05; 8:45 am]

BILLING CODE 6820–14–S

GENERAL SERVICES ADMINISTRATION

The Fifth National Federal Fleet Manager Workshop and Information Fair (FedFleet 2005): Keeping in Tune

AGENCY: Office of Governmentwide Policy, General Services Administration (GSA).

ACTION: Notice.

SUMMARY: The General Services Administration (GSA) will hold its fifth National Federal Fleet Manager Workshop and Information Fair (FedFleet 2005): Keeping in Tune. FedFleet 2005 will take place June 7–9, 2005 at the Gaylord Opryland Hotel and Convention Center in Nashville, Tennessee. Nearly 1,300 fleet, procurement, personal property, transportation, and travel professionals within Federal, State, and local governments, as well as the private sector will attend. The Fleet Management Review Initiative will be a major focus of FedFleet 2005. The exhibitor information fair features the industry's latest technology, vehicles, products, and services. To learn more about FedFleet 2005 and to register, visit the FedFleet 2005 Web site at *http://www.fedfleet.org*.

FOR FURTHER INFORMATION CONTACT Mike Moses, Office of Governmentwide Policy, at (202) 501–2507, or by e-mail to *Mike.Moses@gsa.gov*.

Dated: April 20, 2005.

Russell H. Pentz,

Director, Vehicle Management Policy.

[FR Doc. 05–8292 Filed 4–25–05; 8:45 am]

BILLING CODE 6820–14–S

DEPARTMENT OF HEALTH AND HUMAN SERVICES

Solicitation of Nomination for Appointment to the Advisory Committee on Minority Health

AGENCY: Department of Health and Human Services, Office of the Secretary.

ACTION: Notice.

AUTHORITY: 42 U.S.C. 300u–6, Section 1707 of the Public Health Service Act, as amended. The Advisory Committee is governed by provisions of Public Law 92–463, as amended (5 U.S.C. Appendix 2), which sets forth standards for the formation and use of advisory committees.

SUMMARY: The Department of Health and Human Service (DHHS), Office of Public Health and Science (OPHS), is seeking nominations of qualified candidates to be considered for appointment as a member of the Advisory Committee on Minority Health (ACMH or Committee). In accordance with Public Law 105–392, the Committee provides advice to the Deputy Assistant Secretary for Minority Health (DASMH), on the development of goals and specific program activities of the Office of Minority Health (OMH) designed to improve the health of racial and ethnic minority groups. Nominations of qualified candidates are being sought to fill vacant positions on the Committee.

DATES: Nominations for membership on the Committee must be received no later than 5 p.m. e.s.t. on May 26, 2005, at the address listed below.

ADDRESSES: All nominations should be mailed or delivered to Dr. Garth Graham, Deputy Assistant Secretary for Minority Health; Office of Minority Health; Office of Public Health and Science; Department of Health and Human Services; 1101 Wootton Parkway, Suite 600; Rockville, MD 20852.

FOR FURTHER INFORMATION CONTACT: Ms. Monica Farrar, Executive Director, Advisory Committee on Minority Health, Office of Minority Health, Office of Public Health and Science, Department of Health and Human Services; 1101 Wootton Parkway, Suite 600; Rockville, MD 20852; telephone: (301) 443–5084.

A copy of the Committee charter and list of the current membership can be

obtained by contacting Ms. Farrar or by accessing the Web site managed by OMH at *http://www.omhrc.gov/acmh.*

SUPPLEMENTARY INFORMATION: Pursuant to Public Law 105–392, the Secretary of Health and Human Services established the Advisory Committee on Minority Health (ACMH). The Committee shall provide advice to the Deputy Assistant Secretary for Minority Health in carrying out the duties stipulated under Public Law 105–392. This includes providing advice to improve the health of each racial and ethnic minority group and in the development of goals and specific activities of the OMH, which are:

(1) Establish short-range and long-range goals and objectives and coordinate all other activities within the Public Health Service that relate to disease prevention, health promotion, service delivery, and research concerning such individuals;

(2) Enter into interagency agreements with other agencies of the Public Health Service;

(3) Support research, demonstrations, and evaluations to test new and innovative models;

(4) Increase knowledge and understanding of health risk factors;

(5) Develop mechanisms that support better information dissemination, education, prevention, and service delivery to individuals from disadvantaged backgrounds, including individuals who are members of racial or ethnic minority groups;

(6) Ensure that the National Center for Health Statistics collects data on the health status of each minority group;

(7) With respect to individuals who lack proficiency in speaking the English language, enter into contracts with public and nonprofit private providers of primary health services for the purpose of increasing the access of the individuals to such services by developing and carrying out programs to provide bilingual or interpretive services;

(8) Support a national minority health resource center to carry out the following: (a) Facilitate the exchange of information regarding matters relating to health information and health promotion, preventive health services, and education in appropriate use of health care; (b) facilitate access to such information; (c) assist in the analysis of issues and problems relating to such matters; (d) provide technical assistance with respect to the exchange of such information (including facilitating the development of materials for such technical assistance); and

(9) Carry out programs to improve access to health care services for individuals with limited proficiency in speaking the English language. Activities under the preceding sentence shall include developing and evaluating model projects.

Management and support services for the ACMH are provided by the OMH, which is a program office within the OPHS.

Nominations

The OPHS is requesting nominations for vacant positions on the ACMH. The Committee is composed of 12 voting members, in addition to non-voting *ex officio* members. This announcement is seeking nominations for voting members. Voting members of the Committee are appointed by the Secretary from individuals who are not officers or employees of the Federal Government and who have expertise regarding issues of minority health. To qualify for consideration of appointment to the Committee, an individual must possess demonstrated experience and expertise working on issues/matters impacting the health of racial and ethnic minority populations. The charter stipulates that the racial and ethnic minority groups shall be equally represented on the Committee membership.

Individuals selected for appointment to the Committee shall be invited to serve four year terms. Committee members who are not officers or employees of the United States Government will receive a stipend for attending Committee meetings and conducting other business in the interest of the Committee, including per diem and reimbursement for travel expenses incurred.

Nominations should be typewritten. The following information should be included in the package of material submitted for each individual being nominated for consideration: (1) A letter of nomination that clearly states the name and affiliation of the nominee, the basis for the nomination (*i.e.*, specific attributes which qualify the nominee for service in this capacity), and a statement that the nominee is willing to serve as a member of the Committee; (2) the nominator's name, address, and daytime telephone number, and the home and/or work address, telephone number, and e-mail address of the individual being nominated; and (3) a current copy of the nominee's curriculum vitae. The names of Federal employees should not be nominated for consideration of appointment to this Committee.

The Department makes every effort to ensure that the membership of DHHS Federal advisory committees is fairly balanced in terms of points of view represented and the committee's function. Every effort is made to ensure that a broad representation of geographic areas, females, ethnic and minority groups, and the disabled are given consideration for membership on DHHS Federal advisory committees. Appointment to this Committee shall be made without discrimination on the basis of age, race, ethnicity, gender, sexual orientation, disability, and cultural, religious, or socioeconomic status. Nominations must state that the nominee is willing to serve as a member of ACMH and appears to have no conflict of interest that would preclude membership. An ethics review is conducted for each selected candidate. Therefore, individuals selected for nomination will be required to provide detailed information concerning such matters as financial holdings, consultancies, and research grants or contracts to permit evaluation of possible sources of conflict of interest.

Dated: April 13, 2005.

Garth N. Graham,

Deputy Assistant Secretary for Minority Health.

[FR Doc. 05–8250 Filed 4–25–05; 8:45 am]

BILLING CODE 4150–29–P

DEPARTMENT OF HEALTH AND HUMAN SERVICES

National Institutes of Health

Government-Owned Inventions; Availability for Licensing

AGENCY: National Institutes of Health, Public Health Service, DHHS.

ACTION: Notice.

SUMMARY: The inventions listed below are owned by an agency of the U.S. Government and are available for licensing in the U.S. in accordance with 35 U.S.C. 207 to achieve expeditious commercialization of results of federally-funded research and development. Foreign patent applications are filed on selected inventions to extend market coverage for companies and may also be available for licensing.

ADDRESSES: Licensing information and copies of the U.S. patent applications listed below may be obtained by writing to the indicated licensing contact at the Office of Technology Transfer, National Institutes of Health, 6011 Executive Boulevard, Suite 325, Rockville, Maryland 20852–3804; telephone: 301/496–7057; fax: 301/402–0220. A signed Confidential Disclosure Agreement will be required to receive copies of the patent applications.

Composition and Methods for Diagnosis and Treatment of Metastatic Disease

Xin Wei Wang and Anuradha Budhu (NCI).

U.S. Provisional Application filed 8 Mar 2005 (DHHS Reference No. E–127–2005/0–US–01).

Licensing Contact: Michelle A. Booden; 301/451–7337; *boodenm@mail.nih.gov.*

Liver cancer, particularly hepatocellular carcinoma (HCC), is a leading cause of cancer deaths worldwide. In spite of recent progress in therapeutic strategies, prognosis of patients with advanced HCC remains very poor. Although routine screening of individuals at risk for developing HCC may extend the life of some patients, many are still diagnosed with advanced HCC and have little chance of survival. A small subset of HCC patients qualifies for surgical intervention, but the consequent improvement in long-term survival is only modest. The extremely poor prognosis of HCC is largely the result of a high rate of recurrence after surgery or of intra-hepatic metastases that develop through invasion of the portal vein or spread to other parts of the liver; extra-hepatic metastases are less common.

The present invention describes tools to determine a unique gene expression profile present in either liver parenchyma through needle biopsy or blood that can aid diagnosis or prognosis of HCC patients with or without metastatic potential. This method also provides a signature-derived polymerase chain reaction or serological screening method to identify drug candidates to treat metastatic or recurrent HCC.

In addition to licensing, the technology is available for further development through collaborative research opportunities with the inventors.

Aminoglycosides and Ribosome Inhibitors as Inhibitors of Tyrosyl-DNA-Phosphodiesterase

Drs. Yves Pommier and Zhi-Yong Liao (NCI).

DHHS Reference No. E–117–2005/0–US–01.

Licensing Contact: John Stansberry; 301/435–5236; *stansbej@mail.nih.gov.*

Cancer has long been a leading cause of mortality in the United States. DNA-damaging therapies, such as radiotherapy and chemotherapy, are the methods of choice for treating subjects with metastatic cancer or subjects with diffuse cancers such as leukemias. However, radiotherapy can cause substantial damage to normal tissue in the treatment field, resulting in scarring and, in severe cases, loss of function of the normal tissue. Although chemotherapy can provide a therapeutic benefit in many cancer subjects, it often fails to treat the disease because cancer cells may become resistant to the chemotherapeutic agent. To overcome these limitations additional antineoplastic strategies, such as enhancing the antineoplastic effect of existing therapies, are needed.

This invention discloses a method for enhancing an antineoplastic effect of a DNA-damaging therapy. The method includes administering to a subject having a neoplasm a therapeutically effective amount of the DNA-damaging therapy and a ribosome inhibitor that inhibits tyrosyl-DNA phosphodiesterase 1 (Tdp1) activity, wherein the ribosome inhibitor is administered in a sufficient amount to enhance the DNA-damaging therapy.

This disclosure also provides pharmaceutical compositions that include at least one chemotherapeutic agent and at least one ribosome inhibitor that inhibits Tdp1 activity, wherein the chemotherapeutic agent and the ribosome inhibitor are present in a therapeutically effective amount for the ribosome inhibitor to enhance an antineoplastic effect of the chemotherapeutic agent.

In addition to licensing, the technology is available for further development through collaborative research opportunities with the inventors.

Inhibition of Proteosome Function to Potentiate the Proapoptotic and Antitumor Activity of Cytokines

Jon Wigginton *et al.* (NCI).

U.S. Provisional Patent Application filed 23 Mar 2005 (DHHS Reference No. E–072–2005/0–US–01).

Licensing Contact: Michelle A. Booden; 301/451–7337; *boodenm@mail.nih.gov.*

Protein degradation via the ubiquitin-proteosome pathway is an important regulator of cell cycle progression and survival. Thus, inhibitors of this pathway can be directly cytotoxic and can sensitize several tumor cell types to cytotoxic chemotherapy and radiation.

Neuroblastoma is the most common extracranial solid tumor in children, and the development of clinical resistance to cytotoxic therapies is a major therapeutic obstacle in these patients. Several apoptosis abnormalities, which result from decreased expression of pro-apoptotic proteins, are associated with increased resistance to standard therapeutic interventions. In addition, neuroblastoma cells also show increased expression of several pro-survival proteins such as Bcl-2, FLIP, and AKT. Preclinical models suggest that IFN-gamma/TNF-alpha cytokines including IL–2, IL–12 and IL–18 among others may have potent antitumor efficacy in several preclinical models, and that these regimens may act by inducing an adaptive cell-mediated immune response. Although some single agent cytokine regimens have achieved modest efficacy in the clinical setting, the utility of some approaches has been limited overall by side effects that can be associated with high-dose cytokine therapy.

The present invention describes a method for combining ubiquitin-proteosome inhibitors with various cytokines to overcome mechanisms of tumor self-defense and sensitize both tumor and/or endothelial cell populations to apoptosis. These combination approaches may not only offer the prospect for improved therapeutic efficacy, but achieve these effects at lower, more clinically tolerable doses than can be achieved utilizing either respective agent alone. It is anticipated that this therapeutic intervention could be directed towards multiple human carcinomas, and potentiate the efficacy of multiple different cytokines both in the setting of oncology and infectious disease applications.

In addition to licensing, the technology is available for further development through collaborative research opportunities with the inventors.

Methods for Inhibiting or Treating Cancer

Ernest Hamel (NCI), *et al.*

U.S. Provisional Application No. 60/616,347 filed 05 Oct 2004 (DHHS Ref. No. E–323–2004/0–US–01).

Licensing Contact: Thomas P. Clouse; 301/435–4076; *clouset@mail.nih.gov.*

This invention describes novel arylthioindole derivatives having enhanced interaction with tubulin and increased effectiveness in growth inhibition of MCF–7 breast cancer cells as well as other cell types. Antitubulin drugs have an established role in the treatment of cancer, parasitic diseases and inflammatory disorders. These new chemical compounds have the potential to result in more effective therapeutics for the treatment of neoplastic, inflammatory and parasitic diseases.

In addition to licensing, the technology is available for further development through collaborative research opportunities with the inventors.

Regulation of ATG7 Beclin 1 Program of Autophagic Cell Death by Caspase-8

Michael Lenardo and Yu Li (NIAID), *et al.*

U.S. Provisional Application No. 60/556,857 filed 30 May 2004 (DHHS Reference No. E–318–2004/0–US–01).

Licensing Contact: Mojdeh Bahar; 301/435–2950; *baharm@mail.nih.gov.*

The invention discloses the role of autophagy in regulation cell death. Further it teaches a method of inducing autophagic cell death by administering a caspase inhibitor. The invention also discloses that autophagic cell death can be induced by caspase-8 inhibition and requires the genes ATG7 and Beclin 1.

In addition to licensing, the technology is available for further development through collaborative research opportunities with the inventors.

Cancer Specific SPANX–N Markers

Natalay Kouprina *et al.* (NCI).

DHHS Reference No. E–212–2004/0–US–01.

Licensing Contact: Mojdeh Bahar; 301/435–2950; *baharm@mail.nih.gov.*

The invention provides SPANX–N polypeptides, nucleic acids and antibodies that could be useful for detecting and treating prostate or other cancers. The SPANX–N genes are a family of related genes that are expressed in normal testis and in tumor cells in humans including melanoma, bladder carcinomas and myelomas. The SPANX cancer/testis antigens thus represent good candidates for diagnosis or treatment of several cancers.

In addition to licensing, the technology is available for further development through collaborative research opportunities with the inventors.

Methods for Inhibiting or Treating Cancer

Srividya Swaminathan, Shyam Sharan (NCI).

U.S. Provisional Application No. 60/588,918 filed 16 Jul 2004 (DHHS Reference No. E–160–2004/0–US–01).

Licensing Contact: Thomas P. Clouse; 301/435–4076; *clouset@mail.nih.gov.*

This invention describes a novel role for BRCA2 in the repair of O^6-alkylguanine adducts and provides evidence that after treatment with O^6-benzylguanine, tumor cells with intact BRCA2, are susceptible to ionizing radiations. In this invention the essential and novel function of BRCA2 in the repair of O^6-methylguanine is described and demonstrated. BRCA2 physically interacts with alkylated-AGT and undergoes repair-associated degradation. Treatment with O^6-benzylguanine renders cell radiation hypersensitive due to degradation of BRCA2. Radio-sensitization of tumors by O^6-benzylguanine should have a significant impact on cancer therapeutics. The elucidation of the mechanism of action for the chemotherapeutic agent O^6-benzylguanine relative to BRCA2 may potentially improve the success rate of treating BRCA2 expressing tumors.

In addition to licensing, the technology is available for further development through collaborative research opportunities with the inventors.

Chinese Hamster Ovary Cells Resistant to Colcemid With Altered beta-Tubulin

Michael M. Gottesman and Fernando R. Cabral (NCI).

DHHS Reference No. E–156–2004/0—Research Tool.

Licensing Contact: Thomas P. Clouse; 301/435–4076; *clouset@mail.nih.gov.*

The invention is Chinese hamster ovary cells (CHO) resistant to colcemid with altered beta-tubulin. These mutants establish the essential role of tubulin in forming mitotic spindles and identify beta-tubulin as the target for colcemid toxicity.

Cloning and Characterization of an Avian Adeno-Associated Virus and Uses Thereof

Ioannis Bossis (NIDCR).

U.S. Provisional Application No. 60/472,066 filed 19 May 2003 (DHHS Reference No. E–105–2003/0–US–01); PCT Application No. PCT/US04/15534 filed 18 May 2004, which published as WO 2005/017101 A2 on 24 Feb 2005 (DHHS Reference No. E–105–2003/0–PCT–02).

Licensing Contact: Jesse S. Kindra; 301/435–5559; *kindraj@mail.nih.gov.*

Currently, adeno-associated virus (AAV) represents the gene therapy vehicle of choice because it has many advantages over current strategies for therapeutic gene insertion. AAV is less pathogenic than other virus types; stably integrates into dividing and non-dividing cells; integrates at a consistent site in the host genome; and shows good specificity towards various cell types for targeted gene delivery.

To date, eight AAV isolates have been isolated and characterized, but new serotypes derived from other animal species may add to the specificity and repertoire of current AAV gene therapy techniques.

This invention describes vectors derived from an avian AAV. These vectors have innate properties related to their origin that may confer them with a unique cellular specificity in targeted human gene therapy. Therefore, vectors derived from this avian AAV are likely to find novel applications for gene therapy in humans and fowl.

This research has been described, in part, in Bossis and Chiorini (2003) J. Virol. (77)12:6799–6810.

Identification of Novel Birt-Hogg-Dubé (BHD) Gene

Laura S. Schmidt (NCI).

U.S. Patent Application No. 10/514,744 filed 16 Nov 2004 (DHHS Reference No. E–190–2002/2–US–02).

Licensing Contact: John Stansberry; 301/435–5236; *stansbej@mail.nih.gov.*

Birt-Hogg-Dubé (BHD) syndrome is an inherited autosomal dominant neoplasia syndrome characterized by benign hair follicle tumors and is associated with a higher risk for developing renal cancer, spontaneous pneumothorax and /or lung cysts.

The present invention describes identification of the BHD syndrome associated germline mutations in a novel human gene, herein called BHD gene. This gene encodes for the protein, folliculin, functions of which remain currently unknown.

This discovery makes possible the development of a diagnostic method for BHD syndrome using a simple blood test. The test is particularly useful in detecting BHD mutations in asymptomatic carriers within BHD families.

Patients with kidney tumors can be evaluated for BHD gene mutations using a similar genetic diagnostic test, which will allow for a more accurate diagnosis of a kidney cancer and improved patient prognosis. The BHD encoding sequence is the third gene found to be responsible for inherited kidney cancer, and mutation testing allows for a correct diagnosis and initiation of the proper treatment, which is different for each of the types of kidney cancer caused by the three genes. Since BHD is the first gene found to be associated with chromophobe renal cancer or renal oncocytoma, this invention will enable the development of specific treatments or therapies for these particular histologic types of kidney cancer.

Methods of using BHD encoding sequence also allows for a differential genetic diagnosis of spontaneous pneumothorax, or collapsed lung. Since collapsed lung can be caused by several factors, a BHD diagnostic test allows a physician to determine predisposition to and possible recurrence of additional spontaneous pneumothoraces due to mutation(s) in the BHD gene.

The discovery should also lead to the development of novel pharmaceutical products and methods for treating BHD skin lesions using creams containing the BHD gene product, folliculin. Such products and methods of treatment are expected to reduce the size and appearance of the benign hair follicle tumors.

The disclosed technology will provide new and exciting methodologies to correctly diagnose BHD syndrome and should lead to the development of novel pharmaceutical reagents for treatment of BHD skin lesions as well as other skin diseases.

This research is also described in: MB Warren *et al.*, Mod Pathol. (2004 Aug) 17(8):998–1011; ML Nickerson *et al.*, Cancer Cell (2002 Aug) 2(2):157–164; B Zbar *et al.*, Cancer Epidem. Bio. Prev. (2002 Apr) 11(4):393–400; LS Schmidt *et al.*, Am. J. Hum. Genet. (2001 Oct) 69(4):876–882; Toro *et al.*, Arch. Dermatol. (1999 Oct) 135(10): 1195–1202.

In addition to licensing, the technology is available for further development through collaborative research opportunities with the inventors.

Compositions Of Transforming Growth Factor Beta (TGF-beta) Which Promotes Wound Healing and Methods for Their Use

Michael Sporn *et al.* (NCI).

U.S. Patent No. 5,104,977, granted April 14, 1992, entitled ''Purified Transforming Growth Factor Beta'' (DHHS Ref. No. E–070–1982/2-US–05);

U.S. Patent No. 5,656,587, granted August 12, 1997, entitled ''Promotion Of Cell Proliferation By Use Of Transforming Growth Factor Beta (TGF-Beta)'' (DHHS Ref. No. E–070–1982/2-US–07); and

U.S. Patent No. 5,705,477, granted January 6, 1998, entitled ''Compositions Of Transforming Growth Factor Beta (TGF-Beta) Which Promotes Wound Healing And Methods For Their Use'' (DHHS Ref. No. E–070–1982/2-US–08).

Licensing Contact: Jesse S. Kindra; 301/435–5559; *kindraj@mail.nih.gov.*

There is a continuing need for the promotion of rapid cell proliferation at the site of wounds, burns, diabetic and decubitus ulcers, and other traumata. Prior to this invention, a number of ''growth factors'' were known to promote the rapid growth of cells. None of these growth factors, however, had been found to be pharmaceutically acceptable agents for the acceleration of wound healing.

This invention relates to compositions of Transforming Growth Factor beta (TGF-beta) which promote repair of tissue, particularly fibroblast cells, in animals and human beings. This invention also relates to a method of treating wounds by the topical or systemic administration of the compositions. The discovery of this invention initiated a worldwide field of research aimed at the characterization and development of TGF-beta in wound healing and disease. It is now known that TGF-beta's role in wound healing is complex. Its diverse effects on the many individual participating cell types in a wound are integrated into a specific temporal sequence of events within a defined tissue architecture. In addition to its many roles in wound healing, TGF-beta is also implicated in the pathogenesis of diseases such as autoimmune disease, fibrosis, and cancer.

Current research in TGF-beta biology is leading to the development of novel wound healing and disease therapies related to the growth factor and its signaling pathways.

Dated: April 18, 2005.

Steven M. Ferguson,

Director, Division of Technology Development and Transfer, Office of Technology Transfer, National Institutes of Health.

[FR Doc. 05–8287 Filed 4–25–05; 8:45 am]

BILLING CODE 4140–01–P

DEPARTMENT OF HEALTH AND HUMAN SERVICES

National Institutes of Health

National Institute of Nursing Research; Notice of Meeting

Pursuant to section 10(d) of the Federal Advisory Committee Act, as amended (5 U.S.C. appendix 2), notice is hereby given of a meeting of the National Advisory Council for Nursing Research.

The meeting will be open to the public as indicated below, with attendance limited to space available. Individuals who plan to attend and need special assistance, such as sign language interpretation or other reasonable accommodations, should notify the Contact Person listed below in advance of the meeting.

The meeting will be closed to the public in accordance with the provisions set forth in sections 552b(c)(4) and 552b(c)(6), Title 5 U.S.C., as amended. The grant applications and/or contract proposals and the discussions could disclose confidential trade secrets or commercial property such as patentable material, and personal information concerning individuals associated with the grant applications and/or contract proposals, the disclosure of which would constitute a clearly unwarranted invasion of personal privacy.

Name of Committee: National Advisory Council for Nursing Research.

Date: May 17–18, 2005.

Open: May 17, 2005, 1 p.m. to 5 p.m.

Agenda: For discussion of program issues and initiatives.

Place: National Institutes of Health, Building 31, 31 Center Drive, Bethesda, MD 20892.

Closed: May 18, 2005, 9 a.m. to 2 p.m.

Agenda: To review and evaluate grant applications and/or proposals.

Place: National Institutes of Health, Building 31, 31 Center Drive, Bethesda, MD 20892.

Contact Person: Mary E. Kerr, FAAN, RN, PhD, Deputy Director, National Institute of Nursing, National Institutes of Health, 31 Center Drive, Room 5B–05, Bethesda, MD 20892–2178, 301/496–8230, *kerrme@mail.nih.gov.*

Any member of the public interested in presenting oral comments to the committee may notify the Contact Person listed on this notice at least 10 days in advance of the meeting. Interested individuals and representatives of organizations may submit a letter of intent, a brief description of the organization represented, and a short description of the oral presentation. Only one representative of an organization may be allowed to present oral comments and if accepted by the committee, presentations may be limited to five minutes. Both printed and electronic copies are requested for the record. In addition, any interested person may file written comments with the committee by forwarding their statement to the Contact Person listed on this notice. The statement should include the name, address, telephone number and when applicable, the business or professional affiliation of the interested person.

Information is also available on the Institute's/Center's home page: *http://www.nih.gov/ninr/a_advisory.html*, where an agenda and any additional information for the meeting will be posted when available.

(Catalogue of Federal Domestic Assistance Program Nos. 93.361, Nursing Research, National Institutes of Health, HHS)

Dated: April 15, 2005.

Anna Snouffer,

Acting Director, Office of Federal Advisory Committee Policy.

[FR Doc. 05–8288 Filed 4–25–05; 8:45 am]

BILLING CODE 4140–01–M

DEPARTMENT OF HEALTH AND HUMAN SERVICES

National Institutes of Health

Prospective Grant of Exclusive License: Nitroxides as Protectors Against Oxidative Stress

AGENCY: National Institutes of Health, Public Health Service, DHHS.

ACTION: Notice.

SUMMARY: This is notice, in accordance with 35 U.S.C. 209(c)(1) and 37 CFR 404.7(a)(1)(i), that the National Institutes of Health (NIH), Department of Health and Human Services, is contemplating the grant of an exclusive license worldwide to practice the invention embodied in U.S. Patent 5,792,775, issued on August 11, 1998, entitled ''Nitroxides as Protectors Against Oxidative Stress,'' to Mitos, Inc. having a place of business in the State of California. The field of use may be limited to therapeutics for the treatment and/or protection of tissue damage caused by ionization radiation. The United States of America is the assignee of the patent rights in this invention. This announcement is the first notice to grant an exclusive license to this technology.

DATES: Only written comments and/or application for a license which are received by the NIH Office of Technology Transfer on or before June 27, 2005 will be considered.

ADDRESSES: Requests for a copy of the patent, inquiries, comments and other materials relating to the contemplated license should be directed to: Pradeep Ghosh, J.D., Ph.D., M.B.A., Technology Licensing Specialist, Office of Technology Transfer, National Institutes of Health, 6011 Executive Boulevard, Suite 325, Rockville, MD 20852–3804; telephone: (301) 435–5282; Facsimile: (301) 402–0220; e-mail: *ghoshpr@mail.nih.gov*.]

SUPPLEMENTARY INFORMATION: This technology relates to to the use of a biologically compatible composition containing an effective amount of a metal independent nitroxide compound as an antioxidant capable of protecting cells, tissues, organs, and whole organisms against deleterious effects of harmful oxygen-derived species generated during oxidative stress induced by ionizing radiations. Nitroxides are low molecular weight molecules and easily soluble in aqueous solutions. They are active within the biological pH range of 5–8, non-toxic at effective concentrations and can be easily attached to several organic molecules that may facilitate targeting of the molecules to specific organs or organelles. These properties of nitroxides make them ideal for treatment and protection of radiation induced cellular and tissue damages.

The prospective exclusive license will be royalty-bearing and will comply with the terms and conditions of 35 U.S.C. 209 and 37 CFR 404.7. The prospective exclusive license may be granted unless, within 60 days from the date of this published Notice, NIH receives written evidence and argument that establishes that the grant of the license would not be consistent with the requirements of 35 U.S.C. 209 and 37 CFR 404.7.

Properly filed competing applications for a license filed in response to this notice will be treated as objections to the contemplated license. Comments and objections submitted in response to this notice will not be made available for public inspection, and, to the extent permitted by law, will not be released under the Freedom of Information Act, 5 U.S.C. 552.

Dated: April 18, 2005.

Steven M. Ferguson,

Director, Division of Technology Development and Transfer, Office of Technology Transfer, National Institutes of Health.

[FR Doc. 05–8299 Filed 4–25–05; 8:45 am]

BILLING CODE 4140–01–P

DEPARTMENT OF HEALTH AND HUMAN SERVICES

Substance Abuse and Mental Health Services Administration

Agency Information Collection Activities: Proposed Collection; Comment Request

In compliance with section 3506(c)(2)(A) of the Paperwork Reduction Act of 1995 concerning opportunity for public comment on proposed collections of information, the Substance Abuse and Mental Health Services Administration will publish periodic summaries of proposed projects. To request more information on the proposed projects or to obtain a copy of the information collection plans, call the SAMHSA Reports Clearance Officer on (240) 276–1243.

Comments are invited on: (a) Whether the proposed collections of information are necessary for the proper performance of the functions of the agency, including whether the information shall have practical utility; (b) the accuracy of the agency's estimate of the burden of the proposed collection of information; (c) ways to enhance the quality, utility, and clarity of the information to be collected; and (d) ways to minimize the burden of the collection of information on respondents, including through the use of automated collection techniques or other forms of information technology.

Proposed Project: 2005 Client/Patient Sample Survey—New

The Substance Abuse and Mental Health Services Administration (SAMHSA), Center for Mental Health Services (CMHS) will conduct a sample survey of mental health programs (*i.e.*, inpatient, residential, and less than 24-hour care) within specialty mental health organizations. These organizations include psychiatric hospitals, general hospitals with separate psychiatric services, multiservice mental health organizations, residential treatment centers, and freestanding outpatient clinics and partial care organizations.

A sample of approximately 2,500 mental health organizations/programs will provide information on an average sample of 8 admissions and 8 persons under care in the programs. National estimates will be generated on the number of persons admitted to and under care in these organizations, and on the sociodemographic, clinical, and service use characteristics of these persons. This survey will update a previous sample survey conducted in 1997 (OMB No. 0930–0114).

In addition, the 2005 survey will include a consumer survey for the sampled adults under care in the less than 24-hour programs to obtain consumers' perceptions of care received. Respondents will have the option of responding electronically.

The annual burden estimate is shown below:

Respondent	No. of respondents	No. of responses per respondent	Average burden/response (hrs.)	Total annual burden (hrs.)
Mental Health Organization/Program	2,500	1	5.25	13,125
Consumer	8,000	1	0.25	2,000
Total	10,500			15,125

Send comments to Summer King, SAMHSA Reports Clearance Officer, Room 7–1044, 1 Choke Cherry Road, Rockville, MD 20850. Written comments should be received by June 27, 2005.

Dated: April 12, 2005.

Anna Marsh,

Executive Officer, SAMHSA.

[FR Doc. 05–8275 Filed 4–25–05; 8:45 am]

BILLING CODE 4162–20–P

DEPARTMENT OF HEALTH AND HUMAN SERVICES

Substance Abuse and Mental Health Services Administration

Agency Information Collection Activities: Submission for OMB Review; Comment Request

Periodically, the Substance Abuse and Mental Health Services Administration (SAMHSA) will publish a summary of information collection requests under OMB review, in compliance with the Paperwork Reduction Act (44 U.S.C. Chapter 35). To request a copy of these documents, call the SAMHSA Reports Clearance Officer on (240) 276–1243.

Proposed Project: Emergency Response Grants Regulations—42 CFR Part 51—(OMB No. 0930–0229)—Extension

This rule implements section 501(m) of the Public Health Service Act (42 U.S.C. 290aa), which authorizes the Secretary to make noncompetitive grants, contracts or cooperative agreements to public entities to enable such entities to address emergency substance abuse or mental health needs in local communities. The rule establishes criteria for determining that a substance abuse or mental health emergency exists, the minimum content for an application, and reporting requirements for recipients of such funding. SAMHSA will use the information in the applications to make a determination that the requisite need exists; that the mental health and/or substance abuse needs are a direct result of the precipitating event; that no other local, State, tribal or Federal funding sources are available to address the need; that there is an adequate plan of services; that the applicant has appropriate organizational capability; and, that the budget provides sufficient justification and is consistent with the documentation of need and the plan of services. Eligible applicants may apply to the Secretary for either of two types of substance abuse and mental health emergency response grants: Immediate awards and Intermediate awards. The former are designed to be funded up to $50,000, or such greater amount as determined by the Secretary on a case-by-case basis, and are to be used over the initial 90-day period commencing as soon as possible after the precipitating event; the latter awards require more documentation, including a needs assessment, other data and related budgetary detail. The Intermediate awards have no predefined budget limit. Typically, Intermediate awards would be used to meet systemic mental health and/or substance abuse needs during the recovery period following the Immediate award period. Such awards may be used for up to one year, with a possible second year supplement based on submission of additional required information and data. This program is an approved user of the PHS–5161 application form, approved by OMB under control number 0920–0428. The quarterly financial status reports in 51d.10(a)(2) and (b)(2) are as permitted by 45 CFR 92.41(b); the final program report, financial status report and final voucher in 51d.10(a)(3) and in 51d.10(b)(3–4) are in accordance with 45 CFR 92.50(b). Information collection requirements of 45 CFR part 92 are approved by OMB under control number 0990–0169. The following table presents annual burden estimates for the information collection requirements of this regulation.

42 CFR citation	Number of respondents	Responses per respondent	Hours per response	Annual burden hours
Immediate award application:				
51d.4(a) and 51d.6(a)(2)	3	1	3	*9
51d.4(b) and 51d.6(a)(2), Immediate Awards	3	1	10	*30
51d.10(a)(1)—Immediate awards—mid-program report if applicable	3	1	2	*6
Final report content for both types of awards:				
51d.10(c)	6	1	3	18
Total	6			18

*This burden is carried under OMB No. 0920–0428.

Written comments and recommendations concerning the proposed information collection should be sent by May 26, 2005 to: SAMHSA Desk Officer, Human Resources and Housing Branch, Office of Management and Budget, New Executive Office Building, Room 10235, Washington, DC 20503; due to potential delays in OMB's receipt and processing of mail sent through the U.S. Postal Service, respondents are encouraged to submit comments by fax to: (202) 395–6974.

Dated: April 14, 2005.

Anna Marsh,

Executive Officer, SAMHSA.

[FR Doc. 05–8278 Filed 4–25–05; 8:45 am]

BILLING CODE 4162–20–P

DEPARTMENT OF HOMELAND SECURITY

National Communications System

[Docket No. DHS–2005–0034]

Notice of Meeting of the National Security Telecommunications Advisory Committee

AGENCY: National Communications System (NCS).

ACTION: Notice of closed meeting.

SUMMARY: The President's National Security Telecommunications Advisory Committee (NSTAC) will meet in closed session on Wednesday, May 11, 2005, from 9:30 until 11:30 a.m., and from 12:55 until 3 p.m. The meeting will take place at the United States Chamber of Commerce, 1615 H Street, NW., Washington, DC. The NSTAC advises the President of the United States on issues and problems related to implementing national security and emergency preparedness (NS/EP) telecommunications policy.

FOR FURTHER INFORMATION CONTACT: Ms. Kiesha Gebreyes, Chief, Industry Operations Branch at (703) 235–5525, e-mail: *Kiesha.Gebreyes@dhs.gov,* or write the Manager, National Communications System, Department of Homeland Security, IAIP/NCS/N5, Mail Stop #8510, Washington, DC 20528–mail stop #8510.

SUPPLEMENTARY INFORMATION: Notice of this meeting is given under the Federal Advisory Committee Act (FACA), as amended (5 U.S.C. App. 2). The NSTAC will meet for purposes of: (1) Receiving briefings from senior government policy officials, and discussing with them, issues related to the Federal government's NS/EP telecommunications planning, architecture, and vulnerability mitigation activities; (2) reviewing the findings and conclusions of the Committee's Task Forces relative to issues such as the operation and evolution of existing emergency response plans and structures, potential NS/EP telecommunications vulnerabilities associated with the migration to next generation networks, critical telecommunications sector interdependencies, and the risks presented by the availability of critical telecommunications infrastructure information on an open source basis; (3) deliberating and voting upon proposed recommendations to address these issues; and (4) considering further issues and lines of inquiry to be undertaken in light of the findings.

A full and candid discussion concerning these subjects will likely implicate sensitive information concerning infrastructure vulnerabilities (some relating to government infrastructures) the public disclosure of which could frustrate significantly the Federal government's efforts to mitigate such vulnerabilities and safeguard such critical facilities from attack. It is also likely to entail discussion of privileged and confidential private sector security measures and planning activities that would not be made available to the government in a public forum.

Therefore, pursuant to section 10(d) of the Federal Advisory Committee Act, as amended, 5 U.S.C. App. 2 § 10(d), the Under Secretary for Information Analysis and Infrastructure Protection has determined that the subjects identified above will concern matters that, if prematurely disclosed, would significantly frustrate implementation of proposed agency actions, and would also likely disclose trade secrets and commercial or financial information obtained from a person and privileged or confidential. Accordingly, pursuant to 5 U.S.C. 552b(c)(4) and (9)(B), the meeting will be closed to the public.

Public Comments: You may submit comments, identified by DHS–2005–0034, by *one* of the following methods:

- EPA Federal Partner EDOCKET Web Site: *http://www.epa.gov/feddocket.* Follow instructions for submitting comments on the web site.
- Federal eRulemaking Portal: *http://www.regulations.gov.* Follow the instructions for submitting comments.
- E-mail: *NSTAC@dhs.gov.* When submitting comments electronically, please include DHS–2005–0034 in the subject line of the message.
- Mail: Office of the Manager, National Communications System, Department of Homeland Security, Washington, DC 20529. To ensure proper handling, please reference DHS–2005–0034 on your correspondence. This mailing address may also be used for paper, disk, or CD-ROM submissions.

All comments received will be posted without change to *http://www.epa.gov/feddocket,* including any personal information provided. For access to the docket, or to read background documents or comments received, go to *http://www.epa.gov/feddocket.* You may also access the Federal eRulemaking Portal at *http://www.regulations.gov.*

Basis for Closure: In accordance with Section 10(d) of the Federal Advisory Committee Act, as amended, 5 U.S.C. App. 2 § 10(d), the Under Secretary for Information Analysis and Infrastructure Protection has determined that this National Security Telecommunications Advisory Committee meeting is excluded from the Open Meetings requirement pursuant to the authority contained in 5 U.S.C. § 552b(c)(4) and (9)(b).

Dated: April 21, 2005.

Peter M. Fonash,

Acting Deputy Manager, National Communications System.

[FR Doc. 05–8289 Filed 4–25–05; 8:45 am]

BILLING CODE 4410–10–P

DEPARTMENT OF HOUSING AND URBAN DEVELOPMENT

[Docket No. FR–4959–N–02]

Modification of the Waivers Granted to and Alternative Requirements for Community Development Block Grant (CDBG) Disaster Recovery Grantees Under the Military Construction Appropriations and Emergency Hurricane Supplemental Appropriations Act, 2005

AGENCY: Office of the Secretary, HUD.

ACTION: Waiver for the State of Maryland.

SUMMARY: This notice advises the public of additional waivers of regulations and statutory provisions granted to CDBG disaster recovery grantees for the purpose of assisting in the recovery from the federally declared disasters that occurred between August 31, 2003, and October 1, 2004. As described in the **SUPPLEMENTARY INFORMATION** section of this notice, HUD is authorized by statute to waive statutory and regulatory requirements and specify alternative requirements for this purpose. This notice describes additional waivers requested by the State of Maryland to allow it to administer disaster recovery grant funds directly rather than by distributing funds to units of general local government or Indian tribes.

DATES: *Effective Date:* May 11, 2005.

FOR FURTHER INFORMATION CONTACT: Jan C. Opper, Director, Disaster Recovery and Special Issues, Office of Block Grant Assistance, Department of Housing and Urban Development, Room 7286, 451 Seventh Street, SW., Washington, DC 20410–7000, (202) 708–3587. Persons with hearing or speech impairments may access this number via TTY by calling the Federal Information Relay Service at (800) 877–8339. Facsimile (FAX) inquiries may be sent to Mr. Opper at (202) 401–2044. (Except for the ''800'' number, these telephone numbers are not toll-free.)

SUPPLEMENTARY INFORMATION:

Authority To Grant Waivers

The Military Construction Appropriations and Emergency Hurricane Supplemental Appropriations Act, 2005 (Pub. L.108–324, approved October 13, 2004) (the Act) appropriates $150 million in CDBG funds for disaster relief, long-term recovery, and mitigation directly related to the effects of the covered disasters. The Act authorizes the Secretary to waive, or specify alternative requirements for, any provision of any statute or regulation that the Secretary administers in connection with the obligation by the Secretary or use by the recipient of these funds, except for requirements related to fair housing, nondiscrimination, labor standards, and the environment, upon a finding that such waiver is required to facilitate the use of such funds and would not be inconsistent with the overall purpose of the statute.

The Secretary finds that the following waiver and alternative requirements are necessary to facilitate the use of these funds for their required purposes. The Secretary also finds that such uses of funds, as described below, are not inconsistent with the overall purpose of Title I of the Housing and Community Development Act of 1974, as amended, or the Cranston-Gonzalez National Affordable Housing Act, as amended.

Except as noted by published waivers and alternative requirements, the statutory and regulatory provisions governing the CDBG program for states, including those at 24 CFR part 570 subpart I, shall apply to the use of these funds granted to states. In a **Federal Register** notice published December 10, 2004 (69 FR 72100), and effective December 15, 2004, the Department promulgated waivers and alternative requirements necessary to facilitate the use of the subject grant funds.

Distribution of Funds Waiver

This notice waives requirements at 42 U.S.C. 5306 to the extent necessary to allow the State of Maryland to use its grant funds to directly carry out the state-funded and state-administered Hurricane Isabel Rehabilitation, Renovation, and Replacement Housing Program (HIRRRP) and other state-administered activities related to disaster relief, long-term recovery, and mitigation from the covered disaster. The HIRRRP program is designed to help disaster victims with housing repair after all other sources of assistance are exhausted. Although local governments carry out most HUD disaster recovery activities, in the aftermath of Hurricane Isabel the State of Maryland shifted the responsibility for helping impacted households from local governments and Indian tribes onto the state, primarily through implementation of the HIRRRP. The state has asked for this waiver primarily to permit its HUD disaster recovery grant to be used to supplement its existing HIRRRP funds and to bring the total funding for this program closer to closing the gap with the total estimated need. The notice also provides conforming waivers to and alternative requirements for related areas of the regulations.

In carrying out an activity directly, the State of Maryland must note that its environmental role is delineated at 24 CFR 58.4(b).

Description of Modifications

1. A new paragraph 22 is added to the requirements of the notice published on December 10, 2004 (69 FR 72100), by adding text to read as follows:

State of Maryland direct grant administration.

22. a. Provisions of 42 U.S.C. 5306 currently require a state to distribute CDBG funds to units of general local government or Indian tribes rather than to carry activities out directly. This notice waives 42 U.S.C. 5306 to the extent necessary to allow the State of Maryland to use its disaster recovery grant allocation directly to carry out HIRRRP and other state-administered activities related to disaster relief, long-term recovery, and mitigation from the covered disaster rather than distributing funds to units of general local government or to Indian tribes. The provisions of paragraph b. which follows, conform state CDBG rules to this waiver for the State of Maryland and do not apply to other disaster recovery grants under the Act.

b. These conforming waivers and alternative requirements also apply:

(i) At 24 CFR 570.480(c), with respect to the basis for HUD determining that the state has failed to carry out its certifications, such basis shall be that the state has failed to carry out its certifications in compliance with applicable program requirements.

(ii) 24 CFR 570.490(a) and (b) are waived and the following provision shall apply: ''State records. The state shall establish and maintain such records as may be necessary to facilitate review and audit by HUD of the state's administration of CDBG funds under § 570.493. Consistent with applicable statutes, regulations, waivers and alternative requirements, and other federal requirements, the content of records maintained by the state shall be sufficient to enable HUD to make the applicable determinations described at § 570.493; make compliance determinations for activities carried out directly by the state; and show how activities funded are consistent with the descriptions of activities proposed for funding in the action plan. For fair housing and equal opportunity purposes, and as applicable, such records shall include data on the racial, ethnic, and gender characteristics of persons who are applicants for, participants in, or beneficiaries of the program.'' 24 CFR 570.490(c) and (d) shall also apply.

(iii) Change of use of real property. In 24 CFR 570.489(j), (j)(1), and the last sentence of (j)(2), ''unit of general local government'' shall be read as ''unit of general local government or state.''

(iv) Responsibility for state review and handling of noncompliance. 24 CFR 570.492 is waived and the following alternative requirement applies: The state shall make reviews and audits including on-site reviews of any subrecipients, designated public agencies, and units of general local government as may be necessary or appropriate to meet the requirements of Section 104(e)(2) of the Act. In the case of noncompliance with these requirements, the state shall take such actions as may be appropriate to prevent a continuance of the deficiency, mitigate any adverse effects or consequences, and prevent a recurrence. The state shall establish remedies for noncompliance by any designated public agencies or units of general local government and for its subrecipients.

Dated: April 19, 2005.

Roy A. Bernardi,

Deputy Secretary.

[FR Doc. E5–1963 Filed 4–25–05; 8:45 am]

BILLING CODE 4210–29–P

DEPARTMENT OF HOUSING AND URBAN DEVELOPMENT

[Docket No. FR–4826–N–03]

Notice of Availability of Alternative Fuel Vehicle Reports

AGENCY: Office of the Assistant Secretary for Administration, HUD.

ACTION: Notice of availability of reports.

SUMMARY: Through this notice, HUD is making available on its website, a copy of HUD's Alternative Fuel Vehicles Report for Fiscal Year 2003 that was prepared in accordance with the Energy Policy Act of 1992.

FOR FURTHER INFORMATION CONTACT: Robert E. Byrd, Jr., Director, Facilities Management Division, Office of Administration, Department of Housing

and Urban Development, 451 Seventh Street, SW., Washington, DC 20410–3000, at (202) 708–1955 (this is not a toll-free number). Persons with hearing or speech impairments may access these numbers through TTY by calling the toll-free Federal Information Relay Service number at (800) 877–8339.

SUPPLEMENTARY INFORMATION: The Energy Policy Act (42 U.S.C. 13201 *et seq.*) (the Act) establishes a comprehensive plan to achieve economic, energy and environmental benefits by promoting the use of alternative fuels. A major goal of the Act is to have the Federal government exercise leadership in the use of alternative fuel vehicles. To that end, the Act established alternative fuel vehicle purchasing requirements for the Federal fleets of government agencies, and requires Federal agencies to report on their compliance with the requirements of the Act. A copy of HUD's Alternative Fuel Vehicle Reports can be obtained via the World Wide Web at *http://www.hud.gov/offices/adm/reports/admreports.cfm.*

Dated: April 15, 2005.

Darlene F. Williams,

General Deputy Assistant Secretary for Administration.

[FR Doc. E5–1962 Filed 4–25–05; 8:45 am]

BILLING CODE 4210–01–P

DEPARTMENT OF THE INTERIOR

Fish and Wildlife Service

Receipt of Applications for Permit

AGENCY: Fish and Wildlife Service, Interior.

ACTION: Notice of receipt of applications for permit.

SUMMARY: The public is invited to comment on the following applications to conduct certain activities with endangered species.

DATES: Written data, comments or requests must be received by May 26, 2005.

ADDRESSES: Documents and other information submitted with these applications are available for review, subject to the requirements of the Privacy Act and Freedom of Information Act, by any party who submits a written request for a copy of such documents within 30 days of the date of publication of this notice to: U.S. Fish and Wildlife Service, Division of Management Authority, 4401 North Fairfax Drive, Room 700, Arlington, Virginia 22203; fax (703) 358–2281.

FOR FURTHER INFORMATION CONTACT: Division of Management Authority, telephone (703) 358–2104.

SUPPLEMENTARY INFORMATION:

Endangered Species

The public is invited to comment on the following application(s) for a permit to conduct certain activities with endangered species. This notice is provided pursuant to section 10(c) of the Endangered Species Act of 1973, as amended (16 U.S.C. 1531, *et seq.*). Written data, comments, or requests for copies of these complete applications should be submitted to the Director (**ADDRESSES** above).

Applicant: Philadelphia Zoo, Philadelphia, PA, PRT–100017.

The applicant requests a permit to import up to 15 captive-born bicolored tamarin (*Saguinus bicolor*) from the Durrell Wildlife Conservation Trust, Jersey, United Kingdom for the purpose of enhancement of the survival of the species through captive propagation.

Applicant: Milwaukee County Zoological Gardens, Milwaukee, WI, PRT–099580.

The applicant requests a permit to import two captive-born male Siberian tigers (*Panthera tigris altaica*) from the Toronto Zoo, Toronto, Canada for the purpose of enhancement of the survival of the species through captive propagation.

Dated: April 8, 2005.

Monica Farris,

Senior Permit Biologist, Branch of Permits, Division of Management Authority.

[FR Doc. 05–8327 Filed 4–25–05; 8:45 am]

BILLING CODE 4310–55–P

DEPARTMENT OF THE INTERIOR

Fish and Wildlife Service

Receipt of Applications for Permit

AGENCY: Fish and Wildlife Service, Interior.

ACTION: Notice of receipt of applications for permit.

SUMMARY: The public is invited to comment on the following applications to conduct certain activities with endangered species.

DATES: Written data, comments or requests must be received by May 26, 2005.

ADDRESSES: Documents and other information submitted with these applications are available for review, subject to the requirements of the Privacy Act and Freedom of Information Act, by any party who submits a written request for a copy of such documents within 30 days of the date of publication of this notice to: U.S. Fish and Wildlife Service, Division of Management Authority, 4401 North Fairfax Drive, Room 700, Arlington, Virginia 22203; fax (703) 358–2281.

FOR FURTHER INFORMATION CONTACT: Division of Management Authority, telephone (703) 358–2104.

SUPPLEMENTARY INFORMATION:

Endangered Species

The public is invited to comment on the following applications for a permit to conduct certain activities with endangered species. This notice is provided pursuant to section 10(c) of the Endangered Species Act of 1973, as amended (16 U.S.C. 1531, *et seq.*). Written data, comments, or requests for copies of these complete applications should be submitted to the Director (**ADDRESSES** above).

Applicant: Shane Siers, University of Missouri, St. Louis, Missouri, PRT–102657.

The applicant requests a permit to import biological samples collected from live wild lemurs (*Lemur catta*) and (*Eulemur fulvus rufus*) in Madagascar for the purpose of scientific research.

Applicant: Zoological Society of San Diego, Conservation and Research for Endangered Species, San Diego, California, PRT–100279.

The applicant requests a permit to re-export biological samples collected from live wild black rhinoceros (*Diceros bicornis*) for the purpose of scientific research.

Dated: April 15, 2005.

Michael L. Carpenter,

Senior Permit Biologist, Branch of Permits, Division of Management Authority.

[FR Doc. 05–8329 Filed 4–25–05; 8:45 am]

BILLING CODE 4310–55–P

DEPARTMENT OF THE INTERIOR

Fish and Wildlife Service

Issuance of Permits

AGENCY: Fish and Wildlife Service, Interior.

ACTION: Notice of issuance of permit for marine mammals.

SUMMARY: The following permit was issued.

ADDRESSES: Documents and other information submitted with this application are available for review, subject to the requirements of the Privacy Act and Freedom of Information Act, by any party who submits a written

request for a copy of such documents to: U.S. Fish and Wildlife Service, Division of Management Authority, 4401 North Fairfax Drive, Room 700, Arlington, Virginia 22203; fax (703) 358–2281.

FOR FURTHER INFORMATION CONTACT: Division of Management Authority, telephone (703) 358–2104.

SUPPLEMENTARY INFORMATION: Notice is hereby given that on the dates below, as authorized by the provisions of the Marine Mammal Protection Act of 1972, as amended (16 U.S.C. 1361, *et seq.*), the Fish and Wildlife Service issued the requested permits subject to certain conditions set forth therein.

MARINE MAMMALS

Permit number	Applicant	Receipt of application **Federal Register** notice	Permit issuance date
097871	Gary S. Glesby	70 FR 5203; February 1, 2005	March 22, 2005.

Dated: April 8, 2005.

Monica Farris,

Senior Permit Biologist, Branch of Permits, Division of Management Authority.

[FR Doc. 05–8328 Filed 4–25–05; 8:45 am]

BILLING CODE 4310–55–P

DEPARTMENT OF THE INTERIOR

Bureau of Indian Affairs

Indian Gaming

AGENCY: Bureau of Indian Affairs, Interior.

ACTION: Notice of approved Tribal-State Compact.

SUMMARY: This notice publishes approval of the Tribal-State Compact between the State of Oklahoma and Seminole Nation of Oklahoma.

EFFECTIVE DATE: April 26, 2005.

FOR FURTHER INFORMATION CONTACT: George T. Skibine, Director, Office of Indian Gaming Management, Office of the Deputy Assistant Secretary—Policy and Economic Development, Washington, DC 20240, (202) 219–4066.

SUPPLEMENTARY INFORMATION: Under Section 11 of the Indian Gaming Regulatory Act of 1988 (IGRA), Public Law 100–497, 25 U.S.C. 2710, the Secretary of the Interior shall publish in the **Federal Register** notice of the approved Tribal-State Compact for the purpose of engaging in Class III gaming activities on Indian lands. This Compact authorizes the Seminole Nation of Oklahoma to engage in certain Class III gaming activities, provides for certain geographical exclusivity, limits the number of gaming machines at existing racetracks, and prohibits non-tribal operation of certain machines and covered games.

Dated: April 11, 2005.

Michael D. Olsen,

Acting Principal Deputy Assistant Secretary—Indian Affairs.

[FR Doc. 05–8241 Filed 4–25–05; 8:45 am]

BILLING CODE 4310–4N–P

DEPARTMENT OF THE INTERIOR

National Park Service

Revised Draft Backcountry Management Plan, General Management Plan Amendment and Environmental Impact Statement, Denali National Park and Preserve, AK

AGENCY: National Park Service, Interior.

ACTION: Notice of Availability of the Revised Draft Backcountry Management Plan, General Management Plan Amendment and Environmental Impact Statement.

SUMMARY: The National Park Service (NPS) announces the availability of the Revised Draft Backcountry Management Plan, General Management Plan Amendment and Environmental Impact Statement (EIS) for Denali National Park and Preserve. The document describes and analyzes the environmental impacts of a preferred alternative and three action alternatives for managing the park and preserve's backcountry. A no action alternative also is evaluated. This notice announces the 60-day public comment period and solicits comments on the revised draft plan and EIS.

DATES: Written comments on the revised draft plan and EIS must be received no later than June 27, 2005.

ADDRESSES: Comments on the revised draft plan and EIS should be submitted to the Superintendent, Denali National Park and Preserve, Post Office Box 9, Denali Park, Alaska 99755. Submit electronic comments to *dena_public_comment@nps.gov.* The revised draft EIS may be viewed online at *http://www.nps.gov/dena* through the ''in Depth'' link on our homepage under ''Planning and Management.'' Hard copies or CDs of the Revised Draft Backcountry Management Plan and General Management Plan Amendment and EIS are available by request from the aforementioned address.

FOR FURTHER INFORMATION CONTACT: Mike Tranel, Chief of Planning, Denali National Park and Preserve. Telephone: (907) 644–3611.

SUPPLEMENTARY INFORMATION: The National Park Service (NPS) is preparing a revised draft backcountry management plan and accompanying EIS that amends the 1986 General Management Plan for Denali National Park and Preserve. The purpose of the plan and EIS is to formulate a comprehensive plan for the backcountry, including designated wilderness, of Denali National Park and Preserve that will provide management direction over the next 15–20 years. The backcountry of Denali National Park and Preserve is defined to include the entire park except for those areas designated specifically for development in the entrance area and along the road corridor. Many issues to be addressed in the backcountry management plan, however, would affect the entire park, including developed areas. The NPS has initiated this management plan and EIS to address the rapidly growing level and diversity of uses, resource management needs, and the anticipated demand for future uses not foreseen or addressed in the 1986 General Management Plan.

The NPS developed a range of alternatives based on planning objectives, park resources, and public input. Each alternative represents a distinct vision for the park's backcountry. These alternatives describe actions related to management area designation, recreational activities, and administrative activities. Four alternatives in addition to a no-action alternative were developed.

The draft backcountry management plan was distributed for public review in February 2003, with the public comment period ending on May 30, 2003. The National Park Service received 9,370 comments on the draft plan. After careful consideration, the National Park Service concluded that alternatives presented in the draft would require significant modification to respond to the range of interests expressed in public comment. To give the public an opportunity to respond to

and contribute to further refinement of these modifications the National Park Service is publishing a Revised Draft. This draft contains four new alternatives and an accompanying Environmental Impact Statement. A Record of Decision is expected in the fall of 2005.

Alternative 1 (No Action): Current and projected conditions under this alternative provide a baseline for evaluating the changes and impacts of the other action alternatives. The NPS would continue the present management direction, guided by the 1986 General Management Plan, the 1997 Entrance Area and Road Corridor Development Concept Plan, the 1997 South Side Denali Development Concept Plan, the 1997 Strategic Plan, and backcountry management plans from 1976 and 1982. Recreational use and access patterns would continue to develop, and NPS would respond as necessary on a case-by-case basis. No new services or facilities would be developed to meet increased levels of use in the backcountry, except for those identified in the Entrance Area or South Side plans. This alternative represents ''no action'' for this plan. For all activities, the NPS would respond to changing use patterns as necessary to protect park resources, visitor safety, and visitor experience.

Alternative 2: This alternative would distinguish a unique Denali experience based on dispersed use in a wilderness landscape with few sights or sounds of people or mechanized civilization. There would be few services, facilities, or signs of management presence. This alternative would most clearly distinguish the backcountry experience in Denali from the surrounding lands, providing a place primarily for visitors who are very self-reliant, and would include many opportunities for extended expeditions in very remote locations. Backcountry users seeking other experiences would find those opportunities on neighboring lands.

Alternative 3: This alternative would provide opportunities for a variety of wilderness recreational activities by establishing areas to serve those visitors who want to experience the wilderness resource values of the Denali backcountry but require services, assistance, or have a limited amount of time. The areas would be the minimum necessary to provide these experiences based on present demand and would be focused along the park road in the Old Park and Kantishna and at the existing high activity areas at the Ruth Glacier and the Kahiltna Base Camp. The majority of the backcountry would be managed for dispersed, self-reliant travel and would include opportunities for extended expeditions in very remote locations.

Alternative 4 (NPS Preferred Alternative): This alternative would also provide opportunities for a variety of wilderness recreational activities and experiences by establishing areas to serve those visitors who want to experience the wilderness resource values of the Denali backcountry but require services, assistance, or have a limited amount of time. However, the areas would be of sufficient size to accommodate anticipated growth in the next 20 years and would be focused along the park road in the Old Park and Kantishna; at the Ruth, Tokositna, and Kahiltna Glaciers; and in the Dunkle Hills/Broad Pass area. The remainder of the backcountry would be managed for dispersed, self-reliant travel and would include opportunities for extended expeditions in very remote locations.

Alternative 5: This alternative would create two distinct geographic areas that provide different kinds of visitor experiences in the Denali backcountry. The Old Park and the Denali additions north of the Alaska Range would be primarily managed for dispersed, self-reliant travel although no areas would be managed specifically to preserve opportunities for extended expeditions in remote locations. Areas along the park road and in Kantishna that presently receive a relatively high volume of use and large parts of the additions south of the Alaska Range would be managed for a greater intensity and variety of appropriate recreational activities and would have more visible management presence and opportunities for more services and facilities.

Informational and Public Meetings

Informational meetings and public hearings will be scheduled in Alaska at the following locations: Anchorage, Fairbanks, Healy, Susitna Valley, and Cantwell. The specific dates and times of the meetings and public hearings will be announced in local media.

It is the practice of the National Park Service to make comments, including names and addresses of respondents, available for public review. An individual respondent may request that we withhold his or her address from the record, which we will honor to the extent allowable by law. If you wish to have NPS withhold your name and/or address, you must state this prominently at the beginning of your comments. NPS will make all submissions from organizations or businesses, and from individuals identifying themselves as representatives or officials of organizations or businesses, available for public inspection in their entirety.

Dated: April 20, 2005.

Anne. D. Castellina,

Acting Regional Director, Alaska.

[FR Doc. 05–8308 Filed 4–25–05; 8:45 am]

BILLING CODE 4310–HT–P

DEPARTMENT OF THE INTERIOR

National Park Service

Kaloko-Konokohau National Historical Park; Advisory Commission; Notice of Meeting

Notice is hereby given in accordance with the Federal Advisory Committee Act that a meeting of the Na Hoapili O Kaloko Honokohau, Kaloko-Honokohau National Historical Park Advisory Commission will be held at 9 a.m., May 7, 2005, at Kaloko-Honokohau National Historical Park headquarters, Kailua-Kona, Hawaii.

The agenda will be on discussions on the results of the Planning and Development of the Live-In Cultural Center workshop.

The meeting is open to the public. Disabled persons requiring special assistance should contact the Superintendent at (808) 329–6881 ext 7, 7 days prior to the meeting.

Minutes will be recorded for documentation and transcribed for dissemination. Minutes of the meeting will be available to the public after approval of the full Advisory Commission. Transcripts will be available after 30 days of the meeting.

For copies of the minutes, contact Kaloko-Honokohau National Historical Park at (808) 329–6881.

Dated: March 10, 2005.

Geraldine K. Bell,

Superintendent, Kaloko-Honokohau National Historical Park.

[FR Doc. 05–8307 Filed 4–25–05; 8:45 am]

BILLING CODE 4312–6H–M

DEPARTMENT OF THE INTERIOR

Bureau of Reclamation

Folsom Dam Road Restricted Access, Folsom, CA

AGENCY: Bureau of Reclamation, Interior.

ACTION: Notice of availability of the Final Environmental Impact Statement (EIS).

SUMMARY: Pursuant to the National Environmental Policy Act (NEPA) of 1969 (as amended), the Bureau of Reclamation (Reclamation) has prepared

a Final Environmental Impact Statement (EIS) for the Folsom Dam Road Restricted Access action. The action would entail a long-term decision on the closure of Folsom Dam Road to public access.

A Notice of Availability of the Draft EIS was published in the **Federal Register** on Friday, December 3, 2004 (69 FR 70278). The written comment period on the Draft EIS ended on Tuesday, January 18, 2005. The Final EIS contains responses to all comments received and reflects comments and any additional information received during the review period.

DATES: Reclamation will not make a decision on the proposed action until at least 30 days after release of the Final EIS. At the end of the 30-day period, Reclamation will complete a Record of Decision (ROD). The ROD will state the action that will be implemented and will discuss all factors leading to the decision.

ADDRESSES: A compact disk or copy of the Final EIS may be requested from Ms. Lynnette Wirth, Reclamation, by mail at 2800 Cottage Way, Sacramento, CA 95825; by e-mail at *lwirth@mp.usbr.gov* or by calling 916–978–5102. The final document is available online at *http://www.usbr.gov/mp/ccao/roadeis.* See the **SUPPLEMENTARY INFORMATION** section for locations where copies of the Final EIS are available for review and inspection.

FOR FURTHER INFORMATION CONTACT: Robert Schroeder, Project Manager, Bureau of Reclamation, at 916–989–7274.

SUPPLEMENTARY INFORMATION: The Final EIS addresses impacts from restricted access across Folsom Dam Road based on security issues and potential disaster flood inundation. The Preferred Alternative is the Restricted Access Alternative number two. The EIS also addresses a No-Action alternative that would reopen the road to public use similar to pre-2003 conditions, an alternative to keep the Road closed permanently to public access and two restricted access alternatives that includes the preferred alternative, and that restrict Folsom Dam Road access using a combination of vehicle inspections and restrictions on type and number of vehicles, and time of use. The Final EIS has identified the key issues to include traffic and circulation, socioeconomics, air quality, and recreation. In addition to the key issues listed above, Reclamation has identified other items that have also been included in the EIS. These include biology, water quality, cultural resources, ground water, water supply, power supply, municipal and industrial land uses, demographics, visual resources, public health, social well-being, power consumption and production, and cumulative effects.

Public hearings were held on the following dates and locations: Tuesday, January 4, 2005, in Sacramento, CA and Wednesday, January 5, 2005, in Folsom, CA.

Copies of the final documents are available for public inspection and review at the following locations:

- Sacramento Public Library, 828 I Street, Sacramento, CA 95814.
- Folsom Public Library, 300 Persifer Street, Folsom, CA 95630.
- Rancho Cordova Community Library, 9845 Folsom Blvd., Sacramento, CA 95827.
- Arden-Dimick Community Library, 891 Watt Avenue, Sacramento, CA 95864.
- Fair Oaks Community Library, 11601 Fair Oaks Boulevard, Fair Oaks, CA 95628.
- Orangevale Neighborhood Library, 8820 Greenback Lane, Suite L, Orangevale, CA 95662.
- Granite Bay Branch Library, 6475 Douglas Boulevard, Granite Bay, CA 95746.
- Cameron Park Library, 2500 Country Club Drive, Cameron Park, CA 95682.
- U.S. Bureau of Reclamation, Denver Office Library, Building 67, Room 167, Denver Federal Center, 6th and Kipling, Denver, CO 80225.
- U.S. Bureau of Reclamation, Office of Public Affairs, 2800 Cottage Way, Sacramento, CA 95825–1898; telephone: 916–978–5100.
- Natural Resources Library, U.S. Department of the Interior, 1849 C Street NW., Main Interior Building, Washington, DC 20240–0001.

Our practice is to make comments, including names and home addresses of respondents, available for public review. Individual respondents may request that we withhold their home address from public disclosure, which we will honor to the extent allowable by law. There may also be circumstances in which we would withhold a respondent's identity from public disclosure, as allowable by law. If you wish us to withhold your name and/or address, you must state this prominently at the beginning of your comment.

We will make all submissions from organizations or businesses, and from individuals identifying themselves as representatives or officials of organizations or businesses, available for public disclosure in their entirety.

Dated: April 11, 2005.

Kirk C. Rodgers,

Regional Director, Mid-Pacific Region.

[FR Doc. 05–8238 Filed 4–25–05; 8:45 am]

BILLING CODE 4310–MN–P

DEPARTMENT OF JUSTICE

Office of Community Oriented Policing Services; FY 2005 Community Policing Discretionary Grants

AGENCY: Office of Community Oriented Policing Services, Department of Justice.

ACTION: Notice of availability.

SUMMARY: The Department of Justice Office of Community Oriented Policing Services (COPS) announces the availability of funds over the Tribal Resources Grant Program. This program is designed to meet the most serious needs of law enforcement in Indian communities through a comprehensive grant program that will offer a variety of funding options including: New, additional police officer positions; basic and/or specialized training for sworn law enforcement officers; training in community policing, grants management and computer training; uniforms and basic issue equipment; department-wide technology; and police vehicles. This program, which complements the COPS Office's efforts to fund and support innovative community policing, will enhance law enforcement infrastructures and community policing efforts in tribal communities which have limited resources and are affected by high rates of crime and violence. Applications should reflect the department's most serious law enforcement needs and must link these needs to the implementation or enhancement of community policing.

All federally recognized tribes with established police departments are eligible to apply. Federally recognized tribes may also apply as a consortium with a written partnership agreement that names a lead agency and describes how requested resources will serve the consortium's population. In addition, tribes that are currently served by Bureau of Indian Affairs (BIA) law enforcement may request funding under this grant program to supplement their existing police services. Tribes whose law enforcement services are exclusively provided by local policing agencies through a contract agreement are not eligible under the COPS TRGP program.

DATES: Applications will be available in April 2005. Federal recognized tribes or villages that wish to apply may request

an application from the COPS Office. The deadline for the submission of applications is May 31, 2005. Applications must be postmarked by May 31, 2005 to be considered eligible.

ADDRESSES: To obtain an application or for more information, call the COPS Office Response Center at 1–800–421–6770. A copy of the application kit will also be available in April on the COPS Office Web site at *http://www.cops.usdoj.gov.*

FOR FURTHER INFORMATION CONTACT: The COPS Office Response Center, 1–800–421–6770 and ask to speak with your Tribal Grant Program Specialist.

SUPPLEMENTARY INFORMATION:

Overview

The Violent Crime Control and Law Enforcement Act of 1994 (Pub. L. 103–322) authorizes the Department of Justice to make grants to increase deployment of law enforcement officers devoted to community policing on the streets and rural routes in this nation. The Tribal Resources Grant Program was developed to meet the most serious needs of law enforcement in tribal communities through a comprehensive grant program that will offer a variety of funding options. This program will enhance law enforcement infrastructures and community policing efforts in these tribal communities, many of which have limited resources and are affected by high rates of crime and violence.

The Tribal Resources Grant Program is part of a larger federal initiative which, over the last seven years, has resulted in the Department of Interior and Justice working in collaboration to improve law enforcement in tribal communities. Funding has been appropriated to several DOJ agencies including the FBI, the Bureau of Justice Assistance (BJA), the Office of Juvenile Justice and Delinquency Prevention (OJJDP) and the COPS Office. COPS is coordinating with these agencies as well as with the Office of Law Enforcement Services of the Bureau of Indian Affairs to ensure that limited resources are not spent on duplicative efforts.

Approximately $20 million in funding will be available under the Tribal Resources Grant Program. The grant will cover a maximum federal share of 75% of total project costs. A local match requirement of at least 25% of total project cost is included in this program. A waiver of the local match requirement may be requested but will be granted only on the basis of documented demonstrated fiscal hardship. Requests for waivers must be submitted with the application.

Tribes whose law enforcement services are exclusively provided by local policing agencies through contract arrangements are not eligible under this COPS program.

Receiving an award under the Tribal Resources Grant Program will not preclude grantees from future consideration under other COPS grant programs for which they are eligible.

The Catalog of Federal Domestic Assistance (CFDA) reference for this program is 16.710.

Dated: April 17, 2005.

Carl Peed,

Director.

[FR Doc. 05–8239 Filed 4–25–05; 8:45 am]

BILLING CODE 4410–AT–M

DEPARTMENT OF JUSTICE

Antitrust Division

Notice Pursuant to the National Cooperative Research and Production Act of 1993—DVD Copy Control Association

Notice is hereby given that, on March 29, 2005, pursuant to section 6(a) of the National Cooperative Research and Production Act of 1993, 15 U.S.C. 4301 *et seq.* (''the Act''), DVD Copy Control Association (''DVD CCA'') has filed written notifications simultaneously with the Attorney General and the Federal Trade Commission disclosing changes in its membership. The notifications were filed for the purpose of extending the Act's provisions limiting the recovery of antitrust plaintiffs to actual damages under specified circumstances. Specifically, Advanced Driver Information Technology Corporation, Aichi-ken, Japan; Condor CD S.L., Calatayud, Spain; Coretek Limited, Hong Kong, Hong Kong-China; D-Link Systems, Inc., Fountain Valley, CA; Dyntec Disc Production Co., Ltd., Nakhon Pathom, Thailand; Hing Lung Technology (HK) Company Limited, Hong Kong, Hong Kong-China; Hitachi High Technologies Corporation, Tokyo, Japan; Honest Technology Co., Ltd., Daejeon, Republic of Korea; Kiss Technology A/S, Horsholm, Denmark; L&M Optical Disc West, LLC, Valencia, CA; Laser Disc Argentina S.A., Buenos Aires, Argentina; OptiDisk Corporation, Anaheim, CA; Princeton Technology Corp., Taipei, Taiwan; Seripress SAS, Bulgneville, France; Shin Heung Precision Co., Ltd., Kyunggi-Do, Republic of Korea; Ultra Source Technology Corp., Hong Kong, Hong Kong-China; Video Without Boundaries, Inc., Fort Lauderdale, FL; and World Electronic (Shenzhen) Co., Ltd., Guangdong, People's Republic of China have been added as parties to this venture.

Also, Accesstek, Inc., Hsin-Chu, Taiwan; Digipak Optical Disc, SA, Beriain, Spain; Enlight Corporation, Taoyuan, Taiwan; Flextronics International Denmark A/S, Pandrup, Denmark; Jiangsu Syber Electronic Co., Ltd., Jiangsu, People's Republic of China; and Shinwa Industries (China), Ltd., Xiamen, People's Republic of China have withdrawn as parties to this venture. Also, Malata Seeing & Hearing Equipment Co., Ltd. has changed its name to Nanjing Wanlida Seeing & Hearing Equipment Co., Ltd., Xiamen, People's Republic of China.

No other changes have been made in either the membership or planned activity of the group research project. Membership in this group research project remains open, and DVD CCA intends to file additional written notification disclosing all changes in membership.

On April 11, 2001, DVD CCA filed its original notification pursuant to section 6(b) of the Act. The Department of Justice published a notice in the **Federal Register** pursuant to section 6(b) of the Act on August 3, 2001 (66 FR 40727).

The last notification was filed with the Department on December 29, 2004. A notice was published in the **Federal Register** pursuant to section 6(b) of the Act on February 2, 2005 (70 FR 5483).

Dorothy B. Fountain,

Deputy Director of Operations, Antitrust Division.

[FR Doc. 05–8255 Filed 4–25–05; 8:45 am]

BILLING CODE 4410–11–M

DEPARTMENT OF JUSTICE

Antitrust Division

Notice Pursuant to the National Cooperative Research and Production Act of 1993—Globus Consortium, Inc.

Notice is hereby give that, on April 1, 2005, pursuant to section 6(a) of the National Cooperative Research and Production Act of 1993, 15 U.S.C. 4301 *et seq.* (''the Act''), Globus Consortium, Inc. has filed written notifications simultaneously with the Attorney General and the Federal Trade Commission disclosing changes in its membership. The notification were filed for the purpose of extending the Act's provisions limiting the recovery of antitrust plaintiffs to actual damages under specified circumstances. Specifically, International Business Machines Corporation, Armonk, NY;

Hewlett-Packard Company, Palo Alto, CA; Intel Corporation, Santa Clara, CA; and Univa Corporation, Elmhurst, IL have been added as parties to this venture.

No other changes have been made in either the membership or planned activity of the group research project. Membership in this group research project remains open, and Globus Consortium, Inc. intends to file education written notification disclosing all changes in membership.

On June 10, 2004, Globus Consortium, Inc. filed its original notification pursuant to section 6(a) of the Act. The Department of Justice published a notice in the **Federal Register** pursuant to section 6(b) of the Act on July 8, 2004 (69 FR 41281).

Dorothy B. Fountain,

Deputy Director of Operations, Antitrust Division.

[FR Doc. 05–8253 Filed 4–25–05; 8:45 am]

BILLING CODE 4410–11–M

DEPARTMENT OF JUSTICE

Antitrust Division

Notice Pursuant to the National Cooperative Research and Production Act of 1993—North America Outdoors, Inc.

Notice is hereby given that, on April 1, 2005, pursuant to section 6(a) of the National Cooperative Research and Production Act of 1993, 15 U.S.C. 4301 *et seq.* (''the Act''), North America Outdoors, Inc. (''AO'') has filed written notifications simultaneously with the Attorney General and the Federal Trade commission disclosing (1) the name and principal place of business of the standards development organization, and (2) the nature and scope of its standards development activities. The notifications were filed for the purpose of invoking the Act's provisions limiting the recovery of antitrust plaintiffs to actual damages under specified circumstances.

Pursuant to section 6(b) of the Act, the name and principal place of business of the standards development organization is: North America Outdoors, Inc., Knoxville, TN. The nature and scope of AO's standards development activities are: to provide an accreditation for risk management practices and procedures for companies providing outdoor recreation outfitting and guiding services to the public.

Dorothy B. Fountain,

Deputy Director of Operations Antitrust Division.

[FR Doc. 05–8251 Filed 4–25–05; 8:45 am]

BILLING CODE 4410–11–M

DEPARTMENT OF JUSTICE

Antitrust Division

Notice Pursuant to the National Cooperative Research and Production Act of 1993—OpenIB, Inc.

Notice is hereby given that, on April 1, 2005, pursuant to section 6(a) of the National Cooperative Research and Production Act of 1993, 15 U.S.C. 4301 *et seq.* (''The Act''), OpenIB, Inc. (''OpenIB'') has filed written notifications simultaneously with the Attorney General and the Federal Trade Commission disclosing (1) the name and principal place of business of the standards development organization and (2) the nature and scope of its standards development activities. The notifications were filed for the purpose of invoking the Act's provisions limiting the recovery of antitrust plaintiffs to actual damages under specified circumstances.

Pursuant to section 6(b) of the Act, the name and principal place of business of the standards development organization is: OpenIB, Inc., Hillboro, OR. The nature and scope of OpenIB's standards development activities are: (1) Supporting the creation of interoperable computer products by developing, maintaining, approving, testing, or promoting certain open-source software that may be combined into a suite or stack; (2) development and maintenance of those stacks (including related code, application programming interfaces, specifications, technical definitions, and programming guidelines); and (3) supporting the development activity of the software community.

Dorothy B. Fountain,

Deputy Director of Operations Antitrust Division.

[FR Doc. 05–8252 Filed 4–25–05; 8:45 am]

BILLING CODE 4410–11–M

DEPARTMENT OF JUSTICE

Antitrust Division

Notice Pursuant to the National Cooperative Research and Production Act of 1993—Semiconductor Test Consortium, Inc.

Notice is hereby given that, on March 30, 2005, pursuant to section 6(a) of the National Cooperative Research and Production Act of 1993, 15 U.S.C. 4301 *et seq.* (''the Act''), Semiconductor Test Consortium, Inc. has filed written notifications simultaneously with the Attorney General and the Federal Trade Commission disclosing changes in its membership. The notifications were filed for the purpose of extending the Act's provisions limiting the recovery of antitrust plaintiffs to actual damages under specified circumstances. Specifically, Taiwan Semiconductor, Hsin-Chu, Taiwan; Matsusita Electric Industrial Co., Kyoto, Japan; Test Insight, Ramat-Gan, Israel; and Syswave Corporation, Kawasaki, Japan have been added as parties to this venture.

No other changes have been made in either the membership or planned activity of the group research project. Membership in this group research project remains open, and Semiconductor Test Consortium, Inc. intends to file additional written notification disclosing all changes in membership.

On May 27, 2003, Semiconductor Test Consortium, Inc. filed its original notification pursuant to section 6(a) of the Act. The Department of Justice published a notice in the **Federal Register** pursuant to section 6(b) of the Act on June 17, 2003 (68 FR 35913).

The last notification was filed with the Department on January 12, 2005. A notice was published in the **Federal Register** pursuant to section 6(b) of the Act on February 11, 2005 (70 FR 7308).

Dorothy B. Fountain,

Deputy Director of Operations, Antitrust Division.

[FR Doc. 05–8254 Filed 4–25–05; 8:45 am]

BILLING CODE 4410–11–M

DEPARTMENT OF JUSTICE

Office of Justice Programs

[OJP (OJJDP) Docket No. 1417]

Meeting of the Federal Advisory Committee on Juvenile Justice

AGENCY: Office of Juvenile Justice and Delinquency Prevention, Office of Justice Programs, Justice.

ACTION: Notice of meeting.

SUMMARY: The Office of Juvenile Justice and Delinquency Prevention is announcing the meeting of the Federal Advisory Committee on Juvenile Justice (FACJJ), which will be held in Albuquerque, New Mexico, on May 17–18, 2005. The meeting times and location are noted below.

DATES: The schedule of events is as follows:

1. Tuesday, May 17, 2005

9 a.m.–12 p.m. and 1:30 p.m.–5 p.m. Discussion and Deliberation on FACJJ Recommendations to the President, Congress, and the Administrator of OJJDP (Open Sessions).

12 p.m.–1:30 p.m. Subcommittee meetings (Closed Sessions).

2. Wednesday, May 18, 2005

9 a.m.–12 p.m. Presentations on Indian Country issues and the resources to address them, by the Bureau of Indian Affairs, Indian Health Service, and local residents (Open Sessions).

ADDRESSES: The meeting will take place at the Hilton Albuquerque Hotel, 1901 University Boulevard, NE., Albuquerque, New Mexico, (505) 884–2500.

FOR FURTHER INFORMATION CONTACT: Robert Samuels, Acting Designated Federal Official, OJJDP, *Bob.Samuels@usdoj.gov,* or (202) 307–1357.

SUPPLEMENTARY INFORMATION: The Federal Advisory Committee on Juvenile Justice (FACJJ), established pursuant to Section 3(2)A of the Federal Advisory Committee Act (5 U.S.C. App. 2) will meet to carry out its advisory functions under section 223(f)(2)(C–E) of the Juvenile Justice and Delinquency Prevention Act of 2002. The FACJJ is composed of one representative from each state and territory. FACJJ duties include: reviewing Federal policies regarding juvenile justice and delinquency prevention; advising the OJJDP Administrator with respect to particular functions and aspects of OJJDP; and advising the President and Congress with regard to State perspectives on the operation of OJJDP and Federal legislation pertaining to juvenile justice and delinquency prevention. More information on FACJJ, including a list of members, may be found at *http://www.ojjdp.ncjrs.org/jjac/.*

Members of the public who wish to attend open sessions of the meeting should register by sending an e-mail with their name, affiliation, address, phone number, and a list of sessions they plan to attend to *JJAC@jjrc.org.* If e-mail is not available, please call (301) 519–6473 (Daryel Dunston). (**Note:** this is not a toll-free number.) Because space is limited, notification should be sent by Monday, May 9, 2005.

Written Comments

Interested parties may submit written comments by Monday, May 9, 2005, to Robert Samuels, Acting Designated Federal Official for the Federal Advisory Committee on Juvenile Justice, OJJDP, at *Bob.Samuels@usdoj.gov,* or by telephone at (202) 307–1357. (**Note:** this is not a toll-free number.) No oral presentations will be permitted at the meeting.

Dated: April 20, 2005.

J. Robert Flores,

Administrator, Office of Juvenile Justice and Delinquency Prevention.

[FR Doc. 05–8243 Filed 4–25–05; 8:45 am]

BILLING CODE 4410–18–P

COORDINATING COUNCIL ON JUVENILE JUSTICE AND DELINQUENCY PREVENTION

[OJP (OJJDP) Docket No. 1418]

Meeting of the Coordinating Council on Juvenile Justice and Delinquency Prevention

AGENCY: Coordinating Council on Juvenile Justice and Delinquency Prevention.

ACTION: Notice of meeting.

SUMMARY: The Coordinating Council on Juvenile Justice and Delinquency Prevention (Council) is announcing the June 3, 2005, meeting of the Council.

DATES: Friday, June 3, 2005, 9:15 a.m.–12:30 p.m.

ADDRESSES: The meeting will take place at the U.S. Department of Housing and Urban Development, 451 Seventh Street, SW., Washington, DC 20410.

FOR FURTHER INFORMATION CONTACT: Robert Samuels, Acting Designated Federal Official for the Coordinating Council on Juvenile Justice and Delinquency Prevention, by telephone at 202–307–1357, or by e-mail at *Bob.Samuels@usdoj.gov.*

SUPPLEMENTARY INFORMATION: The Coordinating Council on Juvenile Justice and Delinquency Prevention, established pursuant to Section 3(2)A of the Federal Advisory Committee Act (5 U.S.C. App. 2) will meet to carry out its advisory functions under Section 206 of the Juvenile Justice and Delinquency Prevention Act of 2002, 42 U.S.C. 5601, *et seq.* Documents such as meeting announcements, agendas, minutes, and interim and final reports will be available on the Council's Web page at *http://www.JuvenileCouncil.gov.* (You may also verify the status of the meeting at that Web address.)

Although designated agency representatives attend, the Council is composed of the Attorney General (Chair), the Secretary of Health and Human Services, the Secretary of Labor, the Secretary of Education, the Secretary of Housing and Urban Development, the Administrator of the Office of Juvenile Justice and Delinquency Prevention (Vice Chair), the Director of the Office of National Drug Control Policy, the Chief Executive Officer of the Corporation for National and Community Service, and the Assistant Secretary for Homeland Security, Immigrations and Customs Enforcement. Nine additional members are appointed by the Speaker of the House of Representatives, the Senate Majority Leader, and the President of the United States.

Meeting Agenda

The agenda for this meeting will include: (a) A review of the past meeting and written public comments; (b) presentations on the U.S. Department of Housing and Urban Development programs and Youth-Serving organizations; and (c) discussion and plans for future coordination.

For security purposes, members of the public who wish to attend the meeting must pre-register by calling the Juvenile Justice Resource Center at 301–519–6473 (Daryel Dunston) or 301–519–5790 (Karen Boston), no later than Friday, May 27, 2005. (**Note:** these are not toll-free telephone numbers.) Additional identification documents may be required. To register online, please go to *http://www.JuvenileCouncil.gov/meetings.html.* Space is limited.

Note: Photo identification will be required for admission to the meeting.

Written Comments: Interested parties may submit written comments by Friday, May 27, 2005, to Robert Samuels, Acting Designated Federal Official for the Coordinating Council on Juvenile Justice and Delinquency Prevention, at *Bob.Samuels@usdoj.gov.* The Coordinating Council on Juvenile Justice and Delinquency Prevention expects that the public statements presented will not repeat previously submitted statements. No oral comments will be permitted at this meeting.

Dated: April 20, 2005.

J. Robert Flores,

Vice-Chair, Coordinating Council on Juvenile Justice and Delinquency Prevention.

[FR Doc. 05–8244 Filed 4–25–05; 8:45 am]

BILLING CODE 4410–18–P

NATIONAL AERONAUTICS AND SPACE ADMINISTRATION

[Notice 05–080]

Notice of Prospective Patent License

AGENCY: National Aeronautics and Space Administration.

ACTION: Notice of Prospective Patent License.

SUMMARY: NASA hereby gives notice that Penske Racing South, Inc. of 136 Knob Hill Road, Mooresville, NC 28117–6847, has applied for a Partially Exclusive license to practice the inventions described and claimed in U.S. Patent No(s). 4,829,035, entitled ''Reactivation Of A Tin Oxide-Containing Catalyst,'' 4,855,274, entitled ''Process For Making A Noble Metal On Tin Oxide Catalyst,'' 4,912,082, entitled ''Catalyst For Carbon Monoxide Oxidation,'' 4,991,181, entitled ''Catalyst For Carbon Monoxide Oxidation,'' 5,585,083, entitled ''Catalytic Process For Formaldehyde Oxidation,'' and 6,132,694, entitled ''Catalyst For Oxidation Of Volatile Organic Compounds,'' all of which are assigned to the United States of America as represented by the Administrator of the National Aeronautics and Space Administration. Written objections to the prospective grant of a license should be sent to Langley Research Center.

DATES: Responses to this notice must be received by May 11, 2005.

FOR FURTHER INFORMATION CONTACT: Helen M. Galus, Patent Attorney, Langley Research Center, Mail Stop 141, Hampton, VA 23681–2199. Telephone 757–864–3227; Fax 757–864–9190.

Keith T. Sefton,

Deputy General Counsel (Administration and Management).

[FR Doc. 05–8337 Filed 4–25–05; 8:45 am]

BILLING CODE 7510–13–P

NATIONAL AERONAUTICS AND SPACE ADMINISTRATION

[Notice 05–079]

Notice of Prospective Patent License

AGENCY: National Aeronautics and Space Administration.

ACTION: Notice of Prospective Patent License.

SUMMARY: NASA hereby gives notice that Phoenix Systems International, Inc. of Pine Brooke, NJ, has applied for an exclusive, world-wide foreign patent license to practice the invention described and claimed in NASA Case No. KSC–12664–3–PCT entitled ''Emission Control System,'' which is assigned to the United States of America as represented by the Administrator of the National Aeronautics and Space Administration. Written objections to the prospective grant of an exclusive license to Phoenix Systems International, Inc. should be sent to Assistant Chief Counsel/Patent Counsel, NASA, Mail Code: CC–A, Office of the Chief Counsel, John F. Kennedy Space Center, Kennedy Space Center, FL 32899.

DATES: Responses to this Notice must be received on or before June 27, 2005.

FOR FURTHER INFORMATION CONTACT: Randall M. Heald, Patent Counsel/Assistant Chief Counsel, NASA, Office of the Chief Counsel, John F. Kennedy Space Center, Mail Code: CC–A, Kennedy Space Center, FL 32899, telephone (321) 867–7214.

Dated: April 18, 2005.

Keith T. Sefton,

Deputy General Counsel, Administration and Management.

[FR Doc. 05–8336 Filed 4–25–05; 8:45 am]

BILLING CODE 7510–13–P

NUCLEAR REGULATORY COMMISSION

Application for License To Export Major Components for Nuclear Reactors

Pursuant to 10 CFR 110.70(b)(1) ''Public notice of receipt of an application,'' please take notice that the Nuclear Regulatory Commission has received the following request for an export license. Copies of the request are available electronically through ADAMS and can be accessed through the Public Electronic Reading Room (PERR) link *http://www.nrc.gov/NRC/ADAMS/index.html* at the NRC home page.

A request for a hearing or petition for leave to intervene may be filed within 30 days after publication of this notice in the **Federal Register**. Any request for hearing or petition for leave to intervene shall be served by the requestor or petitioner upon the applicant, the Office of the General Counsel, U.S. Nuclear Regulatory Commission, Washington DC 20555; the Secretary, U.S. Nuclear Regulatory Commission, Washington, DC 20555; and the Executive Secretary, U.S. Department of State, Washington, DC 20520.

In its review of an application for a license to export major components of a utilization facility as defined in 10 CFR part 110 and noticed herein, the Commission does not evaluate the health, safety or environmental effects in the recipient nation of the facility to be exported. The information concerning the application follows.

NRC EXPORT LICENSE APPLICATION FOR MAJOR COMPONENTS FOR NUCLEAR REACTORS

Name of applicant Date of application Date received Application No., Docket No.	Description	End use	Country of destination
Curtiss-Wright Electro-Mechanical Corporation. March 18, 2005 March 21, 2005 ..... XR170 11005552	Five (5) complete reactor coolant pumps, including motors, related equipment and spare parts as specified in 10 CFR Part 110 Appendix A item (4). Approximate Dollar Value: Proprietary.	Qinshan Phase 2, Units 1, 2, 3, and 4 Nuclear Power Reactors.	People's Republic of China.

Dated this 12th day of April 2005 at Rockville, Maryland.

For the Nuclear Regulatory Commission.

Margaret M. Doane,

Deputy Director, Office of International Programs.

[FR Doc. 05–8266 Filed 4–25–05; 8:45 am]

BILLING CODE 7590–01–P

NUCLEAR REGULATORY COMMISSION

[Docket No. 50–368]

Entergy Operations, Inc.; Arkansas Nuclear One, Unit 2; Exemption

1.0 Background

Entergy Operations, Inc. (the licensee) is the holder of Facility Operating License No. NPF–6 which authorizes operation of the Arkansas Nuclear One, Unit 2 (ANO–2) nuclear power plant. The license provides, among other things, that the facility is subject to all rules, regulations, and orders of the Nuclear Regulatory Commission (NRC, the Commission) now or hereafter in effect.

The facility consists of a pressurized water reactor located in Pope County, Arkansas.

2.0 Request/Action

Title 10 of the Code of Federal Regulations (10 CFR), part 50, appendix A, General Design Criterion (GDC) 57, regarding closed system containment isolation valves (CIVs), states:

> Each line that penetrates primary reactor containment and is neither part of the reactor coolant pressure boundary nor connected directly to the containment atmosphere shall have at least one containment isolation valve which shall be either automatic, or locked closed, or capable of remote manual operation. This valve shall be outside containment and located as close to the containment as practical. A simple check valve may not be used as the automatic isolation valve.

By application dated October 30, 2003, and supplemented by a letters dated July 1, November 15, and December 3, 2004, and March 3, 2005, the licensee requested a permanent exemption from 10 CFR part 50, appendix A, GDC 57 for certain CIVs at ANO–2. Specifically, the licensee requests an exemption for the applicable manual upstream CIV associated with the emergency feedwater (EFW) system steam trap and the applicable manual upstream CIV associated with the atmospheric dump valve (ADV) drain steam trap. This will allow the plant to operate at power with these CIVs open, rather than locked closed.

The CIVs under review are located on main steam lines outside containment, but upstream of the main steam isolation valves (MSIVs). The main steam and feedwater lines inside containment, in combination with the secondary side of the steam generators, constitute closed systems inside containment, so GDC 57 applies. The CIVs are not automatic or capable of remote manual operation, and the licensee does not wish to keep them locked closed.

3.0 Discussion

Pursuant to 10 CFR 50.12, the Commission may, upon application by any interested person or upon its own initiative, grant exemptions from the requirements of 10 CFR part 50 when (1) the exemptions are authorized by law, will not present an undue risk to public health or safety, and are consistent with the common defense and security; and (2) when special circumstances are present.

Special circumstances, in accordance with 10 CFR 50.12(a)(2)(ii), are present in that plant operation with the applicable manual upstream CIV associated with the EFW system steam trap and the applicable manual upstream CIV associated with the ADV drain steam trap in the closed position is not necessary to achieve the underlying purpose of 10 CFR part 50, appendix A, GDC 57. The staff's rationale is as follows.

Operation With the EFW Steam Trap CIVs and the ADV Drain Steam Trap CIVs Open

The steam supply lines for the ANO–2 EFW pump and the ADVs tap off of the ''A'' and ''B'' main steam headers outside containment and upstream of the MSIVs. The steam supply from the ''B'' main steam header has a steam trap upstream of the EFW pump turbine isolation valve, which is a GDC 57 boundary valve. Therefore, the upstream CIV for this steam trap is subject to GDC 57. The manual isolation valves for this steam trap (which include the upstream CIV) are normally open during power operation. Keeping the EFW steam trap isolation valves closed during operation potentially threatens the operability of the steam-driven EFW pump. It is noted that the EFW steam trap for the ''A'' EFW pump turbine is located downstream of the turbine isolation valve. The ADV associated with the ''A'' main steam header has a drain steam trap whose isolation valves are also maintained open during power operation. The upstream CIV for this steam trap is also subject to GDC 57. Keeping the ADV drain steam trap isolation valves closed during operation could cause the potential for waterhammer when an ADV line is opened and damage the piping associated with the ADV, due to condensate buildup. Since these applicable CIVs (associated with the EFW and ADV drain steam traps) are manual CIVs and do not have remote closure capability, GDC 57 requires that they be locked closed. Therefore, the licensee requests an exemption from the requirements of GDC 57 to keep these CIVs open during operation.

Operating with the ANO–2 EFW steam trap and ADV drain steam trap CIVs open results in the secondary system pressure boundary inside containment providing the only barrier against the release of radioactivity to the environment through the steam trap piping. However, the licensee has evaluated the effects of these valves being open during power operation (provided below) and has shown this to have no impact on the consequences of any of the events evaluated in the Safety Analysis Report (SAR). Operating with the EFW steam trap CIVs closed and the ADV drain steam trap CIV closed could compromise the operability of the EFW pump turbine and damage the piping associated with the ADV, due to condensate buildup.

Of the 36 events listed in Chapter 15 of the ANO–2 SAR, only ten involve a radiation dose evaluation. The waste gas decay tank rupture and the fuel handling accident need not be evaluated since they cannot physically involve the EFW and ADV steam trap CIVs. Additionally, the malfunction of the turbine gland sealing system can also be eliminated from evaluation since it is bounded by the turbine trip event, which will be discussed below. The remaining seven events are turbine trip, loss of alternating current (AC) power, excess heat removal, main steam/feed line break, loss of reactor coolant system (RCS) forced flow, loss-of-coolant accident (LOCA), and steam generator tube rupture.

For the turbine trip, loss of AC power, excess heat removal, and main steam/feed line break, no post-event RCS activity is involved in the dose estimate since the RCS integrity is not compromised. Having the EFW and ADV steam trap CIVs open would not impact this event since the containment isolation function is not a factor.

For the loss of RCS forced flow, only the reactor coolant pump shaft seizure has a dose estimate, and that dose estimate is based on a normal cool down to shutdown cooling with no secondary isolations assumed. Therefore, having

the EFW and ADV steam trap CIVs open would not impact this event.

For the LOCA, activity in the secondary system is not considered in the dose estimate because of the massive radioisotope inventories that are conservatively and deterministically considered to be in the containment building. No credit for the closure of the MSIVs or other secondary system flowpaths is taken for this analysis unless a passive failure of the secondary system pressure boundary inside containment is assumed. Since the design and quality of the secondary system process and drain lines inside containment is equivalent to that of the containment liner, a passive failure of this piping is not considered in the SAR analysis. Also, pertinent regulations (*e.g.,* 10 CFR part 50, appendix J, Option A, section II.H.4) assume that the closed system inside containment remains intact during the accident. Therefore, having the EFW and ADV steam trap CIVs open would not impact this event.

For the steam generator tube rupture, no containment isolation signal or main steam isolation signal would be generated. Manual isolation of the affected steam generator is assumed to occur 60 minutes following a steam generator tube rupture, followed by cool down to shutdown cooling conditions using the unaffected steam generator. The isolation of the affected steam generator includes the local manual isolation of the EFW and ADV steam traps. Therefore, the fact that they are not equipped to be operated remotely has no effect on analyzed dose consequences.

The staff has evaluated the licensee's analyses and makes the following findings:

(a) Only 7 of the 36 Chapter 15 events need to be evaluated, for the reasons given above.

(b) For the turbine trip, loss of AC power, excess heat removal, and main steam/feed line break, the containment isolation function is not a factor, so the position of the subject steam trap CIVs has no effect on the consequences of the accidents.

(c) The loss of RCS forced flow event analysis does not assume secondary system isolation (which includes the subject steam trap CIVs), so the position of these CIVs has no effect on the analyzed dose consequences.

(d) For the LOCA, secondary system isolation is not assumed in the analyses, and pre-existing secondary system radioactivity is insignificant compared to the analyzed releases, so the position of the subject steam trap CIVs has no effect on the analyzed dose consequences.

(e) For the steam generator tube rupture event, no containment isolation signal or main steam isolation signal would be generated. The analysis assumes the local manual isolation of the subject steam trap CIVs. Therefore, the licensee's proposal, to allow the subject steam trap CIVs to remain open during power operation, with only local manual closure capability, is consistent with the event analysis.

Based on the above discussion, leaving the EFW and ADV steam trap CIVs open during power operation would have no impact on the consequences of any of the accidents evaluated in the SAR.

Alternate Solutions

The licensee has stated that operating with the EFW steam trap CIV closed and the ADV drain steam trap CIV closed could compromise the operability of the EFW pump turbine and damage the piping associated with the ADV, due to condensate buildup. However, in its October 30, 2003, letter, the licensee did not explicitly address another possible alternative to the requested exemption; that being, to bring the CIVs (associated with EFW and ADV drain steam traps) into compliance with GDC 57 by installing remote manual operators on the CIVs. The CIVs could then be left open during plant operation. In its supplemental letter dated July 1, 2004, the licensee stated again that leaving the CIVs open during power operation would have no impact on the consequences of any of the accidents evaluated in the SAR. Considering this, the licensee believes that any potential benefit derived from implementing a modification to install remote manual operators on the subject CIVs would not be commensurate with the cost and resource burden associated with preparing and implementing the modification. Therefore, the licensee believes that the most expeditious, efficient, and cost effective resolution of the nonconformance with GDC 57 is the subject exemption request.

Although the staff considers there to be significant safety value to the dual, redundant barrier concept of containment isolation, the staff finds that, in this case, given the SAR analyses and the assumption of an intact closed system inside containment during a LOCA, it is not necessary to require compliance with the explicit requirements of the regulation in order to achieve the underlying purpose of the regulation, which is to ensure that the primary containment serves as an essentially leak-tight barrier against the uncontrolled release of radioactivity to the environment, because leaving the EFW and ADV steam trap CIVs open during power operation would have no impact on the consequences of any of the accidents evaluated in the SAR. Thus, the staff finds that the safety benefits of the modification are not commensurate with the cost.

Summary

The staff finds that, based on the above, it is not necessary, in this case, for the subject CIVs to be locked closed, automatic, or remote manual, as required by GDC 57, in order to achieve the underlying purpose of GDC 57. Therefore, pursant to 10 CFR 50.12(a)(2), the staff concludes that the operation of ANO–2 with the subject CIVs open is acceptable, and that the requested exemption from GDC 57 is justified.

4.0 Conclusion

Accordingly, the Commission has determined that, pursuant to 10 CFR 50.12(a), the exemption is authorized by law, will not present an undue risk to the public health and safety, and is consistent with the common defense and security. Also, special circumstances are present. Therefore, the Commission hereby grants Entergy Operations, Inc. an exemption from the requirements of 10 CFR part 50, appendix A, GDC 57, to allow ANO–2 to operate with the applicable manual upstream CIV associated with the EFW system steam trap and the applicable manual upstream CIV associated with the ADV drain steam trap in the open position.

Pursuant to 10 CFR 51.32, the Commission has determined that the granting of this exemption will not have a significant effect on the quality of the human environment (70 FR 19106).

This exemption is effective upon issuance.

Dated in Rockville, Maryland, this 15th day of April 2005.

For the Nuclear Regulatory Commission.

Ledyard B. Marsh,

Director, Division of Licensing Project Management, Office of Nuclear Reactor Regulation.

[FR Doc. E5–1968 Filed 4–25–05; 8:45 am]

BILLING CODE 7590–01–P

NUCLEAR REGULATORY COMMISSION

[Docket No. 50–368]

Entergy Operations, Inc., Arkansas Nuclear One, Unit 2; Notice of Availability of the Final Supplement 19 to the Generic Environmental Impact Statement for the License Renewal of Arkansas Nuclear One, Unit 2

Notice is hereby given that the U.S. Nuclear Regulatory Commission (Commission) has published a final plant-specific supplement to the Generic Environmental Impact Statement (GEIS), NUREG–1437, regarding the renewal of operating license NPF–6 for an additional 20 years of operation at Arkansas Nuclear One, Unit 2 (ANO–2). ANO–2 is located in Pope County, Arkansas, approximately 6 miles west-northwest of Russellville, Arkansas. Possible alternatives to the proposed action (license renewal) include no action and reasonable alternative energy sources.

In Section 9.3 of the final Supplement 19 to the GEIS, the staff concludes that based on: (1) The analysis and findings in the GEIS; (2) the environmental report submitted by Entergy; (3) consultation with Federal, State, and local agencies; (4) the staff's own independent review; and (5) the staff's consideration of public comments received during the environmental review, the staff recommends that the Commission determine that the adverse environmental impacts of license renewal for ANO–2, are not so great that preserving the option of license renewal for energy-planning decisionmakers would be unreasonable.

The final Supplement 19 to the GEIS is available for public inspection in the NRC Public Document Room (PDR) located at One White Flint North, 11555 Rockville Pike, Rockville, Maryland, or from the Publicly Available Records (PARS) component of NRC's Agencywide Documents Access and Management System (ADAMS). ADAMS is accessible from the NRC Web site at *http://www.nrc.gov/reading-rm/adams.html* (the Public Electronic Reading Room). Persons who do not have access to ADAMS, or who encounter problems in accessing the documents located in ADAMS, should contact the PDR reference staff at 1–800–397–4209, 301–415–4737, or by e-mail to *pdr@nrc.gov.* In addition, the Ross Pendergraft Library at Arkansas Tech University, 305 West Q Street, Russellville, Arkansas 72801, has agreed to make the final plant-specific supplement to the GEIS available for public inspection.

FOR FURTHER INFORMATION CONTACT: Mr. Thomas Kenyon, License Renewal and Environmental Impacts Program, Division of Regulatory Improvement Programs, U.S. Nuclear Regulatory Commission, Washington, DC 20555. Mr. Kenyon may be contacted at 301–415–1120 or *TJK@nrc.gov.*

Dated in Rockville, Maryland, this 7th day of April, 2005.

For the Nuclear Regulatory Commission.

Pao-Tsin Kuo,

Program Director, License Renewal and Environmental Impacts Program, Division of Regulatory Improvement Programs, Office of Nuclear Reactor Regulation.

[FR Doc. E5–1967 Filed 4–25–05; 8:45 am]

BILLING CODE 7590–01–P

NUCLEAR REGULATORY COMMISSION

Biweekly Notice; Applications and Amendments to Facility Operating Licenses Involving No Significant Hazards Considerations

I. Background

Pursuant to section 189a. (2) of the Atomic Energy Act of 1954, as amended (the Act), the U.S. Nuclear Regulatory Commission (the Commission or NRC staff) is publishing this regular biweekly notice. The Act requires the Commission publish notice of any amendments issued, or proposed to be issued and grants the Commission the authority to issue and make immediately effective any amendment to an operating license upon a determination by the Commission that such amendment involves no significant hazards consideration, notwithstanding the pendency before the Commission of a request for a hearing from any person.

This biweekly notice includes all notices of amendments issued, or proposed to be issued from April 1, 2005, through April 14, 2005. The last biweekly notice was published on April 12, 2005 (70 FR 19110).

Notice of Consideration of Issuance of Amendments to Facility Operating Licenses, Proposed No Significant Hazards Consideration Determination, and Opportunity for a Hearing

The Commission has made a proposed determination that the following amendment requests involve no significant hazards consideration. Under the Commission's regulations in 10 CFR 50.92, this means that operation of the facility in accordance with the proposed amendment would not (1) involve a significant increase in the probability or consequences of an accident previously evaluated; or (2) create the possibility of a new or different kind of accident from any accident previously evaluated; or (3) involve a significant reduction in a margin of safety. The basis for this proposed determination for each amendment request is shown below.

The Commission is seeking public comments on this proposed determination. Any comments received within 30 days after the date of publication of this notice will be considered in making any final determination. Within 60 days after the date of publication of this notice, the licensee may file a request for a hearing with respect to issuance of the amendment to the subject facility operating license and any person whose interest may be affected by this proceeding and who wishes to participate as a party in the proceeding must file a written request for a hearing and a petition for leave to intervene.

Normally, the Commission will not issue the amendment until the expiration of 60 days after the date of publication of this notice. The Commission may issue the license amendment before expiration of the 60-day period provided that its final determination is that the amendment involves no significant hazards consideration. In addition, the Commission may issue the amendment prior to the expiration of the 30-day comment period should circumstances change during the 30-day comment period such that failure to act in a timely way would result, for example in derating or shutdown of the facility. Should the Commission take action prior to the expiration of either the comment period or the notice period, it will publish in the **Federal Register** a notice of issuance. Should the Commission make a final No Significant Hazards Consideration Determination, any hearing will take place after issuance. The Commission expects that the need to take this action will occur very infrequently.

Written comments may be submitted by mail to the Chief, Rules and Directives Branch, Division of Administrative Services, Office of Administration, U.S. Nuclear Regulatory Commission, Washington, DC 20555–0001, and should cite the publication date and page number of this **Federal Register** notice. Written comments may also be delivered to Room 6D22, Two White Flint North, 11545 Rockville Pike, Rockville, Maryland, from 7:30 a.m. to 4:15 p.m. Federal workdays. Copies of written comments received may be examined at the Commission's Public Document Room (PDR), located at One White Flint North, Public File

Area O1F21, 11555 Rockville Pike (first floor), Rockville, Maryland. The filing of requests for a hearing and petitions for leave to intervene is discussed below.

Within 60 days after the date of publication of this notice, the licensee may file a request for a hearing with respect to issuance of the amendment to the subject facility operating license and any person whose interest may be affected by this proceeding and who wishes to participate as a party in the proceeding must file a written request for a hearing and a petition for leave to intervene. Requests for a hearing and a petition for leave to intervene shall be filed in accordance with the Commission's ''Rules of Practice for Domestic Licensing Proceedings'' in 10 CFR Part 2. Interested persons should consult a current copy of 10 CFR 2.309, which is available at the Commission's PDR, located at One White Flint North, Public File Area 01F21, 11555 Rockville Pike (first floor), Rockville, Maryland. Publicly available records will be accessible from the Agencywide Documents Access and Management System's (ADAMS) Public Electronic Reading Room on the Internet at the NRC Web site, *http://www.nrc.gov/reading-rm/doc-collections/cfr/.* If a request for a hearing or petition for leave to intervene is filed within 60 days, the Commission or a presiding officer designated by the Commission or by the Chief Administrative Judge of the Atomic Safety and Licensing Board Panel, will rule on the request and/or petition; and the Secretary or the Chief Administrative Judge of the Atomic Safety and Licensing Board will issue a notice of a hearing or an appropriate order.

As required by 10 CFR 2.309, a petition for leave to intervene shall set forth with particularity the interest of the petitioner in the proceeding, and how that interest may be affected by the results of the proceeding. The petition should specifically explain the reasons why intervention should be permitted with particular reference to the following general requirements: (1) The name, address, and telephone number of the requestor or petitioner; (2) the nature of the requestor's/petitioner's right under the Act to be made a party to the proceeding; (3) the nature and extent of the requestor's/petitioner's property, financial, or other interest in the proceeding; and (4) the possible effect of any decision or order which may be entered in the proceeding on the requestor's/petitioner's interest. The petition must also set forth the specific contentions which the petitioner/requestor seeks to have litigated at the proceeding.

Each contention must consist of a specific statement of the issue of law or fact to be raised or controverted. In addition, the petitioner/requestor shall provide a brief explanation of the bases for the contention and a concise statement of the alleged facts or expert opinion which support the contention and on which the petitioner/requestor intends to rely in proving the contention at the hearing. The petitioner/requestor must also provide references to those specific sources and documents of which the petitioner is aware and on which the petitioner/requestor intends to rely to establish those facts or expert opinion. The petition must include sufficient information to show that a genuine dispute exists with the applicant on a material issue of law or fact. Contentions shall be limited to matters within the scope of the amendment under consideration. The contention must be one which, if proven, would entitle the petitioner/requestor to relief. A petitioner/requestor who fails to satisfy these requirements with respect to at least one contention will not be permitted to participate as a party.

Those permitted to intervene become parties to the proceeding, subject to any limitations in the order granting leave to intervene, and have the opportunity to participate fully in the conduct of the hearing.

If a hearing is requested, and the Commission has not made a final determination on the issue of no significant hazards consideration, the Commission will make a final determination on the issue of no significant hazards consideration. The final determination will serve to decide when the hearing is held. If the final determination is that the amendment request involves no significant hazards consideration, the Commission may issue the amendment and make it immediately effective, notwithstanding the request for a hearing. Any hearing held would take place after issuance of the amendment. If the final determination is that the amendment request involves a significant hazards consideration, any hearing held would take place before the issuance of any amendment.

A request for a hearing or a petition for leave to intervene must be filed by: (1) First class mail addressed to the Office of the Secretary of the Commission, U.S. Nuclear Regulatory Commission, Washington, DC 20555–0001, Attention: Rulemaking and Adjudications Staff; (2) courier, express mail, and expedited delivery services: Office of the Secretary, Sixteenth Floor, One White Flint North, 11555 Rockville Pike, Rockville, Maryland, 20852, Attention: Rulemaking and Adjudications Staff; (3) E-mail addressed to the Office of the Secretary, U.S. Nuclear Regulatory Commission, *HearingDocket@nrc.gov;* or (4) facsimile transmission addressed to the Office of the Secretary, U.S. Nuclear Regulatory Commission, Washington, DC, Attention: Rulemakings and Adjudications Staff at (301) 415–1101, verification number is (301) 415–1966. A copy of the request for hearing and petition for leave to intervene should also be sent to the Office of the General Counsel, U.S. Nuclear Regulatory Commission, Washington, DC 20555–0001, and it is requested that copies be transmitted either by means of facsimile transmission to (301) 415–3725 or by e-mail to *OGCMailCenter@nrc.gov.* A copy of the request for hearing and petition for leave to intervene should also be sent to the attorney for the licensee.

Nontimely requests and/or petitions and contentions will not be entertained absent a determination by the Commission or the presiding officer of the Atomic Safety and Licensing Board that the petition, request and/or the contentions should be granted based on a balancing of the factors specified in 10 CFR 2.309(a)(1)(i)–(viii).

For further details with respect to this action, see the application for amendment which is available for public inspection at the Commission's PDR, located at One White Flint North, Public File Area 01F21, 11555 Rockville Pike (first floor), Rockville, Maryland. Publicly available records will be accessible from the ADAMS Public Electronic Reading Room on the Internet at the NRC Web site, *http://www.nrc.gov/reading-rm/adams.html.* If you do not have access to ADAMS or if there are problems in accessing the documents located in ADAMS, contact the PDR Reference staff at 1 (800) 397–4209, (301) 415–4737 or by e-mail to *pdr@nrc.gov.*

AmerGen Energy Company, LLC, Docket No. 50–461, Clinton Power Station, Unit 1, DeWitt County, Illinois

Date of amendment request: February 25, 2005.

Description of amendment request: The proposed change would delete Section 2.G of the Clinton's Facility Operating License (FOL), NPF–62, which requires AmerGen Energy Company, LLC, to report violations of the requirements contained in Section 2.C of this license. The proposed change will reduce unnecessary regulatory burden and will allow AmerGen to take full advantage of the revisions to Title 10, Code of Federal Regulations (10

CFR), Section 50.72, ''Immediate notification requirements for operating nuclear power reactors,'' and 10 CFR 50.73, ''Licensee event report system.''

Basis for proposed no significant hazards consideration determination: As required by 10 CFR 50.91(a), the licensee has provided its analysis of the issue of no significant hazards consideration, which is presented below:

1. Does the proposed change involve a significant increase in the probability or consequences of an accident previously evaluated?

The proposed change involves an administrative change only. The proposed change does not involve the modification of any plant equipment or affect plant operation. The proposed change will have no impact on any safety related structures, systems or components. The reporting requirement section of the FOL is not required because the requirements are either adequately addressed by 10 CFR 50.72 and 10 CFR 50.73, or other regulatory requirements, or are not required based on the nature of the Condition.

Therefore, the proposed change does not involve a significant increase in the probability or consequences of an accident previously evaluated.

2. Does the proposed change create the possibility of a new or different kind of accident from any accident previously evaluated?

The proposed change has no impact on the design, function or operation of any plant structure, system or component. The proposed change is administrative in nature and does not affect plant equipment or accident analyses. The reporting requirement section of the FOL is not required because the requirements are either adequately addressed by 10 CFR 50.72 and 10 CFR 50.73, or other regulatory requirements, or are not required based on the nature of the Condition.

Therefore, the proposed change will not create the possibility of a new or different kind of accident from any accident previously evaluated.

3. Does the proposed change involve a significant reduction in a margin of safety?

The proposed change is administrative in nature, does not negate any existing requirement, and does not adversely affect existing plant safety margins or the reliability of the equipment assumed to operate in the safety analysis. As such, there is no change being made to safety analysis assumptions, safety limits or safety system settings that would adversely affect plant safety as a result of the proposed change. Margins of safety are unaffected by deletion of the reporting requirement that is adequately addressed elsewhere.

Therefore, the proposed change does not involve a significant reduction in a margin of safety.

The NRC staff has reviewed the licensee's analysis and, based on this review, it appears that the three standards of 10 CFR 50.92(c) are satisfied. Therefore, the NRC staff proposes to determine that the requested amendment involves no significant hazards consideration.

Attorney for licensee: Mr. Thomas S. O'Neill, Associate General Counsel, Exelon Generation Company, LLC, 4300 Winfield Road, Warrenville, IL 60555.

NRC Section Chief: Gene Y. Suh.

AmerGen Energy Company, LLC, Docket No. 50–461, Clinton Power Station, Unit 1, DeWitt County, Illinois

Date of amendment request: March 25, 2005.

Description of amendment request: The proposed change would revise Technical Specification Surveillance Requirement (SR) 3.6.1.3.8 to add a note excluding leakage through primary containment penetrations 1MC–101 and 1MC–102 from the secondary containment bypass leakage total specified in the SR.

Implementation of this proposed change will provide operational flexibility by allowing Clinton Power Station (CPS) to utilize the additional margin in the regulatory dose limit analysis that supports the implementation of the alternative source term.

Basis for proposed no significant hazards consideration determination: As required by 10 CFR 50.91(a), the licensee has provided its analysis of the issue of no significant hazards consideration, which is presented below:

1. Does the proposed change involve a significant increase in the probability or consequences of an accident previously evaluated?

Response: No.

The proposed amendment adds a note excluding the leakage through the primary containment purge lines from the secondary containment bypass leakage based on separate analysis of these paths using the assumptions in the alternative source term (AST) revision to the loss of coolant accident (LOCA) analysis.

The proposed change does not require modification to the facility. The proposed change in secondary containment bypass leakage does not affect the operation of any facility equipment, the interface between facility systems, or the reliability of any equipment. In addition, secondary containment bypass leakage does not constitute an initiator of any previously evaluated accidents. Therefore, the proposed amendment does not involve a significant increase in the probability of an accident previously evaluated.

The radiological consequences of the LOCA analysis using the primary containment purge line leakage as separate from the secondary containment bypass leakage, has been evaluated as part of the application of AST assumptions. The results conclude that the radiological consequences remain within applicable regulatory limits.

Therefore, the proposed change does not involve a significant increase in the probability or consequences of an accident previously evaluated.

2. Does the proposed amendment create the possibility of a new or different kind of accident from any accident previously evaluated?

Response: No.

The proposed change does not affect the design, functional performance or operation of the facility. No new equipment is being introduced and installed equipment is not being operated in a new or different manner. Similarly, the proposed change does not affect the design or operation of any structures, systems or components involved in the mitigation of any accidents, nor does it affect the design or operation of any component in the facility such that new equipment failure modes are created. There are no set points at which protective or mitigative actions are initiated that are affected by this proposed action. No change is being made to procedures relied upon to respond to an off-normal event.

As such the proposed amendment will not create the possibility of a new or different kind of accident from any accident previously evaluated.

3. Does the proposed amendment involve a significant reduction in a margin of safety?

Response: No.

Margins of safety are established in the design of components, the configuration of components to meet certain performance parameters, and in the establishment of set points to initiate alarms or actions. The proposed change adds a note excluding the leakage through the primary containment purge lines from the secondary containment bypass leakage based on separate analysis of these paths using the assumptions in the AST revision to the LOCA analysis. There is no change in the design of the affected systems, no alteration of the set points at which alarms or actions are initiated, and no change in plant configuration from original design.

The margin of safety is considered to be that provided by meeting the applicable regulatory limits. The AST analysis indicates that the doses following a LOCA remain within the regulatory limits, and therefore, there is not a significant reduction in a margin of safety. The AST analysis confirms the change continues to ensure that the doses at the exclusion area and low population zone boundaries, as well as the control room, are within the corresponding regulatory limits.

Therefore, operation of CPS in accordance with the proposed change will not involve a significant reduction in a margin of safety.

The NRC staff has reviewed the licensee's analysis and, based on this review, it appears that the three standards of 10 CFR 50.92(c) are satisfied. Therefore, the NRC staff proposes to determine that the requested amendment involves no significant hazards consideration.

Attorney for licensee: Mr. Thomas S. O'Neill, Associate General Counsel,

Exelon Generation Company, LLC, 4300 Winfield Road, Warrenville, IL 60555.

NRC Section Chief: Gene Y. Suh.

AmerGen Energy Company, LLC, Docket No. 50–461, Clinton Power Station, Unit 1, DeWitt County, Illinois

Date of amendment request: April 1, 2005.

Description of amendment request: The proposed changes would incorporate into the Technical Specifications (TSs) the Oscillation Power Range Monitor (OPRM) instrumentation that will be declared operable within 30 days after completion of the February 2006 refueling outage. The proposed changes would add TS Section 3.3.1.3, ''Oscillation Power Range Monitor (OPRM) Instrumentation,'' and would revise TS Sections 3.4.1, ''Recirculation Loops Operating,'' and 5.6.5, ''Core Operating Limits Report (COLR).'' In addition, the changes would insert a new TS section for the OPRM instrumentation, delete the current thermal-hydraulic instability administrative requirements, and add the appropriate references for the OPRM trip set points and methodology. Clinton Power Station (CPS) will activate the automatic reactor protection system (*i.e.*, scram) outputs of the OPRM instrumentation upon implementation of these proposed TS changes.

Basis for proposed no significant hazards consideration determination: As required by 10 CFR 50.91(a), the licensee has provided its analysis of the issue of no significant hazards consideration, which is presented below:

1. Does the proposed change involve a significant increase in the probability or consequences of an accident previously evaluated?

Response: No.

The proposed changes specify limiting conditions for operation, required actions and surveillance requirements for the OPRM system, and allows operation in regions of the power to flow map currently restricted by the requirements of the Interim Corrective Actions (ICAs) and certain limiting conditions of operation of TS Section 3.4.1, ''Recirculation Loops Operating.'' The restrictions of the ICAs and TS Section 3.4.1 were imposed to ensure adequate capability to detect and suppress conditions consistent with the onset of thermal-hydraulic oscillations that may develop into a thermal-hydraulic instability event. A thermal-hydraulic instability event has the potential to challenge the Minimum Critical Power Ratio (MCPR) safety limit. The OPRM system can automatically detect and suppress conditions necessary for thermal-hydraulic instability. With the activation of the OPRM system, the restrictions of the ICAs and TS Section 3.4.1 will no longer be required.

This proposed change has no impact on any of the existing neutron monitoring functions. When the OPRM is operable with operating limits as specified in the Core Operating Limits Report (COLR), the OPRM can automatically detect the imminent onset of local power oscillations and generate a trip signal. Actuation of a Reactor Protection System (RPS) trip (*i.e.*, scram) will suppress conditions necessary for thermal-hydraulic instability and decrease the probability of a thermal-hydraulic instability event. In the event the trip capability of the OPRM is not maintained, the proposed changes limit the period of time before an alternate method to detect and suppress thermal-hydraulic oscillations is required. CPS intends to utilize the ICAs as the alternative method for ensuring thermal-hydraulic oscillations do not occur. Since the duration of this period of time is limited, the increase in the probability of a thermal-hydraulic instability event is not significant.

Activation of the OPRM scram function will replace the current methods that require operators to insert an immediate manual reactor scram in certain reactor operating regions where thermal hydraulic instabilities could potentially occur. While these regions will continue to be avoided during normal operation, certain transients, such as a reduction in reactor recirculation flow, could place the reactor in these regions. During these transient conditions, with the OPRM instrumentation scram function activated; an immediate manual scram will no longer be required. This may potentially cause a marginal increase in the probability of occurrence of an instability event. This potential increase in probability is acceptable because the OPRM function will automatically detect the instability condition and initiate a reactor scram before the Minimum Critical Power Ratio (MCPR) Safety Limit is reached. Consequences of the potential instability event are reduced because of the more reliable automatic detection and suppression of an instability event, and the elimination of dependence on the manual operator actions. Operators monitor for indications of thermal hydraulic instability when the reactor is operating in regions of potential instability as a backup to the OPRM instrumentation.

Therefore, the proposed changes do not involve a significant increase in the probability or consequences of an accident previously evaluated.

2. Does the proposed change create the possibility of a new or different kind of accident from any accident previously evaluated?

Response: No.

The proposed changes replace procedural actions that were established to avoid operating conditions where reactor instabilities might occur with an NRC approved automatic detect and suppress function (*i.e.*, OPRM).

Potential failures in the OPRM trip function could result in either failure to take the required mitigating action or an unintended reactor scram. These are the same potential effects of failure of the operator to take the correct appropriate action under the current procedural actions. The effects of failure of the OPRM equipment are limited to reduced or failed mitigation, but such failure cannot cause an instability event or other type of accident.

The OPRM system uses input signals shared with the Average Power Range Monitor (APRM) system and rod block functions to monitor core conditions and generate a Reactor Protection System (RPS) trip when required. Quality requirements for software design, testing, implementation and module self-testing of the OPRM system provide assurance that no new equipment malfunctions due to software errors are created. The design of the OPRM system also ensures that neither operation nor malfunction of the OPRM system will adversely impact the operation of the other systems and no accident or equipment malfunction of these other systems could cause the OPRM system to malfunction or cause a different kind of accident. No new failure modes of either the new OPRM equipment or of the existing APRM equipment have been introduced.

Operation in regions currently restricted by the ICAs and TS Section 3.4.1 is within the nominal operating domain and ranges of plant systems and components for which postulated equipment and accidents have been evaluated. Therefore, operation within these regions does not create the possibility of a new or different kind of accident from any previously evaluated.

These proposed changes which specify limiting conditions for operations, required actions and surveillance requirements of the OPRM system and allow operation in certain regions of the power-to-flow map do not create the possibility of a new or different kind of accident from any accident previously evaluated.

3. Does the proposed change involve a significant reduction in a margin of safety?

Response: No.

The OPRM system monitors small groups of Local Power Range Monitor (LPRM) signals for indication of local variations of core power consistent with thermal-hydraulic oscillations and generates an RPS trip when conditions consistent with the onset of oscillations are detected. An unmitigated thermal-hydraulic instability event has the potential to result in a challenge to the MCPR safety limit. The OPRM system provides the capability to automatically detect and suppress conditions that might result in a thermal-hydraulic instability event and thereby maintains the margin of safety by providing automatic protection for the MCPR safety limit while reducing the burden on the control room operators significantly. The OPRM trip provides a trip output of the same type as currently used for the APRM. Its failure modes and types are similar to those for the present APRM output. Since the MCPR Safety Limit will not be exceeded as a result of an instability event following implementation of the OPRM trip function, it is concluded that the proposed change does not reduce the margin of safety.

Operation in regions currently restricted by the requirements of the ICAs and TS Section 3.4.1 is within the nominal operating domain assumed for identifying the range of initial

conditions considered in the analysis of anticipated operational occurrences and postulated accidents. Therefore, operation in these regions does not involve a significant reduction in the margin of safety.

The proposed changes, which specify limiting conditions for operations, required actions and surveillance requirements of the OPRIVI system and allow operation in certain regions of the power to flow map, do not involve a significant reduction in a margin of safety.

The NRC staff has reviewed the licensee's analysis and, based on this review, it appears that the three standards of 10 CFR 50.92(c) are satisfied. Therefore, the NRC staff proposes to determine that the requested amendment involves no significant hazards consideration.

Attorney for licensee: Mr. Thomas S. O'Neill, Associate General Counsel, Exelon Generation Company, LLC, 4300 Winfield Road, Warrenville, IL 60555.

NRC Section Chief: Gene Y. Suh.

AmerGen Energy Company, LLC, Docket No. 50–219, Oyster Creek Nuclear Generating Station, Ocean County, New Jersey

Date of amendment request: February 25, 2005.

Description of amendment request: The proposed change would delete Section 2.E of the Oyster Creek's Facility Operating License (FOL), DPR–16, which requires AmerGen Energy Company, LLC, to report violations of the requirements contained in Section 2.C of this license. The proposed change will reduce unnecessary regulatory burden and will allow AmerGen to take full advantage of the revisions to Title 10, Code of Federal Regulations (10 CFR), Section 50.72, ''Immediate notification requirements for operating nuclear power reactors,'' and 10 CFR 50.73, ''Licensee event report system.''

Basis for proposed no significant hazards consideration determination: As required by 10 CFR 50.91(a), the licensee has provided its analysis of the issue of no significant hazards consideration, which is presented below:

1. Does the proposed change involve a significant increase in the probability or consequences of an accident previously evaluated?

Response: No.

The proposed change involves an administrative change only. The proposed change does not involve the modification of any plant equipment or affect plant operation. The proposed change will have no impact on any safety related structures, systems or components. The reporting requirement section of the FOL is not required because the requirements are either adequately addressed by 10 CFR 50.72 and 10 CFR 50.73, or other regulatory requirements, or are not required based on the nature of the Condition.

Therefore, the proposed change does not involve a significant increase in the probability or consequences of an accident previously evaluated.

2. Does the proposed change create the possibility of a new or different kind of accident from any accident previously evaluated?

Response: No.

The proposed change has no impact on the design, function or operation of any plant structure, system or component. The proposed change is administrative in nature and does not affect plant equipment or accident analyses. The reporting requirement section of the FOL is not required because the requirements are either adequately addressed by 10 CFR 50.72 and 10 CFR 50.73, or other regulatory requirements, or are not required based on the nature of the Condition.

Therefore, the proposed change will not create the possibility of a new or different kind of accident from any accident previously evaluated.

3. Does the proposed change involve a significant reduction in a margin of safety?

Response: No.

The proposed change is administrative in nature, does not negate any existing requirement, and does not adversely affect existing plant safety margins or the reliability of the equipment assumed to operate in the safety analysis. As such, there is no change being made to safety analysis assumptions, safety limits or safety system settings that would adversely affect plant safety as a result of the proposed change. Margins of safety are unaffected by deletion of the reporting requirement that is adequately addressed elsewhere.

Therefore, the proposed change does not involve a significant reduction in a margin of safety.

The NRC staff has reviewed the licensee's analysis and, based on this review, it appears that the three standards of 10 CFR 50.92(c) are satisfied. Therefore, the NRC staff proposes to determine that the requested amendment involves no significant hazards consideration.

Attorney for licensee: Mr. Thomas S. O'Neill, Associate General Counsel, Exelon Generation Company, LLC, 4300 Winfield Road, Warrenville, IL 60555.

NRC Section Chief: Richard J. Laufer.

Detroit Edison Company, Docket No. 50–341, Fermi 2, Monroe County, Michigan

Date of amendment request: March 17, 2005.

Description of amendment request: The proposed amendment would revise Technical Specification 3.4.10, ''Reactor Coolant System (RCS) Pressure and Temperature (P/T) Limits,'' to replace the combination figure with separate P/T limit figures for each one of the three categories of operation: hydrostatic pressure test [Curve A], non-nuclear heatup and cooldown [Curve B], and nuclear (core critical) operation [Curve C]. The new curves also provide composite limits for all reactor pressure vessel (RPV) regions including core beltline region. RPV bottom head individual limit curves are superimposed on Curves A and B. In addition, two sets of curves are calculated; one for 32 effective full power years (EFPY) which represents the end of the current 40-year plant license and the other one is for 24 EFPY which has been selected as an intermediate point between the current EFPY and 32 EFPY.

Basis for proposed no significant hazards consideration determination: As required by 10 CFR 50.91(a), the licensee has provided its analysis of the issue of no significant hazards consideration, which is presented below:

1. The proposed change does not involve a significant increase in the probability or consequences of an accident previously evaluated.

The revised P/T curves are based on the 1998 Edition of the American Society of Mechanical Engineers (ASME) Boiler and Pressure Vessel (B&PV) Code, Section XI, including the 2000 Addenda. This edition of the Code has been approved for use in both 10 CFR 50.55a and Regulatory Guide (RG) 1.147. The revised curves are also based on updated fluence calculations performed utilizing NRC-approved methodology consistent with RG 1.190 for calculating Reactor Pressure Vessel (RPV) neutron fluence. Revised fluence calculations are applicable for 24 and for 32 Effective Full Power Years (EFPY). The 32 EFPY represents a conservative exposure level at the end of the current 40-year plant operating license. The proposed change incorporates adjustment of the reference temperature for all beltline material to account for irradiation effects and provide a comparable level of protection as previously evaluated and approved. The adjusted reference temperature calculations were performed in accordance with the requirements of 10 CFR 50 Appendix G using the guidance contained in RG 1.99, Revision 2, to provide operating limits for up to 32 EFPY.

There are no changes being made to the RCS pressure boundary or to RCS material, design or construction standards. The proposed P/T curves define limits that continue to ensure the prevention of nonductile failure of the RCS pressure boundary. The revision of the P/T curves does not alter any assumptions previously made in the radiological consequence evaluations since the integrity of the RCS pressure boundary is unaffected. Therefore, the proposed changes will not significantly increase the probability or consequences of an accident previously evaluated.

2. The proposed change does not create the possibility of a new or different kind of accident from any accident previously evaluated.

The revised P/T curves are based on a later edition and addenda of the ASME Code that incorporates current industry standards for the curves. The revised curves are also based on an RPV fluence that has been recalculated in accordance with the methodology of RG 1.190. The proposed change does not involve a modification to plant structures, systems or components. There is no effect on the function of any plant system, and no newly introduced system interactions. The proposed change does not create new failure modes or cause any systems, structures or components to be operated beyond their design bases. Therefore, the proposed change does not create the possibility of a new or different kind of accident from any previously evaluated.

3. The proposed change does not involve a significant reduction in the margin of safety.

The proposed P/T curves define the limits of operation to prevent nonductile failure of the RPV upper vessel, bottom head and beltline region. The new curves conform to the guidance contained in RG 1. 190, ''Calculational and Dosimetry Methods for Determining Pressure Vessel Neutron Fluence,'' and RG 1.99, Revision 2, ''Radiation Embrittlement of Reactor Vessel Materials,'' and maintain the safety margins specified in 10 CFR 50 Appendix G. Therefore, the proposed change does not involve a significant reduction in a margin of safety.

The NRC staff has reviewed the licensee's analysis and, based on this review, it appears that the three standards of 10 CFR 50.92(c) are satisfied. Therefore, the NRC staff proposes to determine that the amendment request involves no significant hazards consideration.

Attorney for licensee: David G. Pettinari, Legal Department, 688 WCB, Detroit Edison Company, 2000 2nd Avenue, Detroit, Michigan 48226–1279

NRC Section Chief: L. Raghavan.

Detroit Edison Company, Docket No. 50–341, Fermi 2, Monroe County, Michigan

Date of amendment request: March 17, 2005. This amendment request supercedes, in its entirety, a previous application dated March 19, 2004, published in the **Federal Register** on June 22, 2004 (69 FR 34698).

Description of amendment request: The proposed amendment would revise Technical Specification (TS) 3.3.6.1, ''Primary Containment Isolation Instrumentation,'' to correct a formatting error introduced during conversion to Improved Technical Specifications (ITS) by replacing ''1 per room'' with ''2'' for the required channels per trip system for the reactor water cleanup (RWCU) area ventilation differential temperature—high primary containment isolation instrumentation.

Basis for proposed no significant hazards consideration determination: As required by 10 CFR 50.91(a), the licensee has provided its analysis of the issue of no significant hazards consideration, which is presented below:

1. Does the proposed amendment involve a significant increase in the probability or consequences of an accident previously evaluated?

Response: No.

The proposed change restores the number of Required Channels Per Trip System of the RWCU Area Ventilation Differential Temperature—High isolation, Function 5.c of Table 3.3.6.1–1 of TS 3.3.6.1, Primary Containment Isolation Instrumentation, to its pre-ITS value and adds a note to Table 3.3.6.1–1 of TS 3.3.6.1, Primary Containment Isolation Instrumentation, that ensures, during surveillance testing and normal operation, there will always be at least one instrument monitoring for a small leak in all RWCU locations. No changes in operating practices or physical plant equipment are created as a result of this change. Therefore, the proposed change does not involve a significant increase in the probability or consequences of an accident previously evaluated.

2. Does the proposed change create the possibility of a new or different type of accident from any accident previously evaluated?

Response: No.

The proposed change restores the number of Required Channels Per Trip System of the RWCU Area Ventilation Differential Temperature—High isolation, Function 5.c of Table 3.3.6.1–1 of TS 3.3.6.1, Primary Containment Isolation Instrumentation, to its pre-ITS value and adds a note to Table 3.3.6.1–1 of TS 3.3.6.1, Primary Containment Isolation Instrumentation, that ensures, during surveillance testing and normal operation, there will always be at least one instrument monitoring for a small leak in all RWCU locations. No physical change in plant equipment will result from this proposed change. Therefore, the proposed change does not create the possibility of a new or different type of accident from any previously evaluated.

3. Does the proposed change involve a significant reduction in a margin of safety?

Response: No.

The proposed change restores the number of Required Channels Per Trip System of the RWCU Area Ventilation Differential Temperature—High isolation, Function 5.c of Table 3.3.6.1–1 of TS 3.3.6.1, Primary Containment Isolation Instrumentation, to its pre-ITS value and adds a note to Table 3.3.6.1–1 of TS 3.3.6.1, Primary Containment Isolation Instrumentation, that ensures, during surveillance testing and normal operation, there will always be at least one instrument monitoring for a small leak in all RWCU locations. Therefore, the proposed change does not involve a significant reduction in a margin of safety.

The NRC staff has reviewed the licensee's analysis and, based on this review, it appears that the three standards of 10 CFR 50.92(c) are satisfied. Therefore, the NRC staff proposes to determine that the amendment request involves no significant hazards consideration.

Attorney for licensee: David G. Pettinari, Legal Department, 688 WCB, Detroit Edison Company, 2000 2nd Avenue, Detroit, Michigan 48226–1279

NRC Section Chief: L. Raghavan.

Duke Energy Corporation, et al., Docket Nos. 50–413 and 50–414, Catawba Nuclear Station, Units 1 and 2, York County, South Carolina

Date of amendment request: November 16, 2004.

Description of amendment request: The amendments would revise Technical Specifications (TS) 3.5.2, ''Emergency Core Cooling System,'' TS 3.6.6, ''Containment Spray System,'' TS 3.6.17, ''Containment Valve Injection Water System,'' TS 3.7.5, ''Auxiliary Feedwater System,'' TS 3.7.7, ''Component Cooling Water System,'' TS 3.7.8, ''Nuclear Service Water System (NSWS),'' TS 3.7.10, ''Control Room Area Ventilation System'' TS 3.7.12, ''Auxiliary Building Filtered Ventilation Exhaust System,'' and TS 3.8.1, ''AC Sources-Operating'' for Catawba, Units 1 and 2. The revisions would allow for the ''A'' and ''B'' NSWS headers to be take out of service for up to 14 days each for system upgrades.

Basis for proposed no significant hazards consideration determination: As required by 10 CFR 50.91(a), the licensee has provided its analysis of the issue of no significant hazards consideration, which is presented below:

1. Does operation of the facility in accordance with the proposed amendment involve a significant increase in the probability or consequences of an accident previously evaluated?

Response: No.

The pipe repair project for the [nuclear service water system] NSWS and proposed [technical specifications] TS changes have been evaluated to assess their impact on normal operation of the systems affected and to ensure that the design basis safety functions are preserved. During the pipe repair the other NSWS train will be operable and no major maintenance or testing will be done on the operable train. The operable train will be protected to help ensure it would be available if called upon.

This pipe repair project will enhance the long term structural integrity in the NSWS system. This will ensure that the NSWS headers maintain their integrity to ensure its ability to comply with design basis requirements and increase the overall reliability for many years.

The increased NSWS train unavailability as a result of the implementation of this

amendment does involve a one time increase in the probability or consequences of an accident previously evaluated during the time frame the NSWS headers are out of service for pipe repair. Considering this small time frame for the NSWS train outages with the increased reliability and the decrease in unavailability of the NSWS system in the future because of this project, the overall probability or consequences of an accident previously evaluated will decrease.

Therefore, because this is a temporary and not a permanent change, the time averaged risk increase is acceptable. The increase in the overall reliability of the NSWS along with the decreased unavailability in the future because of the pipe repair project will result in an overall increase in the safety of both Catawba units. Therefore, the consequences of an accident previously evaluated remains unaffected and there will be minimal impact on any accident consequences.

2. Does operation of the facility in accordance with the proposed amendment create the possibility of a new or different kind of accident from any accident previously evaluated?

Response: No.

Implementation of this amendment would not create the possibility of a new or different kind of accident from any accident previously evaluated. The proposed temporary TS changes do not affect the basic operation of the [emergency core cooling system] ECCS, [containment spray system] CSS, [containment valve injection water system] CVIWS, NSWS, [auxiliary feedwater] AFW, [component cooling water] CCW, [control room area ventilation system] [sic] CRAVS, [auxiliary building filtered ventilation exhaust system] ABFVES, or [emergency diesel generator] EDG systems. The only change is increasing the required action time frame from 72 hours (ECCS, CSS, NSWS, AFW, CCW, and EDG) or 168 hours (CVIWS, CRAVS and ABFVES) to 336 hours. The train not undergoing maintenance will be operable and capable of meeting its design requirements. Therefore, only the redundancy of the above systems is affected by the extension of the required action to 336 hours. During the project, contingency measures will be in place to provide additional assurance that the affected systems will be able to complete their design functions.

No new accident causal mechanisms are created as a result of NRC approval of this amendment request. No changes are being made to the plant, which will introduce any new accident causal mechanisms.

3. Does operation of the facility in accordance with the proposed amendment involve a significant reduction in the margin of safety?

Response: No.

Implementation of this amendment would not involve a significant reduction in a margin of safety. Margin of safety is related to the confidence in the ability of the fission product barriers to perform their design functions during and following an accident situation. These barriers include the fuel cladding, the reactor coolant system, and the containment system. The performance of these fission product barriers will not be impacted by implementation of this proposed temporary TS amendment. During the NSWS train outages, the affected systems will still be capable of performing their required functions and contingency measures will be in place to provide additional assurance that the affected systems will be maintained in a condition to be able to complete their design functions. No safety margins will be impacted.

The probabilistic risk analysis conducted for this proposed amendment demonstrated that the [core damage probability] CDP associated with the outage extension is judged to be acceptable for a one-time or rare evolution. Therefore, there is not a significant reduction in the margin of safety.

The NRC staff has reviewed the licensee's analysis and, based on this review, it appears that the three standards of 10 CFR 50.92(c) are satisfied. Therefore, the NRC staff proposes to determine that the amendment request involves no significant hazards consideration.

Attorney for licensee: Ms. Lisa F. Vaughn, Legal Department (PB05E), Duke Energy Corporation, 422 South Church Street, Charlotte, North Carolina 28201–1006.

NRC Section Chief: John A. Nakoski.

Entergy Gulf States, Inc., and Entergy Operations, Inc., Docket No. 50–458, River Bend Station, Unit 1, West Feliciana Parish, Louisiana

Date of amendment request: March 8, 2005.

Description of amendment request: The proposed amendment would enable the licensee to make changes to the Updated Safety Analysis Report (USAR) to reflect the use of the non-single-failure-proof Fuel Building Cask Handling Crane (FBCHC) for dry spent fuel cask component lifting and handling operations.

Basis for proposed no significant hazards consideration determination: As required by 10 CFR 50.91(a), the licensee has provided its analysis of the issue of no significant hazards consideration, which is presented below:

1. Will operation of the facility in accordance with this proposed amendment involve a significant increase in the probability or consequences of an accident previously evaluated?

Response: No.

The proposed amendment introduces no new mode of plant operations and does not affect Structures, Systems, and Components (SSCs) associated with power production, accident mitigation, or safe plant shutdown. The SSCs affected by this proposed amendment are the Fuel Building Cask Handling Crane (FBCHC), the spent fuel storage canister, the spent fuel transfer cask, and the spent fuel inside the storage canister. A hypothetical 30 ft. drop of a loaded spent fuel shipping cask from the FBCHC is part of the River Bend Station (RBS) current licensing basis. With the proposed spent fuel transfer cask design and procedural changes implemented, the FCHC will be used to lift and handle a fuel-loaded spent fuel transfer cask of the same maximum weight and approximately the same dimensions as previously evaluated in the RBS USAR. The proposed amendment involves the use of redundant crane rigging during most lateral moves with a loaded spent fuel transfer cask, which provides temporary single-failure proof design features to provide protection against an uncontrolled lowering of the load or load drop. In those cases where the spent fuel transfer cask is not supported with redundant rigging, certain hypothetical, non-mechanistic load drops have been postulated and evaluated, with due consideration of the use of impact limiters in some locations.

With this amendment, the probability of a loaded spent fuel transfer cask drop is actually less likely than previously evaluated because the capacity of the spent fuel multi-purpose canister [MPC] (68 fuel assemblies) is larger than the capacity of the shipping cask described in the current licensing basis (18 fuel assemblies), which means that fewer casks will be required to be loaded, lifted, and handled for a given population of spent fuel assemblies. The consequences of the hypothetical spent fuel transfer cask load drops on plant SSCs are bounded by those previously evaluated for a shipping cask. That is, there is no significant damage to the Fuel Building structure or any SSCs used for safe plant shutdown. New analyses of hypothetical drops of a loaded transfer cask or canister confirm that there is no release of radioactive material from the storage canister and no unacceptable damage to the fuel, MPC, or transfer cask.

The hypothetical drop of a spent fuel canister lid into an open, fuel-filled canister in the spent fuel pool during fuel loading has also been evaluated. Again, this hypothetical accident is no more likely to occur than previously considered due to the higher capacity of the spent fuel transfer cask over the spent fuel shipping cask (*i.e.*, fewer casks will need to be loaded for a given number of fuel assemblies). The radiological consequences of this event due to the potential damage of spent fuel assemblies in the canister onto which the lid could be dropped have been evaluated. While more total fuel assemblies could potentially be damaged from a spent fuel canister lid drop compared to that assumed for the fuel handling accident described in the RBS current licensing basis, the significantly longer decay time of the spent fuel assemblies in the canister results in a much smaller source term, such that the existing fuel handling accident described in USAR Section 15.7.4 provides a bounding evaluation for the radiological consequences MPC lid drop. There is no rearrangement of the fuel or deformation of the fuel basket in the canister such that a critical geometry is created as a result of an MPC lid drop.

The likelihood of a spent fuel canister lid drop due to the failure of a crane component due to overload is very unlikely because the rated load of the crane (250,000 lbs) is

approximately 16 times the weight of components lifted to install the canister lid.

2. Will operation of the facility in accordance with this proposed amendment create the possibility of a new or different kind of accident from any accident previously evaluated?

Response: No.

The proposed amendment introduces no new mode of plant operations and does not affect SSCs associated with power production, accident mitigation, or safe plant shutdown. The SSCs affected by this proposed amendment are the non-single-failure-proof FBCHC, the spent fuel canister, the spent fuel transfer cask, and the spent fuel inside the canister. The design function of the FBCHC is not changed. The proposed amendment does not create the possibility of a new or different kind of accident due to credible new failure mechanisms, malfunctions, or accident initiators. The proposed amendment creates a new initiator of two accidents previously evaluated and caused by the non-mechanistic single failure of a component in the FBCHC load path.

The current licensing basis accidents for which new initiators are created by this amendment are the spent fuel shipping cask drop and the fuel handling accident. The RBS current licensing basis includes evaluations of the consequences of a spent fuel shipping cask drop and the consequences of the drop of a spent fuel assembly into the reactor core shortly after shutdown and reactor head removal. The new initiators include the drop of a spent fuel transfer cask of the same maximum weight and approximately the same dimensions as the shipping cask, and the drop of a spent fuel canister lid into an open, fuel filled canister in the spent fuel pool. Both of these new initiators create hypothetical accidents that are comparable in consequences to those previously evaluated. For the drop of a spent fuel transfer cask, the consequences are bounded by the current licensing basis analysis of the spent fuel shipping cask drop. That is, there is no significant damage to the Fuel Building structure or any SSCs used for safe plant shutdown, and there is no release of radioactive material. New analyses of the drop of a loaded transfer cask confirm that there is no release of radioactive material from the storage canister and no unacceptable damage to the fuel, MPC, or transfer cask.

For the drop of the spent fuel canister lid, the significantly longer decay time of the spent fuel assemblies in the canister compared to a spent fuel assembly in a recently shutdown reactor results in doses to the public that are less than the previously analyzed fuel handling accident. There is no rearrangement of the fuel in the canister such that a critical geometry is created as a result of an MPC lid drop.

3. Will operation of the facility in accordance with this proposed amendment involve a significant reduction in a margin of safety?

Response: No.

The proposed amendment introduces no new mode of plant operations and does not affect SSCs associated with power production, accident mitigation, or safe plant shutdown. The SSCs affected by this proposed amendment are the non-single-failure-proof FBCHC, the spent fuel storage canister, the spent fuel transfer cask, and the spent fuel inside the canister. Therefore, this amendment does not affect the reactor or fuel during power operations, the reactor coolant pressure boundary, or primary or secondary containment. All activities associated with this amendment occur in the Fuel Building or in the adjacent outdoor truck bay area. The design function of the FBCHC is not changed. The proposed changes to plant operating procedures needed to implement dry spent fuel storage at RBS do not exceed or alter a design basis or safety limit associated with plant operation, accident mitigation, or safe shutdown. The FBCHC is used to lift and handle the spent fuel canister lid over spent fuel in the canister while in the spent fuel pool, and to lift and handle the spent fuel transfer cask, both when it is empty and after it is loaded with spent fuel in the spent fuel pool.

This proposed amendment results in a net safety benefit because a larger capacity cask is being used to move spent fuel out of the spent fuel pool that was previously evaluated (68 fuel assemblies versus 18 fuel assemblies), while maintaining the same maximum analyzed cask weight described in the USAR. This yields fewer casks to be loaded, fewer heavy load lifts, and, as a result, fewer opportunities for events such as load drops. Because the maximum weight of the loaded spent fuel transfer cask is the same as that assumed for the shipping cask and for which the FBCHC was designed, all design safety margins for use of the FBCHC remain unchanged. The rated capacity of the FBCHC is approximately 16 times that of components lifted to place the spent fuel canister lid, yielding significant safety margins for that particular lift.

Based on the above review, it is concluded that: (1) the proposed amendment does not constitute a significant hazards consideration as defined by 10 CFR 50.92; and (2) there is reasonable assurance that the health and safety of the public will not be endangered by the proposed amendment; and (3) this action will not result in a condition which significantly alters the impact of the station on the environment as described in the NRC Final Environmental Impact Statement.

The NRC staff has reviewed the licensee's analysis and, based on this review, it appears that the three standards of 10 CFR 50.92(c) are satisfied. Therefore, the NRC staff proposes to determine that the amendment request involves no significant hazards consideration.

Attorney for licensee: Mark Wetterhahn, Esq., Winston & Strawn, 1400 L Street, NW., Washington, DC 20005.

NRC Section Chief: Allen G. Howe.

Exelon Generation Company, LLC, Docket Nos. STN 50–456 and STN 50–457, Braidwood Station, Unit Nos. 1 and 2, Will County, Illinois

Docket Nos. STN 50–454 and STN 50–455, Byron Station, Unit Nos. 1 and 2, Ogle County, Illinois

Docket No. 50–237, Dresden Nuclear Power Station, Unit 2, Grundy County, Illinois

Docket Nos. 50–373 and 50–374, LaSalle County Station, Units 1 and 2, LaSalle County, Illinois

Date of amendment request: February 25, 2005.

Description of amendment request: The proposed change would delete the applicable sections of the Facility Operating Licenses (FOLs); NPF–72, NPF–77, NPF–37, NPF–66, DPR–19, NPF–11, and NPF–18, respectively; which require Exelon Generation Company, LLC, to report violations of the requirements contained in Section 2.C of the Braidwood Station, Units 1 and 2, and Byron Station, Units 1 and 2 FOLs; Section 2.C of the Dresden Nuclear Power Station, Unit 2, renewed FOL; and Sections 2.C and 2.E of the LaSalle County Station, Units 1 and 2, FOLs. The proposed change will reduce unnecessary regulatory burden and will allow Exelon to take full advantage of the revisions to Title 10, Code of Federal Regulations (10 CFR), Section 50.72, ''Immediate notification requirements for operating nuclear power reactors,'' and 10 CFR 50.73, ''Licensee event report system.''

Basis for proposed no significant hazards consideration determination: As required by 10 CFR 50.91(a), the licensee has provided its analysis of the issue of no significant hazards consideration, which is presented below:

1. Does the proposed change involve a significant increase in the probability or consequences of an accident previously evaluated?

Response: No.

The proposed change involves an administrative change only. The proposed change does not involve the modification of any plant equipment or affect plant operation. The proposed change will have no impact on any safety related structures, systems or components. The reporting requirement section of the FOL is not required because the requirements are either adequately addressed by 10 CFR 50.72 and 10 CFR 50.73, or other regulatory requirements, or are not required based on the nature of the Condition.

Therefore, the proposed change does not involve a significant increase in the probability or consequences of an accident previously evaluated.

2. Does the proposed change create the possibility of a new or different kind of

accident from any accident previously evaluated?

Response: No.

The proposed change has no impact on the design, function or operation of any plant structure, system or component. The proposed change is administrative in nature and does not affect plant equipment or accident analyses. The reporting requirement section of the FOL is not required because the requirements are either adequately addressed by 10 CFR 50.72 and 10 CFR 50.73, or other regulatory requirements, or are not required based on the nature of the Condition.

Therefore, the proposed change will not create the possibility of a new or different kind of accident from any accident previously evaluated.

3. Does the proposed change involve a significant reduction in a margin of safety?

Response: No.

The proposed change is administrative in nature, does not negate any existing requirement, and does not adversely affect existing plant safety margins or the reliability of the equipment assumed to operate in the safety analysis. As such, there is no change being made to safety analysis assumptions, safety limits or safety system settings that would adversely affect plant safety as a result of the proposed change. Margins of safety are unaffected by deletion of the reporting requirement that is adequately addressed elsewhere.

Therefore, the proposed change does not involve a significant reduction in a margin of safety.

The NRC staff has reviewed the licensee's analysis and, based on this review, it appears that the three standards of 10 CFR 50.92(c) are satisfied. Therefore, the NRC staff proposes to determine that the requested amendments involve no significant hazards consideration.

Attorney for licensee: Mr. Thomas S. O'Neill, Associate General Counsel, Exelon Generation Company, LLC, 4300 Winfield Road, Warrenville, IL 60555.

NRC Section Chief: Gene Y. Suh.

Exelon Generation Company, LLC, Docket Nos. 50–352 and 50–353, Limerick Generating Station, Unit Nos. 1 and 2, Montgomery County, Pennsylvania

Date of amendment request: February 25, 2005.

Description of amendment request: The proposed change would delete the applicable sections of the Limerick Generating Station, Units 1 and 2, Facility Operating Licenses (FOLs), NPF–39 and NPF–85, which require Exelon Generation Company, LLC, (Exelon), to report violations of the requirements contained in Section 2.C of these licenses. The proposed change will reduce unnecessary regulatory burden and will allow AmerGen to take full advantage of the revisions to Title 10, Code of Federal Regulations (10 CFR), Section 50.72, ''Immediate notification requirements for operating nuclear power reactors,'' and 10 CFR 50.73, ''Licensee event report system.''

Basis for proposed no significant hazards consideration determination: As required by 10 CFR 50.91(a), the licensee has provided its analysis of the issue of no significant hazards consideration, which is presented below:

1. Does the proposed change involve a significant increase in the probability or consequences of an accident previously evaluated?

Response: No.

The proposed change involves an administrative change only. The proposed change does not involve the modification of any plant equipment or affect plant operation. The proposed change will have no impact on any safety related structures, systems or components. The reporting requirement section of the FOL is not required because the requirements are either adequately addressed by 10 CFR 50.72 and 10 CFR 50.73, or other regulatory requirements, or are not required based on the nature of the Condition.

Therefore, the proposed change does not involve a significant increase in the probability or consequences of an accident previously evaluated.

2. Does the proposed change create the possibility of a new or different kind of accident from any accident previously evaluated?

Response: No.

The proposed change has no impact on the design, function or operation of any plant structure, system or component. The proposed change is administrative in nature and does not affect plant equipment or accident analyses. The reporting requirement section of the FOL is not required because the requirements are either adequately addressed by 10 CFR 50.72 and 10 CFR 50.73, or other regulatory requirements, or are not required based on the nature of the Condition.

Therefore, the proposed change will not create the possibility of a new or different kind of accident from any accident previously evaluated.

3. Does the proposed change involve a significant reduction in a margin of safety?

Response: No.

The proposed change is administrative in nature, does not negate any existing requirement, and does not adversely affect existing plant safety margins or the reliability of the equipment assumed to operate in the safety analysis. As such, there is no change being made to safety analysis assumptions, safety limits or safety system settings that would adversely affect plant safety as a result of the proposed change. Margins of safety are unaffected by deletion of the reporting requirement that is adequately addressed elsewhere.

Therefore, the proposed change does not involve a significant reduction in a margin of safety.

The NRC staff has reviewed the licensee's analysis and, based on this review, it appears that the three standards of 10 CFR 50.92(c) are satisfied. Therefore, the NRC staff proposes to determine that the requested amendment involves no significant hazards consideration.

Attorney for licensee: Mr. Thomas S. O'Neill, Associate General Counsel, Exelon Generation Company, LLC, 4300 Winfield Road, Warrenville, IL 60555.

NRC Section Chief: Darrell J. Roberts.

FirstEnergy Nuclear Operating Company, et al., Docket Nos. 50–334 and 50–412, Beaver Valley Power Station, Unit Nos. 1 and 2 (BVPS–1 and 2), Beaver County, Pennsylvania

Date of amendment request: February 11, 2005.

Description of amendment request: The proposed changes would modify the BVPS–1 and 2 Technical Specifications (TSs) to implement the relaxed axial offset control (RAOC) and F_Q surveillance methodologies. These methodologies are used to reduce operator action required to maintain conformance with power distribution control TSs, and increase the ability to return to power after a plant trip while still maintaining margin to safety limits under all operating conditions.

Basis for proposed no significant hazards consideration determination: As required by 10 CFR 50.91(a), the licensee has provided its analysis of the issue of no significant hazards consideration, which is presented below:

1. Does the proposed change involve a significant increase in the probability or consequences of an accident previously evaluated?

Response: No. The proposed changes will not involve a significant increase in the probability or consequences of an accident previously evaluated.

The proposed changes do not initiate an accident. Evaluations and analyses of accidents, which are potentially affected by the parameters and assumptions, associated with the RAOC and $F_Q(Z)$ methodologies have shown that all design standards and applicable safety criteria will continue to be met. The consideration of these changes does not result in a situation where the design, material, or construction standards that were applicable prior to the change are altered. Therefore, the proposed changes will not result in any additional challenges to plant equipment that could increase the probability of any previously evaluated accident.

The proposed changes associated with the RAOC and $F_Q(Z)$ methodologies do not affect plant systems such that their function in the control of radiological consequences is adversely affected. The actual plant configuration, performance of systems, or initiating event mechanisms are not being

changed as a result of the proposed changes. The design standards and applicable safety criteria limits will continue to be met, therefore, fission barrier integrity is not challenged. The proposed changes associated with the RAOC and $F_Q(Z)$ methodologies have been shown not to adversely affect the plant response to postulated accident scenarios. The proposed changes will therefore not affect the mitigation of the radiological consequences of any accident described in the Updated Final Safety Analysis Report (UFSAR).

Therefore the proposed changes do not involve a significant increase in the probability or consequences of any accident previously evaluated.

2. Does the proposed change create the possibility of a new or different kind of accident from any accident previously evaluated?

Response: No. The proposed changes will not create the possibility of a new or different kind of accident from any accident previously evaluated.

No new accident scenarios, failure mechanisms, or limiting single failures are introduced as a result of the proposed change. The proposed changes do not challenge the performance or integrity of any safety-related system. The possibility for a new or different type of accident from any accident previously evaluated is not created since the proposed change does not result in a change to the design basis of any plant structure, system or component. Evaluation of the effects of the proposed changes has shown that all design standards and applicable safety criteria continue to be met.

Equipment important to safety will continue to operate as designed and component integrity will not be challenged. The proposed changes do not result in any event previously deemed incredible being made credible. The proposed changes will not result in conditions that are more adverse and will not result in any increase in the challenges to safety systems.

Therefore, the proposed changes do not create the possibility of a new or different kind of accident from any previously analyzed.

3. Does the proposed change involve a significant reduction in a margin of safety?

Response: No. The proposed changes will not involve a significant reduction in a margin of safety. The proposed changes will assure continued compliance within the acceptance limits previously reviewed and approved by the NRC for RAOC and $F_Q(Z)$ methodologies. All of the appropriate acceptance criteria for the various analyses and evaluations will continue to be met.

The impact associated with the implementation of RAOC on peak cladding temperature (PCT) has been evaluated for the planned extended power uprate. This evaluation has determined that implementation of RAOC at the extended power uprate power level will not result in a significant reduction in a margin of safety for either unit.

Therefore, the proposed changes do not involve a significant reduction in a margin of safety.

The NRC staff has reviewed the licensee's analysis and, based on this review, it appears that the three standards of 10 CFR 50.92(c) are satisfied. Therefore, the NRC staff proposes to determine that the amendment request involves no significant hazards consideration.

Attorney for licensee: Mary O'Reilly, FirstEnergy Nuclear Operating Company, FirstEnergy Corporation, 76 South Main Street, Akron, OH 44308.

NRC Section Chief: Richard J. Laufer.

FirstEnergy Nuclear Operating Company, et al., Docket Nos. 50–334 and 50–412, Beaver Valley Power Station, Unit Nos. 1 and 2 (BVPS–1 and 2), Beaver County, Pennsylvania

Date of amendment request: February 17, 2005.

Description of amendment request: The proposed amendments would revise Technical Specification (TS) 3.7.7.1, ''Control Room Emergency Habitability Systems'' (BVPS–1), and TS 3.7.7, ''Control Room Emergency Air Cleanup and Pressurization System'' (BVPS–2), by dividing each specification into two specifications, addressing control room emergency ventilation and control room air cooling functions separately. Other minor changes are proposed to improve consistency with the Standard TSs and consistency between BVPS–1 and 2.

Basis for proposed no significant hazards consideration determination: As required by 10 CFR 50.91(a), the licensee has provided its analysis of the issue of no significant hazards consideration, which is presented below:

1. Does the proposed change involve a significant increase in the probability or consequences of an accident previously evaluated?

No.

The proposed changes do not adversely affect accident initiators or precursors or alter the design assumptions, conditions or configuration of the facility. The proposed changes do not alter or prevent the ability of structures, systems, or components to perform their intended function to mitigate the consequences of an initiating event within the assumed acceptance limits. The proposed change revises the TSs for the control room ventilation systems which are mitigating systems designed to minimize inleakage, to filter the control room atmosphere and to provide heat removal for the control room envelope. These functions maintain the control room temperature within design limits and protect the control room personnel following accidents previously analyzed. The proposed changes do not alter or reduce the capability of the affected systems to maintain the control room temperature and protect the control room personnel consistent with the assumptions of the applicable safety analyses. Therefore, the probability of any accident previously evaluated is not significantly increased. The proposed change continues to assure [that] adequate system and component testing is performed to verify the operability of the control room habitability systems to ensure mitigation features are capable of performing the assumed functions. Therefore, the consequences of any accident previously evaluated are not significantly increased.

Therefore, it is concluded that the proposed change does not involve a significant increase in the probability or consequences of an accident previously evaluated.

2. Does the proposed change create the possibility of a new or different kind of accident from any accident previously evaluated?

No.

The proposed changes will not adversely impact the accident analysis. The changes will not alter the requirements of the control room ventilation systems or their functions during accident conditions. No new or different accidents result from the application of the revised TS requirements. The changes do not involve a physical alteration of the plant (*i.e.*, no new or different type of equipment will be installed) or a significant change in the methods governing normal plant operation. The changes do not alter assumptions made in the safety analyses. The proposed changes are consistent with the safety analyses assumptions and current plant operating practices.

Therefore, the proposed change does not create the possibility of a new or different kind of accident from any accident previously evaluated.

3. Does the proposed change involve a significant reduction in a margin of safety?

No.

The proposed changes do not alter the manner in which safety limits, limiting safety system settings or limiting conditions for operation are determined. The safety analysis acceptance criteria are not affected by these changes. The proposed changes will not result in plant operation in a configuration outside the design basis for an unacceptable period of time without compensatory measures. The proposed changes do not adversely affect systems that respond to safely shut down the plant and to maintain the plant in a safe shutdown condition.

Therefore, the proposed change does not involve a significant reduction in a margin of safety.

The NRC staff has reviewed the licensee's analysis and, based on this review, it appears that the three standards of 10 CFR 50.92(c) are satisfied. Therefore, the NRC staff proposes to determine that the amendment request involves no significant hazards consideration.

Attorney for licensee: Mary O'Reilly, FirstEnergy Nuclear Operating Company, FirstEnergy Corporation, 76 South Main Street, Akron, OH 44308.

NRC Section Chief: Richard J. Laufer.

Nuclear Management Company, LLC, Docket Nos. 50–282 and 50–306, Prairie Island Nuclear Generating Plant, Units 1 and 2, Goodhue County, Minnesota

Date of amendment request: February 28, 2005.

Description of amendment request: The proposed amendments would allow the use of the Small Break Loss of Coolant Accident (SBLOCA) methodology described in Westinghouse WCAP 10054–P–A Addendum 2 Revision 1, ''Addendum to the Westinghouse Small Break emergency core cooling system (ECCS) Evaluation Model Using the NOTRUMP Code: Safety Injection into the Broken Loop and COSI Condensation Model'' dated July 1997. This revised methodology determines the core response following a SBLOCA event and will be used to assure compliance with the post Loss of Coolant Accident (LOCA) acceptance criteria specified in 10 CFR 50.46.

Basis for proposed no significant hazards consideration determination: As required by 10 CFR 50.91(a), the licensee has provided its analysis of the issue of no significant hazards consideration, which is presented below:

1. Do the proposed changes involve a significant increase in the probability or consequences of an accident previously evaluated?

Response: No.

The proposed amendment will change the Prairie Island Nuclear Generating Plant licensing basis by allowing the use of the approved NOTRUMP SBLOCA Evaluation Model described in Westinghouse WCAP 10054–P–A Addendum 2 Revision 1, ''Addendum to the Westinghouse Small Break ECCS Evaluation Model Using the NOTRUMP Code: Safety Injection into the Broken Loop and COSI Condensation Model''.

The methodology used to perform small break loss of coolant accident (SBLOCA) analyses is not an accident initiator, thus changing the methodology does not increase the probability of an accident.

The fuel heat-up results generated by the proposed methodology will be utilized to demonstrate that the loss of coolant accident (LOCA) criteria for design basis for fission product barriers as described in 10 CFR Part 50.46 are not exceeded. The proposed methodology does not alter the nuclear reactor core, reactor coolant system, or equipment used directly in mitigation of a Small Break LOCA, thus radioactive releases due to a SBLOCA accident are not affected by the proposed change in analysis methodology. Therefore, this change does not increase the consequences of an accident previously evaluated.

Therefore, the proposed changes do not involve a significant increase in the probability or consequences of an accident previously evaluated.

2. Do the proposed changes create the possibility of a new or different kind of accident from any accident previously evaluated?

Response: No.

The proposed amendment will change the Prairie Island Nuclear Generating Plant licensing basis by allowing the use of the approved NOTRUMP SBLOCA Evaluation Model described in Westinghouse WCAP 10054–P–A Addendum 2 Revision 1, ''Addendum to the Westinghouse Small Break ECCS Evaluation Model Using the NOTRUMP Code: Safety Injection into the Broken Loop and COSI Condensation Model''.

The analysis of a SBLOCA accident using the proposed methodology does not alter the nuclear reactor core, reactor coolant system, or equipment used directly in mitigation of a Small Break LOCA.

Therefore, the proposed changes do not create the possibility of a new or different kind of accident from any previously evaluated.

3. Do the proposed changes involve a significant reduction in a margin of safety?

Response: No.

The proposed amendment will change the Prairie Island Nuclear Generating Plant licensing basis by allowing the use of the approved NOTRUMP SBLOCA Evaluation Model described in Westinghouse WCAP 10054–P–A Addendum 2 Revision 1, ''Addendum to the Westinghouse Small Break ECCS Evaluation Model Using the NOTRUMP Code: Safety Injection into the Broken Loop and COSI Condensation Model''.

The methodology in the proposed licensing basis change has previously been reviewed and approved by the Nuclear Regulatory Commission as a conservative methodology. The Prairie Island configuration is representative of the modeling used in the methodology. Therefore, the proposed licensing basis change will result in a conservative calculation of fuel conditions following a SBLOCA event. This will ensure that there is no reduction in the margin of safety for Prairie Island SBLOCA analyses that utilize this methodology.

Therefore, the proposed changes do not involve a significant reduction in a margin of safety.

The NRC staff has reviewed the licensee's analysis and, based on this review, it appears that the three standards of 10 CFR 50.92(c) are satisfied. Therefore, the NRC staff proposes to determine that the amendment requests involve no significant hazards consideration.

Attorney for licensee: Jonathan Rogoff, Esquire, Vice President, Counsel & Secretary, Nuclear Management Company, LLC, 700 First Street, Hudson, WI 54016.

NRC Section Chief: L. Raghavan.

Omaha Public Power District, Docket No. 50–285, Fort Calhoun Station, Unit No. 1, Washington County, Nebraska

Date of amendment request: March 31, 2005.

Description of amendment request: The proposed amendment will increase the licensed power level to 1522 megawatts thermal (MWt) or 1.50 percent greater than the current power level of 1500 MWt. The requested increase in licensed rated power is the result of a measurement uncertainty recapture (MUR) power uprate. The information provided in support of this request is based on the NRC's Regulatory Issue Summary 2002–03, ''Guidance on the Content of Measurement Uncertainty Recapture Power Uprate Applications,'' dated January 31, 2002.

On July 18, 2003, the licensee submitted, and the NRC subsequently approved, an MUR power uprate amendment to increase the licensed power level to 1524 MWt or 1.6 percent greater than the current level of 1500 MWt. Problems during implementation resulted in the submission of an exigent license amendment request (LAR), which returned the licensed power to its original level (1500 MWt). The current LAR references the analysis from the July 18, 2003 submittal.

Basis for proposed no significant hazards consideration determination: As required by 10 CFR 50.91(a), the licensee has provided its analysis of the issue of no significant hazards consideration, which is presented below:

1. The proposed change does not involve a significant increase in the probability or consequences of an accident previously evaluated.

Response: No.

There are no changes as a result of the MUR power uprate to the design or operation of the plant that could affect system, component, or accident functions. All systems and components function as designed and the performance requirements have been evaluated and found to be acceptable.

The reduction in power measurement uncertainty allows for safety analyses to continue to be used without modification. This is because those safety analyses were performed or evaluated at 102% of 1500 MWt (1530 MWt) or higher. Analyses at these power levels support a core power level of 1522 MWt with a measurement uncertainty of 0.5%. Radiological consequences of USAR [Updated Safety Analysis Report] Chapter 14 accidents were assessed previously using the alternate source term methodology (Reference 10.2 [Agencywide Documents Access Management System accession number ML013410095]). These analyses were performed at 102% of 1500 MWt (1530 MWt) and continue to be bounding. Updated Safety

Analysis Report (USAR) Chapter 14 analyses and accident analyses continue to demonstrate compliance with the relevant accident analyses' acceptance criteria. Therefore, there is no significant increase in the consequences of any accident previously evaluated.

The primary loop components (reactor vessel, reactor internals, control element drive mechanisms, loop piping and supports, reactor coolant pumps, steam generators, and pressurizer) were evaluated at an uprated core power level of 1524 MWt and continue to comply with their applicable structural limits. These analyses also demonstrate the components will continue to perform their intended design functions. Changing the heatup and cooldown curves is based on uprated fluence values. This does not have a significant effect on the reactor vessel integrity. Thus, there is no significant increase in the probability of a structural failure of the primary loop components. The LBB [leak before break] analysis conclusions remain valid and the breaks previously exempted from structural consideration remain unchanged.

All of the NSSS [nuclear steam system supplier] systems will continue to perform their intended design functions during normal and accident conditions. The auxiliary systems and components continue to comply with the applicable structural limits and will continue to perform their intended functions. The NSSS/BOP [nuclear steam system supplier/balance of plant] interface systems were evaluated at 1522 MWt and will continue to perform their intended design functions. Plant electrical equipment was also evaluated and will continue to perform their intended functions. Therefore, the proposed change does not involve a significant increase in the probability or consequences of an accident previously evaluated.

2. The proposed change does not create the possibility of a new or different kind of accident from any accident previously evaluated.

Response: No.

No new accident scenarios, failure mechanisms, or single failures are introduced as a result of the proposed change. All systems, structures, and components previously required for the mitigation of an event remain capable of fulfilling their intended design function at the uprated power level. The proposed change has no adverse effects on any safety related systems or component and does not challenge the performance or integrity of any safety related system. Therefore, the proposed change does not create the possibility of a new or different kind of accident from any accident previously evaluated.

3. The proposed change does not involve a significant reduction in a margin of safety.

Response: No.

Operation at 1522 MWt core power does not involve a significant reduction in the margin of safety. The current accident analyses have been previously performed with a 2% power measurement uncertainty or at uprated core powers that exceed the MUR uprated core power. System and component analyses have been completed at the MUR uprated core power conditions. Analyses of the primary fission product barriers at uprated core powers have concluded that all relevant design basis criteria remain satisfied in regard to integrity and compliance with the regulatory acceptance criteria. As appropriate, all evaluations have been both reviewed and approved by the NRC, or are currently under review (the proposed Pressure-Temperature Limits Report). Therefore, the proposed change does not involve a significant reduction in margin of safety.

The NRC staff has reviewed the licensee's analysis and, based on this review, it appears that the three standards of 10 CFR 50.92(c) are satisfied. Therefore, the NRC staff proposes to determine that the amendment request involves no significant hazards consideration.

Attorney for licensee: James R. Curtiss, Esq., Winston & Strawn, 1400 L Street, NW., Washington, DC 20005–3502.

NRC Section Chief: Robert A. Gramm.

Pacific Gas and Electric Company, Docket Nos. 50–275 and 50–323, Diablo Canyon Nuclear Power Plant, Unit Nos. 1 and 2, San Luis Obispo County, California

Date of amendment requests: December 28, 2004.

Description of amendment requests: The proposed amendments would relocate reactor coolant system related cycle-specific parameters from the Technical Specifications to the Core Operating Limits Report.

Basis for proposed no significant hazards consideration determination: As required by 10 CFR 50.91(a), the licensee has provided its analysis of the issue of no significant hazards consideration, which is presented below:

1. The proposed change does not involve a significant increase in the probability or consequences of an accident previously evaluated.

The proposed changes are programmatic and administrative in nature, which do not physically alter safety related systems, nor affect the way in which safety related systems perform their functions. More specific requirements regarding the safety limits (*i.e.*, departure from nucleate boiling ratio limit and peak fuel centerline temperature limit) are being imposed in Technical Specification (TS) 2.1.1, ''Reactor Core SLs [Safety Limits],'' which replace the reactor core safety limits figure and are consistent with the values stated in the Final Safety Analysis Report Update (FSARU). The proposed changes remove cycle-specific parameters from TS 3.4.1 and relocate them to the Core Operating Limits Report (COLR), which do not change the plant design or affect system operating parameters. In addition, the minimum limit for reactor coolant system (RCS) total flow rate is being retained in TS 3.4.1 to assure that a lower flow rate than reviewed by the NRC will not be used. The proposed changes do not, by themselves, alter any of the parameters. The removal of the cycle-specific parameters from the TS does not eliminate existing requirements to comply with the parameters.

The proposed changes to TS 5.6.5b to reference only the topical report number and title for three of the topical reports do not alter the use of the analytical methods used to determine core operating limits that have been reviewed and approved by the NRC. This method of referencing topical reports would allow the use of current topical reports to support limits in the COLR without having to submit a request for an amendment to the operating license. Implementation of revisions to these topical reports would still be reviewed in accordance with 10 CFR 50.59 and, where required, receive NRC review and approval.

Although the relocation of the cycle-specific parameters to the COLR would allow revision of the affected parameters without prior NRC approval, there is no significant effect on the probability or consequences of an accident previously evaluated. Future changes to the COLR parameters could result in event consequences which are either slightly less or slightly more severe than the consequences for the same event using the present parameters. The differences would not be significant and would be bounded by the existing requirement of TS 5.6.5c to meet the applicable limits of the safety analyses.

The cycle-specific parameters being transferred from the TS to the COLR will continue to be controlled under existing programs and procedures. The FSARU accident analyses will continue to be examined with respect to changes in the cycle-dependent parameters obtained using NRC reviewed and approved reload design methodologies, ensuring that the transient evaluation of new reload designs are bounded by previously accepted analyses. This examination will continue to be performed pursuant to 10 CFR 50.59 requirements, ensuring that future reload designs will not involve a significant increase in the probability or consequences of an accident previously evaluated. Additionally, the proposed changes do not allow for an increase in plant power levels, do not increase the production, nor alter the flow path or method of disposal of radioactive waste or byproducts. Therefore, the proposed changes do not change the type or increase the amount of any effluents released offsite.

Therefore, the proposed changes do not involve a significant increase in the probability or consequences of an accident previously evaluated.

2. The proposed change does not create the possibility of a new or different kind of accident from any accident previously evaluated.

The proposed changes that retain the minimum limit for RCS total flow rate in the TS, and that relocate certain cycle-specific parameters from the TS to the COLR, thus removing the requirement for prior NRC approval of revisions to those parameters, do not involve a physical change to the plant. No new equipment is being introduced, and

installed equipment is not being operated in a new or different manner. There are no changes being made to the parameters within which the plant is operated, other than their relocation to the COLR. There are no set points affected by the proposed changes at which protective or mitigative actions are initiated. The proposed changes will not alter the manner in which equipment operation is initiated, nor will the function demands on credited equipment be changed. No alteration in the procedures which ensure the plant remains within analyzed limits is being proposed, and no change is being made to the procedures relied upon to respond to an off-normal event. As such, no new failure modes are being introduced.

The proposed changes to reference only the topical report number and title do not alter the use of the analytical methods used to determine core operating limits that have been reviewed and approved by the NRC. This method of referencing topical reports would allow the use of current topical reports to support limits in the COLR without having to submit a request for an amendment to the operating license. Implementation of revisions to topical reports would still be reviewed in accordance with 10 CFR 50.59 and, where required, receive NRC review and approval.

Relocation of cycle-specific parameters has no influence or impact on, nor does it contribute in any way to the possibility of a new or different kind of accident. The relocated cycle-specific parameters will continue to be calculated using the NRC reviewed and approved methodology. The proposed changes do not alter assumptions made in the safety analysis, and operation within the core operating limits will continue.

Therefore, the proposed changes do not create a new or different kind of accident from any accident previously evaluated.

3. The proposed change does not involve a significant reduction in a margin of safety.

The margin of safety is established through equipment design, operating parameters, and the set points at which automatic actions are initiated. The proposed changes do not physically alter safety-related systems, nor do they affect the way in which safety-related systems perform their functions. The set points at which protective actions are initiated are not altered by the proposed changes. Therefore, sufficient equipment remains available to actuate upon demand for the purpose of mitigating an analyzed event. As the proposed changes to relocate cycle-specific parameters to the COLR will not affect plant design or system operating parameters, there is no detrimental impact on any equipment design parameter, and the plant will continue to operate within prescribed limits.

The development of cycle-specific parameters for future reload designs will continue to conform to NRC reviewed and approved methodologies, and will be performed pursuant to 10 CFR 50.59 to assure that the plant operates within cycle-specific parameters.

The proposed changes to reference only the topical report number and title do not alter the use of the analytical methods used to determine core operating limits that have been reviewed and approved by the NRC. This method of referencing topical reports would allow the use of current NRC-approved topical reports to support limits in the COLR without having to submit a request for an amendment to the operating license. Implementation of revisions to topical reports would still be reviewed in accordance with 10 CFR 50.59 and, where required, receive NRC review and approval.

Therefore, the proposed changes do not involve a significant reduction in the margin of safety.

The NRC staff has reviewed the licensee's analysis and, based on this review, it appears that the three standards of 10 CFR 50.92(c) are satisfied. Therefore, the NRC staff proposes to determine that the amendment requests involve no significant hazards consideration.

Attorney for licensee: Richard F. Locke, Esq., Pacific Gas and Electric Company, P.O. Box 7442, San Francisco, California 94120.

NRC Section Chief: Robert A. Gramm.

Pacific Gas and Electric Company, Docket Nos. 50–275 and 50–323, Diablo Canyon Nuclear Power Plant, Unit Nos. 1 and 2, San Luis Obispo County, California

Date of amendment requests: December 31, 2004.

Description of amendment requests: The proposed amendments would revise Technical Specification 3.4.10, ''Pressurizer Safety Valves'' to add a separate Action and associated Completion Times for one or more inoperable pressurizer safety valves for the condition where the valves are inoperable solely due to loop seal temperatures being outside of design limits.

Basis for proposed no significant hazards consideration determination: As required by 10 CFR 50.91(a), the licensee has provided its analysis of the issue of no significant hazards consideration, which is presented below:

1. The proposed change does not involve a significant increase in the probability or consequences of an accident previously evaluated.

This proposed change revises Technical Specification (TS) 3.4.10, ''Pressurizer Safety Valves,'' to add a separate Action and associated Completion Times (CTs) for one or more inoperable pressurizer safety valves (PSV) for the condition where the valves are inoperable solely due to loop seal temperatures being outside of design limits. Currently, when a PSV is in such a condition, it is conservatively declared inoperable and TS 3.4.10 Condition A is entered which has a CT of 15 minutes. A CT of 15 minutes normally provides insufficient time for restoring a PSV loop seal temperature to within limits. The new Action will provide CTs of 12 hours for exceeding the high temperature limit and 24 hours (MODES 1 and 2) or 72 hours (MODES 3 and 4) for exceeding the low temperature limit. In addition, two new PSV loop seal temperature surveillance requirements are proposed to assist in assuring PSV operability.

Loop seals are provided in the PSV inlet piping to maintain PSV body temperature within vendor recommended limits. This prevents PSV seat leakage that can result from spring relaxation with increased temperature. However, the water in the loop seals must be maintained at or above a minimum temperature to allow it to flash to steam when a PSV lifts. Because of the low density and low mass flow rate, PSV steam relief imposes minimal loading on the discharge piping ensuring acceptable pipe stresses. However, if cooler water is maintained in the loop seals, it may not flash completely, and a water and steam mixture could be discharged when a PSV lifts. Because of the higher density and higher mass flow rate, PSV relief of water and steam could impose increased loading and could result in unacceptably high pipe stresses on the discharge piping which could render the PSVs inoperable and/or damage the discharge piping.

The concern with the PSV opening during liquid relief conditions or with the loop seal temperature outside design limits, is the ability to ensure the valve reseats properly and no leakage occurs after the valve closes. However, even under liquid relief conditions, PSVs are still capable of providing their required relief capacity.

Failure of the PSV to reseat following discharge would result in an unisolable reactor coolant system leak. The consequences of such a leak are bounded by existing Final Safety Analysis Report Update (FSARU) accident analyses. Probabilistic risk assessment methods and a deterministic analysis have been utilized to determine there is no significant increase in core damage frequency or large early release frequency.

Therefore, the proposed change does not involve a significant increase in the probability or consequences of an accident previously evaluated.

2. The proposed change does not create the possibility of a new or different kind of accident from any accident previously evaluated.

Failure of one or more PSVs to reseat following discharge would result in an unisolable reactor coolant system leak. The consequences of such a leak are bounded by existing FSARU accident analyses and no new failure modes are introduced.

Therefore, the proposed change does not create the possibility of a new or different accident from any accident previously evaluated.

3. The proposed change does not involve a significant reduction in a margin of safety.

The proposed change is based upon both a deterministic evaluation and a risk-informed assessment.

The deterministic evaluation concluded that even with the loop seal temperature outside of design limits, causing one or more PSVs to be declared inoperable, the PSVs

would still lift on demand to perform their safety function. Failure of one or more PSVs to reseat following discharge, resulting in an unisolable reactor coolant system leak, is an event bounded by existing FSARU accident analyses.

The risk assessment performed to support this license amendment request concluded that the increase in plant risk is small and consistent with the NRC's Safety Goal Policy Statement, ''Use of Probabilistic Risk Assessment Methods in Nuclear Activities: Final Policy Statement,'' **Federal Register**, Volume 60, p. 42622, August 16, 1995 and guidance contained in of Regulatory Guides (RG) 1.174, ''An Approach for Using Probabilistic Risk Assessment in Risk-Informed Decisions on Plant-Specific Changes to the Licensing Basis,'' dated July 1998 and RG 1.177, ''An Approach for Plant-Specific, Risk-Informed Decisionmaking: Technical Specifications,'' dated August 1998.

Together, the deterministic evaluation and the risk-informed assessment provide high assurance that the PSVs will meet their design requirements.

Therefore, the proposed change does not involve a significant reduction in a margin of safety.

The NRC staff has reviewed the licensee's analysis and, based on this review, it appears that the three standards of 10 CFR 50.92(c) are satisfied. Therefore, the NRC staff proposes to determine that the amendment requests involve no significant hazards consideration.

Attorney for licensee: Richard F. Locke, Esq., Pacific Gas and Electric Company, P.O. Box 7442, San Francisco, California 94120.

NRC Section Chief: Robert A. Gramm.

Pacific Gas and Electric Company, Docket Nos. 50–275 and 50–323, Diablo Canyon Nuclear Power Plant, Unit Nos. 1 and 2, San Luis Obispo County, California

Date of amendment requests: March 11, 2005.

Description of amendment requests: The proposed amendment would modify Technical Specification (TS) 5.5.9, ''Steam Generator (SG) Tube Surveillance Program,'' and 5.6.10, ''Steam Generator (SG) Tube Inspection Report,'' to allow the use of the SG tube W star (W*) alternate repair criteria (ARC) on a permanent basis. The W* ARC allows axial primary water stress corrosion cracking indications in the Westinghouse explosive tube expansion (WEXTEX) region to remain in service if the indication is located below the bottom of the WEXTEX transition. In addition, TS 5.6.10.d for NRC notification requirements of the voltage-based ARC would be revised.

Basis for proposed no significant hazards consideration determination: As required by 10 CFR 50.91(a), the licensee has provided its analysis of the issue of no significant hazards consideration, which is presented below:

1. Does the proposed change involve a significant increase in the probability-or consequences of an accident previously evaluated?

Response: No.

Of the various accidents previously evaluated, the permanent use of the steam generator (SG) tube W star (W*) alternate repair criteria (ARC) only affects the steam generator tube rupture (SGTR) accident evaluation and the postulated main steam line break (MSLB) accident evaluation. Loss-of-coolant accident (LOCA) conditions cause a compressive axial load to act on the tube. Therefore, since the LOCA tends to force the tube into the tubesheet rather than pull it out, it is not a factor in this evaluation.

For the SGTR accident, the required structural margins of the SG tubes will be maintained by the presence of the tubesheet. Tube rupture is precluded for cracks in the Westinghouse explosive tube expansion (WEXTEX) region due to the constraint provided by the tubesheet. Therefore, Regulatory Guide (RG) 1.121, ''Bases for Plugging Degraded PWR Steam Generator Tubes,'' margins against burst are maintained for both normal and postulated accident conditions.

WCAP–14797–P, Revision 2, defines a length, W*, of degradation-free expanded tubing that provides the necessary resistance to tube pullout due to the pressure-induced forces (with applicable safety factors applied). The W* length supplies the necessary resistive force to preclude pullout loads under both normal operating and accident conditions. The contact pressure results from the WEXTEX expansion process, thermal expansion mismatch between the tube and tubesheet and from the differential pressure between the primary and secondary side as offset at higher tubesheet elevations by bow of the tubesheet. The proposed changes do not affect other systems, structures, components, or operational features. Therefore, the proposed change results in no significant increase in the probability of the occurrence of an SGTR or MSLB accident.

The consequences of an SGTR accident are affected by the primary-to-secondary leakage flow during the accident. Primary-to-secondary leakage flow through a postulated broken tube is not affected by the proposed changes since the tubesheet enhances the tube integrity in the region of the WEXTEX expansion by precluding tube deformation beyond its initial expanded outside diameter. The resistance to both tube rupture and collapse is strengthened by the tubesheet in that region. At normal operating pressures, leakage from primary water stress corrosion cracking in the W* length is limited by both the tube-to-tubesheet crevice and the limited crack opening permitted by the tubesheet constraint. No leakage has been observed in any in situ test of W* indications to date. Consequently, negligible normal operating leakage is expected from cracks within the tubesheet region.

MSLB leakage is limited by leakage flow restrictions resulting from the crack and tubesheet that provide a restricted leakage path and also limit the degree of crack face opening compared to free span indications. The total leakage, that is, the combined leakage for all such tubes, plus the combined leakage developed by any other ARC and non-ARC degradation, is limited to less than the maximum allowable MSLB accident dose analysis leak rate limit, such that offsite dose is maintained less than the guideline value in Title 10 to the Code of Federal Regulations (10 CFR) Part 100 and control room dose is maintained less than the value in General Design Criterion (GDC) 19 of Appendix A to 10 CFR Part 50. In addition, the editorial changes made to Technical Specifications 5.5.9 and 5.6.10 have no impact on the MSLB leakage [and the SGTR].

Therefore, the proposed change does not involve a significant increase in the probability or consequences of an accident previously evaluated.

2. Does the proposed change create the possibility of a new or different accident from any accident previously evaluated?

Response: No.

The proposed changes do not introduce any changes or mechanisms that create the possibility of a new or different kind of accident. Tube bundle integrity is expected to be maintained for all plant conditions upon continued implementation of the W* ARC.

Axial indications left in service shall have the upper crack tip below the top of the tubesheet (TTS) by at least the value of the nondestructive examination (NDE) uncertainty and crack growth allowance, such that at the end of the subsequent operating cycle the entire crack remains below the tubesheet secondary face, thereby minimizing the potential for free span cracking and demonstrating that an acceptable level of risk is maintained for tubes returned to service under W* ARC. This repair criterion is in addition to ensuring that the upper crack tip is located below the bottom of the WEXTEX transition by at least the NDE measurement uncertainty. Condition monitoring will verify that all tube cracks returned to service under W* ARC remain below the TTS, including an allowance for NDE uncertainty.

These changes do not introduce any new equipment or any change to existing equipment. No new effects on existing equipment are created nor are any new malfunctions introduced.

Therefore, the proposed change does not create the possibility of a new or different accident from any accident previously evaluated.

3. Does the proposed change involve a significant reduction in a margin of safety?

Response: No.

The proposed changes maintain the required structural margins of the SG tubes for both normal and accident conditions. RG 1.121 is used as the basis in the development of the W* ARC for determining that SG tube integrity considerations are maintained within acceptable limits. RG 1.121 describes a method acceptable to the NRC staff for meeting General Design Criteria 14, 15, 31,

and 32 by reducing the probability and consequences of an SGTR. RG 1.121 concludes that by determining the limiting safe conditions of tube wall degradation beyond which tubes with unacceptable cracking, as established by inservice inspection, should be removed from service or repaired, the probability and consequences of a SGTR are reduced. This RG uses safety factors on loads for tube-burst that are consistent with the requirements of Section III of the ASME Code.

For primarily axially oriented cracking located within the tubesheet, tubeburst is precluded due to the presence of the tubesheet. WCAP–14797–P, Revision 2, defines a length, W*, of degradation free expanded tubing that provides the necessary resistance to tube pullout due to the pressure induced forces (with applicable safety factors applied). Application of the W* ARC will preclude unacceptable primary-to-secondary leakage during all plant conditions. The methodology for determining MSLB leakage due to indications within the tubesheet region provides for large margins between calculated and actual leakage values. In addition, the total leakage, including leakage due to use of other ARC, is maintained below the maximum allowable MSLB accident dose analysis leak rate limit, such that offsite dose is maintained less than the guideline value in 10 CFR Part 100 and control room dose is maintained less than the value in GDC 19. In addition, the editorial changes made to Technical Specifications 5.5.9 and 5.6.10 have no impact on the determination of MSLB leakage [and the SGTR].

Plugging of the SG tubes reduces the reactor coolant flow margin for core cooling. Continued implementation of W* ARC will result in maintaining the margin of flow that may have otherwise been reduced by tube plugging.

Therefore, the proposed change does not involve a significant reduction in a margin of safety.

Based on the above evaluation, PG&E [Pacific Gas and Electric Company] concludes that the proposed change presents no significant hazards consideration under the standards set forth in 10 CFR 50.92(c), and accordingly, a finding of ''no significant hazards consideration'' is justified.

The NRC staff has reviewed the licensee's analysis and, based on this review, it appears that the three standards of 10 CFR 50.92(c) are satisfied. Therefore, the NRC staff proposes to determine that the amendment requests involve no significant hazards consideration.

Attorney for licensee: Richard F. Locke, Esq., Pacific Gas and Electric Company, P.O. Box 7442, San Francisco, California 94120.

NRC Section Chief: Robert Gramm.

PPL Susquehanna, LLC, Docket Nos. 50–387 and 50–388, Susquehanna Steam Electric Station, Units 1 and 2 (SSES 1 and 2), Luzerne County, Pennsylvania

Date of amendment request: November 9, 2004.

Description of amendment request: The proposed amendments would change the SSES 1 and 2 Technical Specifications (TSs) 3.8.4, ''DC Sources–Operating,'' 3.8.5, ''DC Sources–Shutdown,'' 3.8.6, ''Battery Cell Parameters,'' and add a new TS Section, 5.5.13, ''Battery Monitoring and Maintenance Program.'' These changes are consistent with Technical Specifications Change Traveler (TSTF) 360, Revision 1 to request new actions with increased completion times for an inoperable battery chargers and alternate battery charger testing criteria for limiting condition for operation (LCO) 3.8.4 and LCO 3.8.5.

Basis for proposed no significant hazards consideration determination: As required by 10 CFR 50.91(a), the licensee has provided its analysis of the issue of no significant hazards consideration, which is presented below:

1. Does the proposed change involve a significant increase in the probability or consequences of an accident previously evaluated?

No. The proposed changes restructure the Technical Specifications (TSs) for the DC Electrical Power Systems. The proposed changes add actions to specifically address battery charger inoperability. This change will rely upon the capability of providing the battery charger function by an alternate means (*e.g.*, a 125 volts direct current (VDC) portable battery charger or a 250 VDC portable battery charger) to justify the proposed Completion Times. The DC electrical power systems, including associated battery chargers, are not initiators to any accident sequence analyzed in the Final Safety Analysis Report (FSAR). Operation in accordance with the proposed TS ensures that the DC electrical power systems are capable of performing functions as described in the FSAR. Therefore the mitigative functions supported by the DC Power Systems will continue to provide the protection assumed by the analysis.

The relocation of preventive maintenance surveillance, and certain operating limits and actions to a newly-created, licensee-controlled TS 5.5.13, ''Battery Monitoring and Maintenance Program,'' will not challenge the ability of the DC electrical power systems to perform their design functions. The maintenance and monitoring required by current TS, which are based on industry standards, will continue to be performed. In addition, the DC Power Systems are within the scope of 10 CFR 50.65, ''Requirements for Monitoring the Effectiveness of Maintenance at Nuclear Power Plants,'' which will ensure the control of maintenance activities associated with the DC electrical power systems. The integrity of fission product barriers, plant configuration, and operating procedures as described in the FSAR will not be affected by the proposed changes.

Therefore, the proposed changes do not involve a significant increase in the probability or consequences of an accident previously evaluated.

2. Does the proposed change create the possibility of a new or different kind of accident from any accident previously evaluated?

No. The proposed changes involve restructuring the TS for the DC electrical power systems. These changes will rely upon the capability of providing the battery charger function by an alternate means to justify the proposed completion times when a normal battery charger is inoperable. The DC electrical power systems, which include the associated battery chargers, are not initiators to any accident sequence analyzed in the FSAR. Rather, the DC electrical power systems are used to supply equipment used to mitigate an accident. These mitigative functions, supported by the DC electrical power systems are not affected by these changes and they will continue to provide the protection assumed by the safety analysis described in the FSAR. There are no new types of failures or new or different kinds of accidents or transients that could be created by these changes.

Therefore, the proposed changes do not create the possibility of a new or different kind of accident from any accident previously evaluated.

3. Does the proposed change involve a significant reduction in a margin of safety?

No. The margin of safety is established through equipment design, operating parameters, and the set points at which automatic actions are initiated. The proposed changes will not adversely affect operation of plant equipment. These changes will not result in a change to the set points at which protective actions are initiated. Sufficient DC electrical system capacity is ensured to support operation of mitigation equipment. The changes associated with the new Battery Maintenance and Monitoring Program will ensure that the station batteries are maintained in a highly reliable state. The use of spare battery chargers will increase the reliability of the DC electrical systems during periods of normal battery charger inoperability. The equipment fed by the DC electrical sources will continue to provide adequate power to safety related loads in accordance with analysis assumptions. Therefore, the proposed changes do not involve a significant reduction in a margin of safety.

The NRC staff has reviewed the licensee's analysis and, based on this review, it appears that the three standards of 10 CFR 50.92(c) are satisfied. Therefore, the NRC staff proposes to determine that the amendment request involves no significant hazards consideration.

Attorney for licensee: Bryan A. Snapp, Esquire, Assoc. General Counsel, PPL Services Corporation, 2 North Ninth St., GENTW3, Allentown, PA 18101–1179.

NRC Section Chief: Richard J. Laufer.

Southern Nuclear Operating Company, Inc., Docket No. 50–364, Joseph M. Farley Nuclear Plant, Unit 2, Houston County, Alabama

Date of amendment request: January 19, 2005.

Description of amendment request: The proposed amendments would revise the Updated Final Safety Analysis Report to allow the use of fire rated electrical cable for fire areas 2–013 and 2–042 in lieu of a one hour rated electrical cable raceway fire barrier enclosure as described by Title 10 of the Code of Federal Regulations (10 CFR) Part 50, Appendix R, Section III.G.2 for protection of safe shutdown circuits.

Basis for proposed no significant hazards consideration determination: As required by 10 CFR 50.91(a), the licensee has provided its analysis of the issue of no significant hazards consideration, which is presented below:

1. Does the proposed change involve a significant increase in the probability or consequences of an accident previously evaluated?

The proposed change does not adversely affect accident initiators or precursors nor alter the design assumptions, conditions, or configuration of the facility. The proposed change does not alter or prevent the ability of structures, systems, and components (SSCs) from performing their intended function to mitigate the consequences of an initiating event within the assumed acceptance limits. This is a revision to the FSAR to use [mineral insulated] MI cable in fire areas 2–013 and 2–042. The MI cable has been tested to applicable requirements and the implementation design reflects the test results. Therefore, the probability of any accident previously evaluated is not increased. Equipment required to mitigate an accident remain capable of performing the assumed function. Therefore, the consequences of any accident previously evaluated are not increased.

Therefore, it is concluded that this change does not significantly increase the probability or consequences of an accident previously evaluated.

2. Does the proposed change create the possibility of a new or different kind of accident from any accident previously evaluated?

The proposed change will not alter the requirements or function for systems required during accident conditions. No new or different accidents result from implementing MI cable for fire areas 2–013 and 2–042. The MI cable has been tested to applicable requirements, and the implementation design reflects the test results. The use of MI cable is not a significant change in the methods governing normal plant operation. The proposed change is consistent with the safety analysis assumptions and current plant operating practice.

Therefore, the possibility of a new or different kind of accident from any accident previously evaluated is not created.

3. Does the proposed change involve a significant reduction in a margin of safety?

The proposed change does not alter the manner in which safety limits, limiting safety system settings or limiting conditions for operation are determined. The safety analysis acceptance criteria are not affected by this change. The proposed change will not result in plant operation in a configuration outside the design basis for an unacceptable period of time without mitigating actions. The proposed change does not affect systems that respond to safely shutdown the plant and to maintain the plant in a safe shutdown condition.

Therefore, it is concluded that this change does not involve a significant reduction in the margin of safety.

The NRC staff has reviewed the licensee's analysis and, based on this review, it appears that the three standards of 10 CFR 50.92(c) are satisfied. Therefore, the NRC staff proposes to determine that the amendment request involves no significant hazards consideration.

Attorney for licensee: M. Stanford Blanton, Esq., Balch and Bingham, Post Office Box 306, 1710 Sixth Avenue North, Birmingham, Alabama 35201.

NRC Section Chief: John A. Nakoski.

TXU Generation Company LP, Docket Nos. 50–445 and 50–446, Comanche Peak Steam Electric Station, Units 1 and 2, Somervell County, Texas

Date of amendment request: March 24, 2005.

Brief description of amendments: These proposed changes would revise Technical Specification (TS) 3.3.1 entitled ''Reactor Trip System Instrumentation'' (RTS) and TS 3.3.2 entitled ''Engineered Safety Feature Actuation System Instrumentation'' (ESFAS) Required Action Notes to reflect the wording in Standard Technical Specifications (STS) for plants with bypass capability per TS Task Force Traveler 418, Revision 2.

Basis for proposed no significant hazards consideration determination: As required by 10 CFR 50.91(a), the licensee has provided its analysis of the issue of no significant hazards consideration, which is presented below:

1. Do the proposed changes involve a significant increase in the probability or consequences of an accident previously evaluated?

Response: No.

[Westinghouse Topical Report] WCAP–14333 provided the technical justification for relaxing various RTS and ESFAS Instrumentation bypass test times, Completion Times, and Surveillance Frequencies located in TS 3.3.1 and 3.3.2. As such, the proposed changes do not represent a significant hazards consideration or present a reduction in the margin of safety.

The protection system performance will remain within the bounds of the previously performed accident analyses since no hardware changes are proposed. The same Reactor Trip System (RTS) Instrumentation and Engineered Safety Feature Actuation (ESFAS) Instrumentation will continue to be used and remain unchanged. The protection systems will continue to function in a manner consistent with the plant design basis. These changes to the TS do not result in a condition where the design, material, and construction standards, which were applicable prior to these changes, are altered.

The proposed changes will not modify any system interface. The proposed changes will not affect the probability of any event initiators. There will be no degradation in the performance of or an increase in the number of challenges imposed on safety-related equipment assumed to function during an accident situation. There will be no change to normal plant operating parameters or accident mitigation performance. The proposed changes will not alter any assumptions or change any mitigation actions in the radiological consequence evaluations in the FSAR [final safety analysis report].

The proposed changes do not adversely affect accident initiators or precursors nor alter the design assumptions, conditions, or configurations of the facility or change the manner in which the plant is operated and maintained. The proposed changes do not alter or prevent the ability of structures, systems, and components (SSCs) from performing their intended function to mitigate the consequences of an initiating event within the assumed acceptance limits. The proposed changes will not affect the source term, containment isolation, or radiological release assumptions used in evaluating the radiological consequences of an accident previously evaluated. The proposed changes are consistent with safety analysis assumptions and resultant consequences.

Therefore, the proposed changes do not involve a significant increase in the probability or consequences of an accident previously evaluated.

2. Do the proposed changes create the possibility of a new or different kind of accident from any accident previously evaluated?

Response: No.

There are no hardware changes nor is there any change in the method by which any safety-related plant system performs its safety function. The proposed changes will not affect the normal method of plant operation. No performance requirements will be affected or eliminated. The proposed changes will not result in physical alteration to any plant system nor will there be any change in the method by which any safety-related plant system performs its safety function.

There will be no setpoint changes or changes to accident analysis assumptions. No new accident scenarios, transient precursors, failure mechanisms, or limiting single failures are introduced as a result of these changes. There will be no adverse effect or

challenges imposed on any safety-related system as a result of these changes.

Therefore, the proposed changes do not create the possibility of a new or different kind of accident from any previously evaluated.

3. Do the proposed changes involve a significant reduction in a margin of safety?

Response: No.

The proposed changes do not affect the acceptance criteria for any analyzed event nor is there a change to any Safety Analysis Limit (SAL). There will be no effect on the manner in which safety limits, limiting safety system settings, or limiting conditions for operation are determined nor will there be any effect on those plant systems necessary to assure the accomplishment of protection functions. The radiological dose consequence acceptance criteria listed in the Standard Review Plan will continue to be met.

Redundant RTS and ESFAS trains are maintained and diversity, with regard to the signals that provide reactor trip and engineered safety features actuation, is also maintained. All signals are credited as primary or secondary and all operator actions credited in the accident analyses will remain the same. The proposed changes will not result in plant operation in a configuration outside the design basis.

Therefore, the proposed changes do not involve a reduction in the margin of safety.

The NRC staff has reviewed the licensee's analysis and, based on this review, it appears that the three standards of 10 CFR 50.92(c) are satisfied. Therefore, the NRC staff proposes to determine that the amendment request involves no significant hazards consideration.

Attorney for licensee: George L. Edgar, Esq., Morgan, Lewis and Bockius, 1800 M Street, NW., Washington, DC 20036.

NRC Section Chief: Allen G. Howe.

Virginia Electric and Power Company, Docket Nos. 50–338 and 50–339, North Anna Power Station, Units No. 1 and No. 2, Louisa County, Virginia

Date of amendment request: March 1, 2005.

Description of amendment request: The proposed changes to the Technical Specifications (TS) would revise the frequency for the Trip Actuating Device Operational Test of the P–4 Interlock Function and add Mode 4 to the Applicability for TS 3.3.2.

Basis for proposed no significant hazards consideration determination: As required by 10 CFR 50.91(a), the licensee has provided its analysis of the issue of no significant hazards consideration, which is presented below:

1. Do changes involve a significant increase in the probability or consequences of an accident previously evaluated?

The proposed changes do not significantly increase the probability or consequences of an accident previously evaluated in the UFSAR [Updated Final Safety Analysis Report]. These interlocks and the associated testing do not directly initiate an accident. The consequences of accidents previously evaluated in the UFSAR are not adversely affected by these proposed changes because the changes are made to accurately reflect the design of the ESFAS [Engineered Safety Features Actuation System] system. Therefore, the proposed changes do not involve a significant increase in the probability or consequences of an accident previously evaluated.

2. Do changes create the possibility of a new or different kind of accident from any accident previously evaluated?

The proposed changes do not create the possibility of a new or different kind of accident from any accident already evaluated in the UFSAR. No new accident scenarios, failure mechanisms, or limiting single failures are introduced as a result of the proposed changes. The proposed changes do not challenge the performance or integrity of any safety-related systems. Therefore, the proposed changes do not create the possibility of a new or different kind of accident from any accident previously evaluated.

3. Do changes involve a significant reduction in the margin of safety?

The proposed changes do not involve a significant reduction in a margin of safety. The proposed changes are made to accurately reflect the design of the ESFAS system. The nominal actuation set points specified by the Technical Specifications and the safety analysis limits assumed in the transient and accident analysis are unchanged. Therefore, the proposed changes will not significantly reduce the margin of safety as defined in the Technical Specifications.

The NRC staff has reviewed the licensee's analysis and, based on this review, it appears that the three standards of 50.92(c) are satisfied. Therefore, the NRC staff proposes to determine that the amendment request involves no significant hazards consideration.

Attorney for licensee: Ms. Lillian M. Cuoco, Esq., Senior Counsel, Dominion Resources Services, Inc., Millstone Power Station, Building 475, 5th Floor, Rope Ferry Road, Rt. 156, Waterford, Connecticut 06385.

NRC Section Chief: John A. Nakoski.

Virginia Electric and Power Company, Docket Nos. 50–280 and 50–281, Surry Power Station, Unit Nos. 1 and 2, Surry County, Virginia

Date of amendment request: March 8, 2005.

Description of amendment request: The proposed changes would revise the auxiliary feedwater (AFW) operability requirements and add an AFW allowed outage time and required actions.

Basis for proposed no significant hazards consideration determination: As required by 10 CFR 50.91(a), the licensee has provided its analysis of the issue of no significant hazards consideration, which is presented below:

1. Involve a significant increase in the probability or consequences of an accident previously evaluated.

The proposed revision to the AFW pump and flowpath requirements, as well as the revision of AFW surveillances, does not increase the probability of accidents previously evaluated since the AFW System is not required to operate until after the occurrence of the previously evaluated accidents. The change does not impact any of the initiators of the accidents. The proposed change does not involve a significant increase in the consequences of an accident previously evaluated because the AFW System will continue to perform its intended safety function for these accidents. The operation of the AFW System with the revised required action statements and added surveillances continues to meet the applicable design criteria.

2. Create the possibility of a new or different type of accident from any accident previously identified.

The safety function of the AFW System continues to be the same and is met using the same equipment. The change does not involve any plant modifications and does not revise the design of the plant or the AFW System. Operation of the AFW System with the revised required action statements and revised surveillances continues to meet the applicable design criteria and is consistent with the Surry accident analyses. Therefore, the proposed change does not introduce any new failures that could create the possibility of a new or different kind of accident from any accident previously identified.

3. Involve a significant reduction in a margin of safety.

The revised requirements for the AFW pumps and flowpaths, as well as the revision of AFW surveillances, continue to assure that the margins of safety assumed in the accidents and transients that rely upon operation of the AFW System are maintained. The proposed required action statements appropriately place the plant in a safe condition for the circumstances being addressed. Therefore, this proposed revision does not affect the margin of safety.

The NRC staff has reviewed the licensee's analysis and, based on this review, it appears that the three standards of 10 CFR 50.92(c) are satisfied. Therefore, the NRC staff proposes to determine that the amendment request involves no significant hazards consideration.

Attorney for licensee: Ms. Lillian M. Cuoco, Esq., Senior Counsel, Dominion Resources Services, Inc., Millstone Power Station, Building 475, 5th Floor, Rope Ferry Road, Rt. 156, Waterford, Connecticut 06385.

NRC Section Chief: John A. Nakoski.

Virginia Electric and Power Company, Docket Nos. 50–280 and 50–281, Surry Power Station, Unit Nos. 1 and 2, Surry County, Virginia

Date of amendment request: March 17, 2005.

Description of amendment request: The proposed change would incorporate a license condition that would permit irradiation of the fuel assemblies to a lead rod average burnup of 62,000 MWD/MTU.

Basis for proposed no significant hazards consideration determination: As required by 10 CFR 50.91(a), the licensee has provided its analysis of the issue of no significant hazards consideration, which is presented below:

1. The probability of occurrence or the consequences of an accident previously evaluated is not significantly increased.

For most of the accidents analyzed in the UFSAR [Updated Final Safety Analysis Report] (*e.g.*, LOCA [loss-of-coolant accident], Steam Line Break, etc.) the fuel design has no impact on the likelihood of initiation of an accident. Fuel performance is evaluated as a consequence of the accident. The only accident where the fuel design may have an impact on the likelihood of a Chapter 14 accident is the Fuel Handling Accident discussed in Chapter 14.4.1 of the Surry UFSAR. The activity being evaluated is a slight increase in the lead rod average burnup limit for the fuel assemblies. No change in fuel design or fuel enrichment will be required to increase the lead rod average burnup. The fuel rods at the extended lead rod average burnup will continue to meet the design limits with respect to fuel rod growth, clad fatigue, rod internal pressure and corrosion. Thus, there will be no impact on the capability to engage the fuel assemblies with the handling tools. Therefore, it is concluded that the change will not result in more than a minimal increase in the frequency of occurrence of any accident previously evaluated in the UFSAR. The impact of extending the lead rod average burnup to 62,000 MWD/MTU from 60,000 MWD/MTU on the Core Kinetics Parameter, Core Thermal-Hydraulics/DNBR [Departure from Nucleate Boiling Ratio], Specific Accident Considerations, and Radiological Consequences was considered. Based on the evaluation of these considerations, it is concluded that increasing the lead rod average burnup limit to 62,000 MWD/MTU will not result in a significant increase in the consequences of the accidents previously evaluated in the Surry UFSAR.

2. The possibility for a new or different type of accident from any accident previously evaluated is not created.

The fuel is the only component affected by the change in the burnup limit. The change does not affect the thermal hydraulic response to any transient or accident. The fuel rod design criteria [will] continue to be met at the higher burnup limit. Thus, the change does not create the possibility of an accident of a different type.

3. The margin of safety as defined in the Bases to the Surry Technical Specifications is not significantly reduced.

The operation of the Surry cores with a limited number of fuel assemblies with some fuel rods irradiated to a lead rod average burnup of 62,000 MWD/MTU will not change the performance requirements of any system or component such that any design criteria will be exceeded. The normal limits on core operation defined in the Surry Technical Specifications will remain applicable for the irradiation of the fuel to a lead rod average burnup of 62,000 MWD/MTU. Therefore, the margin of safety as defined in Bases to the Surry Technical Specifications is not significantly reduced.

The NRC staff has reviewed the licensee's analysis and, based on this review, it appears that the three standards of 10 CFR 50.92(c) are satisfied. Therefore, the NRC staff proposes to determine that the amendment request involves no significant hazards consideration.

Attorney for licensee: Ms. Lillian M. Cuoco, Esq., Senior Counsel, Dominion Resources Services, Inc., Millstone Power Station, Building 475, 5th Floor, Rope Ferry Road, Rt. 156, Waterford, Connecticut 06385.

NRC Section Chief: John A. Nakoski.

Notice of Issuance of Amendments to Facility Operating Licenses

During the period since publication of the last biweekly notice, the Commission has issued the following amendments. The Commission has determined for each of these amendments that the application complies with the standards and requirements of the Atomic Energy Act of 1954, as amended (the Act), and the Commission's rules and regulations. The Commission has made appropriate findings as required by the Act and the Commission's rules and regulations in 10 CFR Chapter I, which are set forth in the license amendment.

Notice of Consideration of Issuance of Amendment to Facility Operating License, Proposed No Significant Hazards Consideration Determination, and Opportunity for a Hearing in connection with these actions was published in the **Federal Register** as indicated.

Unless otherwise indicated, the Commission has determined that these amendments satisfy the criteria for categorical exclusion in accordance with 10 CFR 51.22. Therefore, pursuant to 10 CFR 51.22(b), no environmental impact statement or environmental assessment need be prepared for these amendments. If the Commission has prepared an environmental assessment under the special circumstances provision in 10 CFR 51.12(b) and has made a determination based on that assessment, it is so indicated.

For further details with respect to the action see (1) the applications for amendment, (2) the amendment, and (3) the Commission's related letter, Safety Evaluation and/or Environmental Assessment as indicated. All of these items are available for public inspection at the Commission's Public Document Room (PDR), located at One White Flint North, Public File Area 01F21, 11555 Rockville Pike (first floor), Rockville, Maryland. Publicly available records will be accessible from the Agencywide Documents Access and Management Systems (ADAMS) Public Electronic Reading Room on the internet at the NRC Web site, *http://www.nrc.gov/reading-rm/adams.html.* If you do not have access to ADAMS or if there are problems in accessing the documents located in ADAMS, contact the PDR Reference staff at 1 (800) 397–4209, (301) 415–4737 or by e-mail to *pdr@nrc.gov.*

Dominion Nuclear Connecticut, Inc., Docket No. 50–336, Millstone Power Station, Unit No. 2, New London County, Connecticut

Date of application for amendment: July 6, 2004, as supplemented by letters dated September 21, and December 23, 2004.

Brief description of amendment: The amendment revised the Technical Specifications (TSs) to allow a one-time change in the Appendix J, Type A, Containment Integrated Leak Rate Test from the required 10 years to 15 years.

Date of issuance: April 6, 2005.

Effective date: As of the date of issuance and shall be implemented within 30 days from the date of issuance.

Amendment No.: 285.

Facility Operating License No. DPR–65: The amendment revised the TSs.

Date of initial notice in ***Federal Register:*** February 1, 2005 (70 FR 5237). The September 21 and December 23, 2004, letters provided clarifying information that did not change the initial proposed no significant hazards consideration determination or expand the application beyond the scope of the original **Federal Register** notice.

The Commission's related evaluation of the amendment is contained in a Safety Evaluation dated April 6, 2005.

No significant hazards consideration comments received: No.

Duke Energy Corporation, et al., Docket Nos. 50–413 and 50–414, Catawba Nuclear Station, Units 1 and 2, York County, South Carolina

Date of application for amendments: April 6, 2004, as supplemented by letter dated August 5, 2004.

Brief description of amendments: The amendments revised the Technical Specifications to allow a diesel generator battery to remain operable with no more than one cell less than 1.36 Volts DC on float charge.

Date of issuance: March 29, 2005.

Effective date: As of the date of issuance and shall be implemented within 60 days from the date of issuance.

Amendment Nos.: 221 and 216.

Renewed Facility Operating License Nos. NPF–35 and NPF–52: Amendments revised the Technical Specifications.

Date of initial notice in ***Federal Register:*** September 14, 2004 (69 FR 55469). The supplement dated August 5, 2004 provided additional information that clarified the application, did not expand the scope of the application as originally noticed, and did not change the staff's original proposed no significant hazards consideration determination as published in the **Federal Register.**

The Commission's related evaluation of the amendments is contained in a Safety Evaluation dated March 29, 2005.

No significant hazards consideration comments received: No.

Duke Energy Corporation, et al., Docket Nos. 50–413 and 50–414, Catawba Nuclear Station, Units 1 and 2, York County, South Carolina

Date of application for amendments: September 28, 2004.

Brief description of amendments: The amendments eliminate the technical specification requirements to submit monthly operating reports and annual occupational radiation exposure reports.

Date of issuance: March 31, 2005.

Effective date: As of the date of issuance and shall be implemented within 30 days from the date of issuance.

Amendment Nos.: 222 and 217.

Renewed Facility Operating License Nos. NPF–35 and NPF–52: Amendments revised the Technical Specifications.

Date of initial notice in ***Federal Register:*** November 23, 2004 (69 FR 68182).

The Commission's related evaluation of the amendments is contained in a Safety Evaluation dated March 31, 2005.

No significant hazards consideration comments received: No.

Duke Energy Corporation, Docket Nos. 50–369 and 50–370, McGuire Nuclear Station, Units 1 and 2, Mecklenburg County, North Carolina

Date of application for amendments: June 3, 2003, as supplemented by letters dated July 29 and December 7, 2004, and January 18, 2005.

Brief description of amendments: The amendments revise TS 3.6.14 to allow a pressurizer enclosure hatch between the upper and lower containment volumes to be open for up to 6 hours to facilitate inspections of components such as the power operated relief valve block valves.

Date of issuance: April 5, 2005.

Effective date: As of the date of issuance and shall be implemented within 30 days from the date of issuance.

Amendment Nos.: 228/210.

Renewed Facility Operating License Nos. NPF–9 and NPF–17: Amendments revised the Technical Specifications.

Date of initial notice in ***Federal Register:*** July 22, 2003 (68 FR 43383). The supplemental letters dated July 29 and December 7, 2004, and January 18, 2005, provided clarifying information that did not change the initial proposed no significant hazards consideration determinations.

The Commission's related evaluation of the amendments is contained in a Safety Evaluation dated April 5, 2005.

No significant hazards consideration comments received: No.

Duke Energy Corporation, Docket Nos. 50–369 and 50–370, McGuire Nuclear Station, Units 1 and 2, Mecklenburg County, North Carolina

Date of application for amendments: September 20, 2004.

Brief description of amendments: The amendments deleted the Technical Specifications associated with hydrogen recombiners and hydrogen monitors.

Date of issuance: April 4, 2005.

Effective date: As of the date of issuance and shall be implemented within 60 days from the date of issuance.

Amendment Nos.: 227 and 209.

Renewed Facility Operating License Nos. NPF–9 and NPF–17: Amendments revised the Technical Specifications.

Date of initial notice in ***Federal Register:*** February 1, 2005 (70 FR 5239)

The Commission's related evaluation of the amendments is contained in a Safety Evaluation dated April 4, 2005.

No significant hazards consideration comments received: No.

Duke Energy Corporation, Docket Nos. 50–369 and 50–370, McGuire Nuclear Station, Units 1 and 2, Mecklenburg County, North Carolina

Date of application for amendments: September 28, 2004.

Brief description of amendments: The amendments eliminate the technical specification requirements to submit monthly operating reports and annual occupational radiation exposure reports.

Date of issuance: March 31, 2005.

Effective date: As of the date of issuance and shall be implemented within 30 days from the date of issuance.

Amendment Nos.: 226 and 208.

Renewed Facility Operating License Nos. NPF–9 and NPF–17: Amendments revised the Technical Specifications.

Date of initial notice in ***Federal Register:*** November 23, 2004 (69 FR 68182).

The Commission's related evaluation of the amendments is contained in a Safety Evaluation dated March 31, 2005.

No significant hazards consideration comments received: No.

Duke Energy Corporation, Docket Nos. 50–269, 50–270, and 50–287, Oconee Nuclear Station, Units 1, 2, and 3, Oconee County, South Carolina

Date of application of amendments: October 16, 2003, as supplemented by letters dated May 11, 2004, and January 10, 2005.

Brief description of amendments: The amendments revised the Technical Specification (TS) 3.4.9 and the associated Bases to change the minimum pressurizer heater capacity from 126 kW to 400 kW to correct a non-conservative TS associated with a pressurizer design-basis deficiency.

Date of Issuance: March 28, 2005.

Effective date: As of the date of issuance and shall be implemented within 90 days from the date of issuance.

Amendment Nos.: 343, 345, & 344.

Renewed Facility Operating License Nos. DPR–38, DPR–47, and DPR–55: Amendments revised the Technical Specifications.

Date of initial notice in ***Federal Register:*** January 20, 2004 (69 FR 2740).

The supplements dated May 11, 2004, and January 10, 2005, provided additional information that clarified the application, did not expand the scope of the application as originally noticed, and did not change the staff's original proposed no significant hazards consideration determination as published in the **Federal Register** on January 20, 2004 (69 FR 2740).

The Commission's related evaluation of the amendments is contained in a Safety Evaluation dated March 28, 2005.

No significant hazards consideration comments received: No.

Duke Energy Corporation, Docket Nos. 50–269, 50–270, and 50–287, Oconee Nuclear Station, Units 1, 2, and 3, Oconee County, South Carolina

Date of application of amendments: September 20, 2004.

Brief description of amendments: The amendments delete the Technical Specifications associated with hydrogen monitors.

Date of Issuance: April 4, 2005.

Effective date: As of the date of issuance and shall be implemented within 60 days after completion of the Spring 2005 refueling outage for Unit 1.

Amendment Nos.: 344, 346 & 345.

Renewed Facility Operating License Nos. DPR–38, DPR–47, and DPR–55: Amendments revised the Technical Specifications.

Date of initial notice in ***Federal Register:*** February 1, 2005 (70 FR 5239).

The Commission's related evaluation of the amendments is contained in a Safety Evaluation dated April 4, 2005.

No significant hazards consideration comments received: No.

Energy Northwest, Docket No. 50–397, Columbia Generating Station, Benton County, Washington

Date of application for amendment: August 5, 2004.

Brief description of amendment: This amendment revises Technical Specification Section 5.5.12, ''Primary Containment Integrity,'' to allow a one-time extension of its Appendix J, Type A, Containment Integrated Leak Rate Test interval from the current 10-year interval to a proposed 15-year interval.

Date of issuance: April 12, 2005.

Effective date: April 12, 2005, and shall be implemented within 30 days.

Amendment No.: 191.

Facility Operating License No. NPF–21: The amendment revised the Technical Specifications.

Date of initial notice in ***Federal Register:*** August 31, 2004 (69 FR 53102).

The Commission's related evaluation of the amendment is contained in a Safety Evaluation dated April 12, 2005.

No significant hazards consideration comments received: No.

Entergy Nuclear Operations, Inc., Docket No. 50–286, Indian Point Nuclear Generating Unit No. 3, Westchester County, New York

Date of application for amendment: June 24, 2004.

Brief description of amendment: The amendment modifies Technical Specification (TS) requirements to adopt the provisions of Industry/TS Task Force (TSTF) change TSTF–359, ''Increased Flexibility in Mode Restraints.''

Date of issuance: April 6, 2005.

Effective date: As of the date of issuance and shall be implemented within 60 days.

Amendment No.: 226.

Facility Operating License No. DPR–64: Amendment revised the Technical Specifications.

Date of initial notice in ***Federal Register:*** October 26, 2004 (69 FR 62474).

The Commission's related evaluation of the amendment is contained in a Safety Evaluation dated April 6, 2005.

No significant hazards consideration comments received: No.

Entergy Nuclear Operations, Inc., Docket No. 50–333, James A. FitzPatrick Nuclear Power Plant, Oswego County, New York

Date of application for amendment: December 30, 2004.

Brief description of amendment: The amendment changes the frequency for Technical Specification surveillance requirement (SR) 3.1.4.2, which verifies each tested control rod scram time is within limits with reactor steam dome pressure ≥ 800 psig. Specifically, the SR frequency increases from 120 days to 200 days of cumulative operation in MODE 1 (power operation).

Date of issuance: April 5, 2005.

Effective date: As of the date of issuance to be implemented within 30 days.

Amendment No.: 283.

Facility Operating License No. DPR–59: Amendment revised the Technical Specifications.

Date of initial notice in ***Federal Register:*** February 1, 2005 (70 FR 5241).

The Commission's related evaluation of the amendment is contained in a Safety Evaluation dated April 5, 2005.

No significant hazards consideration comments received: No.

Entergy Nuclear Operations, Inc., Docket No. 50–293, Pilgrim Nuclear Power Station, Plymouth County, Massachusetts

Date of application for amendment: September 2, 2004.

Brief description of amendment: The amendment revised Technical Specification (TS) 4.5.B.2.2 to change the surveillance requirement frequency for air testing the drywell and suppression pool spray headers and nozzles from ''once per 5 years'' to ''following maintenance that could result in nozzle blockage.''

Date of issuance: April 12, 2005.

Effective date: As of the date of issuance, and shall be implemented within 60 days.

Amendment No.: 214.

Facility Operating License No. DPR–35: The amendment revised the TSs.

Date of initial notice in ***Federal Register:*** December 21, 2004 (69 FR 76490).

The Commission's related evaluation of the amendment is contained in a Safety Evaluation dated April 12, 2005.

No significant hazards consideration comments received: No.

Exelon Generation Company, LLC, Docket Nos. 50–352 and 50–353, Limerick Generating Station, Units 1 and 2, Montgomery County, Pennsylvania

Date of application for amendments: April 13, 2004.

Brief description of amendments: The amendments eliminate the requirements in Technical Specifications (TSs) associated with hydrogen recombiners, and hydrogen and oxygen monitors.

Date of issuance: April 13, 2005.

Effective date: As of the date of issuance and shall be implemented within 60 days.

Amendment Nos.: 173 and 135.

Facility Operating License Nos. NPF–39 and NPF–85. The amendments revised the TSs.

Date of initial notice in ***Federal Register:*** June 8, 2004 (69 FR 32073).

The Commission's related evaluation of the amendments is contained in a Safety Evaluation dated April 13, 2005.

No significant hazards consideration comments received: No.

Exelon Generation Company, LLC, and PSEG Nuclear LLC, Docket Nos. 50–277 and 50–278, Peach Bottom Atomic Power Station, Units 2 and 3, York and Lancaster Counties, Pennsylvania

Date of application for amendments: April 30, 2004.

Brief description of amendments: The amendments modify technical specification (TS) requirements to adopt the provisions of Industry/TS Task Force (TSTF) change TSTF–359, ''Increased Flexibility in Mode Restraints.''

Date of issuance: April 11, 2005.

Effective date: As of the date of issuance, to be implemented within 180 days.

Amendment Nos.: 252 and 255.

Renewed Facility Operating License Nos. DPR–44 and DPR–56: The amendments revised the Technical Specifications.

*Date of initial notice in **Federal Register:*** October 12, 2004 (69 FR 60681).

The Commission's related evaluation of the amendments is contained in a Safety Evaluation dated April 11, 2005.

No significant hazards consideration comments received: No.

FirstEnergy Nuclear Operating Company, Docket No. 50–440, Perry Nuclear Power Plant, Unit 1, Lake County, Ohio

Date of application for amendment: August 31, 2004.

Brief description of amendment: The amendment revised Technical Specification 3.4.1, ''Recirculation Loops Operating,'' associated with single recirculation loop operation by incorporating limits for the linear heat generation rate fuel thermal limit into the limiting condition for operation.

Date of issuance: March 31, 2005.

Effective date: As of the date of issuance and shall be implemented within 90 days.

Amendment No.: 134.

Facility Operating License No. NPF–58: This amendment revised the Technical Specifications.

*Date of initial notice in **Federal Register:*** January 4, 2005 (70 FR 401).

The Commission's related evaluation of the amendment is contained in a Safety Evaluation dated March 31, 2005.

No significant hazards consideration comments received: No.

Florida Power Corporation, et al., Docket No. 50–302, Crystal River Unit No. 3 Nuclear Generating Plant, Citrus County, Florida

Date of application for amendment: September 21, 2004.

Brief description of amendment: The amendment deletes the Technical Specifications associated with hydrogen monitors.

Date of issuance: April 5, 2005.

Effective date: As of the date of issuance and shall be implemented within 60 days of issuance.

Amendment No.: 216.

Facility Operating License No. DPR–72: Amendment revises the Technical Specifications.

*Date of initial notice in **Federal Register:*** February 1, 2005 (70 FR 5245).

The Commission's related evaluation of the amendment is contained in a Safety Evaluation dated April 5, 2005.

No significant hazards consideration comments received: No.

Nuclear Management Company, LLC, Docket No. 50–305, Kewaunee Nuclear Power Plant, Kewaunee County, Wisconsin

Date of application for amendment: July 6, 2004, as supplemented January 27, 2005.

Brief description of amendment: The amendment relocates the calibration requirement of Table TS 4.1–1, Item 22, ''Accumulator Level and Pressure,'' and the surveillance requirements of Table TS 4.1–1, Item 25, ''Portable Radiation Survey Instruments,'' from the Technical Specifications to licensee-controlled documents.

Date of issuance: April 6, 2005.

Effective date: As of the date of issuance and shall be implemented within 60 days.

Amendment No.: 182.

Facility Operating License No. DPR–43: Amendment revised the Technical Specifications.

*Date of initial notice in **Federal Register:*** August 31, 2004 (69 FR 53112).

The supplement dated January 27, 2005, provided additional information that clarified the application, did not expand the scope of the application as originally noticed, and did not change the Nuclear Regulatory Commission staff's original proposed no significant hazards consideration. The Commission's related evaluation of the amendment is contained in a Safety Evaluation dated April 6, 2005.

No significant hazards consideration comments received: No.

PSEG Nuclear LLC, Docket Nos. 50–272 and 50–311, Salem Nuclear Generating Station, Unit Nos. 1 and 2, Salem County, New Jersey

Date of application for amendments: July 23, 2004, as supplemented January 6, 2005.

Brief description of amendments: The amendments modified the Technical Specification (TS) definition OPERABLE with respect to requirements for availability of normal and emergency power. Additionally, required actions for shutdown power TSs were modified.

Date of issuance: April 1, 2005.

Effective date: As of date of issuance, to be implemented within 60 days.

Amendment Nos.: 264 and 246.

Facility Operating License Nos. DPR–70 and DPR–75: The amendments revised the TSs.

*Date of initial notice in **Federal Register:*** March 1, 2005 (70 FR 9983).

The Commission's related evaluation of the amendments is contained in a Safety Evaluation dated April 1, 2005.

No significant hazards consideration comments received: Comments received were addressed in the Safety Evaluation dated April 1, 2005.

R.E. Ginna Nuclear Power Plant, LLC, Docket No. 50–244, R.E. Ginna Nuclear Power Plant, Wayne County, New York

Date of application for amendment: July 26, 2004, as supplemented on March 7, 2005.

Brief description of amendment: The amendment revised the Technical Specifications by eliminating the requirements to provide the NRC monthly operating reports and annual occupational radiation exposure reports.

Date of issuance: April 13, 2005.

Effective date: As of the date of issuance to be implemented within 60 days.

Amendment No.: 89.

Renewed Facility Operating License No. DPR–18: Amendment revised the Technical Specifications and/or License.

*Date of initial notice in **Federal Register:*** October 12, 2004 (69 FR 60685). The supplemental letter provided additional information that clarified the application, did not expand the scope of the application as originally noticed, and did not change the staff's original proposed no significant hazards consideration determination.

The Commission's related evaluation of the amendment is contained in a Safety Evaluation dated April 13, 2005.

No significant hazards consideration comments received: No.

Southern California Edison Company, et al., Docket Nos. 50–361 and 50–362, San Onofre Nuclear Generating Station, Units 2 and 3, San Diego County, California

Date of application for amendments: December 10, 2004.

Brief description of amendments: These amendments delete the Technical Specifications associated with hydrogen monitors.

Date of issuance: March 29, 2005.

Effective date: March 29, 2005, to be implemented within 60 days of issuance.

Amendment Nos.: Unit 2—194; Unit 3—185.

Facility Operating License Nos. NPF–10 and NPF–15: The amendments revised the Technical Specifications.

*Date of initial notice in **Federal Register:*** January 18, 2005 (70 FR 2896).

The Commission's related evaluation of the amendments is contained in a Safety Evaluation dated March 29, 2005.

No significant hazards consideration comments received: No.

Southern Nuclear Operating Company, Inc., et al., Docket Nos. 50–424 and 50–425, Vogtle Electric Generating Plant, Units 1 and 2, Burke County, Georgia

Dates of application for amendments: February 26 and April 28, 2008, as supplemented by letters dated July 8 and October 20, 2004.

Brief description of amendments: The amendments revised Technical Specification (TS) Section 5.6.6, Reactor Coolant System (RCS) Pressure Temperature Limits Report (PTLR), to facilitate future licensee-controlled changes to the PTLR. The changes include a revised PTLR that provides new heatup and cooldown limits and Cold Overpressure Protection System (COPS) set points, and to recalculate the minimum size of the pressurizer power operated relief valve orifice of the RCS vent. In addition, the changes relocate the COPS arming temperature to the PTLR, and lower the COPS arming temperature from 350 °F to 220 °F. The licensee also included TS bases changes to support the changes to the TSs.

Date of issuance: March 28, 2005.

Effective date: As of the date of issuance and shall be implemented within 30 days from the date of issuance.

Amendment Nos.: 136 (Unit 1) and 115 (Unit 2).

Facility Operating License Nos. NPF–68 and NPF–81: Amendments revised the Technical Specifications.

Date of initial notice in ***Federal Register:*** April 13, 2004 (69 FR 19575) and April 22, 2004 (69 FR 34707).

The supplements dated July 8 and October 20, 2004, provided additional information that clarified the application, did not expand the scope of the application as originally noticed, and did not change the staff's original proposed no significant hazards consideration determination as published in the **Federal Register**.

The Commission's related evaluation of the amendments is contained in a Safety Evaluation dated March 28, 2005.

No significant hazards consideration comments received: No.

Tennessee Valley Authority, Docket Nos. 50–327 and 50–328, Sequoyah Nuclear Plant, Units 1 and 2, Hamilton County, Tennessee

Date of application for amendments: October 14, 2004.

Brief description of amendments: The amendments eliminate the technical specification requirements to submit monthly operating reports and annual occupational radiation exposure reports.

Date of issuance: April 5, 2005.

Effective date: As of the date of issuance and shall be implemented within 45 days.

Amendment Nos.: 300 and 289.

Facility Operating License Nos. DPR–77 and DPR–79: Amendments revised the technical specifications.

Date of initial notice in ***Federal Register:*** February 1, 2005 (70 FR 5250).

The Commission's related evaluation of the amendments is contained in a Safety Evaluation dated April 5, 2005.

No significant hazards consideration comments received: No.

Tennessee Valley Authority, Docket No. 50–390, Watts Bar Nuclear Plant, Unit 1, Rhea County, Tennessee

Date of application for amendment: November 8, 2004.

Brief description of amendment: The amendment eliminates the requirements in Technical Specifications to submit monthly operating reports and annual occupational radiation exposure reports.

Date of issuance: March 21, 2005.

Effective date: As of the date of issuance and shall be implemented within 45 days of issuance.

Amendment No.: 57.

Facility Operating License No. NPF–90: Amendment revises the Technical Specifications.

Date of initial notice in ***Federal Register:*** January 18, 2005 (70 FR 2902).

The Commission's related evaluation of the amendment is contained in a Safety Evaluation dated March 21, 2005.

No significant hazards consideration comments received: No.

Virginia Electric and Power Company, Docket Nos. 50–338 and 50–339, North Anna Power Station, Units 1 and 2, Louisa County, Virginia

Date of application for amendment: September 8, 2004.

Brief description of amendment: These amendments delete the Technical Specifications associated with hydrogen recombiners and hydrogen monitors.

Date of issuance: March 22, 2005.

Effective date: As of the date of issuance and shall be implemented within 60 days from the date of issuance.

Amendment Nos.: 238 and 219.

Renewed Facility Operating License Nos. NPF–4 and NPF–7: Amendments change the Technical Specifications.

Date of initial notice in ***Federal Register:*** January 18, 2005 (70 FR 2902).

The Commission's related evaluation of the amendments is contained in a Safety Evaluation dated March 22, 2005.

No significant hazards consideration comments received: No.

Virginia Electric and Power Company, et al., Docket Nos. 50–280 and 50–281, Surry Power Station, Units 1 and 2, Surry County, Virginia

Date of application for amendments: June 23, 2004.

Brief Description of amendments: These amendments revise the Technical Specifications Section 3.16, ''Emergency Power System,'' requirements for verifying the operability of the remaining emergency diesel generator (EDG) when either unit's dedicated EDG or the shared backup EDG is inoperable.

Date of issuance: April 5, 2005.

Effective date: As of the date of issuance, and shall be implemented within 30 days.

Amendment Nos.: 241 and 240.

Renewed Facility Operating License Nos. DPR–32 and DPR–37: Amendments change the Technical Specifications.

Date of initial notice in ***Federal Register:*** August 19, 2004 (69 FR 51490).

The Commission's related evaluation of the amendments is contained in a Safety Evaluation dated April 5, 2005.

No significant hazards consideration comments received: No.

Virginia Electric and Power Company, et al., Docket Nos. 50–280 and 50–281, Surry Power Station, Units 1 and 2, Surry County, Virginia

Date of application for amendments: December 21, 2004.

Brief Description of amendments: These amendments revise the Technical Specifications by eliminating the requirements to submit monthly operating reports and occupational radiation exposure reports.

Date of issuance: March 22, 2005.

Effective date: March 22, 2005.

Amendment Nos.: 240 and 239.

Renewed Facility Operating License Nos. DPR–32 and DPR–37: Amendments change the Technical Specifications.

Date of initial notice in ***Federal Register:*** January 18, 2005 (70 FR 2903).

The Commission's related evaluation of the amendments is contained in a Safety Evaluation dated March 22, 2005.

No significant hazards consideration comments received: No.

Dated at Rockville, Maryland, this 18th day of April 2005.

For the Nuclear Regulatory Commission.

Ledyard B. Marsh,

Director, Division of Licensing Project Management, Office of Nuclear Reactor Regulation.

[FR Doc. 05–8166 Filed 4–25–05; 8:45 am]

BILLING CODE 7590–01–P

OFFICE OF PERSONNEL MANAGEMENT

Excepted Service

AGENCY: Office of Personnel Management.

ACTION: Notice.

SUMMARY: This gives notice of OPM decisions granting authority to make appointments under Schedules A, B and C in the excepted service as required by 5 CFR 6.6 and 213.103.

FOR FURTHER INFORMATION CONTACT: Quasette Crowner, Chief, Executive Resources Group, Center for Leadership and Executive Resources Policy, Division for Strategic Human Resources Policy, 202–606–8046.

SUPPLEMENTARY INFORMATION: Appearing in the listing below are the individual authorities established under Schedules A, B and C between March 1, 2005 and March 31, 2005. Future notices will be published on the fourth Tuesday of each month, or as soon as possible thereafter. A consolidated listing of all authorities as of June 30 is published each year.

Schedule A

No Schedule A appointments during March 2005.

Schedule B

No Schedule B appointments during March 2005.

Schedule C

The following Schedule C appointments were approved for March 2005:

Section 213.3303 Executive Office of the President

Office of Management and Budget

BOGS00153 Special Assistant to the Director, Office of Management and Budget. Effective March 14, 2005.

BOSL00003 Special Assistant to the Administrator, Office of Information and Regulatory Affairs. Effective March 23, 2005.

Office of National Drug Control Policy

QQGS00031 Legislative Analyst to the Associate Director, Legislative Affairs. Effective March 02, 2005.

QQGS00034 Policy Analyst to the Associate Deputy Director, State and Local Affairs. Effective March 09, 2005.

QQGS00040 Legislative Analyst to the Associate Director, Legislative Affairs. Effective March 15, 2005.

Section 213.3304 Department of State

DSGS60817 Legislative Management Officer to the Assistant Secretary for Legislative and Intergovernmental Affairs. Effective March 02, 2005.

DSGS60820 Public Affairs Specialist to the Assistant Secretary for Public Affairs. Effective March 04, 2005.

DSGS60943 Special Assistant to the Assistant Secretary for Public Affairs. Effective March 04, 2005.

DSGS60944 Protocol Assistant (Gifts) to the Chief of Protocol. Effective March 07, 2005.

DSGS60945 Foreign Affairs Officer (Visits) to the Chief of Protocol. Effective March 07, 2005.

DSGS60947 Staff Assistant (Visits) to the Supervisory Protocol Officer (Visits). Effective March 07, 2005.

DSGS60948 Legislative Management Officer to the Assistant Secretary for Legislative and Intergovernmental Affairs. Effective March 11, 2005.

DSGS60819
Public Affairs Specialist to the Assistant Secretary for Public Affairs. Effective March 15, 2005.

DSGS60950 Foreign Affairs Officer to the Assistant Secretary for Western Hemispheric Affairs. Effective March 30, 2005.

Section 213.3305 Department of the Treasury

DYGS00250 Director, Public Affairs to the Deputy Assistant Secretary (Public Affairs). Effective March 08, 2005.

DYGS00380 Deputy to the Assistant Secretary (Legislative Affairs) to the Assistant Secretary (Deputy Under Secretary) Legislative Affairs. Effective March 08, 2005.

DYGS00452 Special Assistant to the Director, Public Affairs. Effective March 11, 2005.

DYGS60418 Special Assistant to the Executive Secretary. Effective March 11, 2005.

DYGS00453 Staff Assistant to the Assistant Secretary (Public Affairs). Effective March 17, 2005.

DYGS60362 Special Assistant to the Assistant Secretary (Financial Institutions). Effective March 17, 2005.

DYGS00454 Director, Travel Operations to the Assistant Secretary (Management) and Chief Financial Officer. Effective March 28, 2005.

Section 213.3306 Department of Defense

DDGS16865 Staff Assistant to the Special Assistant to the Secretary of Defense for White House Liaison. Effective March 02, 2005.

DDGS16857 Writer-Editor to the Deputy Assistant Secretary of Defense (Internal Communications). Effective March 04, 2005.

DDGS16863 Defense Fellow to the Special Assistant to the Secretary of Defense for White House Liaison. Effective March 15, 2005.

DDGS16868 Defense Fellow to the Special Assistant to the Secretary of Defense for White House Liaison. Effective March 18, 2005.

DDGS16869 Staff Assistant to the Executive Director, Employer Support of the Guard and Reserve. Effective March 18, 2005.

Section 213.3307 Department of the Army

DWGS60010 Special Assistant to the Army General Counsel. Effective March 10, 2005.

DWGS60011 Special Assistant to the Principal Deputy Assistant of Army (Alt)/Director for Iraq Reconstruction and Program Management. Effective March 14, 2005.

DWGS60014 Confidential Assistant to the General Counsel. Effective March 18, 2005.

Section 213.3308 Department of the Navy

DNGS00064 Confidential Assistant to the Assistant Secretary of Navy (Installations and Environment). Effective March 17, 2005.

Section 213.3310 Department of Justice

DJGS00194 Senior Counsel to the Assistant Attorney General (Legal Policy). Effective March 04, 2005.

DJGS00049 Special Assistant to the Administrator of Juvenile Justice and Delinquency Prevention. Effective March 08, 2005.

DJGS00053 Special Assistant to the Director, Alcohol, Tobacco, Firearms, and Explosives. Effective March 08, 2005.

DJGS00138 Special Assistant to the Assistant Attorney General Tax Division. Effective March 10, 2005.

DJGS00154 Speech Writer to the Director, Office of Public Affairs. Effective March 11, 2005.

DJGS00028 Director of Congressional Affairs to the Administrator, Drug Enforcement Administration. Effective March 15, 2005.

DJGS00085 Speech Writer to the Director, Office of Public Affairs. Effective March 16, 2005.

DJGS00141 Special Assistant to the Assistant Attorney General, Criminal Division. Effective March 17, 2005.

DJGS00342 White House Liaison to the Attorney General. Effective March 24, 2005.

DJGS00400 Public Affairs Specialist to the United States Attorney, Western District, Virginia. Effective March 25, 2005.

Section 213.3311 Department of Homeland Security

DMGS00332 Press Assistant to the Director of Communications, Office of Domestic Preparedness, State and Local Government Coordination and Preparedness. Effective March 04, 2005.

DMGS00326 Special Assistant to the General Counsel. Effective March 10, 2005.

DMGS00330 Special Assistant to the Ombudsman. Effective March 10, 2005.

DMGS00333 Staff Assistant to the Director, National Capital Region Coordination. Effective March 10, 2005.

DMGS00334 Deputy Director of Communications to the Chief of Staff. Effective March 11, 2005.

DMGS00336 Special Assistant to the Chief of Staff. Effective March 15, 2005.

DMGS00335 Director of Scheduling and Advance to the Chief of Staff. Effective March 22, 2005.

DMGS00337 Assistant Commissioner for Legislative Affairs to the Commissioner, Customs and Border Protection. Effective March 23, 2005.

DMGS00338 Confidential Assistant to the Under Secretary for Information Analysis and Infrastructure Protection. Effective March 24, 2005.

DMGS00342 White House Liaison to the Chief of Staff. Effective March 29, 2005.

DMGS00339 Writer-Editor (Senior Speechwriter) to the Director of Speechwriting. Effective March 31, 2005.

Section 213.3312 Department of the Interior

DIGS61036 Associate Director for Communications to the Executive Director, Take Pride In America. Effective March 09, 2005.

DIGS61037 Special Assistant to the Assistant Secretary for Water and Science. Effective March 10, 2005.

DIGS05003 Special Assistant to the Deputy Director, Bureau of Land Management. Effective March 15, 2005.

Section 213.3313 Department of Agriculture

DAGS00777 Special Assistant to the Chief, Natural Research Conservation Service. Effective March 02, 2005.

DAGS00779 Confidential Assistant to the Executive Director, Center for Nutrition Policy and Promotion. Effective March 02, 2005.

DAGS00780 Confidential Assistant to the Administrator, Foreign Agricultural Service. Effective March 02, 2005.

DAGS00778 Director of Faith-Based and Community Initiatives to the Secretary. Effective March 04, 2005.

DAGS00781 Staff Assistant to the Administrator, Food Safety and Inspection Service. Effective March 18, 2005.

DAGS00782 Staff Assistant to the Associate Administrator for Management. Effective March 18, 2005.

DAGS00783 Special Assistant to the Under Secretary for Food Nutrition and Consumer Services. Effective March 24, 2005.

DAGS00784 Special Assistant to the Assistant Secretary for Congressional Relations. Effective March 24, 2005.

DAGS00785 Special Assistant to the Administrator to the Under Secretary for Marketing and Regulatory Programs. Effective March 24, 2005.

Section 213.3314 Department of Commerce

DCGS00507 Confidential Assistant to the Associate Director for Communications. Effective March 02, 2005.

DCGS60387 Confidential Assistant to the Executive Director for Trade Promotion and Outreach. Effective March 02, 2005.

DCGS60624 Senior Policy Advisor to the Assistant to the Secretary and Director, Office of Policy and Strategic Planning. Effective March 02, 2005.

DCGS60694 Chief, Congressional Affairs to the Associate Director for Communications. Effective March 02, 2005.

DCGS00422 Confidential Assistant to the Executive Director for Trade Promotion and Outreach. Effective March 04, 2005.

DCGS60440 Special Assistant to the Director Office of White House Liaison. Effective March 04, 2005.

DCGS60463 Confidential Assistant to the Deputy Under Secretary and Deputy Director of the U.S. Patent and Trademark Office. Effective March 04, 2005.

DCGS60618 Special Assistant to the Deputy Under Secretary and Deputy Director of the U.S. Patent and Trademark Office. Effective March 04, 2005.

DCGS60652 Confidential Assistant to the Executive Director for Trade Promotion and Outreach. Effective March 04, 2005.

DCGS00546 Special Assistant to the Deputy Assistant Secretary for Europe. Effective March 11, 2005.

DCGS00689 Confidential Assistant to the Assistant Secretary for Market Access and Compliance. Effective March 11, 2005.

DCGS60371 Policy Advisor to the Chief of Staff. Effective March 11, 2005.

DCGS60396 Legislative Affairs Specialist to the Director, Office of Legislative Affairs. Effective March 11, 2005.

DCGS60467 Confidential Assistant to a Public Affairs Specialist. Effective March 11, 2005.

DCGS60424 Legislative Affairs Specialist to the Director, Office of Legislative Affairs. Effective March 14, 2005.

DCGS00529 Policy Advisor to the Under Secretary, Oceans and Atmosphere (Administrator National and Oceanic and Atmospheric Administration). Effective March 16, 2005.

DCGS60604 Director, Office of Technology and E-Commerce to the Assistant Secretary for Manufacturing and Services. Effective March 16, 2005.

DCGS00306 Confidential Assistant to the Assistant Secretary for Congressional and Intergovernmental Affairs. Effective March 17, 2005.

DCGS60299 Confidential Assistant to the Assistant Secretary for Economic Development. Effective March 17, 2005.

DCGS60681 Speechwriter to the Under Secretary of Commerce for Intellectual Property and Director of the U.S. Patent and Trademark Office. Effective March 17, 2005.

DCGS60173 Senior Advisor to the Assistant Secretary for Economic Development. Effective March 30, 2005.

DCGS00628 Confidential Assistant to the Director of Public Affairs. Effective March 31, 2005.

Section 213.3315 Department of Labor

DLGS60043 Special Assistant to the Assistant Secretary for Occupational Safety and Health. Effective March 15, 2005.

DLGS60079 Special Assistant to the Assistant Secretary for Policy. Effective March 15, 2005.

DLGS60219 Staff Assistant to the Director of Operations. Effective March 15, 2005.

DLGS60239 Staff Assistant to the Executive Assistant to the Secretary. Effective March 15, 2005.

DLGS60137 Staff Assistant to the Executive Secretary. Effective March 17, 2005.

DLGS60094 Special Assistant to the Assistant Secretary for Public Affairs. Effective March 22, 2005.

DLGS60221 Special Assistant to the Assistant Secretary for Public Affairs. Effective March 22, 2005.

Section 213.3316 Department of Health and Human Services

DHGS60009 Special Assistant to the Assistant Secretary for Public Health Emergency Preparedness. Effective March 10, 2005.

DHGS60362 Director, Congressional Liaison Office to the Assistant Secretary for Legislation. Effective March 11, 2005.

DHGS60013 Confidential Assistant (Scheduling) to the Director of Scheduling. Effective March 16, 2005.

DHGS60018 Deputy Director, Scheduling and Advance to the Director of Scheduling. Effective March 16, 2005.

DHGS60695 Confidential Assistant (Briefing Book and Advance) to the Director of Scheduling. Effective March 17, 2005.

DHGS60008 Senior Advisor to the Assistant Secretary for Children and Families. Effective March 18, 2005.

DHGS60363 Director, Congressional Liaison Office to the Assistant Secretary for Legislation. Effective March 18, 2005.

DHGS60004 Director, Secretary's Prevention Initiatives to the Assistant Secretary, Health. Effective March 30, 2005.

DHGS60015 Deputy Director, Center for Faith Based and Community Initiatives to the Director, Center for Faith Based and Community Initiatives. Effective March 30, 2005.

Section 213.3317 Department of Education

DBGS00378 Confidential Assistant to the Deputy Assistant Secretary. Effective March 3, 2005.

DBGS00376 Director, Scheduling and Advance Staff to the Chief of Staff. Effective March 8, 2005.

DBGS00377 Confidential Assistant to the Deputy Assistant Secretary. Effective March 15, 2005.

DBGS00379 Confidential Assistant to the Assistant Secretary for Postsecondary Education. Effective March 18, 2005.

DBGS00381 Confidential Assistant to the Deputy General Counsel for Departmental and Legislative Service. Effective March 23, 2005.

DBGS00382 Confidential Assistant to the Press Secretary. Effective March 18, 2005.

Section 213.3318 Environmental Protection Agency

EPGS05025 Program Assistant to the Assistant Administrator for Environmental Information. Effective March 15, 2005.

EPGS03606 Press Secretary to the Associate Assistant Administrator for Public Affairs. Effective March 22, 2005.

EPGS05024 Deputy Associate Administrator to the Deputy Chief of Staff (Operations). Effective March 23, 2005.

EPGS05023 Audio Visual Producer to the Deputy Chief of Staff (Operations). Effective March 29, 2005.

Section 213.3325 United States Tax Court

JCGS60057 Secretary (Confidential Assistant) to the Chief Judge. Effective March 2, 2005.

Section 213.3327 Department of Veterans Affairs

DVGS60011 Special Assistant (White House Liaison) to the Assistant Secretary for Public and Intergovernmental Affairs. Effective March 7, 2005.

Section 213.3331 Department of Energy

DEGS00458 Special Assistant to the Secretary, Department of Energy. Effective March 18, 2005.

DEGS00459 Associate Deputy Assistant Secretary to the Assistant Secretary for Congressional and Intergovernmental Affairs. Effective March 18, 2005.

DEGS00462 Special Assistant to the Assistant Secretary of Energy (Environmental Management). Effective March 18, 2005.

DEGS00461 Senior Advisor to the Deputy Secretary of Energy. Effective March 24, 2005.

DEGS00453 Special Assistant to the Director, Office of Scheduling and Advance. Effective March 29, 2005.

Section 213.3331 Federal Energy Regulatory Commission

DRGS60005 Intergovernmental Affairs Specialist to the Deputy Director, External Affairs. Effective March 25, 2005.

Section 213.3332 Small Business Administration

SBGS00582 Senior Advisor to the Deputy Administrator. Effective March 2, 2005.

SBGS00583 Assistant Administrator to the Associate Administrator for Policy. Effective March 17, 2005.

SBGS00584 Policy Analyst to the Associate Administrator for Policy. Effective March 17, 2005.

Section 213.3337 General Services Administration

GSGS60024 Confidential Assistant to the Chief of Staff. Effective March 4, 2005.

GSGS00160 Congressional Relations Assistant to the Associate Administrator for Congressional and Intergovernmental Affairs. Effective March 17, 2005.

GSGS00161 Public Affairs Assistant to the Deputy Associate Administrator for Communications. Effective March 22, 2005.

Section 213.3343 Farm Credit Administration

FLOT00056 Special Assistant to the Member, Farm Credit Administration Board. Effective March 14, 2005.

Section 213.3348 National Aeronautics and Space Administration

NNGS00141 Executive Assistant to the Chief Financial Officer. Effective March 4, 2005.

NNGS01420 Congressional Relations Specialist to the Assistant Administrator for Legislative Affairs. Effective March 18, 2005.

NNGS01430 Executive Assistant to the General Counsel. Effective March 18, 2005.

NNGS01440 Strategic Communication Specialist to the Assistant Administrator for Public Affairs. Effective March 18, 2005.

Section 213.3355 Social Security Administration

SZGS00016 Special Assistant to the Chief of Staff. Effective March 22, 2005.

SZGS00014 Special Assistant to the Deputy Commissioner of Social Security. Effective March 23, 2005.

Section 213.3373 Trade and Development Agency

TDGS60002 Congressional Liaison Officer to the Director. Effective March 11, 2005.

Section 213.3379 Commodity Futures Trading Commission

CTGS60477 Attorney-Advisor (General) to a Commissioner. Effective March 2, 2005.

CTGS60012 Special Assistant to a Commissioner. Effective March 11, 2005.

Section 213.3384 Department of Housing and Urban Development

DUGS60434 Staff Assistant to the Assistant Deputy Secretary for Field Policy and Management. Effective March 2, 2005.

Section 213.3394 Department of Transportation

DTGS60292 Associate Director for Governmental Affairs to the Deputy Assistant Secretary for Governmental Affairs. Effective March 17, 2005.

DTGS60372 Deputy Assistant Secretary for Governmental Affairs to the Assistant Secretary for Governmental Affairs. Effective March 18, 2005.

DTGS60373 Special Assistant to the Administrator for Intergovernmental Affairs. Effective March 28, 2005.

DTGS60374 Special Assistant to the Administrator. Effective March 29, 2005.

Authority: 5 U.S.C. 3301 and 3302; E.O. 10577, 3 CFR 1954–1958 Comp., P.218

Office of Personnel Management.

Dan G. Blair,

Acting Director.

[FR Doc. 05–8217 Filed 4–25–05; 8:45 am]

BILLING CODE 6325–39–P

SECURITIES AND EXCHANGE COMMISSION

[Investment Company Act Release No. 26835; 812–1294]

UBS Supplementary Trust, et al.; Notice of Application

April 20, 2005.

AGENCY: Securities and Exchange Commission (''Commission'').

ACTION: Notice of application for an order under section 12(d)(1)(J) of the Investment Company Act of 1940 (''Act'') for an exemption from sections 12(d)(1) (A) and (B) of the Act, under sections 6(c) and 17(b) of the Act for an exemption from section 17(a) of the Act, and under section 17(d) of the Act and rule 17d–1 under the Act to permit certain joint transactions. The order would supersede two prior orders.[1]

Applicants: UBS Supplementary Trust (''Supplementary Trust''), The UBS Funds (''UBS Trust''), UBS Relationship Funds (''Relationship Trust''), Fort Dearborn Income Securities, Inc. (''Fort Dearborn'') (UBS Trust, Relationship Trust and Fort Dearborn, the ''Investment Companies''), and UBS Global Asset Management (Americas) Inc. (''UBS Global AM'').

Summary of Application: Applicants request an order that would permit (a) certain registered management investment companies and certain entities that are excluded from the definition of investment company by section 3(c)(1), 3(c)(7) or 3(c)(11) of the Act to invest uninvested cash and cash collateral in (i) affiliated money market funds and/or short-term bond funds or (ii) one or more affiliated entities that operate as cash management investment vehicles and that are excluded from the definition of investment company by section 3(c)(1) or 3(c)(7) of the Act, and (b) the registered investment companies and the affiliated entities to continue to engage in purchase and sale transactions involving portfolio securities in reliance on rule 17a–7 under the Act.

Filing Dates: The application was filed on March 12, 2003, and amended on October 25, 2004, and April 15, 2005.

Hearing or Notification of Hearing: An order granting the application will be issued unless the Commission orders a hearing. Interested persons may request a hearing by writing to the Commission's Secretary and serving applicants with a copy of the request, personally or by mail. Hearing requests should be received by the Commission by 5:30 p.m. on May 16, 2005, and should be accompanied by proof of service on the applicants, in the form of an affidavit, or, for lawyers, a certificate of service. Hearing requests should state the nature of the writer's interest, the reason for the request, and the issues contested. Persons who wish to be notified of a hearing may request notification by writing to the Commission's Secretary.

ADDRESSES: Secretary, Commission, 450 Fifth Street, NW., Washington, DC 20549–0609; Applicants, c/o Mark F. Kemper, Esq., UBS Global Asset Management (Americas) Inc., One North Wacker Drive, Chicago, IL 60606.

FOR FURTHER INFORMATION CONTACT: Janis F. Kerns, Senior Counsel, at (202) 551–6872, or Nadya Roytblat, Assistant Director, at (202) 551–6821 (Division of Investment Management, Office of Investment Company Regulation).

SUPPLEMENTARY INFORMATION: The following is a summary of the application. The complete application may be obtained for a fee at the Commission's Public Reference Branch, 450 Fifth Street, NW., Washington, DC 20549–0102 (telephone (202) 551–5850).

Applicants' Representations

1. Each Investment Company is organized as a Delaware statutory trust, except Fort Dearborn, which is organized as an Illinois corporation. UBS Trust and Relationship Trust are registered under the Act as open-end management investment companies. Fort Dearborn is registered under the Act as a closed-end management investment company, and Supplementary Trust is exempt from registration pursuant to section 3(c)(7) of the Act. Some of the Investment Companies have multiple series, each with separate investment objectives and policies (the ''UBS Funds''). UBS Global AM is an investment adviser registered under the Investment Advisers Act of 1940 and serves as investment adviser to each UBS Fund. UBS Global AM and entities controlling, controlled by, or under common control with UBS Global AM are referred to as the ''Advisor.''[2]

2. Certain Funds (''Registered Investing Funds'') and Private Funds (''Non-Registered Investing Funds'' and, together with the Registered Investing Funds, the ''Investing Funds'') have, or may be expected to have, cash that has not been invested in portfolio securities (''Uninvested Cash''). Uninvested Cash may result from a variety of sources, including dividends or interest received on portfolio securities, unsettled securities transactions, strategic reserves, matured investments, proceeds from liquidation of investment securities, dividend payments, or money from investors. The Investing Funds also may participate in a securities lending program (''Securities

[1] Brinson Supplementary Trust, *et al.*, Investment Company Act Rel. No. 23162 (Apr. 29, 1998) (notice) and Investment Company Act Rel. No. 23208 (May 27, 1998) (order) (''Prior Order''); and The Brinson Funds, *et al.*, Investment Company Act Rel. No. 21741 (Feb. 12, 1996) (notice) and Investment Company Act Rel. No. 21814 (Mar. 11, 1996) (order) (''Prior Cash Sweep Order''). Certain affiliated persons of UBS Global AM have received separate cash sweep relief. *See* UBS PaineWebber Inc. *et al.*, Investment Company Act Rel. No. 25049 (June 26, 2001) (notice) and Investment Company Act Rel. No. 25075 (July 24, 2001) (order); PaineWebber America Fund *et al.*, Investment Company Act Rel. No. 23284 (June 24, 1998) (notice) and Investment Company Act Rel. No. 23322 (July 21, 1998) (order); and PaineWebber America Fund *et al.*, Investment Company Act Rel. No. 22541 (Mar. 4, 1997) (notice) and Investment Company Act Rel. No. 22594 (Apr. 1, 1997) (order) (''PaineWebber Orders''). Applicants will not rely on the PaineWebber Orders, and the named applicants of and any other entities relying on the PaineWebber Orders will not rely on the relief requested by this application.

[2] Applicants request that any relief granted also apply to (a) any entity excluded from the definition of ''investment company'' under section 3(c)(1), section 3(c)(7) or section 3(c)(11) of the Act for which the Advisor serves as investment adviser or trustee exercising investment discretion (together with the Supplementary Trust, the ''Private Funds''), (b) all future series of the Investment Companies (included in the term ''UBS Funds''), and (c) all other management investment companies and their series registered under the Act for which the Advisor now, or in the future, acts as investment adviser (each, a ''Fund,'' and together with the UBS Funds, the ''Funds''). All entities that currently intend to rely on the requested order are named as applicants. Any other existing or future entity that relies on the order in the future will do so only in accordance with the terms and conditions of the application.

Lending Program'') under which an Investing Fund may lend its portfolio securities to registered broker-dealers or other institutional investors. The loans are secured by collateral, including cash collateral (''Cash Collateral'' and together, with Uninvested Cash, ''Cash Balances''), equal at all times to at least the market value of the securities loaned.

3. Applicants request an order to permit: (i) The Investing Funds to use their Cash Balances to purchase shares of one or more of the Central Funds (as defined below); (ii) the Central Funds to sell their shares to and purchase (redeem) such shares from the Investing Funds; (iii) the Investing Funds and Central Funds to continue to engage in certain interfund purchase and sale transactions in securities (''Interfund Transactions''); and (iv) the Advisor to effect the above transactions.

4. ''Registered Central Funds'' are or will be open-end Funds that are advised by the Advisor, in the same group of investment companies (as defined in section 12(d)(1)(G) of the Act) as the Investing Fund and either money market funds that comply with rule 2a–7 under the Act (''Registered Money Market Funds'') or short-term bond Funds that invest in fixed income securities and maintain a dollar-weighted average portfolio maturity of three years or less. ''Non-Registered Central Funds'' are or will be Private Funds that are excluded from the definition of investment company under section 3(c)(1) or 3(c)(7) of the Act and either operate as a money market fund in compliance with rule 2a–7 under the Act (''Private Money Market Funds'') or as a short-term bond fund that invests in fixed income securities and maintains a dollar-weighted average portfolio maturity of three years or less. The Registered Central Funds and Non-Registered Central Funds are referred to collectively as the ''Central Funds.'' The investment by each Registered Investing Fund in shares of the Central Funds will be in accordance with that Registered Investing Fund's investment policies and restrictions as set forth in its registration statement. Applicants believe that the proposed transactions may reduce transaction costs, create more liquidity, increase returns, and further diversify holdings.[3]

[3] A Non-Registered Central Fund that does not comply with rule 2a–7 may accept investments of Cash Collateral from Investing Funds, but will not accept investments from Investing Funds of Uninvested Cash.

Applicants' Legal Analysis

I. Investment of Cash Balances by the Investing Funds in the Central Funds

A. Section 12(d)(1)

1. Section 12(d)(1)(A) of the Act provides that no registered investment company, or any company or companies controlled by such investment company, may acquire securities of any other investment company, and that no investment company, or any company or companies controlled by such investment company, may acquire securities of any registered investment company, if such securities represent in the aggregate more than 3% of the acquired company's outstanding voting stock, more than 5% of the acquiring company's total assets, or if such securities, together with the securities of other acquired investment companies, represent more than 10% of the acquiring company's assets. Section 12(d)(1)(B) of the Act provides that no registered open-end investment company may sell its securities to another investment company if the sale will cause the acquiring company to own more than 3% of the acquired company's voting stock, or if the sale will cause more than 10% of the acquired company's voting stock to be owned by investment companies. Any entity that is excluded from the definition of investment company under section 3(c)(1) or 3(c)(7) of the Act is deemed to be an investment company for the purposes of the 3% limitation specified in sections 12(d)(1)(A) and (B) with respect to purchases by and sales to such company.

2. Section 12(d)(1)(J) of the Act provides that the Commission may exempt any person, security, or transaction from any provision of section 12(d)(1) if and to the extent that such exemption is consistent with the public interest and the protection of investors. Applicants request relief under section 12(d)(1)(J) to permit the Investing Funds to use their Cash Balances to acquire shares of the Registered Central Funds in excess of the percentage limitations in section 12(d)(1)(A), provided however, that in all cases a Registered Investing Fund's aggregate investment of Uninvested Cash in shares of the Central Funds will not exceed 25% of the Registered Investing Fund's total assets at any time. Applicants also request relief to permit the Registered Central Funds to sell their securities to the Investing Funds in excess of the percentage limitations in section 12(d)(1)(B).

3. Applicants state that the proposed arrangement will not result in the abuses that sections 12(d)(1)(A) and (B) were intended to prevent. Applicants state that there is no threat of redemption to gain undue influence over the Registered Central Funds due to the highly liquid nature of each Registered Central Fund's portfolio. Applicants state that the proposed arrangement will not result in inappropriate layering of fees. Shares of the Central Funds sold to the Investing Funds will not be subject to a sales load, redemption fee, asset-based sales charge or service fee (as defined in rule 2830(b)(9) of the National Association of Securities Dealers Inc. Conduct Rules (''NASD Conduct Rules''), or if the shares are subject to any such fee, the Advisor for the Investing Fund will waive its advisory fee for each Investing Fund in an amount that offsets the amount of those fees incurred by the Investing Fund. If a Central Fund offers more than one class of shares in which a Registered Investing Fund may invest, the Registered Investing Fund will invest its Cash Balances only in the class with the lowest expense ratio at the time of investment. In addition, before approving any advisory contract under section 15 of the Act, the board of trustees (''Board'') of the Registered Investing Fund, including a majority who are not ''interested persons'' as defined in section 2(a)(19) of the Act (''Independent Trustees''), will consider to what extent, if any, the advisory fees charged to the Registered Investing Fund by the Advisor should be reduced to account for reduced services provided to the Registered Investing Fund as a result of the investment of Uninvested Cash in the Central Fund. Applicants represent that no Central Fund will acquire securities of any other investment company or company relying on sections 3(c)(1) or 3(c)(7) of the Act in excess of the limits contained in section 12(d)(1)(A) of the Act.

B. Section 17(a) of the Act

1. Section 17(a) of the Act makes it unlawful for any affiliated person of a registered investment company (or an affiliated person of the affiliated person), acting as principal, to sell any security to or purchase any security from the investment company. Section 2(a)(3) of the Act defines an affiliated person of another person to include any person directly or indirectly owning, controlling, or holding with power to vote 5% or more of the outstanding voting securities of the other person, any person 5% or more of whose outstanding securities are directly or indirectly owned, controlled, or held with power to vote by the other person, any person directly or indirectly

controlling, controlled by, or under common control with the other person, and any investment adviser to the investment company. Because the Investing Funds and the Central Funds share a common investment adviser or trustee exercising investment discretion, they may be deemed to be under common control and thus affiliated persons of each other. In addition, if an Investing Fund purchases more than 5% of the voting securities of a Central Fund, the Central Fund and the Investing Fund may be affiliated persons of each other. As a result, section 17(a) would prohibit the sale of the shares of Central Funds to the Investing Funds, and the redemption of the shares by the Investing Funds.

2. Section 17(b) of the Act authorizes the Commission to exempt a transaction from section 17(a) of the Act if the terms of the proposed transaction, including the consideration to be paid or received, are reasonable and fair and do not involve overreaching on the part of any person concerned, and the proposed transaction is consistent with the policy of each registered investment company concerned and with the general purposes of the Act. Section 6(c) of the Act permits the Commission to exempt persons or transactions from any provision of the Act, if the exemption is necessary or appropriate in the public interest and consistent with the protection of investors and the purposes fairly intended by the policy and provisions of the Act.

3. Applicants submit that their request for relief to permit the purchase and redemption of shares of the Central Funds by the Investing Funds satisfies the standards in sections 6(c) and 17(b) of the Act. Applicants note that shares of the Central Funds will be purchased and redeemed at their net asset value, the same consideration paid and received for these shares by any other shareholder. Applicants state that the Registered Investing Funds will retain their ability to invest Cash Balances directly in money market instruments and other short-term obligations as authorized by their respective investment objectives and policies. Applicants state that a Registered Central Fund has the right to discontinue selling shares to any of the Investing Funds if the Registered Central Fund's Board or the Advisor determines that such sales would adversely affect the Registered Central Fund's portfolio management and operations.

C. Section 17(d) of the Act and Rule 17d–1 Under the Act

1. Section 17(d) of the Act and rule 17d–1 under the Act prohibit an affiliated person of a registered investment company, acting as principal, from participating in or effecting any transaction in connection with any joint enterprise or joint arrangement in which the investment company participates, unless the Commission has approved the joint arrangement. Applicants state that the Investing Funds and the Central Funds, by participating in the proposed transactions, and the Advisor, by managing the proposed transactions, could be deemed to be participating in a joint arrangement within the meaning of section 17(d) and rule 17d–1.

2. In considering whether to approve a joint transaction under rule 17d–1, the Commission considers whether the investment company's participation in the joint transaction is consistent with the provisions, policies and purposes of the Act, and the extent to which the participation is on a basis different from or less advantageous than that of other participants. Applicants state that the investment by the Investing Funds in shares of the Central Funds would be on the same basis and no different from or less advantageous than that of other participants. Applicants submit that the proposed transactions meet the standards for an order under rule 17d–1.

II. Interfund Transactions

1. Applicants state that certain Funds currently rely on rule 17a–7 under the Act to conduct Interfund Transactions. Rule 17a–7 under the Act provides an exemption from section 17(a) for a purchase or sale of certain securities between a registered investment company and an affiliated person of such company (or an affiliated person of an affiliated person), provided that certain conditions are met, including that the affiliation between the registered investment company and the affiliated person (or an affiliated person of the affiliated person) must exist solely by reason of having a common investment adviser, common officers and/or common directors or trustees. Applicants state that the Investing Funds and Central Funds may not be able to rely on rule 17a–7 when engaging in portfolio securities transactions with each other, because some of the Investing Funds may own 5% or more of the outstanding voting securities of a Central Fund and, therefore, an affiliation would not exist solely by reason of the transacting Funds having a common investment adviser, common officers and/or common directors or trustees.

2. Applicants request relief under sections 6(c) and 17(b) of the Act to permit the Interfund Transactions. The Interfund Transactions for which relief is requested are transactions between Registered Investing Funds and Non-Registered Central Funds and between Non-Registered Investing Funds and Registered Central Funds. Applicants state that the Funds will comply with rule 17a–7 under the Act in all respects, other than the requirement that the participants be affiliated solely by reason of having a common investment adviser, common directors and/or common officers. Applicants state that the additional affiliations created under sections 2(a)(3)(A) and (B) do not affect the other protections provided by rule 17a–7, including the integrity of the pricing mechanism employed and oversight by each Fund's Board. Applicants submit that the requested relief satisfies the standards for relief in sections 6(c) and 17(b).

Applicants' Conditions

Applicants agree that the order granting the requested relief shall be subject to the following conditions:

1. Shares of the Central Funds sold to and redeemed by the Investing Funds will not be subject to a sales load, redemption fee, asset-based sales charge, or service fee (as defined in rule 2830(b)(9) of the NASD Conduct Rules), or if those shares are subject to any such fee, the Advisor will waive its advisory fee for each Investing Fund in an amount that offsets the amount of those fees incurred by the Investing Fund.

2. Before the next meeting of the Board of a Registered Investing Fund that invests in a Central Fund is held for the purpose of voting on an advisory contract under section 15 of the Act, the Advisor will provide the Board with such information as the Board may request to evaluate the effect of the investment of Uninvested Cash in the Central Funds upon the direct and indirect compensation to the Advisor. Such information will include specific information regarding the approximate cost to the Advisor of, or portion of the advisory fee under the existing advisory contract attributable to, managing the Uninvested Cash of the Registered Investing Fund that can be expected to be invested in the Central Funds. In connection with approving any advisory contract for a Registered Investing Fund, the Registered Investing Fund's Board, including a majority of the Independent Trustees, shall consider to what extent, if any, the advisory fees charged to the

Registered Investing Fund by the Advisor should be reduced to account for reduced services provided to the Registered Investing Fund by the Advisor as a result of the Uninvested Cash being invested in the Central Funds. The minute books of the Registered Investing Fund will record fully the Board's consideration in approving the advisory contract, including the considerations relating to fees referred to above.

3. Each Registered Investing Fund will invest Uninvested Cash in, and hold shares of, the Central Funds only to the extent that the Registered Investing Fund's aggregate investment of Uninvested Cash in the Central Funds does not exceed 25% of the Registered Investing Fund's total assets.

4. Investment by a Registered Investing Fund in shares of the Central Funds will be in accordance with the Registered Investing Fund's investment restrictions and will be consistent with the Registered Investing Fund's investment policies as set forth in its prospectus and statement of additional information. A Registered Investing Fund that complies with rule 2a–7 under the Act will not invest its Cash Balances in a Central Fund that does not comply with rule 2a–7. A Registered Investing Fund's Cash Balances will be invested in a particular Central Fund only if that Central Fund has been approved for investment by the Registered Investing Fund and if that Central Fund invests in the types of instruments that the Registered Investing Fund has authorized for the investment of its Cash Balances.

5. Each Fund and Private Fund that may rely on the order will be advised by the Advisor. Each Registered Investing Fund and Registered Money Market Fund that may rely on the order will be part of the same group of investment companies (as defined in section 12(d)(1)(G) of the Act).

6. No Central Fund will acquire securities of any other investment company or company relying on section 3(c)(1) or 3(c)(7) of the Act in excess of the limits contained in section 12(d)(1)(A) of the Act.

7. The Non-Registered Central Funds will comply with the requirements of sections 17(a), (d), and (e), and 18 of the Act as if the Non-Registered Central Funds were registered open-end investment companies. With respect to all redemption requests made by an Investing Fund, the Non-Registered Central Funds will comply with section 22(e) of the Act. The Advisor will adopt procedures designed to ensure that each Non-Registered Central Fund complies with sections 17(a), (d), and (e), 18 and 22(e) of the Act. The Advisor will also periodically review and update, as appropriate, the procedures and will maintain books and records describing such procedures, and maintain the records required by rules 31a–1(b)(1), 31a–1(b)(2)(ii), and 31a–1(b)(9) under the Act. All books and records required to be made pursuant to this condition will be maintained and preserved for a period of not less than six years from the end of the fiscal year in which any transaction occurred, the first two years in an easily accessible place, and will be subject to examination by the Commission and its staff.

8. Each Private Money Market Fund will comply with rule 2a–7 under the Act. With respect to each Private Money Market Fund, the Advisor will adopt and monitor the procedures described in rule 2a–7(c)(7) and will take such other actions as are required to be taken under those procedures. A Registered Investing Fund may only purchase shares of a Private Money Market Fund if the Advisor determines on an ongoing basis that the Private Money Market Fund is in compliance with rule 2a–7. The Advisor will preserve for a period of not less than six years from the date of determination, the first two years in an easily accessible place, a record of such determination and the basis upon which the determination was made. This record will be subject to examination by the Commission and its staff.

9. Each Investing Fund will purchase and redeem shares of any Non-Registered Central Fund as of the same time and at the same price, and will receive dividends and bear its proportionate share of expenses on the same basis, as other shareholders of the Non-Registered Central Fund. A separate account will be established in the shareholder records of each Non-Registered Central Fund for the account of each Investing Fund that invests in such Non-Registered Central Fund.

10. To engage in Interfund Transactions, the Investing Funds and Central Funds will comply with rule 17a–7 under the Act in all respects other than the requirement that the parties to the transaction be affiliated persons (or affiliated persons of affiliated persons) of each other solely by reason of having a common investment adviser, or investment advisers which are affiliated persons of each other, common officers and/or common directors, solely because an Investing Fund and a Central Fund might become affiliated persons within the meaning of section 2(a)(3)(A) and (B) of the Act.

11. The net asset value per share with respect to shares of a Non-Registered Central Fund that is not a Private Money Market Fund will be determined separately for each such Non-Registered Central Fund by dividing the value of the assets belonging to that Non-Registered Central Fund, less the liabilities of that Non-Registered Central Fund, by the number of shares outstanding with respect to that Non-Registered Central Fund.

12. Before a Registered Investing Fund may participate in the Securities Lending Program, a majority of the Board (including a majority of the Independent Trustees) will approve the Registered Investing Fund's participation in the Securities Lending Program. No less frequently than annually, the Board also will evaluate, with respect to each Registered Investing Fund, any securities lending arrangement and its results and determine that any investment of Cash Collateral in the Central Funds is in the best interests of the Registered Investing Fund.

For the Commission, by the Division of Investment Management, under delegated authority.

Margaret H. McFarland,

Deputy Secretary.

[FR Doc. E5–1973 Filed 4–25–05; 8:45 am]

BILLING CODE 8010–01–P

SECURITIES AND EXCHANGE COMMISSION

[Release No. 35–27961]

Filings Under the Public Utility Holding Company Act of 1935, as Amended (''Act'')

April 20, 2005.

Notice is hereby given that the following filing(s) has/have been made with the Commission pursuant to provisions of the Act and rules promulgated under the Act. All interested persons are referred to the application(s) and/or declaration(s) for complete statements of the proposed transaction(s) summarized below. The application(s) and/or declaration(s) and any amendment(s) is/are available for public inspection through the Commission's Branch of Public Reference.

Interested persons wishing to comment or request a hearing on the application(s) and/or declaration(s) should submit their views in writing by May 16, 2005, to the Secretary, Securities and Exchange Commission, Washington, DC 20549–0609, and serve a copy on the relevant applicant(s) and/or declarant(s) at the address(es) specified below. Proof of service (by

affidavit or, in the case of an attorney at law, by certificate) should be filed with the request. Any request for hearing should identify specifically the issues of facts or law that are disputed. A person who so requests will be notified of any hearing, if ordered, and will receive a copy of any notice or order issued in the matter. After May 16, 2005, the application(s) and/or declaration(s), as filed or as amended, may be granted and/or permitted to become effective.

Georgia Power Company (70–10269)

George Power Company (''Georgia''), 241 Ralph McGill Blvd., NE., Atlanta, Georgia, 30308, a wholly owned electric utility subsidiary of The Southern Company (''Southern''), has filed an application-declaration (''Application'') under sections 6(a), 7, 9(a), 10 and 12(b) of the Act and rules 45, 52, and 54.

A. Description of the Proposed Transactions

Georgia proposes to organize one or more subsidiaries for the purpose of effecting various financing transactions involving the issuance and sale of up to an aggregate of $1,100,000,000 of preferred securities with a specified par or stated value of liquidation amount of preference per security (''Preferred Securities''), from time-to-time, through May 31, 2008. In connection with the issuance of the Preferred Securities, Georgia proposes to organize (1) one or more separate subsidiaries as a business trust under the laws of the State of Georgia or a statutory trust under the laws of the State of Delaware or other comparable trust in any jurisdiction that is considered advantageous by Georgia; or (2) any other entity or structure, foreign [1] or domestic, that is considered advantageous by Georgia (individually a ''Trust'' and collectively the ''Trusts'').[2]

Trusts sponsored by Georgia have issued and outstanding a total of $940,000,000 of preferred securities as of December 31, 2004[3] Georgia currently has authority to issue additional preferred securities in an aggregate amount of up to $150,000,000 prior to October 31, 2005 pursuant to a Commission order (''Current Order'') dated October 23, 2003 (Holding Company Act Release No. 27584).[4] Georgia proposes that the authority sought in the Application to issue up to an aggregate of $1,100,000,000 of preferred securities supersede and replace the remaining authorization contained in the Current Order.

Georgia states that it will acquire all of the common stock of any Trust for an amount not less than the minimum required by any applicable law and not exceeding 21% of the total equity capitalization from time to time of the Trust (*i.e.*, the aggregate of the equity accounts of such Trust.[5] The aggregate of such investment by Georgia hereafter is referred to as the ''Equity Contribution.'' Georgia may issue and sell to any Trust, at any time or from time to time in one or more series, subordinated debentures, promissory notes or other debt instruments (individually a ''Note'' and collectively the ''Notes'') governed by an indenture or other document. The Trust will apply both the Equity Contribution made to it and the proceeds from the sale of Preferred Securities by it, from time to time, to purchase Notes. Alternatively, Georgia may enter into a loan agreement or agreements with any Trust under which the Trust will lend Georgia (Individually a ''Loan'' and collectively the ''Loans'') both the Equity Contribution to the Trust and the proceeds from the sale of the Preferred Securities by the Trust, from time to time, and Georgia will issue Notes, evidencing such borrowings, to the Trust. As of December 31, 2004, Georgia had outstanding $969,073,000 of Notes payable to trusts.

Georgia also proposes to guarantee (individually a ''Guaranty'' and collectively the ''Guaranties'') (1) payment of dividends or distributions on the Preferred Securities of any Trust if, and to the extent, the Trust has funds legally available; (2) payments to the Preferred Securities holders of amounts due upon liquidation of the Trust or redemption of the Preferred Securities of the Trust; and (3) certain additional amounts that may be payable by the Preferred Securities. Georgia's credit would support any Guaranty.

Georgia states that each Note will have a term of up to fifty years. Prior to maturity, Georgia will pay interest only on the Notes at a rate equal to the dividend or distribution rate on the related series of Preferred Securities, which dividend or distribution rate may be either fixed or adjustable, to be determined on a periodic basis by auction or remarketing procedures, in accordance with a formula or formulae based upon certain reference rates, or by other predetermined methods.[6]

[1] Georgia requests the Commission reserve jurisdiction over the use of a foreign entity as a Trust.

[2] Georgia states that the ability to use trusts in financing transactions can sometimes offer increased state and/or Federal tax efficiency. Increased tax efficiency can result if a trust is located in a state or country that has tax laws that make the proposed financing transaction more tax efficient relative to the company's existing taxing jurisdiction. However, decreasing tax exposure is usually not the primary goal when establishing a trust. Because of the potential significant non-tax benefits of these transactions, use of a trust can benefit an issuer even without a net improvement in its tax position. Trusts can increase a company's ability to access new sources of capital by enabling it to undertake financing transactions with features and terms attractive to a wider investor base. Trusts can be established in jurisdictions and/or in forms that have terms favorable to its sponsor and that, at the same time, provide targeted investors attractive incentives to invest and so provide financing. Many of these investors would not be participants in the sponsor's bank group and they typically would not hold sponsor bonds or commercial paper. Thus they represent potential new sources of capital.

[3] Georgia notes that it reclassified $940,000,000 of outstanding mandatorily redeemable Preferred Securities as liabilities, effective July 1, 2003, pursuant to Financial Accounting Standards Board (''FASB'') Statement No. 150 ''Accounting for Certain Financial Instruments with the Characteristics of both Liabilities and Equity.'' Georgia states that the reclassification as a result of implementation of Statement No. 150 did not have a material effect on its Statements of Income and Cash Flows.

[4] The Current Order authorized Georgia to issue up to $650,000,000 aggregate amount of preferred securities. Under that order, Georgia has issued $500,000,000 aggregate amount of preferred securities.

[5] The constituent instruments of each Trust, including its Trust Agreement, will provide, among other things, that the Trust's activities will be limited to the issuance and sale of Preferred Securities, from time to time, and the lending to Georgia of the (1) resulting proceeds and (2) Equity Contribution to the Trust, and certain other related activities. Accordingly, Georgia proposes that no Trust's constituent instruments include any interest or dividend coverage or capitalization ratio restrictions on its ability to issue and sell Preferred Securities, as each issuance will be supported by a Note and Guaranty, and such restrictions would not be relevant or necessary for any Trust to maintain an appropriate capital structure. Each Trust's constituent instruments will further state that its common stock is not transferable (except to certain permitted successors), that its business and affairs will be managed and controlled by Georgia (or permitted successor), and that Georgia (or permitted successor) will pay all expenses of the Trust.

[6] It is expected that Georgia's interest payment on the notes will be deductible for Federal income tax purposes and that each Trust will be treated as a passive grantor trust for Federal income tax purposes. Consequently, holders of the Preferred Securities and Georgia will be deemed to have received distributions in respect of their ownership interests in the respective Trust and will not be entitled to any ''dividends received deduction'' under the Internal Revenue Code of 1986, as amended. The Preferred Securities of any series, however, may be redeemable at the option of the Trust issuing the series (with the consent or at the direction of Georgia) at a price equal to their par or stated value or liquidation amount or preference, plus any accrued and unpaid dividends or distributions, (1) at any time after a specified date into later than approximately ten years from their date of issuance, or (2) upon the occurrence of certain events, among them that (a) the Trust is required to withhold or deduct certain amounts in connection with dividend, distribution or other payments or is subject to federal income tax with respect to interest received on the Notes issued to the Trust, or (b) it is determined that the interest payments by Georgia on the related Notes are not deductible for income tax purposes, or (c) the Trust becomes subject to regulation as an ''investment company'' under the Investment Company Act of 1940, as amended. The Preferred Securities of any series may also be subject to mandatory redemption

The interest payments will constitute each respective Trust's only income and will be used by it to pay dividends or distributions on its Preferred Securities and dividends or distributions on its common stock. Dividend payments or distributions on the Preferred Securities will be made on monthly or other periodic basis and must be made to the extent that the Trust issuing the Preferred Securities has legally available funds and cash sufficient for such purposes. However, Georgia may have the right to defer payment of interest on any issue of Notes for five or more years. Each Trust will have the parallel right to defer dividend payments or distributions on the related series of Preferred Securities for five or more years, provided that, if dividends or distributions on the Preferred Securities of any series are not paid for up to eighteen or more consecutive months, then the holders of the Preferred Securities of such series may have the right to appoint a trustee, special general partner or other special representative to enforce the Trust's right under the related Note and Guaranty. The dividend or distribution rates, payment dates, redemption and other similar provisions of each series of Preferred Securities will be substantially identical to the interest rates, payment dates, redemption and other provisions of the Notes issued by Georgia.

Georgia states that the Notes and related Guaranties will be subordinate to all other existing and future unsubordinated indebtedness for borrowed money of Georgia and will have no cross-default provisions with respect to other indebtedness of Georgia (*i.e.*, a default under any other outstanding indebtedness of Georgia would not result in a default under any Note or Guaranty). However, Georgia may be prohibited from declaring and paying dividends on its outstanding capital stock and making payments in respect of *pari passu* debt unless all payments then due under the Notes and Guaranties (without giving effect to the deferral rights discussed above) have been made.

If any Trust is required to without or deduct certain amounts in connection with dividend, distribution or other payments, the Trust may also have the obligation to ''gross up'' the payments so that the holders of the Preferred Securities issued by the Trust will receive the same payment after the withholding or deduction as they would have received if no withholding or deduction were required. In that event, Georgia's obligations under its related Note and Guaranty may also cover the ''gross up obligation.'' In addition, if any Trust is required to pay taxes with respect to income derived from interest payments on the Notes issued to it, Georgia may be required to pay the additional interest on the related Notes as shall be necessary in order that net amounts received and retained by the Trust, after payment of the taxes, shall result in the Trust's having funds as it would have had in the absence of the payment of taxes.

For financial reporting purposes, each Trust will be a variable interest entity. On March 31, 2004, Georgia prospectively adopted FASB Interpretation No. 46R, ''Consolidation of Variable Interest Entities'' which requires the primary beneficiary of a variable interest entity to consolidate the related assets and liabilities (''FIN 46R''). The adoption of FIN 46R had no impact on Georgia's net income. Georgia accounts for its investment in each Trust under the equity method in accordance with FIN 46R, since Georgia does not meet the FIN 46R definition of a primary beneficiary.[7]

The Notes that will be payable by Georgia to the Trusts will be presented as a separate line item on Georgia's balance sheet. Interest payable on the Notes will be reflected as a separate line item on Georgia's income statement and appropriate disclosures concerning the Preferred Securities, Guaranties and Notes will be included in the notes to Georgia's financial statements.

B. General Financing Parameters and Use of Proceeds

1. Effective Cost of Capital

Georgia states that the effective cost of capital on the Preferred Securities and the interest rate on the Notes will not exceed competitive market rates available at the time of the issuance of the securities having the same or reasonably similar terms and conditions issued by companies of reasonably comparable credit quality, provided that, in no event will be effective cost of capital exceed 300 basis points over U.S. Treasury securities having comparable maturities.

2. Issuance Expenses

Georgia states that the underwriting fees, commissions or other similar renumeration paid in connection with the non-competitive issue, sale or distribution of a security that is the subject of the Application (not including any original issue discount) will not exceed 5% of the principal or total amount of the security being issued.

3. Common Equity Ratio

Georgia represents that it will maintain its common equity as a percentage of capitalization (inclusive of short-term debt) at no less than thirty percent.[8] Georgia requests the Commission to reserve jurisdiction over any guarantees or securities that do not satisfy these conditions.

4. Investment Grade Criteria

Georgia further represents that no guaranties or other securities may be issued in reliance upon any authorization that may be granted by the Commission pursuant to the Application, unless upon original issuance (1) the security to be issued, if rates, is rated investment grade; (2) all outstanding securities of Georgia that are rated are rated investment grade; and (3) all outstanding securities of Southern that are rated are rate investment grade. For purposes of this provision, a security will be deemed to be rated ''investment grade'' if it is rated investment grade by at least one nationally recognized statistical rating organization, as that term is used in paragraphs (c)(2)(vi)(E), (F) and (H) of rule 15c3–1 under the Securities Exchange Act of 1934, as amended. Georgia requests that is be permitted to issue a security that does not satisfy the foregoing conditions if the requirements of rule 52(a)(i) and rule 52(a)(iii) are met and the issue and sale of the security have been expressly authorized by the Georgia Public Service Commission. Georgia also requests the Commission to reserve jurisdiction over any guaranties or securities that do not satisfy these conditions.

5. Use of Proceeds

Georgia will use the proceeds from the sale of the securities in connection

upon the occurrence of certain events that are typical of a transaction of this type. Georgia also may have the right in certain cases, or in its discretion, to exchange the Preferred Securities of any Trust for the Notes or other junior subordinated debt issued to the Trust. In addition, rather than issuing Preferred Securities of a Trust, Georgia may instead issue Notes or other junior subordinated debt directly to purchasers.

[7] The primary beneficiary under FIN 46R is the enterprise ''that will absorb a majority of the entity's expected losses, receive a majority of the entity's expected residual returns, or both.'' If one of the parties will absorb a majority of the entity's expected losses and another party receives a majority of the expected residual returns, ''the enterprise absorbing a majority of the losses shall consolidate the variable interest entity.'' In the case of Georgia's Preferred Securities, the security holders have the risk of absorbing the majority of the losses through the default by Georgia or the Trusts, and therefore are the primary beneficiaries.

[8] In regard to a Trust maintaining a minimum amount of common equity, see the discussion in footnote 5, *supra*.

with its ongoing construction program, to pay scheduled maturities and/or refundings of its securities, to repay short-term indebtedness to the extent outstanding and for other general corporate purposes.

For the Commission, by the Division of Investment Management, pursuant to delegated authority.

Margaret H. McFarland,

Deputy Secretary.

[FR Doc. 05–8248 Filed 4–25–05; 8:45 am]

BILLING CODE 8010–01–M

SECURITIES AND EXCHANGE COMMISSION

[Release No. 34–51579; File No. SR–FICC–2005–08]

Self-Regulatory Organizations; Fixed Income Clearing Corporation; Notice of Filing and Immediate Effectiveness of Proposed Rule Change To Expand the Types of Securities Eligible for FICC's GCF Repo Service to Include Treasury-Inflation Protected Securities

April 20, 2005.

Pursuant to Section 19(b)(1) of the Securities Exchange Act of 1934 (''Act''),[1] notice is hereby given that on April 8, 2005, The Fixed Income Clearing Corporation (''FICC'') filed with the Securities and Exchange Commission (''Commission'') the proposed rule change described in Items I, II, and III below, which items have been prepared primarily by FICC. The Commission is publishing this notice to solicit comments on the proposed rule change from interested parties.

I. Self-Regulatory Organization's Statement of the Terms of Substance of the Proposed Rule Change

FICC is seeking to amend the rules of its Government Securities Division (''GSD'') to expand the types of securities eligible for the GCF Repo service to include Treasury Inflation-Protected Securities (''TIPS''), a Treasury security whose principal amount is adjusted for inflation.

II. Self-Regulatory Organization's Statement of the Purpose of, and Statutory Basis for, the Proposed Rule Change

In its filing with the Commission, FICC included statements concerning the purpose of and basis for the proposed rule change and discussed any comments it received on the proposed rule change. The text of these statements may be examined at the places specified in Item IV below. FICC has prepared summaries, set forth in Sections (A), (B), and (C) below, of the most significant aspects of these statements.[2]

(A) Self-Regulatory Organization's Statement of the Purpose of, and Statutory Basis for, the Proposed Rule Change

The GCF Repo service is a significant alternative financing vehicle to the delivery versus payment and tri-party repo markets. Currently, most Treasury securities, non-mortgage-backed agency securities, and fixed and adjustable rate mortgage-backed securities are eligible for this service.[3] FICC is expanding its rules to also make eligible TIPS.

When the GCF Repo service was implemented, TIPS were not generally accepted as collateral in tri-party repo arrangements and therefore were not included in the service. Since then, TIPS have gained considerable acceptance in the marketplace for tri-party and other trading practices. TIPS are currently netting eligible for the GSD's delivery versus payment service, and FICC has received requests from members to make TIPS eligible for the GCF Repo service. FICC has received an endorsement from the Funding Practices Committee of The Bond Market Association with respect to this proposal.[4]

TIPS, which are issued in terms of 5, 10, and 20 years, have the same basic characteristics of other Treasury securities and are generally considered to be of the same low risk level.[5] FICC has determined that with respect to its risk management processes, TIPS would be subject to the same maturity ranges, offset classes, margin rates, and disallowance factors as are other Treasury securities.[6]

For purposes of GSD Rule 20 (Special Provisions for GCF Repo Transactions), general references to U.S. Treasury bills, notes, or bonds do not include TIPS.[7] Therefore, TIPS could not be used within the GCF Repo service to satisfy obligations to post or return any other type of collateral.[8]

FICC believes the proposed rule change is consistent with the requirements of Section 17A of the Act[9] and the rules and regulations thereunder applicable to FICC because it allows FICC to expand an important service that provides members with a continuing ability to engage in general collateral trading activity in a safe and efficient manner. As such, the proposed rule facilitates the prompt and accurate clearance and settlement of securities transactions and assures the safeguarding of securities and funds which are in the custody or control of FICC or for which it is responsible.

(B) Self-Regulatory Organization's Statement on Burden on Competition

FICC does not believe that the proposed rule change will have an impact or impose any burden on competition.

(C) Self-Regulatory Organization's Statement on Comments on the Proposed Rule Change Received From Members, Participants, or Others

Written comments were not solicited or received. FICC will notify the Commission of any written comments received by FICC.

III. Date of Effectiveness of the Proposed Rule Change and Timing for Commission Action

The foregoing rule change has become effective upon filing pursuant to Section 19(b)(3)(A) of the Act[10] and Rule 19b–4(f)(4)[11] thereunder because the proposed rule does not significantly affect the respective rights or obligations of the clearing agency or persons using the service and does not adversely affect the safeguarding of securities or funds in the custody or control of FICC or for which it is responsible. The rule change will be implemented on the date FICC lists the Generic CUSIP number for TIPS as a ''GCF Repo Security'' on its master file of eligible securities, which date will be announced to members by

[1] 15 U.S.C. 78s(b)(1).

[2] The Commission has modified the text of the summaries prepared by FICC.

[3] Securities Exchange Act Release Nos. 40623 (October 30, 1998), 63 FR 59831 (November 5, 1998) [File No. SR–GSCC–98–02] and 42996 (June 30, 2000), 65 FR 42740 [File No. SR–GSCC–00–04].

[4] FICC has obtained the Generic CUSIP Number necessary for the inclusion of TIPS as a ''GCF Repo Security'' on its master file of eligible securities. Upon effectiveness of this proposal, FICC will effectuate the proposed change by listing this Generic CUSIP Number on the master file. The date of such listing will be announced to members by Important Notice.

[5] TIPS are issued through the auction process, are direct obligations of the U.S. government, and are backed by its full faith and credit.

[6] As such, references to ''GCF Treasury Securities'' or ''GCF Treasuries'' in the Margin Factor and Offset Class Schedules and Disallowance Percentage Schedules that are annexed to the GSD Rules will include TIPS upon effectiveness of this filing.

[7] The proposed rule change also amends GSD's Rule 20 to make clear that reference to ''U.S. Treasury bills, notes or bonds'' therein shall not include Treasury Inflation-Protected Securities.

[8] However, as is consistent with the existing GCF Repo provisions, U.S. Treasury bills, notes, or bonds (or cash) may generally be used to satisfy obligations to post or return other collateral types and therefore could be used to satisfy any such obligations involving TIPS.

[9] 15 U.S.C. 78q–1.

[10] 15 U.S.C. 78s(b)(3)(A).

[11] 17 CFR 240.19b–4(f)(4).

Important Notice. At any time within sixty days of the filing of the proposed rule change, the Commission may summarily abrogate the rule change if it appears to the Commission that such action is necessary or appropriate in the public interest, for the protection of investors, or otherwise in furtherance of the purposes of the Act.

IV. Solicitation of Comments

Interested persons are invited to submit written data, views, and arguments concerning the foregoing, including whether the proposed rule change is consistent with the Act. Comments may be submitted by any of the following methods:

Electronic Comments

- Use the Commission's Internet comment form (*http://www.sec.gov/rules/sro.shtml*) or
- Send an e-mail to *rule-comments@sec.gov.* Please include File Number SR–FICC–2005–08 on the subject line.

Paper Comments

- Send paper comments in triplicate to Jonathan G. Katz, Secretary, Securities and Exchange Commission, 450 Fifth Street, NW., Washington, DC 20549–0609.

All submissions should refer to File Number SR–FICC–2005–08. This file number should be included on the subject line if e-mail is used. To help the Commission process and review your comments more efficiently, please use only one method. The Commission will post all comments on the Commission's Internet Web site (*http://www.sec.gov/rules/sro.shtml*). Copies of the submission, all subsequent amendments, all written statements with respect to the proposed rule change that are filed with the Commission, and all written communications relating to the proposed rule change between the Commission and any person, other than those that may be withheld from the public in accordance with the provisions of 5 U.S.C. 552, will be available for inspection and copying in the Commission's Public Reference Section, 450 Fifth Street, NW., Washington, DC 20549. Copies of such filings also will be available for inspection and copying at the principal office of FICC and on FICC's Web site at *http://www.ficc.com.* All comments received will be posted without change; the Commission does not edit personal identifying information from submissions. You should submit only information that you wish to make available publicly. All submissions should refer to File Number SR–FICC–2005–08 and should be submitted on or before May 17, 2005.

For the Commission by the Division of Market Regulation, pursuant to delegated authority.[12]

Margaret H. McFarland,

Deputy Secretary.

[FR Doc. E5–1974 Filed 4–25–05; 8:45 am]

BILLING CODE 8010–01–P

SECURITIES AND EXCHANGE COMMISSION

[Release No. 34–51583; File No. SR–NASD–2005–042]

Self-Regulatory Organizations; National Association of Securities Dealers, Inc.; Notice of Filing and Immediate Effectiveness of Proposed Rule Change To Establish Fees for Non-Members Using the New Nasdaq Workstation

April 20, 2005.

Pursuant to Section 19(b)(1) of the Securities Exchange Act of 1934 (''Act''),[1] and Rule 19b–4 thereunder,[2] notice is hereby given that on March 30, 2005, the National Association of Securities Dealers, Inc. (''NASD''), through its subsidiary, The Nasdaq Stock Market, Inc. (''Nasdaq''), filed with the Securities and Exchange Commission (''Commission'') the proposed rule change as described in Items I, II, and III below, which Items have been prepared by Nasdaq. Nasdaq has filed the proposal as a ''non-controversial'' rule change pursuant to Section 19(b)(3)(A) of the Act[3] and Rule 19b–4(f)(6) thereunder,[4] which renders the proposed rule change effective immediately upon filing. The Commission is publishing this notice to solicit comments on the proposed rule change from interested persons.

I. Self-Regulatory Organization's Statement of the Terms of the Substance of the Proposed Rule Change

Nasdaq proposes to establish fees for non-members using the new Nasdaq Workstation. Nasdaq will begin making the Nasdaq Workstation available to users on or about May 2, 2005.

The text of the proposed rule change is available on the NASD's Web site (*http://www.nasd.com*), at the NASD's Office of the Secretary, and at the Commission's Public Reference Room.

II. Self-Regulatory Organization's Statement of the Purpose of, and Statutory Basis for, the Proposed Rule Change

In its filing with the Commission, Nasdaq included statements concerning the purpose of and basis for the proposed rule change and discussed any comments it received on the proposed rule change. The text of these statements may be examined at the places specified in Item IV below. Nasdaq has prepared summaries, set forth in Sections A, B, and C below, of the most significant aspects of such statements.

A. Self-Regulatory Organization's Statement of the Purpose of, and Statutory Basis for, the Proposed Rule Change

1. Purpose

As announced in recent Nasdaq Head Trader alerts,[5] Nasdaq is replacing its current front-end workstation, the Nasdaq Workstation II® (the ''NWII''), with a new front-end offering. The new Nasdaq Workstation℠ will be available through a dedicated high-bandwidth circuit or an internet broadband connection, but in contrast to the NWII, the new Nasdaq Workstation will not require use of a service delivery platform (''SDP''), a hardware unit located at the subscriber's premises. Nasdaq believes the elimination of SDPs would result in substantial cost savings to users of the new Nasdaq Workstation in comparison with the NWII. The main version of the Nasdaq Workstation will be referred to as ''Nasdaq Workstation Trader,'' and can be used by members for order and quotation entry, trade reporting, and outbound order routing.[6]

In SR–NASD–2005–041,[7] which is being filed on an immediately effective basis, Nasdaq has proposed applying the fee schedule described below to members using the new Workstation. In this filing, Nasdaq is proposing applying the same fee schedule to non-members that subscribe to this service. The non-members that currently subscribe to the NWII are service bureaus that use the NWII to monitor information supplied over NWII terminals for purposes of comparison with data supplied through their own services. Non-members are not permitted to use the NWII, and will

---

[12] 17 CFR 200.30–3(a)(12).

[1] 15 U.S.C. 78s(b)(1).

[2] 17 CFR 240.19b–4.

[3] 15 U.S.C. 78s(b)(3)(A).

[4] 17 CFR 240.19b–4(f)(6).

[5] *See* Nasdaq Head Trader Alert 2005–019 (March 1, 2005) and Nasdaq Head Trader Alert 2005–009 (January 25, 2005) (*http://www.nasdaqtrader.com/dynamic/ newsindex/headtraderalerts_2005.stm*) and Nasdaq Head Trader Alert 2004–105 (July 30, 2004).

[6] Nasdaq's current Weblink ACT product, which is used for trade reporting, is being renamed ''Nasdaq Workstation Post Trade.''

[7] Securities Exchange Act Release No. 51581 (April 20, 2005).

not be permitted to use the new Nasdaq Workstation, for purposes of entering quotes or orders.[8]

The new Nasdaq Workstation will include all of the same functionality as the NWII, however, with the exception of a little-used market statistic query function. Accordingly, member firms may continue to use the Workstation either as their primary trading medium or as a supplemental backup system. Nasdaq expects to discontinue support of the NWII by the end of October 2005. Firms that currently use the NWII will need to transition to the new Workstation or another front-end solution by that time. Nasdaq will contact all NWII customers to assist them in their transition. Customers will be provided with materials and training support for the transition.

The fee for the new Nasdaq Workstation will be $435 per user per month, plus charges for any market data services received through the Workstation. The fee for the NWII is $525 per logon [9] per month for the first 150 logons, but the NWII includes an entitlement to Total View data and UQDF/UTDF data, which otherwise cost $70 per user per month and $20 per user per month respectively. Thus, the fee for the new Workstation plus Total View data and UQDF/UTDF data is identical to the fee for Nasdaq's current NWII offering.

To ease the transition from NWII to the new Workstation, Nasdaq will allow current NWII users to use any form of the new Nasdaq Workstation without charge for a 60-day period commencing on the firm's scheduled first date of use of the new service, provided that users continue to pay charges for existing NWII service during that period.

2. Statutory Basis

Nasdaq believes that the proposed rule change is consistent with the provisions of Section 15A of the Act,[10] in general, and Section 15A(b)(5) [11] of the Act, in particular, in that it provides for the equitable allocation of reasonable dues, fees and other charges among members and issuers and other persons using any facility or system which the NASD operates or controls. Nasdaq also believes that the proposed rule change would result in non-members that receive the new Nasdaq Workstation paying the same fees for the service as will be paid by NASD members. Such fees, when added to the fees for the TotalView and UQDF/UTDF data feeds, are identical to the current fees for the NWII. Because the new Workstation will allow the elimination of SDPs supporting the NWII, however, Nasdaq believes that the proposed rule change would result in substantial cost savings for subscribers that opt to receive the new Workstation service.

B. Self-Regulatory Organization's Statement on Burden on Competition

Nasdaq does not believe that the proposed rule change will result in any burden on competition that is not necessary or appropriate in furtherance of the purposes of the Act.

C. Self-Regulatory Organization's Statement on Comments on the Proposed Rule Change Received From Members, Participants, or Others

Written comments were neither solicited nor received.

III. Date of Effectiveness of the Proposed Rule Change and Timing for Commission Action

The proposed rule change has become effective pursuant to Section 19(b)(3)(A) of the Act [12] and subparagraph (f)(6) of Rule 19b–4 thereunder,[13] because Nasdaq has designated the proposed rule change as one that: (i) Does not significantly affect the protection of investors or the public interest; (ii) does not impose any significant burden on competition; and (iii) does not become operative for 30 days from the date on which it was filed, or such shorter time as the Commission may designate if consistent with the protection of investors and the public interest. Nasdaq provided the Commission with written notice of its intent to file this proposed rule change at least five business days prior to the date of filing the proposed rule change. At any time within 60 days of the filing of such rule change, the Commission may summarily abrogate such rule change if it appears to the Commission that such action is necessary or appropriate in the public interest, for the protection of investors, or otherwise in furtherance of the purpose of the Act.

IV. Solicitation of Comments

Interested persons are invited to submit written data, views, and arguments concerning the foregoing, including whether the proposed rule change is consistent with the Act. Comments may be submitted by any of the following methods:

Electronic Comments

- Use the Commission's Internet comment form (*http://www.sec.gov/rules/sro.shtml*); or
- Send an e-mail to *rule-comments@sec.gov.* Please include File Number SR–NASD–2005–042 on the subject line.

Paper Comments

- Send paper comments in triplicate to Jonathan G. Katz, Secretary, Securities and Exchange Commission, 450 Fifth Street, NW., Washington, DC 20549–0609.

All submissions should refer to File Number SR–NASD–2005–042. This file number should be included on the subject line if e-mail is used. To help the Commission process and review your comments more efficiently, please use only one method. The Commission will post all comments on the Commission's Internet Web site (*http://www.sec.gov/rules/sro.shtml*). Copies of the submission, all subsequent amendments, all written statements with respect to the proposed rule change that are filed with the Commission, and all written communications relating to the proposed rule change between the Commission and any person, other than those that may be withheld from the public in accordance with the provisions of 5 U.S.C. 552, will be available for inspection and copying in the Commission's Public Reference Section, 450 Fifth Street, NW., Washington, DC 20549. Copies of such filing also will be available for inspection and copying at the principal office of the NASD. All comments received will be posted without change; the Commission does not edit personal identifying information from submissions. You should submit only information that you wish to make available publicly. All submissions should refer to File Number SR–NASD–2005–042 and should be submitted on or before May 17, 2005.

For the Commission, by the Division of Market Regulation, pursuant to delegated authority.[14]

Margaret H. McFarland,

Deputy Secretary.

[FR Doc. E5–1970 Filed 4–25–05; 8:45 am]

BILLING CODE 8010–01–P

[8] In limited circumstances, non-members may report trades to Nasdaq. *See* NASD Rule 6120.

[9] The term ''logon'' refers to an individual right of access, and therefore is equivalent to the term ''user'' in the new rule.

[10] 15 U.S.C. 78*o*–3.

[11] 15 U.S.C. 78*o*–3(5).

[12] 15 U.S.C. 78s(b)(3)(A).

[13] 17 CFR 240.19b–4(f)(6).

[14] 17 CFR 200.30–3(a)(13).

SECURITIES AND EXCHANGE COMMISSION

[Release No. 34–51581; File No. SR–NASD–2005–041]

Self-Regulatory Organizations; National Association of Securities Dealers, Inc.; Notice of Filing and Immediate Effectiveness of Proposed Rule Change To Establish Fees for Members Using the New Nasdaq Workstation

April 20, 2005.

Pursuant to Section 19(b)(1) of the Securities Exchange Act of 1934 (''Act''),[1] and Rule 19b–4 thereunder,[2] notice is hereby given that on March 30, 2005, the National Association of Securities Dealers, Inc. (''NASD''), through its subsidiary, The Nasdaq Stock Market, Inc. (''Nasdaq''), filed with the Securities and Exchange Commission (''Commission'') the proposed rule change as described in Items I, II, and III below, which Items have been prepared by Nasdaq. Pursuant to Section 19(b)(3)(A) of the Act[3] and Rule 19b–4(f)(1), (2), and (5) thereunder,[4] Nasdaq has designated this proposal in part as constituting a stated policy, practice, or interpretation with respect to the meaning, administration, or enforcement of an existing rule, in part as establishing or changing a due, fee, or other charge, and in part as a proposal effecting a change in an existing order-entry or trading system of a self-regulatory organization, which renders the proposed rule change effective immediately upon filing. The Commission is publishing this notice to solicit comments on the proposed rule change from interested persons.

I. Self-Regulatory Organization's Statement of the Terms of Substance of the Proposed Rule Change

Nasdaq proposes to amend NASD Rule 7010 to establish fees for the new Nasdaq Workstation and to file a Head Trader Alert regarding the Nasdaq Workstation and the new Nasdaq Information Exchange (''QIX'') protocol. Nasdaq will begin making the Nasdaq Workstation available to users on or about May 2, 2005.

The text of the proposed rule change is available on the NASD's Web site (*http://www.nasd.com*), at the NASD's Office of the Secretary, and at the Commission's Public Reference Room.

[1] 15 U.S.C. 78s(b)(1).

[2] 17 CFR 240.19b–4.

[3] 15 U.S.C. 78s(b)(3)(A).

[4] 17 CFR 240.19b–4(f)(1), (2), and (5).

II. Self-Regulatory Organization's Statement of the Purpose of, and Statutory Basis for, the Proposed Rule Change

In its filing with the Commission, Nasdaq included statements concerning the purpose of and basis for the proposed rule change and discussed any comments it received on the proposed rule change. The text of these statements may be examined at the places specified in Item IV below. Nasdaq has prepared summaries, set forth in Sections A, B, and C below, of the most significant aspects of such statements.

A. Self-Regulatory Organization's Statement of the Purpose of, and Statutory Basis for, the Proposed Rule Change

1. Purpose

The New Nasdaq Workstation

As announced in recent Nasdaq Head Trader alerts,[5] Nasdaq is replacing its current front-end workstation, the Nasdaq Workstation II® (the ''NWII''), with a new front-end offering. The new Nasdaq Workstation℠ will be available through a dedicated high-bandwidth circuit or an Internet broadband connection, but in contrast to the NWII, the new Nasdaq Workstation will not require use of a service delivery platform (''SDP''), a hardware unit located at the subscriber's premises. Nasdaq believes that the elimination of SDPs will result in substantial cost savings to users of the new Nasdaq Workstation in comparison with the NWII. The main version of the Nasdaq Workstation will be referred to as ''Nasdaq Workstation Trader,'' and can be used by members for order and quotation entry, trade reporting, and outbound order routing.[6]

The new Nasdaq Workstation will include all of the same functionality as the NWII, however, with the exception of a little-used market statistic query function. Accordingly, firms may continue to use the Workstation either as their primary trading medium or as a supplemental backup system. Nasdaq expects to discontinue support of the NWII by the end of October 2005. Firms that currently use the NWII will need to transition to the new Workstation or another front-end solution by that time. Nasdaq will contact all NWII customers to assist them in their transition. Customers will be provided with materials and training support for the transition.

The fee for the new Nasdaq Workstation will be $435 per user per month, plus charges for any market data services received through the Workstation. The fee for the NWII is $525 per logon[7] per month for the first 150 logons, but the NWII includes an entitlement to Total View data and UQDF/UTDF data, which otherwise cost $70 per user per month and $20 per user per month respectively. Thus, the fee for the new Workstation plus Total View data and UQDF/UTDF data is identical to the fee for Nasdaq's current NWII offering.

To ease the transition from NWII to the new Workstation, Nasdaq will allow current NWII users to use any form of the new Nasdaq Workstation without charge for a 60-day period commencing on the firm's scheduled first date of use of the new service, provided that users continue to pay charges for existing NWII service during that period.

QIX

In SR–NASD–2005–002[8] and Nasdaq Head Trader Alert 2005–009, Nasdaq announced that its new QIX communication protocol would support a full range of ''post-trade'' trade reporting functionality. As of the date of this filing, however, trade reporting functionality through QIX has not been placed into production for any market participants. As a result of the low level of interest expressed by market participants in using QIX for trade reporting, Nasdaq has decided not to support trade reporting through QIX. As is currently the case, trades executed through the execution services of the Nasdaq Market Center, including trades stemming from quotes/orders submitted through QIX, will be reported to the Nasdaq Market Center automatically, without a need for specialized trade reporting functionality. Trade reporting functionality will continue to be available to market participants that need it through the computer-to-computer interface (''CTCI'') protocol, the new Nasdaq Workstation, and in the second quarter of this year, though FIX.

[5] *See* Nasdaq Head Trader Alert 2005–019 (March 1, 2005) and Nasdaq Head Trader Alert 2005–009 (January 25, 2005) (*http://www.nasdaqtrader.com/dynamic/newsindex/headtraderalerts_2005.stm*) and Nasdaq Head Trader Alert 2004–105 (July 30, 2004). Nasdaq filed Head Trader Alert 2005–009 as an exhibit to Securities Exchange Act Release No. 51170 (February 9, 2005), 70 FR 7988 (February 16, 2005) (SR–NASD–2005–002) and is filing Nasdaq Head Trader Alert 2005–019 as an exhibit to this filing.

[6] Nasdaq's current Weblink ACT product, which is used for trade reporting, is being renamed ''Nasdaq Workstation Post Trade.''

[7] The term ''logon'' refers to an individual right of access, and therefore is equivalent to the term ''user'' in the new rule.

[8] Securities Exchange Act Release No. 51170 (February 9, 2005), 70 FR 7988 (February 16, 2005) (SR–NASD–2005–002).

2. Statutory Basis

Nasdaq believes that the proposed rule change is consistent with the provisions of Section 15A of the Act,[9] in general, and Section 15A(b)(5)[10] of the Act, in particular, in that it provides for the equitable allocation of reasonable dues, fees and other charges among members and issuers and other persons using any facility or system which the NASD operates or controls. Nasdaq also believes that the proposed rule change will result in subscribers being eligible to receive the new Nasdaq Workstation at a price that, when added to the price for the TotalView and UQDF/UTDF data feeds, is identical to the current price for the NWII. Because the new Workstation will allow the elimination of SDPs supporting the NWII, however, Nasdaq believes the proposed rule change would result in substantial cost savings for subscribers that opt to receive the new Workstation service.

B. Self-Regulatory Organization's Statement on Burden on Competition

Nasdaq does not believe that the proposed rule change will result in any burden on competition that is not necessary or appropriate in furtherance of the purposes of the Act.

C. Self-Regulatory Organization's Statement on Comments on the Proposed Rule Change Received From Members, Participants, or Others

Written comments were neither solicited nor received.

III. Date of Effectiveness of the Proposed Rule Change and Timing for Commission Action

The foregoing rule change has become effective pursuant to Section 19(b)(3)(A) of the Act[11] and subparagraphs (f)(1), (2), and (5) of Rule 19b–4 thereunder, because it constitutes a stated policy, practice, or interpretation with respect to the meaning, administration, or enforcement of an existing rule, establishes or changes a due, fee, or other charge, and effects a change in an existing order-entry or trading system.[12] At any time within 60 days of the filing of the proposed rule change, the Commission may summarily abrogate such rule change if it appears to the Commission that such action is necessary or appropriate in the public interest, for the protection of investors, or otherwise in furtherance of the purposes of the Act.

[9] 15 U.S.C. 78*o*–3.

[10] 15 U.S.C. 78*o*–3(5).

[11] 15 U.S.C. 78s(b)(3)(A).

[12] 17 CFR 240.19b–4(f)(1), (2), and (5).

IV. Solicitation of Comments

Interested persons are invited to submit written data, views, and arguments concerning the foregoing, including whether the proposed rule change is consistent with the Act. Comments may be submitted by any of the following methods:

Electronic Comments

- Use the Commission's Internet comment form (*http://www.sec.gov/rules/sro.shtml*); or
- Send an e-mail to *rule-comments@sec.gov.* Please include File Number SR–NASD–2005–041 on the subject line.

Paper Comments

- Send paper comments in triplicate to Jonathan G. Katz, Secretary, Securities and Exchange Commission, 450 Fifth Street, NW., Washington, DC 20549–0609.

All submissions should refer to File Number SR–NASD–2005–041. This file number should be included on the subject line if e-mail is used. To help the Commission process and review your comments more efficiently, please use only one method. The Commission will post all comments on the Commission's Internet Web site (*http://www.sec.gov/rules/sro.shtml*). Copies of the submission, all subsequent amendments, all written statements with respect to the proposed rule change that are filed with the Commission, and all written communications relating to the proposed rule change between the Commission and any person, other than those that may be withheld from the public in accordance with the provisions of 5 U.S.C. 552, will be available for inspection and copying in the Commission's Public Reference Section, 450 Fifth Street, NW., Washington, DC 20549. Copies of such filing also will be available for inspection and copying at the principal office of the NASD. All comments received will be posted without change; the Commission does not edit personal identifying information from submissions. You should submit only information that you wish to make available publicly. All submissions should refer to File Number SR–NASD–2005–041 and should be submitted on or before May 17, 2005.

For the Commission, by the Division of Market Regulation, pursuant to delegated authority.[13]

Margaret H. McFarland,

Deputy Secretary.

[FR Doc. E5–1975 Filed 4–25–05; 8:45 am]

BILLING CODE 8010–01–P

SECURITIES AND EXCHANGE COMMISSION

[Release No. 34–51573; File No. SR–NYSE–2004–71]

Self-Regulatory Organizations; Order Approving Proposed Rule Change and Amendment No. 1 Thereto by the New York Stock Exchange, Inc. To Amend NYSE Rule 104 Regarding the Requirement That Specialists Obtain Floor Official Approval for Destabilizing Dealer Account Transactions in ETFs

April 19, 2005.

On December 15, 2004, the New York Stock Exchange, Inc. (''NYSE'' or ''Exchange'') filed with the Securities and Exchange Commission (''Commission''), pursuant to section 19(b)(1) of the Securities Exchange Act of 1934 (''Act'')[1] and Rule 19b–4 thereunder,[2] a proposed rule change to amend NYSE Rule 104 regarding the requirement that specialists obtain floor official approval for destabilizing dealer account transactions in ETFs. On February 28, 2005, the NYSE submitted Amendment No. 1 to the proposed rule change.[3] The proposed rule change, as amended, was published for comment in the **Federal Register** on March 15, 2005.[4] The Commission received no comments on the proposal.

The Commission finds that the proposed rule change, as amended, is consistent with the requirements of the Act and the rules and regulations thereunder applicable to a national securities exchange.[5] In particular, the Commission believes that the proposed rule change is consistent with section 6(b)(5) of the Act,[6] which requires that the rules of an exchange be designed, among other things, to prevent fraudulent and manipulative practices, to promote just and equitable principles

[13] 17 CFR 200.30–3(a)(12).

[1] 15 U.S.C. 78s(b)(1).

[2] 17 CFR 240.19b–4.

[3] Amendment No. 1 superseded the originally filed proposed rule change in its entirety.

[4] *See* Securities Exchange Act Release No. 51329 (March 8, 2005), 70 FR 12769.

[5] In approving this proposed rule change, the Commission notes that it has considered the proposed rule's impact on efficiency, competition, and capital formation. 15 U.S.C. 78c(f).

[6] 15 U.S.C. 78f(b)(5).

of trade, to remove impediments to and perfect the mechanism of a free and open market and a national market system, and, in general, to protect investors and the public interest.

The Exchange has proposed to remove the current restriction on the ability of specialists to buy on plus ticks or sell on minus ticks without Floor Official approval, as set forth in NYSE Rules 104.10(5) and (6), for transactions in investment company units and Trust Issued Receipts (collectively referred to as ''Exchange Traded Funds,'' or ''ETFs''). The Commission believes that, because ETFs are priced derivatively, based on the value of an underlying basket of securities, the removal of this restriction is warranted, and notes that it has previously approved a similar rule change adopted by the American Stock Exchange LLC (''Amex'').[7] In approving the proposed rule change, the Commission notes that an Exchange specialist must continue to engage in dealings for his or her own account to assist in the maintenance of a fair and orderly market.[8]

It is therefore ordered, pursuant to section 19(b)(2) of the Act,[9] that the proposed rule change (File No. SR–NYSE–2004–71), as amended, be, and hereby is, approved.

For the Commission, by the Division of Market Regulation, pursuant to delegated authority.[10]

Margaret H. McFarland,

Deputy Secretary.

[FR Doc. E5–1965 Filed 4–25–05; 8:45 am]

BILLING CODE 8010–01–P

[7] *See* Securities Exchange Act Release No. 49087 (January 15, 2004), 69 FR 3622 (January 26, 2004) (order approving, among other things, the removal of the restriction on Amex specialists from buying on plus ticks and selling on minus ticks without Floor Official approval for transactions in Exchange Traded Funds).

[8] *See* NYSE Rule 104 and Rule 11b–1 under the Act, 17 CFR 240.11b–1.

[9] 15 U.S.C. 78s(b)(2).

[10] 17 CFR 200.30–3(a)(12).

SECURITIES AND EXCHANGE COMMISSION

[Release No. 34–51586; File No. SR–OCC–2005–05]

Self-Regulatory Organizations; The Options Clearing Corporation; Notice of Filing and Immediate Effectiveness of a Proposed Rule Change Relating to Technical Changes That Add or Correct Cross-References in Article VIII, Section 5 of the By-Laws and in Rule 910

April 20, 2005.

Pursuant to Section 19(b)(1) of the Securities Exchange Act of 1934 (''Act''),[1] notice is hereby given that on April 13, 2005, The Options Clearing Corporation (''OCC'') filed with the Securities and Exchange Commission (''Commission'') the proposed rule change as described in Items I, II, and III below, which items have been prepared primarily by OCC. The Commission is publishing this notice to solicit comments on the proposed rule change from interested persons.

I. Self-Regulatory Organization's Statement of the Terms of Substance of the Proposed Rule Change

The proposed rule change adds or corrects cross-references by making technical changes to Article VIII, Section 5 of OCC's By-Laws and to OCC Rule 910, respectively.

II. Self-Regulatory Organization's Statement of the Purpose of, and Statutory Basis for, the Proposed Rule Change

In its filing with the Commission, OCC included statements concerning the purpose of and basis for the proposed rule change and discussed any comments it received on the proposed rule change. The text of these statements may be examined at the places specified in Item IV below. OCC has prepared summaries, set forth in sections (A), (B), and (C) below, of the most significant aspects of such statements.[2]

(A) Self-Regulatory Organization's Statement of the Purpose of, and Statutory Basis for, the Proposed Rule Change

The purpose of the proposed rule change is to correct technical errors in Article VIII, Section 5(e) of OCC's By-Laws and in Rules 910(c) and (d).

In October 2004, the Commission approved a proposed rule change that revised Section 5(e) of Article VIII of OCC's By-Laws.[3] Article VIII of OCC's By-Laws pertains to the application of OCC's clearing fund. In its filing, OCC mistakenly deleted the designation of clause (i) of Section 5(e). The proposed rule change reinserts it.

In March 2004, the Commission approved a proposed rule change that significantly restructured and revised Chapter IX of OCC's Rules.[4] Chapter IX of OCC's Rules pertains to delivery settlement of exercised equity options and matured stock futures. In its filing, OCC neglected to change cross-references in Rules 910 (c) and (d) to paragraph (b). (Paragraph (d) was redesignated as paragraph (b) in that filing). The proposed rule change corrects those cross-references.

(B) Self-Regulatory Organization's Statement on Burden on Competition

OCC does not believe that the proposed rule change would impose any burden on competition.

(C) Self-Regulatory Organization's Statement on Comments on the Proposed Rule Change Received From Members, Participants, or Others

Written comments were not and are not intended to be solicited with respect to the proposed rule change, and none have been received.

III. Date of Effectiveness of the Proposed Rule Change and Timing for Commission Action

The foregoing rule change has become effective pursuant to Section 19(b)(3)(A)(iii) of the Act[5] and Rule 19b–4(f)(4)[6] thereunder because it effects a change that (i) does not adversely affect the safeguarding of securities or funds in the custody or control of the clearing agency or for which it is responsible and (ii) does not significantly affect the respective rights or obligations of the clearing agency or persons using the service. At any time within sixty days of the filing of the proposed rule change, the Commission may summarily abrogate the rule change if it appears to the Commission that such action is necessary or appropriate in the public interest, for the protection of investors, or otherwise in furtherance of the purposes of the Act.

[1] 15 U.S.C. 78s(b)(1).

[2] The Commission has modified parts of these statements.

[3] Securities Exchange Act Release No. 50526 (October 13, 2004), 69 FR 61701 (October 20, 2004) [File No. SR–OCC–2004–13].

[4] Securities Exchange Act Release No. 49420 (March 16, 2004), 69 FR 13345 (March 22, 2004) [File No. SR–OCC–2003–08].

[5] 15 U.S.C. 78s(b)(3)(A)(iii).

[6] 17 CFR 240.19b–4(f)(4).

IV. Solicitation of Comments

Interested persons are invited to submit written data, views, and arguments concerning the foregoing, including whether the proposed rule change is consistent with the Act. Comments may be submitted by any of the following methods:

Electronic Comments

- Use the Commission's Internet comment form (*http://www.sec.gov/rules/sro.shtml*) or
- Send an e-mail to *rule-comments@sec.gov.* Please include File Number SR–OCC–2005–05 on the subject line.

Paper Comments

- Send paper comments in triplicate to Jonathan G. Katz, Secretary, Securities and Exchange Commission, 450 Fifth Street, NW., Washington, DC 20549–0609.

All submissions should refer to File Number SR–OCC–2005–05. This file number should be included on the subject line if e-mail is used. To help the Commission process and review your comments more efficiently, please use only one method. The Commission will post all comments on the Commission's Internet Web site (*http://www.sec.gov/rules/sro.shtml*). Copies of the submission, all subsequent amendments, all written statements with respect to the proposed rule change that are filed with the Commission, and all written communications relating to the proposed rule change between the Commission and any person, other than those that may be withheld from the public in accordance with the provisions of 5 U.S.C. 552, will be available for inspection and copying in the Commission's Public Reference Section, 450 Fifth Street, NW., Washington, DC 20549. Copies of such filing also will be available for inspection and copying at the principal office of OCC and on OCC's Web site at *http://www.optionsclearing.com.* All comments received will be posted without change; the Commission does not edit personal identifying information from submissions. You should submit only information that you wish to make available publicly. All submissions should refer to File Number SR–OCC–2005–05 and should be submitted on or before May 17, 2005.

For the Commission, by the Division of Market Regulation, pursuant to delegated authority.[7]

Margaret H. McFarland,

Deputy Secretary.

[FR Doc. E5–1971 Filed 4–25–05; 8:45 am]

BILLING CODE 8010–01–P

SECURITIES AND EXCHANGE COMMISSION

[Release No. 34–51584; File No. SR-OCC–2005–04]

Self-Regulatory Organizations; The Options Clearing Corporation; Notice of Filing and Immediate Effectiveness of Proposed Rule Change To Modify Procedures With Respect to Deposits of Cash or Securities With an Escrow Bank for Short Positions in Stock Option or Index Option Contracts

April 20, 2005.

Pursuant to Section 19(b)(1) of the Securities Exchange Act of 1934 (''Act''),[1] notice is hereby given that on April 1, 2005, The Options Clearing Corporation (''OCC'') filed with the Securities and Exchange Commission (''Commission'') the proposed rule change described in Items I, II, and III below, which items have been prepared primarily by OCC. The Commission is publishing this notice to solicit comments on the rule change from interested parties.

I. Self-Regulatory Organization's Statement of the Terms of Substance of the Proposed Rule Change

The rule change modifies OCC's procedures with respect to deposits of cash or securities with an escrow bank for short positions in stock option or index option contracts.

II. Self-Regulatory Organization's Statement of the Purpose of, and Statutory Basis for, the Proposed Rule Change

In its filing with the Commission, OCC included statements concerning the purpose of and basis for the proposed rule change and discussed any comments it received on the proposed rule change. The text of these statements may be examined at the places specified in Item IV below. OCC has prepared summaries, set forth in sections (A), (B), and (C) below, of the most significant aspects of these statements.[2]

(A) Self-Regulatory Organization's Statement of the Purpose of, and Statutory Basis for, the Proposed Rule Change

OCC Rule 613 sets out procedures governing escrow deposits. Rule 613(f) currently provides that OCC will send to each clearing member by 9 a.m. Central Time on the first business day following each expiration date a list of each expired short position carried by that clearing member that was covered by an escrow deposit. By a prescribed deadline that same day, the clearing member is required to identify to OCC each short position on the list to which it has allocated an exercise notice. Based upon the information supplied by clearing members, by 9 a.m. Central Time the next business day OCC makes available to escrow banks and clearing members a final list of expired short positions covered by escrow deposits and indicates whether an exercise notice has been allocated to each such short position.

Rule 613(g) provides that OCC will release escrow deposits on its own initiative at 12 noon Central Time on the second business day following the expiration date with three exceptions. First, the release of an escrow deposit will be delayed if OCC is unable to produce the final list of expired short positions covered by escrow deposits within the time frame specified in its rules. Second, the release may be deferred if a clearing member carrying an expired short position covered by an escrow deposit fails to meet its margin or premium settlement obligations to OCC on the business day that the deposit would have been released. Third, if the final list shows that an exercise notice was allocated to an expired short position, the escrow deposit will not be released until 12 noon Central Time on the first business day after the exercise settlement date and can be delayed even further if National Securities Clearing Corporation (''NSCC'') notifies OCC that the clearing member has not met its settlement obligations. In that event, the deposit will not be released until the first business day after OCC receives confirmation that it has no further obligations to NSCC with respect to the short position or if OCC has directed that settlement be made other than through NSCC, until OCC receives confirmation that the settlement has been made.

The processing of escrow deposits at expiration will be substantially simplified under ENCORE Release 4.5. OCC's report of expired positions covered by escrow deposits, the clearing

---

[7] 17 CFR 200.30–3(a)(12).

[1] 15 U.S.C. 78s(b)(1).

[2] The Commission has modified the text of the summaries prepared by OCC.

member's identification of exercises allocated to those positions, and OCC's final list of expired short positions covered by an escrow deposit will all be eliminated. Instead, OCC will automatically release index option escrow deposits at 6 p.m. Central Time on the exercise settlement date, provided that the clearing member has met its settlement obligations in the account in which the escrow deposit is held. OCC will automatically release equity option escrow deposits at 6 p.m. on the business day after the exercise settlement date, provided that release may be delayed if NSCC notifies OCC that the clearing member has not met its settlement obligations. In that event, as under the existing rule, a deposit will not be released until OCC receives confirmation that it has no further obligations to NSCC with respect to the short position covered by the deposit. If OCC directs that settlement be made other than through NSCC, the deposit will not be released until OCC receives confirmation that settlement had been made. Clearing members or escrow banks still will be permitted to withdraw escrow deposits prior to the scheduled release time if the clearing member maintains sufficient margin with OCC after making the withdrawal.

OCC's Proposed Rule Changes

In connection with the simplification of the escrow deposit system resulting from the installation of ENCORE Release 4.5, OCC is deleting Rule 613(f), which describes the various reports relating to expired short positions covered by escrow deposits. In addition, OCC is amending current Rule 613(g), which is redesignated as Rule 613(f), to change the time OCC will release equity option escrow deposits on its own initiative and to eliminate references to the final list of expired short positions covered by an escrow deposit provided for by current Rule 613(f). OCC is amending Rule 613(j) to delete references to the list of expired short positions covered by an escrow deposit, redesignating it as 613(i), and revising the reference to current Rule 613(i), which is being redesignated as Rule 613(h). Rule 613(k) is redesignated as Rule 613(j).

With respect to index option deposits, OCC is adding a new Rule 1801(h) to provide that index option deposits will be released by OCC on its own initiative at 6 p.m. Central Time on the exercise settlement date so long as the clearing member has fully complied with its settlement obligations in the account in which the escrow deposit is held. The remaining subparagraphs of Rule 1801 are redesignated but are otherwise unchanged.

Amended and Restated On-Line Escrow Deposit Agreement

Finally, OCC is amending the Amended and Restated On-Line Escrow Deposit Agreement entered into between it and banks participating in its escrow deposit program to reflect the procedural changes to the escrow deposit program described above.

OCC believes the rule change is consistent with Section 17A of the Act [3], as amended because it more closely aligns the procedures for the processing of releases of escrow deposits for expired short positions with the processing of releases of specific deposits and thereby improves the consistency and efficiency of such processing for OCC, clearing members, and custodian banks. The rule change is not inconsistent with the existing rules of OCC, including any other rules proposed to be amended.

(B) Self-Regulatory Organization's Statement on Burden on Competition

OCC does not believe that the proposed rule change will have an impact or impose any burden on competition.

(C) Self-Regulatory Organization's Statement on Comments on the Proposed Rule Change Received From Members, Participants, or Others

Written comments were not and are not intended to be solicited with respect to the proposed rule change, and none have been received.

III. Date of Effectiveness of the Proposed Rule Change and Timing for Commission Action

The foregoing proposed rule change has become effective upon filing pursuant to Section 19(b)(3)(A) of the Act [4] and Rule 19b–4(f) [5] thereunder because it does not significantly affect the respective rights or obligations of the clearing agency or persons using the service and does not adversely affect the safeguarding of securities or funds in the custody or control of OCC or for which it is responsible. At any time within sixty days of the filing of the proposed rule change, the Commission may summarily abrogate such rule change if it appears to the Commission that such action is necessary or appropriate in the public interest, for the protection of investors, or otherwise in furtherance of the purposes of the Act.

[3] 15 U.S.C. 78q–1.

[4] 15 U.S.C. 78s(b)(3)(A).

[5] 17 CFR 240.19b–4(f).

IV. Solicitation of Comments

Interested persons are invited to submit written data, views, and arguments concerning the foregoing, including whether the proposed rule change is consistent with the Act. Comments may be submitted by any of the following methods:

Electronic Comments

- Use the Commission's Internet comment form (*http://www.sec.gov/rules/sro.shtml*) or
- Send an e-mail to *rule-comments@sec.gov.* Please include File Number SR–OCC–2005–04 on the subject line.

Paper Comments

- Send paper comments in triplicate to Jonathan G. Katz, Secretary, Securities and Exchange Commission, 450 Fifth Street, NW., Washington, DC 20549–0609.

All submissions should refer to File Number SR–OCC–2005–04. This file number should be included on the subject line if e-mail is used. To help the Commission process and review your comments more efficiently, please use only one method. The Commission will post all comments on the Commission's Internet Web site (*http://www.sec.gov/rules/sro.shtml*). Copies of the submission, all subsequent amendments, all written statements with respect to the proposed rule change that are filed with the Commission, and all written communications relating to the proposed rule change between the Commission and any person, other than those that may be withheld from the public in accordance with the provisions of 5 U.S.C. 552, will be available for inspection and copying in the Commission's Public Reference Section, 450 Fifth Street, NW., Washington, DC 20549. Copies of such filings also will be available for inspection and copying at the principal office of OCC and on OCC's Web site at *http://www.optionsclearing.com.* All comments received will be posted without change; the Commission does not edit personal identifying information from submissions. You should submit only information that you wish to make available publicly.

All submissions should refer to File Number SR–OCC–2005–04 and should be submitted on or before May 17, 2005.

For the Commission by the Division of Market Regulation, pursuant to delegated authority.[6]

Margaret H. McFarland,

Deputy Secretary.

[FR Doc. E5–1972 Filed 4–25–05; 8:45 am]

BILLING CODE 8010–01–P

SECURITIES AND EXCHANGE COMMISSION

[Release No. 34–51576; File No. SR–PCX–2005–35]

Self-Regulatory Organizations; Notice of Filing and Immediate Effectiveness of Proposed Rule Change by the Pacific Exchange, Inc. Relating to the SizeQuote Mechanism for the Execution of Large-Sized Orders in Open Outcry

April 19, 2005.

Pursuant to section 19(b)(1) of the Securities Exchange Act of 1934 (''Act'')[1] and Rule 19b–4 thereunder,[2] notice is hereby given that on April 7, 2005, the Pacific Exchange, Inc. (''PCX'' or ''Exchange'') filed with the Securities and Exchange Commission (''Commission'') the proposed rule change as described in items I and II below, which items have been prepared by the Exchange. The PCX filed the proposal pursuant to section 19(b)(3)(A) under the Act,[3] and Rule 19b–4(f)(6) thereunder,[4] which renders the proposal effective upon filing with the Commission.[5] The Commission is publishing this notice to solicit comments on the proposed rule change from interested persons.

I. Self-Regulatory Organization's Statement of the Terms of Substance of the Proposed Rule Change

The Exchange proposes to add PCX Rule 6.47(g) to adopt, on a pilot basis through February 15, 2006, a SizeQuote Mechanism for the execution of large-sized orders in open outcry. The text of the proposed rule change is below. Proposed new language is in *italics.*

Rules of the Pacific Exchange, Inc.

Rule 6

Rule 6.47(a)–(f)—No Change.

Rule 6.47(g)—Open Outcry ''SizeQuote'' Mechanism.

(i) SizeQuotes Generally. The SizeQuote Mechanism is a process by which a Floor Broker (''FB'') may execute and facilitate large-sized orders in open outcry. Floor brokers must be willing to facilitate the entire size of the order for which they request SizeQuotes (the ''SizeQuote Order''). The Exchange shall determine the classes in which the SizeQuote Mechanism will apply. The SizeQuote Mechanism will operate as a pilot program which expires February 15, 2006.

(A) Eligible Order Size: The Exchange shall establish the eligible order size however such size shall not be less than 250 contracts.

(B) Trading Crowd: The term ''Trading Crowd'' shall be as defined in PCX Rule 6.1(b)(30) and for purposes of this rule only shall also include any Floor Broker who is present at the trading post.

(C) Public Customer Priority: Public customer orders in the Consolidated Book have priority to trade with a SizeQuote Order over any member of the Trading Crowd providing a SizeQuote response at the same price as the order in the Consolidated Book.

(D) LMM Participation Rights: The LMM participation entitlement shall not apply to SizeQuote transactions.

(E) FBs may not execute a SizeQuote Order at a price inferior to the national best bid or offer (''NBBO''). Unless a SizeQuote request is properly canceled in accordance with paragraph (iv), an FB is obligated to execute the entire SizeQuote Order at a price that is not inferior to the NBBO in situations where there are no SizeQuote responses received or where such responses are inferior to the NBBO.

(ii) SizeQuote Procedure: Upon request from an FB for a SizeQuote, members of the Trading Crowd may respond with indications of the price and size at which they would be willing to trade with a SizeQuote Order. After the conclusion of time during which interested Trading Crowd members have been given the opportunity to provide their indications, the FB must execute the SizeQuote Order with the members of the Trading Crowd and/or with a firm facilitation order in accordance with the following procedures:

(A) Executing the Order at the Trading Crowd's Best Price: Members of the Trading Crowd that provide SizeQuote responses at the highest bid or lowest offer (''best price'') have priority to trade with the SizeQuote Order at that best price. Allocation of the order among members of the Trading Crowd shall be pro rata, up to the size of each member's SizeQuote response. The FB must trade at the best price any contracts remaining in the original SizeQuote Order that were not executed by the members of the Trading Crowd providing SizeQuote responses.

(B) Executing the Order at a Price that Improves upon the Trading Crowd's Price by One Minimum Increment: Members of the Trading Crowd that provide SizeQuote responses at the best price (''Eligible Trading Crowd Members'') have priority to trade with the SizeQuote Order at a price equal to one trading increment better than the best price (''improved best price''). Allocation of the order among Eligible Trading Crowd Members at the improved best price shall be pro rata, up to the size of each eligible Trading Crowd Member's SizeQuote response. The FB must trade at the improved best price any contracts remaining in the original SizeQuote Order that were not executed by Eligible Trading Crowd Members.

(C) Trading at a Price that Improves upon the Trading Crowd's Price by more than One Minimum Increment: An FB may execute the entire SizeQuote Order at a price two trading increments better than the best price communicated by the Trading Crowd members in their responses to the SizeQuote request.

(iii) Definition of Trading Increments: Permissible trading increments are $0.05 for options quoted below $3.00 and $0.10 for all others. In classes in which bid-ask relief is granted pursuant to Rule 6.37(b)(1)(F), the permissible trading increments shall also increase by the corresponding amount. For example, if a series trading above $3.00 has double-width bid-ask relief, the permissible trading increment for purposes of this rule shall be $0.20.

(iv) It will be a violation of the FB's duty of best execution to its customer if it were to cancel a SizeQuote Order to avoid execution of the order at a better price. The availability of the SizeQuote Mechanism does not alter an FB's best execution duty to get the best price for its customer. A SizeQuote request can be canceled prior to the receipt by the FB of responses to the SizeQuote request. Once the FB receives a response to the SizeQuote request, if he/she were to cancel the order and then subsequently attempt to execute the order at an inferior price to the previous SizeQuote response, there would be a presumption that the FB did so to avoid execution of its customer order in whole or in part by the others at the better price.

* * * * *

[6] 17 CFR 200.30–3(a)(12).

[1] 15 U.S.C. 78s(b)(1).

[2] 17 CFR 240.19b–4.

[3] 15 U.S.C. 78s(b)(3)(A).

[4] 17 CFR 240.19b–4(f)(6).

[5] The PCX has asked the Commission to waive the 30-day operative delay. *See* Rule 19b–4(f)(6)(iii), 17 CFR 240.19b–4(f)(6)(iii).

II. Self-Regulatory Organization's Statement of the Purpose of, and Statutory Basis for, the Proposed Rule Change

In its filing with the Commission, the Exchange included statements concerning the purpose of and basis for the proposed rule change and discussed any comments it received on the proposed rule change. The text of these statements may be examined at the places specified in item IV below. The PCX has prepared summaries, set forth in sections A, B and C below, of the most significant aspects of such statements.

A. Self-Regulatory Organization's Statement of the Purpose of, and Statutory Basis for, the Proposed Rule Change

1. Purpose

PCX rules impose several obligations upon Floor Brokers (''FBs'') including the requirement in paragraph (a) of PCX Rule 6.46, ''Responsibilities of Floor Brokers,'' that a FB handling an order use due diligence to execute the order at the best price or prices available. PCX Rule 6.46, Commentary .01, supplements this requirement by requiring FBs to ascertain whether a better price than is being displayed at that time is being quoted by another FB or a Market Maker. In order to assist FBs in their exercise of due diligence, the Exchange believes it would be beneficial to adopt new procedures governing the execution of certain large-sized orders, which by virtue of their large size often require specialized handling. The purpose of this rule filing, therefore, is to adopt, on a pilot basis through February 15, 2006, a trading procedure mechanism called the SizeQuote Mechanism for use by FBs in their respective representation of large-sized orders in open outcry.

The SizeQuote Mechanism is a process by which a FB, in his/her exercise of due diligence to execute orders at the best price(s), may execute and facilitate large-sized orders in open outcry. For purposes of this rule, the minimum qualifying order size is 250 contracts[6] and FBs must stand ready to facilitate the entire size of the order for which they request SizeQuotes (the ''SizeQuote Order''). The SizeQuote procedure works as follows:

A FB holding an order for at least 250 contracts must specifically request a SizeQuote from the Trading Crowd.[7] Upon such a request by a FB, any member of the Trading Crowd may respond with indications of the price and size at which they would be willing to trade with a SizeQuote Order. A member of the Trading Crowd may respond with any size and price they desire (subject to the rules governing the current market maker obligation requirements) and as such are not obligated to respond with a size of at least 250 contracts. The proposal provides that FBs may not execute a SizeQuote Order at a price inferior to the National Best Bid or Offer (''NBBO''). Proposed paragraph (g)(i)(E) clarifies that unless a SizeQuote request is properly canceled in accordance with paragraph (iv), a FB is obligated to execute the entire SizeQuote Order at a price that is not inferior to the NBBO in situations where there are no SizeQuote responses received or where such responses are inferior to the NBBO.

After the conclusion of time during which interested Trading Crowd members have been given the opportunity to provide their indications, the FB will execute the SizeQuote Order he is holding with a Trading Crowd member(s) or with a facilitation order, or both, in accordance with the following procedure:[8]

Executing the SizeQuote Order at the Trading Crowd's best price: The Trading Crowd member(s) that provided SizeQuote responses at the highest bid or lowest offer (''best price'') have priority to trade with the SizeQuote Order at that best price. For example, assume a FB requests a SizeQuote and a Trading Crowd member(s) responds with a market quote of $1.00–$1.20 for 1,000 contracts. This quote constitutes the ''best price'' and those Trading Crowd members that responded have priority at those prices.[9] If the FB chooses to trade at either of those prices, the SizeQuote Order will be allocated pro-rata to those Trading Crowd members that responded with a quote at the best price, up to the size of their respective quotes.[10] If in the above example the SizeQuote Order is for more than 1,000 contracts, the FB must trade the balance with a facilitation order at the best price. Trading Crowd members that did not respond to the SizeQuote request would not be eligible to participate in the allocation of this trade.

Executing the order at a price that improves upon the Trading Crowd's price by one minimum increment: Trading Crowd members that provide SizeQuote responses at the best price (''Eligible Trading Crowd Members'') have priority to trade with the SizeQuote Order at a price equal to one minimum increment better than the best price (''Improved Best Price''). Accordingly, using the example above, Eligible Trading Crowd Members, if they desire, have priority at prices of $1.05 and $1.15 for up to 1,000 contracts.[11] If the FB chooses to trade at either of those prices, the SizeQuote Order will be allocated pro-rata at the Improved Best Price to those Eligible Trading Crowd Members that responded with a quote at the best price, up to the size of their respective quotes. If the SizeQuote Order is for more than 1,000 contracts, the FB must trade the balance with a facilitation order at the Improved Best Price. Trading Crowd members that did not respond to the SizeQuote request would not be eligible to participate in the allocation of this trade.

Trading at a price that improves upon the Trading Crowd's price by more than one minimum increment: A FB may execute the entire SizeQuote Order with a facilitation order at a price two minimum increments better than the best price communicated by the Trading Crowd members in their responses to the SizeQuote request. Using the example above, a FB could trade the SizeQuote Order with a facilitation order at $1.10. Trading Crowd members would not be able to participate in the trade at that price.

The Exchange also proposes to adopt new paragraph (iv) to explicitly state that it will be a violation of the FB's duty of best execution to its customer if it were to cancel a SizeQuote Order to avoid execution of the order at a better price. The availability of the SizeQuote Mechanism does not alter a FB's best execution duty to get the best price for its customer. A SizeQuote request can

[6] The Exchange will determine the classes in which SizeQuote operates and may vary the minimum qualifying order size, provided such number may not be less than 250 contracts.

[7] *See* paragraph (b)(3) of PCX Rule 6.1, ''Applicability, Definitions and References.'' For purposes of the proposed rule only, the definition of ''Trading Crowd'' shall also include Floor Brokers who are present at the trading post.

[8] The FB will execute the SizeQuote Order either with Trading Crowd members or with a firm facilitation order, or both, in accordance with the requirements of proposed PCX Rule 6.7(g)(ii).

[9] Public customers in the Consolidated Book have priority to trade with a SizeQuote Order over any Trading Crowd member providing a SizeQuote response at the same price as the order in the Consolidated Book. *See* proposed PCX Rule 6.47(g)(i)(C). This example assumes there are no public customer orders at the SizeQuote response price.

[10] There will be no Lead Market Maker (''LMM'') participation entitlement in SizeQuote trades, even if the LMM is among the Trading Crowd members quoting at the best price.

[11] Obviously, there is no obligation requiring a Trading Crowd member to trade at a price that is better than his/her verbal quote.

be cancelled prior to the receipt by the FB of responses to the SizeQuote request. Once the FB receives a response to the SizeQuote request, if he/she were to cancel the order and then subsequently attempt to execute the order at an inferior price to the previous SizeQuote response, there would be a presumption that the FB did so to avoid execution of its customer order in whole or in part by others at the better price.

The Exchange represents that it will provide the Commission at the end of the pilot period a report summarizing the effectiveness of the SizeQuote program. Pending a report that indicates that the SizeQuote program has been successful, the Exchange anticipates submitting a rule filing that either requests extension of the SizeQuote program or permanent approval of the pilot.

The Exchange believes that the SizeQuote proposal provides a well balanced mechanism that enhances the Trading Crowd's ability to quote competitively and participate in open outcry trades while at the same time creating a process that gives greater certainty to FBs in the execution of large orders. Under the proposal, Trading Crowd members not only will have priority at the price of the quote they give in response to a SizeQuote request, but they also will have priority, if they want it, at a price that is one trading increment better than their quote. FBs will now have more certainty in that Trading Crowd members will have one opportunity to respond with a quote response and if they do not, they will not participate in the trade. Moreover, once a Trading Crowd member gives his/her best price (*i.e.*, SizeQuote response), he/she may not subsequently change the terms of that response after the FB announces its intention to trade, although the Trading Crowd member will have priority at a price that is one trading increment better than his/her quote. This further enhances a Trading Crowd member's incentives to quote competitively.

The Exchange also believes that the proposal enhances a Trading Crowd member's incentive to quote competitively by giving complete priority at not only his/her price but also at one trading increment better than his/her SizeQuote response.

2. Basis

For the above reasons, the Exchange believes that the proposed rule change would enhance competition. The Exchange believes that the proposed rule change is consistent with section 6(b) [12] of the Act, in general, and furthers the objectives of section 6(b)(5),[13] in particular, in that it is designed to facilitate transactions in securities, to promote just and equitable principles of trade and to protect investors and the public interest.

B. Self-Regulatory Organization's Statement on Burden on Competition

The Exchange does not believe that the proposed rule change will impose any burden on competition that is not necessary or appropriate in furtherance of the purposes of the Act.

C. Self-Regulatory Organization's Statement on Comments on the Proposed Rule Change Received From Members, Participants, or Others

Written comments on the proposed rule change were neither solicited nor received.

III. Date of Effectiveness of the Proposed Rule Change and Timing for Commission Action

The Exchange has filed the proposed rule change pursuant to section 19(b)(3)(A) of the Act [14] and subparagraph (f)(6) of Rule 19b–4 thereunder.[15] Because the foregoing proposed rule change: (1) Does not significantly affect the protection of investors or the public interest; (2) does not impose any significant burden on competition; and (3) does not become operative for 30 days from the date on which it was filed, or such shorter time as the Commission may designate if consistent with the protection of investors and the public interest, the proposed rule change has become effective pursuant to section 19(b)(3)(A) of the Act and Rule 19b–4(f)(6) thereunder. As required under Rule 19b–4(f)(6)(iii), the PCX provided the Commission with written notice of its intent to file the proposed rule change at least five business days prior to the filing of the proposal with the Commission or such shorter period as designated by the Commission.

A proposed rule change filed under Rule 19b–4(f)(6) generally does not become operative prior to 30 days after the date of filing. However, Rule 19b–4(f)(6)(iii) permits the Commission to designate a shorter time if such action is consistent with the protection of investors and the public interest. The PCX has requested that the Commission waive the 30-day operative delay specified in Rule 19b–4(f)(6) because the PCX's proposal is similar to the SizeQuote Mechanism provided under the rules of the Chicago Board Options Exchange, Incorporated (''CBOE'').[16] Accordingly, the PCX believes that the proposal will allow for a more efficient and effective market operation and is necessary for competitive purposes.

The Commission believes that waiving the 30-day operative delay is consistent with the protection of investors and the public interest because the proposed rule change is substantially similar to a rule adopted previously by the CBOE.[17] The CBOE's proposed rule was published for comment and the Commission received no comments regarding the CBOE's proposal. The Commission believes that the PCX's proposal raises no new issues or regulatory concerns that the Commission did not consider in approving the CBOE's proposal. For this reason, the Commission believes that waving the 30-day operative delay is consistent with the protections of investors and the public interest, and the Commission designates the proposal to be operative immediately on a pilot basis through February 15, 2006.

At any time within 60 days of the filing of such proposed rule change, the Commission may summarily abrogate such rule change if it appears to the Commission that such action is necessary or appropriate in the public interest, for the protection of investors, or otherwise in furtherance of the purposes of the Act.

IV. Solicitation of Comments

Interested persons are invited to submit written data, views, and arguments concerning the foregoing, including whether the proposed rule change is consistent with the Act. Comments may be submitted by any of the following methods:

Electronic Comments

- Use the Commission's Internet comment form (*http://www.sec.gov/rules/sro.shtml*); or
- Send an e-mail to *rule-comments@sec.gov.* Please include File Number SR–PCX–2005–35 on the subject line.

Paper Comments

- Send paper comments in triplicate to Jonathan G. Katz, Secretary,

[12] 15 U.S.C. 78f(b).

[13] 15 U.S.C. 78f(b)(5).

[14] 15 U.S.C. 78s(b)(3)(A).

[15] 17 CFR 240.19b–4(f)(6).

[16] *See* CBOE Rule 6.74(f) and Securities Exchange Act Release No. 51205 (February 15, 2005) 70 FR 8647 (February 22, 2005) (order approving File No. SR–CBOE–2004–72) (''CBOE Order'').

[17] *See* CBOE Rule 6.74(f) and CBOE Order, *supra* note 16. For purposes of waiving the 30-day operative delay, the Commission has considered the proposed rule's impact on efficiency, competition, and capital formation. 15 U.S.C. 78c(f).

Securities and Exchange Commission, 450 Fifth Street, NW., Washington, DC 20549–0609.

All submissions should refer to File Number SR–PCX–2005–35. This file number should be included on the subject line if e-mail is used. To help the Commission process and review your comments more efficiently, please use only one method. The Commission will post all comments on the Commission's Internet Web site (*http://www.sec.gov/rules/sro.shtml*). Copies of the submission, all subsequent amendments, all written statements with respect to the proposed rule change that are filed with the Commission, and all written communications relating to the proposed rule change between the Commission and any person, other than those that may be withheld from the public in accordance with the provisions of 5 U.S.C. 552, will be available for inspection and copying in the Commission's Public Reference Section. Copies of such filing also will be available for inspection and copying at the principal office of the Exchange. All comments received will be posted without change; the Commission does not edit personal identifying information from submissions. You should submit only information that you wish to make available publicly. All submissions should refer to File Number SR–PCX–2005–35 and should be submitted on or before May 17, 2005.

For the Commission, by the Division of Market Regulation, pursuant to delegated authority.[18]

Margaret H. McFarland,

Deputy Secretary.

[FR Doc. E5–1964 Filed 4–25–05; 8:45 am]

BILLING CODE 8010–01–P

[18] 17 CFR 200.30–3(a)(12).

DEPARTMENT OF STATE

[Public Notice 5024]

U.S. National Commission for UNESCO Notice of Meeting

The U.S. National Commission for UNESCO will meet in open FACA session on Tuesday, June 7, 2005, at Georgetown University, Washington, DC from 10 until 12:30. The commission will also have a series of informational plenary and panel subject committee sessions on Monday, June 6 and Tuesday morning to which the public may attend. This will be the first annual conference of the re-established commission in nearly twenty years. The mission of the national commission is to advise the Department of State with respect to the consideration of issues related to education, science, communications, and culture and the formulation and implementation of U.S. policy towards UNESCO. At this meeting, the commission plans to establish work plans for its five (education, culture, natural science, social and human science, and communications and information) committees.

Members of the public who wish to attend the meeting must contact the U.S. National Commission for UNESCO no later than Friday, May 20th for further information about admission as seating is limited. Additionally, those who wish to make oral comments or deliver written comments should also request to be scheduled, and submit a written text of the comments by Friday, May 20th to allow time for distribution to the Commission members prior to the meeting. Individual oral comments will be limited to five minutes, with the total oral comment period not exceeding thirty-minutes. The national commission may be contacted via e-mail at *DCUNESCO@state.gov*, or via phone at (202) 663–0026.

Dated: April 20, 2005.

Alexander Zemek,

Deputy Executive Secretary, U.S. National Commission for UNESO, Department of State.

[FR Doc. 05–8306 Filed 4–25–05; 8:45 am]

BILLING CODE 4710–19–P

DEPARTMENT OF TRANSPORTATION

Federal Highway Administration

Environmental Impact Statement for the South Capitol Street Roadway Improvement and Bridge Replacement Project

AGENCY: Federal Highway Administration (FHWA), DOT.

ACTION: Notice of Intent to Prepare a Draft Environmental Impact Statement (DEIS).

SUMMARY: The Federal Highway Administration (FHWA) in coordination with the District Department of Transportation (DDOT) in Washington, DC is issuing this notice to advise agencies and the public that a Draft Environmental Impact Statement (DEIS) to assess the impacts of potential effects of proposed transportation improvements in the South Capitol Street Corridor is being prepared.

FOR FURTHER INFORMATION CONTACT: Federal Highway Administration, District of Columbia Division: Mr. Michael Hicks, Environmental/Urban Engineer, 1900 K Street, Suite 510, Washington, DC 20006–1103, (202) 219–3513; or Mr. John Deatrick, Deputy Director/Chief Engineer, District of Columbia, Department of Transportation, (202–671–2800).

SUPPLEMENTARY INFORMATION: The environmental review of transportation improvement alternatives in the South Capitol Street Corridor will be conducted in accordance with the requirements of the National Environmental Policy Act (NEPA) of 1969, as amended (42 U.S.C. 4371, et seq.), Council on Environmental Quality (CEQ) regulations (40 CFR parts 1500–1508), FHWA Code of Federal Regulations (23 CFR 771.101–771.137, et seq.), and all applicable Federal, State, and local government laws, regulations, and policies.

Public Scoping Meetings

DDOT will solicit public comments for consideration and possible incorporation in the DEIS through public scoping, including scoping meetings, on the proposed improvements. To ensure that the full ranges of issues related to this proposed action are addressed and all significant issues are identified early in the process, comments and suggestions are invited from all interested and/or potentially affected parties. These individuals or groups are invited to attend the public scoping meeting. The meeting location and time will be publicized in local newspapers and elsewhere. Written comments will be accepted throughout this process and can be forwarded to the address provided above.

Meeting dates, times, and locations will be announced on the project Web-site accessible at *http://www.SouthCapitolEIS.com* and in the following newspapers: The Washington Post, The Washington Times, The Hill Rag, East of the River, The Southwester, and La Nacion USA.

Scoping materials will be available at the meetings and may also be obtained in advance of the meetings by contacting Mr. John Deatrick. Scoping materials will be made available on the project web-site. Oral and written comments may be given at the scoping meetings. Comments may also be sent to the address above. A stenographer will be available at the meetings to record comments. Scoping information will be made available in both English and Spanish.

Description of Primary Study Area and Transportation Needs

The South Capitol Street Corridor is located in the southwest and southeast

quadrants of the District of Columbia. The South Capitol Street Corridor extends from Martin Luther King, Jr. Avenue to the U.S. Capitol in Washington, DC along South Capitol Street. Proposed improvements, including improvements to the Frederick Douglass Memorial Bridge, would be made between Suitland Parkway at Martin Luther King, Jr. Avenue and Independence Avenue, and New Jersey Avenue between M Street, SE., and Independence Avenue.

The purpose of the South Capitol Street project is to create a new gateway. This gateway will consist of a balanced, sustainable, multimodal transportation network that knits neighborhoods together and facilitates the movement of commuters with minimal impact on the surrounding neighborhoods. The South Capitol Street Corridor, as defined in the AWI Framework Plan, is intended to provide better access to waterfront areas east and west of the river, including Poplar Point and Buzzard Point, and better serve historic Anacostia, and near southeast and southwest neighborhoods. The future Anacostia Waterfront will include a cleaner river, sustainable waterfront neighborhoods, new and revitalized waterfront parks, and vibrant cultural attractions. The creation of new transit stops and pedestrian facilities where none exist, due to physical barriers along South Capitol Street and Suitland Parkway, will create new opportunities for movement throughout the corridor. Without improvements to facilitate the efficient traffic flow of all modes, the level and duration of congestion will continue to deteriorate throughout the corridor.

The project includes the proposed redevelopment of South Capitol Street per, the National Capital Planning Commission's 1997 plan, Extending the Legacy, Planning America's Capital for the 21st Century. The plan includes South Capitol Street as a civic gateway to central Washington providing a mix of shopping, housing, and offices. It also proposes replacing the Frederick Douglass Memorial Bridge with a new six-lane span that would accommodate pedestrians and bicycles. The 2003 South Capitol Gateway and Corridor Improvement Study, completed under congressional direction, expressed the challenges and opportunities for this corridor including disinvestments, traffic functionality, local access, and the general need to restore this corridor to its original intent as a grand gateway to the nation's capital.

The Anacostia Waterfront Initiative (AWI) seeks to restore the river's water quality, reclaim the waterfront as a magnet of activity, and stimulate sustainable development in waterfront neighborhoods. The development of the South Capitol Street Corridor is an important early step in the reinvestment and reclamation process. There is also a need to support the development of new mixed-use development and employment in the corridor that benefits existing residents, providing transportation support for a variety of new housing and economic development activities. Development in the Southeast Federal Center and Washington Navy Yard, as well as construction of the proposed ballpark and on Buzzard Point, will be adding large numbers of jobs and creating new residential neighborhoods. Early traffic estimates project the addition of 3,250 vehicles and 7,800 pedestrians during ballpark events. The corridor could enhance the vitality and safety of the District's roads and neighborhoods around them, by creating places and destinations for pedestrians and bicycles.

(Catalog of Federal Domestic Assistance Program Number 20.205 Highway Planning and Construction. The regulations and implementing Executive Order 12372 regarding intergovernmental consultation on Federal programs and activities apply to this program)

Authority 23 U.S.C. 315; 49 CFR 1.48.

Issued on: April 21, 2005.

Gary L. Henderson,

Division Administrator, District of Columbia Division, Federal Highway Administration.

[FR Doc. 05–8330 Filed 4–25–05; 8:45 am]

BILLING CODE 4910–22–P

DEPARTMENT OF TRANSPORTATION

National Highway Traffic Safety Administration

[Docket No. NHTSA 2005–20274; Notice 2]

Workhorse Custom Chassis, Grant of Petition for Decision of Inconsequential Noncompliance

Workhorse Custom Chassis (Workhorse) has determined that certain incomplete motor home chassis it produced in 2000 through 2004 do not comply with S3.1.4.1 of 49 CFR 571.102, Federal Motor Vehicle Safety Standard (FMVSS) No. 102, ''Transmission shift lever sequence, starter interlock, and transmission braking effect.'' Pursuant to 49 U.S.C. 30118(d) and 30120(h), Workhorse has petitioned for a determination that this noncompliance is inconsequential to motor vehicle safety and has filed an appropriate report pursuant to 49 CFR part 573, ''Defect and Noncompliance Reports.'' Notice of receipt of a petition was published, with a 30-day comment period, on March 2, 2005, in the **Federal Register** (70 FR 10164). NHTSA received no comments.

Affected are a total of approximately 42,524 incomplete motor home chassis built between July 2000 and December 31, 2004. S3.1.4.1 of FMVSS No. 102 requires that

> If the transmission shift lever sequence includes a park position, identification of shift lever positions * * * shall be displayed in view of the driver whenever any of the following conditions exist: (a) The ignition is in a position where the transmission can be shifted. (b) The transmission is not in park.

Workhorse described its noncompliance as follows:

> In these vehicles when the ignition key is in the ''OFF'' position, the selected gear position is not displayed. ''OFF'' is a position not displayed, but located between lock and run. The gear selector lever can be moved while the ignition switch is in ''OFF.''

Workhorse believes that this noncompliance is inconsequential to motor vehicle safety and that no corrective action is warranted. Workhorse stated that:

> [T]he vehicles will be in compliance with FMVSS No. 102 during normal ignition activation and vehicle operation. Workhorse believes that the purpose of the rule is to provide the driver with transmission position information for the vehicle conditions where such information can reduce the likelihood of shifting errors. This occurs primarily when the engine is running, and Workhorse's PRNDL is always visible when the engine is running.
>
> Should the shift lever be in any position other than park or neutral, the ignition will not start. * * * Should the Workhorse vehicle be in neutral at the time the ignition is turned to start, the display will immediately come on and be visible to the driver.
>
> There are a number of safeguards to preclude the driver from leaving the vehicle with the vehicle in a position other than in the park position. First, if the driver should attempt to remove the key, the driver will discover that the vehicle is not in park because the key may not be removed. * * * If the driver were to attempt to leave the vehicle without removing the key, the audible warning required by FMVSS No. 114 would immediately sound reminding the driver that the key is still in the vehicle.

Workhorse stated that this situation is substantially the same as for two petitions which NHTSA granted, one from General Motors (58 FR 33296, June 16, 1993) and the second from Nissan Motors (64 FR 38701, June 19, 1999). Workhorse said, ''In both of those cases, the PRNDL display would not be illuminated if the transmission was left in a position other than 'park' when the ignition key was turned to 'OFF.' ''

Workhorse stated that it has no customer complaints or accident reports related to the noncompliance.

NHTSA agrees with Workhorse that the noncompliance is inconsequential to motor vehicle safety. As the agency noted in proposing the current version of the standard (49 FR 32409, August 25, 1988), the purpose of the display requirement is to ''provide the driver with transmission position information for the vehicle conditions where such information can reduce the likelihood of shifting errors.'' In all but the rarest circumstances, the primary function of the transmission display is to inform the driver of gear selection and relative position of the gears while the engine is running. In this case, the selected gear position and PRNDL display are always visible when the engine is running. Therefore, as Workhorse stated, the vehicles will be in compliance with FMVSS No. 102 during normal ignition activation and vehicle operation.

Workhorse is correct that the two petitions it cited, from Nissan and General Motors, were granted by NHTSA based on this rationale. The Workhorse vehicles at issue here comply with all other requirements of FMVSS No. 102. Workhorse has corrected the problem.

In consideration of the foregoing, NHTSA has decided that the petitioner has met its burden of persuasion that the noncompliance described is inconsequential to motor vehicle safety. Accordingly, Workhorse's petition is granted and the petitioner is exempted from the obligation of providing notification of, and a remedy for, the noncompliance.

Authority: 49 U.S.C. 30118, 30120; delegations of authority at CFR 1.50 and 501.8.

Issued on: April 20, 2005.

Ronald L. Medford,

Senior Associate Administrator for Vehicle Safety.

[FR Doc. 05–8264 Filed 4–25–05; 8:45 am]

BILLING CODE 4910–59–P

DEPARTMENT OF TRANSPORTATION

National Highway Traffic Safety Administration

[Docket No. NHTSA 2005–20428; Notice 2]

Hankook Tire America Corp., Grant of Petition for Decision of Inconsequential Noncompliance

Hankook Tire America Corp. (Hankook) has determined that certain tires it produced in 2003 and 2004 do not comply with S6.5(d) of Federal Motor Vehicle Safety Standard (FMVSS) No. 119, ''New pneumatic tires for vehicles other than passenger cars.'' Pursuant to 49 U.S.C. 30118(d) and 30120(h), Hankook has petitioned for a determination that this noncompliance is inconsequential to motor vehicle safety and has filed an appropriate report pursuant to 49 CFR part 573, ''Defect and Noncompliance Reports.'' Notice of receipt of a petition was published, with a 30-day comment period, on March 9, 2005, in the **Federal Register** (70 FR 11728). NHTSA received no comments.

A total of approximately 41,716 tires are involved, which were produced during the period April 1, 2003 through December 20, 2004. S6.5(d) of FMVSS No. 119 requires that the maximum load rating and corresponding inflation pressure of the tires be marked on the tire in both English and metric units. The noncompliant tires do not have the metric markings.

Hankook believes that the noncompliance is inconsequential to motor vehicle safety and that no corrective action is warranted. Hankook states that the noncompliance does not relate to motor vehicle safety, and that the problem has been corrected either by discontinuation or change of the mold of the affected tires.

NHTSA agrees that the noncompliance is inconsequential to safety. The correct English unit information required by FMVSS No. 119 is provided and therefore is likely to achieve the safety purpose of the requirement. NHTSA granted a petition for a similar noncompliance by Bridgestone/Firestone North American Tire, LLC in 2004 (69 FR 75106, December 15, 2004). Hankook has corrected the problem.

In consideration of the foregoing, NHTSA has decided that the petitioner has met its burden of persuasion that the noncompliance described is inconsequential to motor vehicle safety. Accordingly, Hankook's petition is granted and the petitioner is exempted from the obligation of providing notification of, and a remedy for, the noncompliance.

Authority: 49 U.S.C. 30118, 30120; delegations of authority at CFR 1.50 and 501.8.

Issued on: April 20, 2005.

Ronald L. Medford,

Senior Associate Administrator for Vehicle Safety.

[FR Doc. 05–8265 Filed 4–25–05; 8:45 am]

BILLING CODE 4910–59–P

DEPARTMENT OF THE TREASURY

Public Meeting of the President's Advisory Panel on Federal Tax Reform

AGENCY: Department of the Treasury.

ACTION: Notice of meeting.

SUMMARY: This notice advises all interested persons of a public meeting of the President's Advisory Panel on Federal Tax Reform.

DATES: The meeting will be held on Wednesday, May 11 and Thursday, May 12, 2005, in the Washington, DC area and will begin at 9:30 a.m. on both days.

ADDRESSES: The venue has not been identified to date. Venue information will be posted on the Panel's Web site at *http://www.taxreformpanel.gov* as soon as it is available.

FOR FURTHER INFORMATION CONTACT: The Panel staff at (202) 927–2TAX (927–2829) (not a toll-free call) or e-mail *info@taxreformpanel.gov* (please do not send comments to this box). Additional information is available at *http://www.taxreformpanel.gov.*

SUPPLEMENTARY INFORMATION: *Purpose:* The May 11–12 meeting is the eighth meeting of the Advisory Panel. At this meeting, the Panel will consider specific proposals for reform of the tax code.

Comments: Interested parties are invited to attend the meeting; however, no public comments will be heard at the meeting. Any written comments with respect to this meeting may be mailed to The President's Advisory Panel on Federal Tax Reform, 1440 New York Avenue, NW., Suite 2100, Washington, DC 20220. All written comments will be made available to the public.

Records: Records are being kept of Advisory Panel proceedings and will be available at the Internal Revenue Service's FOIA Reading Room at 1111 Constitution Avenue, NW., Room 1621, Washington, DC 20024. The Reading Room is open to the public from 9 a.m. to 4 p.m., Monday through Friday except holidays. The public entrance to the reading room is on Pennsylvania Avenue between 10th and 12th Streets. The phone number is (202) 622–5164 (not a toll-free number). Advisory Panel documents, including meeting announcements, agendas, and minutes, will also be available on *http://www.taxreformpanel.gov.*

Dated: April 22, 2005.

Mark S. Kaizen,

Designated Federal Officer.

[FR Doc. 05–8389 Filed 4–25–05; 8:45 am]

BILLING CODE 4810–25–P

DEPARTMENT OF THE TREASURY

Office of Thrift Supervision

Proposed Agency Information Collection Activities; Comment Request—Thrift Financial Report: Schedule VA

AGENCY: Office of Thrift Supervision (OTS), Treasury.

ACTION: Notice and request for comment.

SUMMARY: The Department of the Treasury, as part of its continuing effort to reduce paperwork and respondent burden, invites the general public and other Federal agencies to comment on proposed and continuing information collections, as required by the Paperwork Reduction Act of 1995, 44 U.S.C. 3507. The Office of Thrift Supervision within the Department of the Treasury will submit the proposed information collection requirement described below to the Office of Management and Budget (OMB) for review, as required by the Paperwork Reduction Act. Today, OTS is soliciting public comments on proposed changes to the Thrift Financial Report (TFR), Schedule VA—Consolidated Valuation Allowances and Related Data, effective with the September 30, 2005, report.

At the end of the comment period, the comments and recommendations received will be analyzed to determine the extent to which OTS should modify the proposed revisions prior to giving its final approval. OTS will then submit the revisions to OMB for review and approval.

DATES: Submit written comments on or before June 27, 2005.

ADDRESSES: Send comments to Information Collection Comments, Chief Counsel's Office, Office of Thrift Supervision, 1700 G Street, NW., Washington, DC 20552; send facsimile transmissions to FAX number (202) 906–6518; send e-mails to *infocollection.comments@ots.treas.gov;* or hand deliver comments to the Guard's Desk, east lobby entrance, 1700 G Street, NW., on business days between 9 a.m. and 4 p.m. All comments should refer to ''Revisions to TFR Schedule VA, OMB No. 1550–0023.'' OTS will post comments and the related index on the OTS Internet Site at *http://www.ots.treas.gov.* In addition, interested persons may inspect comments at the Public Reading Room, 1700 G Street, NW., by appointment. To make an appointment, call (202) 906–5922, send an e-mail to *publicinfo@ots.treas.gov,* or send a facsimile transmission to (202) 906–7755.

FOR FURTHER INFORMATION CONTACT: You can access sample copies of the proposed September 2005 TFR form on OTS's Web site at *http://www.ots.treas.gov* or you may request them by electronic mail from *tfr.instructions@ots.treas.gov.* You can request additional information about this proposed information collection from James Caton, Director, Financial Monitoring and Analysis Division, (202) 906–5680, Office of Thrift Supervision, 1700 G Street, NW., Washington, DC 20552.

SUPPLEMENTARY INFORMATION: The effect of the proposed revisions to the reporting requirements of these information collections will vary from institution to institution, depending on the extent to which an institution acquired loans with evidence of deterioration or credit quality since origination, including acquisitions of such loans in business combinations accounted for using the purchase method. OTS expects that the proposed revisions will generally apply only to the limited number of institutions that are involved in purchase business combinations or that engage as a business activity in purchases of loans with credit quality deterioration since origination. Furthermore, the proposed revisions entail the reporting of information included in disclosures required under applicable generally accepted accounting principles. Therefore, OTS estimates that the implementation of these reporting revisions will result in a nominal increase in the current reporting burden imposed on all savings associations by the TFR.

Abstract

Those OTS-regulated savings associations affected by the proposed revisions must comply with the information collections described in this notice. OTS collects this information each calendar quarter, or less frequently if so stated. OTS needs this information to monitor the condition, performance, and risk profile of the savings association industry.

Current Action

These revisions are proposed in response to Statement of Position 03–3, Accounting for Certain Loans or Debt Securities Acquired in a Transfer (SOP 03–3), which was issued by the American Institute of Certified Public Accountants (AICPA) and is effective for loans acquired in fiscal years beginning after December 15, 2004. OTS is proposing to add three items to the TFR relating to loans within the scope of SOP 03–3. In addition, OTS is revising the TFR instructions to explain how the delinquency status of loans within the scope of SOP 03–3 should be determined for purposes of disclosing past due loans in the TFR.

OTS intends to implement the proposed TFR changes as of the September 30, 2005, report date. Nonetheless, as is customary for TFR changes, if the information required to be reported in accordance with the proposed reporting revisions is not readily available, institutions are advised that they may report reasonable estimates of this information for the report date as of which the proposed changes first take effect.

In December 2003, the AICPA issued SOP 03–3. In general, this Statement of Position applies to ''purchased impaired loans,'' *i.e.*, loans that a savings association has purchased, including those acquired in a purchase business combination, when there is evidence of deterioration of credit quality since the origination of the loan and it is probable, at the purchase date, that the savings association will be unable to collect all contractually required payments receivable. The Statement of Position applies to loans acquired in fiscal years beginning after December 15, 2004, with early adoption permitted. Savings associations must follow SOP 03–3 for TFR purposes in accordance with its effective date based on their fiscal years. The Statement of Position does not apply to the loans that a savings association has originated. SOP 03–3 also excludes certain acquired loans from its scope.

Under SOP 03–3, a purchased impaired loan is initially recorded at its purchase price (in a purchase business combination, the present value of amounts to be received). The Statement of Position limits the yield that may be accreted on the loan (the accretable yield) to the excess of the savings association's estimate of the undiscounted principal, interest, and other cash flows expected at acquisition to be collected on the loan over the savings association's initial investment in the loan. The excess of contractually required cash flows over the cash flows expected to be collected on the loan, which is referred to as the nonaccretable difference, must not be recognized as an adjustment of yield, loss accrual, or valuation allowance. Neither the accretable yield nor the nonaccretable difference may be shown on the balance sheet. After acquisition, increases in the cash flows expected to be collected generally should be recognized prospectively as an adjustment of the loan's yield over its remaining life.

Decreases in cash flows expected to be collected should be recognized as an impairment.

The Statement of Position prohibits a savings association from ''carrying over'' or creating valuation allowances (loan loss allowances) in the initial accounting for purchased impaired loans. This prohibition applies to the purchase of an individual impaired loan, a pool or group of impaired loans, and impaired loans acquired in a purchase business combination. As a consequence, SOP 03–3 provides that valuation allowances should reflect only those losses incurred after acquisition, that is, the present value of all cash flows expected at acquisition that ultimately are not to be received. Thus, because of the accounting model set forth in SOP 03–3, savings associations will need to segregate their purchased impaired loans, if any, from the remainder of their loan portfolio for purposes of determining their overall allowance for loan and lease losses.

According to the Basis for Conclusions of SOP 03–3, the AICPA's Accounting Standards Executive Committee ''believes that the accounting for acquired loans within the scope of this SOP is sufficiently different from the accounting for originated loans, particularly with respect to provisions for impairment * * * such that the amount of loans accounted for in accordance with this SOP should be disclosed separately in the notes to financial statements.'' OTS agrees with this assessment and has considered the disclosures required by SOP 03–3. Therefore, to assist OTS in understanding the relationship between the allowances for loan and lease losses and the carrying amount of the loan portfolios of those savings associations whose portfolios include purchased impaired loans, OTS is proposing to add three items to the TFR. All three of these items represent information included in the disclosures required by SOP 03–3. OTS would add three Memorandum items to Schedule VA—Consolidated Valuation Allowances and Related Data: (1) The outstanding balance of the purchased impaired loans held for investment, (2) the carrying amount as of the report date of the purchased impaired loans held for investment,[1] and (3) the amount of loan loss allowances for purchased impaired loans held for investment that is included in the total amount of the allowance for loan and lease losses as of the report date.

OTS also plans to revise the instructions to Schedule VA—Consolidated Valuation Allowances and Related Data, to explain how purchased impaired loans should be reported in this schedule. SOP 03–3 does not prohibit placing loans on nonaccrual status and any nonaccrual purchased impaired loans should be reported accordingly in Schedule PD—Consolidated Past Due and Nonaccrual. For those purchased impaired loans that are not on nonaccrual status, savings associations should determine their delinquency status in accordance with the contractual repayment terms of the loans without regard to the purchase price of (initial investment in) these loans or the amount and timing of the cash flows expected at acquisition.

Request for Comments

OTS may not conduct or sponsor an information collection, and respondents are not required to respond to an information collection, unless the information collection displays a currently valid OMB control number.

In this notice, OTS is soliciting comments concerning the following information collection.

Report Title: Thrift Financial Report.

OMB Number: 1550–0023.

Form Number: OTS 1313.

Statutory Requirement: 12 U.S.C. 1464(v) imposes reporting requirements for savings associations.

Type of Review: Revision of currently approved collections.

Affected Public: Savings Associations.

Estimated Number of Respondents and Recordkeepers: 880.

Estimated Burden Hours per Respondent: 36.4 hours average for quarterly schedules.

Estimated Frequency of Response: Quarterly.

Estimated Total Annual Burden: 128,128 hours.

As part of the approval process, we invite comments addressing one or more of the following points:

a. Whether the proposed revisions to the TFR collection of information are necessary for the proper performance of the agency's functions, including whether the information has practical utility;

b. The accuracy of the agency's estimate of the burden of the collection of information;

c. Ways to enhance the quality, utility, and clarity of the information to be collected;

d. Ways to minimize the burden of information collections on respondents, including through the use of automated collection techniques, the Internet, or other forms of information technology; and

e. Estimates of capital or start up costs and costs of operation, maintenance, and purchase of services to provide information.

OTS will summarize the comments that we receive and include them in the request for OMB approval. All comments will become a matter of public record.

Clearance Officer: Marilyn K. Burton, (202) 906–6467, Office of Thrift Supervision, 1700 G Street, NW., Washington, DC 20552.

OMB Reviewer: Mark D. Menchik, (202) 395–3176, Office of Management and Budget, Room 10236, New Executive Office Building, Washington, DC 20503.

Dated: April 20, 2005.

By the Office of Thrift Supervision.

James E. Gilleran,

Director.

[FR Doc. 05–8281 Filed 4–25–05; 8:45 am]

BILLING CODE 6720–01–P

[1] Loans held for investment are those loans that the savings association has the intent and ability to hold for the foreseeable future or until maturity or payoff. Thus, the outstanding balance and carrying amount of any purchased impaired loans that are held for sale would not be reported in these proposed Memorandum items.

Corrections

Federal Register
Vol. 70, No. 79
Tuesday, April 26, 2005

This section of the FEDERAL REGISTER contains editorial corrections of previously published Presidential, Rule, Proposed Rule, and Notice documents. These corrections are prepared by the Office of the Federal Register. Agency prepared corrections are issued as signed documents and appear in the appropriate document categories elsewhere in the issue.

ENVIRONMENTAL PROTECTION AGENCY

40 CFR Part 52

[GU122–NBK; FRL–7888–4]

Revisions to the Territory of Guam State Implementation Plan, Update to Materials Incorporated by Reference

Correction

In rule document 05–7806 beginning on page 20473 in the issue of Wednesday, April 20, 2005, make the following correction:

On page 20476, the table is corrected in part to read as follows:

TABLE 52.2670.—EPA APPROVED TERRITORY OF GUAM REGULATIONS

State citation	Title/subject	Effective date	EPA approval date	Explanation
* * * * * * *				
Chapter 13.1	Control of Sulfur Dioxide Emissions	08/24/1979	05/12/1981 46 FR 26303.	For All Sources except Tanguisson Power Plant.
Chapter 13.1	Addendum to 13.1	01/28/1980	05/12/1981 46 FR 26303.	Compliance Order for Inductance.
* * * * * * *				

[FR Doc. C5–7806 Filed 4–25–05; 8:45 am]

BILLING CODE 1505–01–D

Federal Register

Tuesday,
April 26, 2005

Part II

Department of Housing and Urban Development

24 CFR Parts 3280 and 3285
Model Manufactured Home Installation Standards; Proposed Rule

DEPARTMENT OF HOUSING AND URBAN DEVELOPMENT

24 CFR Parts 3280 and 3285

[Docket No. FR–4928–P–01; HUD–2005–0006]

RIN 2502–AI25

Model Manufactured Home Installation Standards

AGENCY: Office of the Assistant Secretary for Housing—Federal Housing Commissioner, HUD.

ACTION: Proposed rule.

SUMMARY: This proposed rule would establish new Model Manufactured Home Installation Standards (Model Installation Standards) for the installation of new manufactured homes and would include standards for the completion of certain aspects necessary to join all sections of multi-section homes. The National Manufactured Housing Construction and Safety Standards Act of 1974 requires the Secretary to develop and establish Model Installation Standards after receiving proposed installation standards from the Manufactured Housing Consensus Committee (MHCC). HUD received and reviewed the MHCC's recommended model installation standards and is in agreement with a significant majority of the recommendations. Following discussion with the MHCC at its August 2004 meeting, HUD provided the MHCC with a draft of this proposed rule establishing the Model Installation Standards. During three ensuing conference calls with the MHCC and its subcommittee on installation, HUD received additional feedback and comment from the MHCC and its members that were considered for inclusion in this proposed rule.

Within this proposed rule, HUD is providing its proposed Model Installation Standards, and a detailed summary of its recommended changes to the MHCC's proposal. The proposed rule also incorporates certain amendments to definitions contained in the Manufactured Home Construction and Safety Standards (MHCSS) that are affected by definitions provided in the Model Installation Standards. HUD is specifically requesting comment on proposed installation standards applicable to completing work and conducting adequate inspections necessary to join all sections of a multi-section manufactured home, as well as many other areas of manufactured home installation that may need consideration before final publication.

DATES: *Comments Due Date:* June 27, 2005.

ADDRESSES: Interested persons are invited to submit comments regarding this rule to the Regulations Division, Office of General Counsel, Room 10276, Department of Housing and Urban Development, 451 Seventh Street, SW., Washington, DC 20410–0500. Interested persons may also submit comments electronically through either:

- The Federal eRulemaking Portal at: *http://www.regulations.gov*; or
- The HUD electronic Web site at: *http://www.epa.gov/feddocket*. Follow the link entitled ''View Open HUD Dockets.''

Commenters should follow the instructions provided on that site to submit comments electronically. Facsimile (FAX) comments are not acceptable. In all cases, communications must refer to the docket number and title. All comments and communications submitted will be available, without revision, for public inspection and copying between 8 a.m. and 5 p.m. weekdays at the above address. Copies are also available for inspection and downloading at *http://www.epa.gov/feddocket*.

FOR FURTHER INFORMATION CONTACT: William W. Matchneer III, Administrator, Office of Manufactured Housing Programs, Room 9164, Department of Housing and Urban Development, 451 Seventh Street, SW., Washington, DC 20410; telephone (202) 708–6401 (this is not a toll free number). Persons with hearing or speech impairments may access this number via TTY by calling the toll free Federal Information Relay Service at 1–800–877–8389.

SUPPLEMENTARY INFORMATION:

I. Background

On December 27, 2000, the National Manufactured Housing Construction and Safety Standards Act of 1974 (42 U.S.C. 5401–5426) (the Act) was amended by the Manufactured Housing Improvement Act of 2000, which, among other things, provided for the creation of the Manufactured Housing Consensus Committee (MHCC) and established new requirements pertaining to the installation of new manufactured homes. One of the provisions of the Act requires the Secretary to establish Model Installation Standards for new manufactured homes. The Act also gave the MHCC responsibility to develop and submit proposed model manufactured home installation standards. The MHCC recommendations were to be submitted to HUD not later than 18 months after the initial appointment of all committee members. The MHCC held its first meeting in August 2002 and began work on its installation standards recommendations by reviewing the already developed consensus standard National Fire Protection Agency (NFPA) 225, with draft updates maintained by the National Fire Protection Association (NFPA) through September 2002. Subsequently, the MHCC approved proposed installation standards and submitted them to HUD on December 18, 2003. HUD reviewed the recommendations and developed a draft proposed rule that was based upon those recommendations. Following its review of the draft proposed rule, the MHCC provided additional recommendations to HUD on September 3, 2004.

The complete MHCC recommendations relating to model manufactured home installation standards, including the transmittal letter to HUD and the MHCC's description of its installation standards development assumptions and principles, can be found on the Web site maintained by the NFPA, the administering organization for the MHCC, at *http://www.nfpa.org/PDF/MHCC FinalChangesInstallStd.pdf?src=nfpa*.

At the MHCC's meeting on August 10, 2004, HUD presented orally and in writing an overview of its initial response to the MHCC's recommendations. The most significant change to the MHCC proposal related to the removal of several MHCC-suggested installation standards for on-site completion of multi-section homes, which HUD deemed to be related to construction and assembly of the home rather than installation. Upon evaluating further comments received from the MHCC, and based upon its own review, HUD incorporated a majority of the applicable ''close up'' standards proposed by the MHCC in this proposed rule. HUD provided the MHCC with a draft of this proposed rule for review and comment on August 19, 2004. During three ensuing conference calls with the MHCC and its subcommittee on installation, HUD received additional feedback and comment from the MHCC and its members that HUD considered in preparing this proposed rule. In addition, HUD has added several questions to the preamble seeking comment on issues where consensus within the MHCC was not reached or regarding other issues on which HUD would like targeted feedback.

As indicated, HUD has carefully reviewed the MHCC's recommended

model installation standards and is in agreement with a significant majority of them. For the reasons set forth below in the Summary of Changes to the MHCC Proposed Installation Standards, modifications were made to some of the recommendations. The summaries of HUD's proposed Model Installation Standards and changes to the MHCC's recommendations include questions on which HUD seeks comment. The following is a section-by-section discussion of the new Model Installation Standards proposed by HUD.

I. Summary of HUD's Model Manufactured Home Installation Standards

HUD proposes to codify the Model Installation Standards in a new part 3285 of title 24 of the Code of Federal Regulations (CFR). HUD has chosen not to codify these installation standards as part of the Construction and Safety Standards (24 CFR part 3280), to avoid confusion between construction and installation and to assist in assigning clear lines of responsibility among the parties involved for construction versus installation issues. Moreover, the Act makes a clear distinction between the Federal Manufactured Home Construction and Safety Standards (MHCSS) and the Model Installation Standards. Section 604 of the Act (42 U.S.C. 5403) sets forth specific provisions, including preemption, which are applicable only to the MHCSS. The Act sets forth provisions applicable only to manufactured home installation and the Model Installation Standards in section 605 (42 U.S.C. 5404).

The proposed rule provides that, at a minimum, manufactured home manufacturers must include installation instructions with each new home. The instructions must be approved by a design approval primary inspection agency (DAPIA) and must provide protection to the residents of manufactured homes that equals or exceeds the protections provided by the Model Installation Standards. In addition, States that desire to operate an installation program must adopt installation standards that provide protection that equals or exceeds the protections provided by the Model Installation Standards.

HUD is soliciting comments on the distinction between standards for the construction and assembly of manufactured homes and the standards for the installation of manufactured homes established by this proposed rule. Generally, HUD has in the past considered those activities that are completed at the installation site to bring the home into conformance with the MHCSS as being part of construction and covered by the manufacturer's certification label. HUD has also considered as being part of construction those activities that for a multi-wide home are completed at the installation site, but for a singlewide home are performed in the factory prior to labeling the home, as well as activities required to finish the home at the installation site that are presently covered by the Alternative Construction process. On the other hand, HUD has considered installation to include the siting, supporting, stabilizing, and anchoring of the home.

Based on HUD's further review and consideration of the recommendations of the MHCC, HUD has included specified activities necessary for the close up and joining of all sections of a multi-section manufactured home as part of the Model Installation Standards. Installers, not manufacturers, typically perform close up work. Under the proposed rule, home purchasers generally would have to look to installers or retailers, who often employ or contract with installers to perform home installations, to remedy close up problems that are not the result of inadequate or incorrect manufacturer instructions or are manufactured in such a way that the sections do not fit together properly. This is because close up activities would not be covered by the manufacturer's notification and correction responsibilities for construction defects standards under section 615 of the Act (42 U.S.C. 5414). However, including close up provisions in the Model Installation Standards would also mean that, in accordance with the Act, a State that operates an installation program in lieu of the HUD program will have to provide for inspections that include close up work.

Under the current enforcement of the MHCSS, as well as State and local enforcement of installations, inspection for close up activities is generally not conducted by primary inspection agencies, States, local authorities, or HUD. HUD and the MHCC are of the opinion that improper close up is an area of significant concern for manufactured housing, and believe that the Model Installation Standards provide an opportunity to better address both close up and installation. Therefore, the proposed rule would include close up activities in the Model Installation Standards. Thus, close up work completed on site would be inspected under regulations to establish an installation program that will be published by HUD for public comment in a separate rulemaking. While HUD recognizes that there may be reasons to include close up activities as part of the MHCSS, the MHCC and HUD believe there is a practical necessity to include these aspects as installation standards, which would be inspected by States or HUD under installation program requirements. HUD believes that the Model Installation Standards as proposed, the additional requirement for inspection of installation and close up work through HUD's future installation program rule, and HUD's forthcoming dispute resolution regulation (which will also be published separately for public comment in a future rulemaking and would involve consumers, manufacturers, retailers, and installers) will provide greater protections to the residents of manufactured homes.

HUD would like to receive comments, in particular from installers, retailers, and manufactured home owners, on the legal and practical effect of these proposals. Since close-up consists of the work and activities for completing the assembly of the home, is it consistent with the rest of the Act to consider such work as construction and therefore the responsibility of the manufacturer? Or is it too difficult for manufacturers to control and monitor the close-up done by installers so that it would be more appropriate to classify close up as part of installation? Will consumers be adequately protected if close-up is classified as part of installation?

HUD would also very much appreciate receiving comments from the States and local governments on this subject. How do the States and municipalities presently treat close up activities? Do their inspectors review close up activities as part of installation inspections? If there were requirements for inspection of close up work as part of HUD's certification of a State installation program, would there be difficulties with the expertise or work load of the State or local inspectors with respect to close ups, such that State installation laws could not be certified as covering inspection of close up work? Finally, HUD is very interested in hearing from States concerning whether the Model Installation Standards proposed in this rule would work well with the present installation programs in the States.

Summary—Part 3285 Model Manufactured Home Installation Standards

Subpart A—General

Subpart A of the new part 3285 would include general provisions relevant to

the overall use and applicability of the Model Installation Standards. These general provisions include statements of the scope (§ 3285.1(a)) and applicability (§ 3285.1(b)). The Model Installation Standards are applicable to the installation of new manufactured homes and would include those specific aspects of a typical installation that would be necessary to join all sections of a multi-section home. As a result, these close-up and crossover aspects would not be considered assembly under the Act's definition of ''manufactured home construction.'' This means that installers, rather than manufacturers, would be responsible for the great majority of problems relating to those aspects of erecting a home.

States that choose to operate an installation program, as will be addressed by HUD under separate provisions set forth in a subsequent proposed rule, must implement installation standards that provide protection that equals or exceeds the protection to the residents of manufactured homes provided by these Model Installation Standards. Qualifying States may choose to establish or permit more stringent installation standards. However, States that do not establish standards that provide a level of protection that meets or exceeds the level of protection of these model provisions will not have qualifying programs.

In States that do not choose to operate an installation program, HUD intends to regulate and enforce the installation of new manufactured homes through a program to be established separately in a subsequent rulemaking, using these Model Installation Standards for minimum design and installation requirements. In these States, the State or municipalities also may establish more stringent requirements, so long as the requirements provide protection that equals or exceeds the protection provided by the Model Installation Standards.

Under the proposed rule, manufacturers would be required to provide installation instructions (§ 3285.2) with each new home that would be approved by the DAPIAs as providing the residents protection that equals or exceeds the protection provided by the Model Installation Standards. The manufacturer's installation instructions must not take the home out of compliance with the MHCSS (24 CFR part 3280), and must provide adequate instructions to complete those limited aspects of the installation that are necessary to join all sections of a multi-section home. HUD intends home manufacturers to be responsible for adequate and conforming installation instructions. However, through enforcement and dispute resolution regulations yet to be published for comment, installers or retailers would be accountable and responsible for work completed at the installation site in accordance with the manufacturers' instructions.

HUD is also providing, in subpart A, general requirements for alterations completed during the initial installation that affect the installation of the home (§ 3285.3). This section ensures that any alterations will not adversely affect compliance with the Model Installation Standards, and that any such alteration does not take the home out of compliance with the MHCSS. The provision prohibits alterations, as defined by 24 CFR 3282.7, from imposing additional loads to the manufactured home or its foundation without following a design by a registered engineer or registered architect, or express inclusion in the manufacturer's approved installation instructions.

Consistent with other construction-type standards, HUD would incorporate several specifications, standards and codes by reference (§ 3285.4) pursuant to 5 U.S.C. 552(a) and 1 CFR part 51. Reference standards have the same force and effect as the other Model Installation Standards except that whenever reference standards and the Model Installation Standards are inconsistent, the requirements of the Model Installation Standards would prevail to the extent of the inconsistency. Section 3285.5 provides definitions for terms contained in the Model Installation Standards.

Subpart B—Pre-Installation Considerations

The majority of Subpart B would contain provisions for the installation of new manufactured homes in flood hazard areas. Consistent with current practice, the Model Installation Standards would make the installer responsible to evaluate the prospective installation site to determine if the location is in a flood hazard area (§ 3285.101). If so located, the installer must refer to the Federal Emergency Management Agency's National Flood Insurance Program for specific requirements and further guidance relating to installation in flood hazard areas.

Seismic safety has not been addressed in this proposed rule primarily because seismic safety is not a required consideration in the construction of manufactured homes under the preemptive Manufactured Home Construction and Safety Standards (24 CFR part 3280). However, in areas where seismic activity is a concern, some State and local jurisdictions currently implement and enforce installation provisions that address seismic safety. Because the Model Installation Standards are minimum standards, these jurisdictions will continue to have full authority to implement and enforce seismic safety considerations. Should the Model Installation Standards attempt to set forth minimum installation requirements or pre-installation considerations to address seismic safety? If so, how should HUD establish seismic zones and what minimum requirements would be included in the Model Installation Standards?

The Model Installation Standards would incorporate by reference the design zone maps (§ 3285.102) provided in the MHCSS (24 CFR part 3280) to ensure that the design and construction of the home's foundation and anchorage is compatible with the design and construction of the manufactured home.

In addition, the proposed Model Installation Standards recognize the need to evaluate other practical considerations for the installation site (§ 3285.103) and obtain all permits necessary for installation work, alterations, or other site-built structures (§ 3285.104). While HUD would not regulate these considerations, reference to subpart J of this proposed rule is provided to establish considerations for which a home manufacturer must provide caution to the installer.

Subpart C—Site Preparation

Subpart C is to establish requirements for the preparation of the site where a manufactured home would be installed and requires assessment of the soil at the installation site to ensure proper design and construction of the home's foundation and anchorage.

The Model Installation Standards would also provide for site evaluation of the soil (§ 3285.201) and determination of soil classification and bearing capacity (§ 3285.202) to ensure that a particular foundation and anchorage design would be adequate for the home design and location. The Model Installation Standards provide for three general methods of determining the bearing capacity and classification of the soil at the installation site. Soils may be tested to determine the appropriate soil classification, bearing capacity, and torque probe values, or the records on file with a local authority having jurisdiction (LAHJ) may be used to determine these soil characteristics. Alternately, if the soil can be identified

by type, a table is provided for use in determining appropriate bearing capacity and soil classification including corresponding torque probe values. The Model Installation Standards would require consultation with a registered professional if unusual or suspect soil conditions were present.

The proposed Model Installation Standards also include provisions to ensure that surface water is adequately drained to prevent water build-up under the home (§ 3285.203). The Model Installation Standards would require a minimum one-half inch per foot slope away from the home for the first ten feet, and require the home to be protected from surface runoff. If the slope cannot be obtained for ten feet due to property lines or other physical conditions, the site would need to be provided with drainage that will carry surface runoff away from the foundation. The standard would also require other runoff from gutters and downspouts to be directed away from the home.

If the space under the home is enclosed with skirting or otherwise similarly enclosed, the Model Installation Standards would require a vapor retarder to keep ground moisture from entering the home (§ 3285.204). Arid regions with dry soil conditions, as well as areas under open decks, porches, or recessed entries would be exempt from vapor barrier requirements. The Model Installation Standards would also provide for minimum vapor barrier material requirements and proper installation techniques. The requirements for vapor barrier installation permit minor voids and tears without repair. However, HUD is concerned that the excessive voids and numerous tears can defeat the purpose of the requirement. Therefore, should limitations be placed on the number and size of voids and tears? If so, what specific limitations would be recommended?

Subpart D—Foundations

The Model Installation Standards would require foundations for manufactured home installations to be based on site conditions, home design features, and the loads the home was designed to withstand as evidenced on the home's data plate (§ 3285.301). The Model Installation Standards would provide prescriptive methods for constructing a foundation composed of piers and footings traditionally addressed by the manufacturer's installation instructions. While the Model Installation Standards include tables to size piers and footings, home manufacturers may elect to provide installation instructions that are compatible with the homes and options designed and constructed in their factories. However, the manufacturer's instructions must provide protection to residents that equals or exceeds the protection provided through the tables as based on assumptions outlined in table footnotes, and the design loads for which the home was constructed. When a home's design configuration differs from the design limitations noted in table footnotes, manufacturers or design professionals must use the design loads for which the home was constructed (based on the MHCSS) to design adequate support and anchorage. Equivalent pier and footing instructions, consistent with the presentation of data in the Model Installation Standards, would require substantiation through engineering design and analysis (§ 3285.301(b) and (c)).

HUD Questions: Is it clear in the proposed rule that the described tables and charts for piers, footings, and anchor spacing are meant to provide example requirements for homes that have characteristics consistent with the respective design assumption footnotes? Is it clear that variations to tables and charts may be achieved through other installation methods or specifications and that the inclusion of variations within the manufacturer's installation instructions is both acceptable and may be required in order to assure continued compliance of the home with the MHCSS? Do the Model Installation Standards provide an adequate basis for preparing manufacturer's instructions that meet the level of protection provided by the Model Installation Standards when other installation methods are used? Do the Model Installation Standards need to include clearer performance equivalents so that alternative installation methods may be developed and subsequently approved or certified by Design Approval Primary Inspection Agencies (DAPIAs) or registered engineers or architects, as applicable? Can manufacturers comply consistently with both the MHCSS and the Model Installation Standards as proposed? Since the Model Installation Standards are intended to provide requirements for manufacturers to develop installation instructions, should the prescriptive provisions found in the tables for pier and footing sizing and anchor spacing be more appropriately placed in an appendix? Should the different specifications included in approved manufacturer installation instructions be required to be formatted to present pier, footer, and anchor spacing consistent with the presentation of data in the tables and charts of the Model Installation Standards?

The Model Installation Standards would also permit alternative foundation design (§ 3285.301(d)). The alternative foundation design and support requirements would be determined by a registered professional engineer, registered architect, or nationally recognized third party testing agency in accordance with a nationally recognized testing protocol and must safely support the home as required by § 3285.301. However, HUD is not aware of an existing nationally recognized testing protocol or standard established to determine the support capability of proprietary-type foundation systems. While the proposed Model Installation Standards do refer to a national test protocol, HUD is requesting comments on specific requirements that should be considered and contained in such a protocol.

As determined from flood hazard evaluation required in Subpart B, if the home is located wholly or partly in a flood hazard area, the support system would need to be capable of resisting gravity loads as well as design flood and wind loads (§ 3285.302).

Generally, the Model Installation Standards would require piers to be capable of transmitting the vertical live and dead loads to the footings or foundation below (§ 3285.303). Piers may be made of concrete blocks, pressure-treated wood, or adjustable metal or concrete piers. Piers, if manufactured, would be required to be listed (§ 3285.5) according to the intended use.

The load that each pier must carry depends on many variables. Such variables include the dimensions of the home, the design dead and live loads, the spacing of the piers, and the way the piers are used to support the home. Manufacturers' installation instructions would be required to have pier and footing requirements that provide protection to manufactured home residents that equals or exceeds the protection provided by the design support configurations indicated in several tables provided in (§ 3285.303(d)), based on certain design assumptions noted in footnotes.

The tables were prepared based upon worst-case design assumptions for current typical construction. However, the intended applicability of the tables is outlined and limited by the footnotes to the tables. It is HUD's intent that manufacturers or other parties may engineer and develop other pier and footing sizes and spacings for homes with characteristics that are outside of the design assumptions of the tables,

provided that the engineered design provides protection to residents that equals or exceeds the protection provided by the specific design assumptions and specifications of the tables.

Table 3285.303(d)(1)(i) provides the model pier load and footing requirements for manufactured homes that are designed to be supported only at the frame and without additional perimeter support, except for perimeter support required at openings. Table 3285.303(d)(1)(ii) provides the model pier load and footing requirements for manufactured homes that are designed for support both at the frame and at the perimeter with support at specified spacings. Table 3285.303(d)(1)(iii) provides the minimum pier load and footing requirements for ridge beam column supports applicable to the mate-line of multi-section homes. For opening spans between those specifically included in the table, pier loads interpolated for the specific span may be used to design piers and footings.

The Model Installation Standards (§ 3285.304) would also provide for specific materials, dimensions, and illustrations that establish the model design and construction requirements for concrete block piers and pier caps. Pier caps would be designed for structural loads to evenly distribute the loads across hollow block piers.

HUD recognizes that gaps occur between the bottom of the supported beam and the foundation support system during typical installations. The Model Installation Standards would provide material and thickness requirements acceptable to fill these gaps. The Model Installation Standards would also provide requirements (§ 3285.305) for maintaining minimum clearances under homes.

The Model Installation Standards would provide minimum design procedures for typical concrete block piers, single or double stacked, including limitations and requirements for pier heights and block orientation in § 3285.306. The Model Installation Standards would require design by the manufacturer or a registered professional engineer or architect for unusual or special pier conditions, such as high or elevated piers (§§ 3285.306(c) and 3285.309).

The Model Installation Standards would also address requirements for locating piers along the mate-line of multi-section homes. Figures 3285.310(a), 3285.310(b), and 3285.310(c) illustrate typical pier locations including pier and footing table references, applicable to mate-line locations and the appropriate support configuration.

The Model Installation Standards (§ 3285.311) would require pier supports on both sides of side wall exterior doors and any other side wall openings greater than 48 inches (such as entry and sliding glass doors), and under porch posts, factory installed fireplaces, and wood stoves. Additional or alternate perimeter supports would be required in accordance with the design of the home, but would require use of the appropriate pier load and footing configuration tables as determined by the home manufacturer or a registered professional engineer or architect.

The Model Installation Standards (§ 3285.312) would require footings to support every pier. Footings would have to be placed on undisturbed soil or fill compacted to 90 percent of maximum relative density. Figures 3285.312(a) and 3285.312(b) illustrate typical footing and pier (blocking) diagrams for single and multi-section homes.

Acceptable footing materials (§ 3285.312(a)) and specific listing or labeling requirements would be required and identified, as appropriate for each material. Footings placed in freezing climates (§ 3285.312(b)) would be required to be placed below the frost line depth unless a registered professional engineer or architect properly designs an insulated foundation or slab-type foundation (§ 3285.312(b)) in accordance with a nationally recognized design standard for frost-protected shallow foundations. The Model Installation Standards do not contain provisions for reinforced cast-in-place footings.

HUD Questions: When desired or required, should the Model Installation Standards provide minimum steel reinforcement specifications for cast-in-place footings? What information should the Model Installation Standards include to adequately provide for the design of such footings? Should the Model Installation Standards incorporate nationally recognized consensus standards such as the American Concrete Institute code 530, for masonry structures and specifications?

The size of footings (§ 3285.312(c)) would depend on the load-bearing capacity of both the piers and the soil bearing capacity. Table 3285.312(d) and Figure 3285.312(c) would provide footing configurations and requirements for precast and poured-in-place concrete footings corresponding to specified pier loads.

The Model Installation Standards would require support systems designed to combine both load-bearing capacity and uplift resistance to be designed and sized for all applicable design loads (§ 3285.313).

These standards would not apply to installations on site-built permanent foundations when the manufacturer certifies the home in accordance with § 3282.12. Otherwise, designs for permanent foundations (§ 3285.314) would also be permitted so long as designs are obtained from the home manufacturer, or designed by a registered professional engineer or registered architect. These designs may also be subject to more stringent or supplementary local code requirements. When permanent foundation designs are required, but not available from the home manufacturer, a registered professional engineer, or registered architect would need to prepare a permanent foundation design that satisfies the home support and anchorage requirements for the site and the loads for which the home was constructed.

Foundations for homes designed for and located in areas with roof live loads greater than 40 psf, would be required to be designed by a registered professional engineer or registered architect for the special snow load conditions (§ 3285.316). The Model Installation Standards would also recognize the use of ramadas in areas with roof live loads greater than 40 pounds per square foot (psf), but would require that any connection to the home be for weatherproofing only.

Subpart E—Anchorage Against Wind

Subpart E (§§ 3285.401 and 3285.402) would provide requirements for anchoring necessary to secure manufactured homes against wind. The Model Installation Standards would require anchorage for manufactured home installations to be based on site conditions, home design features, and the loads the home was designed to withstand as evidenced on the data plate.

Where applicable to the type of installation, the Model Installation Standards would provide requirements for determining the maximum spacing for anchoring assemblies, historically addressed by the manufacturers installation instructions. The Model Installation Standards would also permit alternative anchorage design as long as the design is verified through engineering data and designed and certified by a registered professional engineer or architect (§ 3285.401(b)), based on the same process for pier and footer sizing.

The Model Installation Standards (§ 3285.402(a)) would contain provisions for tie-down straps and anchor assemblies including ground anchors for ground anchor type installations that would be consistent with requirements in the MHCSS (24 CFR part 3280). The resistance capability of anchor assemblies and anchoring equipment would be determined by a registered professional engineer, registered architect, or nationally recognized third party testing agency in accordance with a nationally recognized testing protocol. The anchor assemblies would be required to be installed in accordance with the listing and capacity of the anchor assembly. However, HUD is not aware of an existing nationally recognized testing protocol or standard established to determine the resistance capability of anchor assemblies and anchoring equipment to wind forces. While the proposed Model Installation Standards refer to a national test protocol as recommended by the MHCC, HUD is requesting comments on specific requirements that should be considered and contained in such a protocol. HUD notes that the development of a testing protocol for anchor assemblies is currently under review by HUD and the MHCC's installation subcommittee.

When providing instructions or requirements for ground anchor type installations, the number and location of ground anchors and anchor straps (§ 3285.402(b)) for the installation of single section and multi-section manufactured homes would be required to consistent with the Tables 3285.402(c)(1) through 3285.402(c)(3), and Figures 3285.402(b)(1) and 3285.402(b)(2). However, the tables were based on worst-case assumptions for current typical manufactured home construction and may provide conservative spacing for different design assumptions. The use of the tables would only be applicable under the limitations provided in the footnotes. It is HUD's intent that manufacturers or other parties may engineer and develop other anchor spacing for homes with characteristics that are outside of the design assumptions of the tables, provided that the engineered design provides protection to residents of manufactured homes that equals or exceeds the design load assumptions and protections provided by the tables when applied to the specific home characteristics and the design loads for which the home was constructed.

Table 3285.402(c)(1) would provide the maximum ground anchor spacing for diagonal straps applicable to homes located in Wind Zone 1. However, the spacing is dependent upon the size characteristics of the home, the I-beam spacing, and the design capacity of the anchor assembly. The table also contains the maximum height from the ground to the strap attachment for each strap spacing, ensuring that the diagonal strap angle achieves a nominal 45-degree angle. The table would only be applicable under the limitations contained in the 12 footnotes.

Table 3285.402(c)(2) would provide the maximum ground anchor spacing for diagonal straps applicable to homes located in Wind Zone 2. Consistent with the MHCSS (§ 3280.306), the Model Installation Standards would require a vertical strap at each diagonal strap in this high wind area. However, the spacing is dependent upon the size characteristics of the home, the I-beam spacing, and the design capacity of the anchor assembly. The table contains the maximum height from the ground to the strap attachment for each strap spacing, ensuring that the diagonal strap angle achieves a nominal 45-degree angle. The table would only be applicable under the limitations contained in the 13 footnotes.

Table 3285.402(c)(3) would provide the maximum ground anchor spacing for diagonal straps applicable to homes located in Wind Zone 3. Consistent with the MHCSS (§ 3280.306), the Model Installation Standards would require a vertical strap at each diagonal strap in this high wind area. However, the spacing is dependent upon the size characteristics of the home, the I-beam spacing, and the design capacity of the anchor assembly. The table contains the maximum height from the ground to the strap attachment for each strap spacing, ensuring that the diagonal strap angle achieves a nominal 45-degree angle. The table would only be applicable under the limitations contained in the 13 footnotes.

In addition to regular tie down strapping and anchoring required through the tables, HUD recognizes that manufacturers may provide other straps at the factory that must be connected to an anchoring assembly (§ 3285.403) to ensure proper anchorage of the home. Such straps include mate-line straps, shear wall straps, and over-the-roof straps. When provided by the home manufacturer, these straps must be connected to an anchor assembly.

The Model Installation Standards would provide general requirements (§ 3285.404) for the installation of ground anchors in freezing climates and would require that anchorage for homes located within 1,500 feet of a Wind Zone 2 or 3 coastline be specifically included in the home manufacturer's installation instructions. Where site or other conditions prohibit the use of the manufacturer's design, the anchorage must be designed by a registered professional engineer or registered architect (§ 3282.405) for the special wind and site or other conditions.

Subpart F—Optional Features

Subpart F would provide model requirements applicable to the installation of optional features not otherwise covered by the Model Installation Standards, but which could affect the home's compliance with the Model Installation Standards or the MHCSS. Where applicable and specific to the home and product manufacturer, optional features such as expanding rooms (§ 3285.502) and some appliances (§ 3285.503) would be permitted to be installed at the installation site provided all items are installed in accordance with the home and/or product manufacturer installation instructions as Home Installation Manual Supplements (§ 3285.501).

Optional appliances (§ 3285.503) would be required to be listed (§ 3285.5) or certified for the intended use and must be installed according to the appliance manufacturer installation instructions.

The Model Installation Standards would require heat-producing appliances to exhaust to the exterior of the home, beyond perimeter skirting if installed (§ 3285.503(c)). This Subpart would also provide minimum appliance elevation and anchoring requirements for homes installed in flood hazard areas (§ 3285.503(d)). Specifically, appliances would be required to be anchored, and appliances and air inlets elevated at or above the same elevation as the lowest elevation of the lowest floor of the home.

Clothes dryer exhaust duct systems (§ 3285.503(e)) would be required to conform with and be completed in accordance with the appliance manufacturer instructions and the MHCSS (§ 3280.708).

HUD's Model Installation Standards would contain provisions for the use of optional skirting (§ 3285.504) and corresponding crawlspace ventilation (§ 3285.505) required when a perimeter enclosure is installed. The ventilation requirements are consistent with requirements for crawlspace ventilation of other structures built to model building codes, and would require ventilation of 1 square foot of ventilation for every 150 square feet of floor area. The ventilation may be decreased to 1 square foot of ventilation for every 1,500 square feet of floor area when an acceptable vapor barrier is

installed according to requirements in Subpart C. Other minimum requirements would provide for location of vent openings and covers for vent openings.

Subpart G—Ductwork and Plumbing and Fuel Supply Systems

Subpart G would provide requirements applicable to the completion and installation of ductwork and water, drainage, and fuel supply systems. The provisions of subpart G are necessarily limited in scope and content, but are required to ensure that the manufactured home is not taken out of compliance with the MHCSS after installation is completed. The connections of the systems to utilities are located in subpart J of the proposed rule.

Work related to completion of these systems at the installation site is deemed to be installation work so long as the work is limited only to that necessary to join sections of a multi-section home. However, the home manufacturer consistent with the existing requirements of the MHCSS must design instructions for completion of this work.

Home manufacturers would be required to provide specific written instructions on the proper assembly for ship loose plumbing, duct, and fuel supply systems that are necessary to join all sections of a multi-section home (§ 3285.601). The home manufacturer must design instructions to ensure that the systems, upon completion, will conform to the requirements of the MHCSS and the Model Installation Standards.

The Model Installation Standards would require water line crossovers (§ 3285.603) for multi-section homes to be designed in accordance with provisions of the MHCSS (§ 3280.609). In addition, the Model Installation Standards would establish requirements for water supply inlet pressure consistent with the MHCSS, and establish a requirement for a mandatory shut-off valve. The Model Installation Standards would also require that water lines exposed to freezing temperatures be protected from freezing in accordance with requirements already established by the MHCSS (§ 3280.603). The water system would also need to be tested for leaks after completion at the installation site with testing requirements consistent with the MHCSS (§ 3280.612).

The Model Installation Standards would require drainage crossovers (§ 3285.604) for multi-section homes to be designed in accordance with provisions of the MHCSS (§ 3280.610). In addition, the Model Installation Standards would establish requirements for proper drainage line support and slope, also consistent with the requirements of the MHCSS (§ 3280.608). The drainage system would also need to be tested for leaks after completion at the installation site with testing requirements consistent with the MHCSS (§ 3280.612).

The Model Installation Standards would require fuel supply crossovers (§ 3285.605) for multi-section homes to be designed in accordance with provisions of the MHCSS (§ 3280.705). In addition, the Model Installation Standards would establish requirements for proper fuel supply pressure, consistent with the MHCSS and a requirement for a mandatory shut-off valve. The fuel supply system would also need to be tested for leaks after completion at the installation site with testing requirements consistent with the MHCSS (§ 3280.705).

Subpart G would also provide requirements for duct crossovers and the materials to be used in completing the crossover connections (§ 3285.606). Typical duct crossover designs are illustrated in figures and are consistent with current manufacturer installation instructions. However, other types of duct crossovers would be permitted so long as the crossover is adequately insulated and properly designed for the application.

Subpart H—Electrical Systems and Equipment

The Model Installation Standards would require instructions for completing electrical crossovers (§ 3285.701) to be designed consistent with subpart I of the MHCSS. The Model Installation Standards would also provide specific requirements for the installation of certain lights and fixtures, including chain-hung interior lights, exterior lights and ceiling suspended paddle fans.

Subpart H would also contain testing requirements for electrical continuity, operation, and electrical polarity after completion of the electrical system at the installation site. Testing requirements would include functionally testing smoke alarms after completion of the home (§ 3285.703).

There may be information currently addressed by manufacturer installation instructions that has not been evaluated by the MHCC or reviewed for inclusion in the Model Installation Standards. Such issues as multi-section frame bonding, panel box grounding, and electrical feeder requirements may need further consideration. Therefore, HUD specifically invites public comment on the substance of this Subpart H and other related issues that should or should not be addressed.

Subpart I—Exterior and Interior Close Up

Subpart I would establish Model Installation Standards applicable to work related to the joining of all sections of a multi-section home. Section 3285.801 would establish provisions for close up of the exterior of the home and would include exterior siding and roofing. Exterior products would be required to be installed in accordance with the product manufacturer's installation instructions and fastened in accordance with manufacturer designs consistent with the MHCSS (§§ 3280.305 and 3280.307). The Model Installation Standards also address completion of an air seal gasket around the mate-line of multi-section homes to prevent the infiltration of air, water, insects, and vermin. The Model Installation Standards would also contain reference to hinged roofs and eaves. Under this proposed rule, unpenetrated, low-slope hinged roofs would be covered by the requirements for installation instructions and exterior close-up work. Other, more complex hinged roofs would continue to be subject to requirements established under the MHCSS. The Department addressed those requirements in a draft rule on on-site construction that it submitted to the MHCC for its prepublication review. Should the Model Installation Standards retain the proposed distinction (§ 3285.801(f)) for certain hinged roofs that would permit completion of those roofs under the Federal installation program as part of exterior close-up? Or should all hinged roofs, regardless of roof slope, location, or penetration, be uniformly treated as construction of the roof assembly of the home and therefore subject to requirements related to the MHCSS? However, hinged roofs may be subject to Alternative Construction or other requirements to be outlined in an on-site construction rule to be published for comment separately by HUD.

The Model Installation Standards would provide requirements relating to the structural interconnection of multi-section homes (§ 3285.802). These provisions would include requirements to maintain the structural integrity of the home and would establish requirements for gaps that may occur at the mate-line upon installation.

The Model Installation Standards would also provide requirements for the interior finishing of certain aspects of the home that would not be completed at the factory due to transportation

limitations or possible transit damage (§ 3285.803). Section 3285.804 would provide for repair of bottom board material that may be disturbed during the installation process.

Subpart J—Recommendations for Manufacturer's Installation Instructions

Generally, moving manufactured homes and completing work at the site with respect to utility connections are subject to LAHJ requirements. Therefore, the proposed Model Installation Standards do not attempt to comprehensively address transport, permits, and utility connection requirements. However, several related provisions are included in subpart J as recommendations for manufacturers to include in their installation instructions in order to protect manufactured homes as constructed in accordance with the MHCSS (§ 3285.901).

Specifically, Subpart J would provide recommendations for manufacturers to provide instructions related to moving the manufactured home to the installation site (§ 3285.902), fire separation, construction of on-site structures (§ 3285.903), provisions for culverts and ditches (§ 3285.904), connection of the drainage system to the sewer system (§ 3285.905), as well as installation instructions for fuel system orifices and regulators and gas appliance startup procedures.

Subpart J would also address heating oil systems and tank installation (§ 3285.906), recommending that work be completed in accordance with the more stringent requirements of the LAHJ or the nationally recognized consensus standard NFPA 31.

II. Summary of Changes to MHCC Proposed Installation Standards

In general, HUD's Model Installation Standards incorporate the vast majority of the MHCC's proposed installation standards but would amend the MHCC proposal for consistency with format and numbering of regulations published in the Code of Federal Regulations. HUD's Model Installation Standards would also delete all references to SI (metric) units because they were not consistently and comprehensively identified within the MHCC recommendations and have not been adopted by HUD in all other standards publications.

In instances of other modification, HUD made a good-faith attempt to retain the intent and text of the installation standards provided by the MHCC. However, editorial changes have been made in the text for consistency with formatting of **Federal Register** documents, or for clarification purposes. In most areas where a change is being recommended for editorial or clarification purposes, it is not described with an associated rationale. In some instances, HUD recommends new or revised Model Installation Standards to replace the MHCC's proposed installation standards. These instances are fully described. HUD summarizes its changes to the MHCC proposal by grouping the changes into the following general categories:

- Consistency—HUD modified certain installation standards proposed by the MHCC to retain consistency with the Act, other sections of the Model Installation Standards, the MHCSS (24 CFR part 3280) and the Manufactured Home Procedural and Enforcement Regulations (24 CFR part 3282). Some changes for consistency would require a companion change to part 3280 and are identified appropriately.

- Relocate—HUD relocated certain sections or portions of text within the document while attempting to preserve the MHCC's installation standards and intent.

- Authority—HUD revised or deleted certain sections of the MHCC's proposed installation standards because the proposed installation standard was not within the scope of HUD's authority, or in the opinion of HUD, is an aspect of home installation best retained by the States for regulation through an LAHJ. In some instances, HUD retained such provisions in the Model Installation Standards but moved them from the MHCC proposed location and placed them in a section containing recommendations for inclusion in manufacturer installation instructions.

- Construction—HUD also modified certain MHCC-proposed installation standards that address completion of some aspects of the manufactured home at the site. HUD removed certain of these provisions, as they would be regulated under Alternative Construction requirements or other requirements for site completion to be published separately by HUD based upon consultation with the MHCC.

- Procedural—HUD revised or otherwise modified certain provisions because they did not establish standards but rather provided procedural direction. HUD will further consider these provisions in its future development of the Federal Installation Program regulations.

- Technical—HUD modified other provisions of the MHCC's proposed installation standards due to differences that are technical in nature.

Subpart A—General

Subpart A incorporates portions of chapters 1, 2, 3, and 4 of the MHCC's proposed installation standards. Subpart A sets forth provisions for administration, referenced publications, and definitions of terms used throughout the document. However, HUD has made certain modifications to the MHCC's proposal as outlined below.

Administration § 3285.1

Scope (Relocate, Technical)—HUD revised the scope of the Model Installation Standards from that proposed by the MHCC to emphasize certain parameters relating to the use and requirements of the document within the envisioned Federal installation program. The scope statement submitted by the MHCC provided direction on the use of manufacturer installation instructions but did not provide information relating to the use of the Model Installation Standards in the more general context of HUD's installation program which will be established by separate rulemaking. Therefore, HUD modified the scope of the document to emphasize the following:

- The Model Installation Standards, as enforced under the Federal manufactured home installation program, would be applicable only to the first or initial installation of new manufactured homes. The use of these standards for any other manufactured home installation would be subject to State or local law.

- HUD has proposed a distinction between construction and installation work for the purposes of this proposed rule. Traditionally, work necessary to join the sections of a multi-section home has not been fully enforced by HUD or State or local agencies as part of the construction and assembly process or the installation process. Through this proposed rule, HUD would continue to recognize the current practice that installers accomplish certain work, limited to the joining of sections, as installation work completed at the installation site because of the impracticality of completing the work at the factory. However, home manufacturers would be accountable and responsible to furnish with each new home, adequate instruction on the completion of these joining and crossover aspects. The installer or retailer would be accountable and responsible to complete the work in accordance with the instructions provided and/or instructions developed by registered professional engineers or

architects in instances indicated in the Model Installation Standards.

• HUD has also added language that outlines the use of the Model Installation Standards in both States that choose to operate their own installation programs as well as the intended use of the document in States that do not choose to operate an installation program.

• The MHCC's language relating to manufacturer installation instructions has been preserved and relocated with modification, at § 3285.2.

Applicability (Consistency, Technical)—HUD accepted the intent of the MHCC's proposal for applicability of the Model Installation Standards. However, HUD modified the MHCC's proposed applicability sections to simplify the requirements for convenience and clarity. In summary, the Model Installation Standards would apply only to new manufactured homes produced under the Federal Manufactured Housing Program (24 CFR part 3280 and 24 CFR part 3282). As provided by section 604(f) of the Act (42 U.S.C. 5403(f)), the installation standards do not apply to homes installed on site-built permanent foundations when the manufacturer certifies the home in accordance with § 3282.12. Exclusions and other restrictions proposed by the MHCC were not deemed necessary by HUD, and therefore have been omitted.

Installation of Manufactured Homes in Flood Hazard Areas (Relocate—§ 3285.101)—HUD accepted the MHCC's recommended provisions relating to home installation in flood hazard areas. However, HUD relocated the requirements for flood hazard areas, with minimal revisions, to Subpart B for inclusion as a pre-installation consideration.

Manufacturer Installation Instructions § 3285.2 (New Section—Technical, Consistency)—HUD accepted the intent of the MHCC in its proposed scope language and definition of manufacturers instructions. However, section 605(a) of the Act (42 U.S.C. 5404(a)) contains specific provisions for installation design and instructions. Therefore, HUD established a new section in the Model Installation Standards requiring manufacturer installation instructions be provided with each new home. Manufacturer installation instructions, as set forth in section 605(a) of the Act, must meet or exceed the protection provided under the Model Installation Standards and would need to address, at a minimum, the requirements of the Model Installation Standards.

HUD preserved a majority of the language and intent provided the MHCC in its scope statement, and supplements the language provided by the MHCC in its definition of installation instructions. HUD also modified this section to provide that the manufacturer's installation instructions must not take the home out of compliance with 24 CFR part 3280.

HUD invites comment concerning whether manufacturer installation instructions should provide that when general site conditions are not covered by the installation instructions, a professional engineer or registered architect must be consulted.

Term Use (Consistency)—HUD did not accept this MHCC proposal because the Model Installation Standards are applicable only to manufactured homes as fully described in the Applicability section (§ 3285.1(d)).

Alterations During Initial Installation § 3285.3 (New Section—Technical, Relocate)—HUD's Model Installation Standards include a section to address alterations made during the initial installation of a new manufactured home that affect the installation of the home. The Federal installation program would provide for design and inspection authority for modifications to a home or foundation only when the alteration affects the requirements of the Model Installation Standards or the MHCSS. State or local authority would have design and inspection authority for other alterations.

HUD acknowledges that there are questions in delineating State or local authority from Federal jurisdiction in instances related to alterations during initial installations, such as for patio roofs, decks, entry stairs, etc. HUD specifically invites comment as to how alterations made to manufactured homes that affect the installation or designed foundation during the initial installation should be enforced and codified.

Referenced Publications § 3285.4 (Consistency, Technical)—HUD accepted the vast majority of referenced publications provided by the MHCC. However, HUD modified the order and sequence of certain standards incorporated by reference and is adding to or did not include some standards included in the MHCC proposal as follows:

ACCA Manual J: HUD added this reference standard in Subpart F because it is a nationally recognized standard for sizing air conditioning equipment and is currently utilized and accepted by all parties for this purpose.

ASTM D1586: HUD added this nationally recognized consensus standard as a method of determining soil characteristics consistent with the current work of the MHCC's ground anchor task force.

ASTM D2487: HUD added this nationally recognized consensus standard as a method of determining soil classification consistent with the current work of the MHCC's ground anchor task force.

ASTM D2488: HUD added this nationally recognized consensus standard as a method of determining soil classification consistent with the current work of the MHCC's ground anchor task force.

NFPA 31: HUD included this reference standard because it is a nationally recognized consensus standard that addresses installation of oil burning equipment.

NFPA 255: HUD deleted this reference document because it is not referenced within the Installation Standards. Is there a specific need to include this standard as a referenced standard with the Model Installation Standards? If so, in which section would the standard be referenced?

NFPA 1192: HUD deleted this reference standard because it is not referenced within HUD's proposed modifications and is not applicable to structures covered by the Model Installation Standards. Is there a need to reference this standard for recreational vehicles? If so, in which section would the standard be referenced?

ANSI A119.5: HUD deleted this reference standard because it is not referenced within HUD's proposed modifications and is not applicable to structures covered by the Model Installation Standards. Is there a need to reference this standard for recreational park trailers? If so, in which section would the standard be referenced?

SEI/ASCE 32–01: HUD included this nationally recognized consensus standard as a reference standard for the design of specific foundations and references it in Subpart D.

UL 181: HUD included this nationally recognized standard as a referenced standard for the use of connectors for factory made air ducts.

HUD added referenced government publications 44 CFR 59 and 44 CFR 60 to § 3285.4 as they are referenced in Subpart B.

Definitions § 3285.5 (Consistency, Technical, Authority)—HUD accepted the majority of terms and definitions provided in the MHCC's proposed installation standards. However, HUD modified the sequence and text of certain terms and definitions. HUD eliminated reference to ''Official Definition'' and ''General Definitions''

but retained the vast majority of the terms and definitions that were provided by the MHCC in each category. Some terms and definitions have been added or deleted to clarify the meaning of a term and carry out the intent of the appropriate Model Installation Standards. Several definitions would also require modification to definitions in the MHCSS to ensure consistency with definitions provided in these Model Installation Standards and need further consideration. These are specifically identified.

''Anchor Assembly''—This definition has been added to clarify its use in the document and to retain the MHCC's more recent recommendation to replace the term ''ground anchor.''

''Approved'' is modified for consistency with 24 CFR part 3280.

''Authority Having Jurisdiction''—HUD deleted this term and its definition. This term is being replaced with the term ''Secretary.'' HUD believes this change retains the MHCC's intent and remains consistent with the Act, 24 CFR parts 3280 and 3282.

''Labeled'' is modified for consistency with 24 CFR part 3280.

''Listed'' is modified for consistency with 24 CFR part 3280.

''Must,'' ''Shall,'' and ''Should''—Except as specifically identified, all provisions of the Model Installation Standards are mandatory minimum requirements. Generally, references to ''should'' and ''shall'' have been replaced with ''must'' throughout the text of the Proposed Rule to retain consistency with **Federal Register** formatting.

''Anchor''—HUD did not incorporate the use of the term ''anchor'' because the definition is comparable to the definition of ''ground anchor'' in the MHCSS (24 CFR part 3280). HUD would also add the term ''anchor assembly'' to 24 CFR part 3280.302 to maintain consistency.

''Anchoring equipment''—HUD would modify the definition to include the term ''anchoring assembly.'' A companion change to 24 CFR part 3280.302 is required to maintain consistency.

''Anchoring system''—HUD revised the MHCC's definition to include the term ''anchoring assembly.'' A companion change to 24 CFR part 3280.302 is required to maintain consistency.

''Arid Region''—While HUD did not modify the definition of this term, comment is specifically invited. Should annual rainfall be the only definitive factor used to determine an arid region with dry soil conditions? Is there substantiation for the threshold of 15 inches or less of rainfall?

''Ground Anchor''—HUD modified this definition to indicate that a ground anchor is a type of anchor assembly.

''Installation''—HUD did not include the MHCC's proposed definition because the term is not defined within the Act. HUD believes that the term as used does not need to be defined separately and that the MHCC definition would create confusion and possible conflict between the Model Installation Standards, the MHCSS, and the Act.

''Installation Alteration''—HUD did not include this definition proposed by the MHCC because not all alterations are within HUD's scope of authority to regulate. However, HUD attempted to retain the MHCC's intent by adding § 3285.3 to the proposed rule, which addresses alterations during initial installation. Are the added provisions for alterations consistent with current practice?

''Installation Instructions''—HUD modified this proposed definition to clarify its application.

''Installation Standards''—HUD added this term because it appears in HUD's proposed Model Installation Standards. The proposed definition is consistent with the definition provided in the Act.

''Manufactured Home''—HUD modified this definition to be consistent with the Act.

''Manufactured Home Accessory Building or Structure''—HUD did not include this MHCC-proposed term and definition because the term does not appear within HUD's proposed Model Installation Standards and would have only applied to buildings and structures that are not within the scope of HUD's authority. Is there a specific need to define an accessory building or structure? If so, where would the term be used and how would the definition differ from common use of the term?

''Pier''—HUD modified this definition to retain consistency with all types of piers referenced in Subpart D of the proposed rule.

''Stabilizing Devices''—HUD included the terms ''ground'' and ''equipment'' in its proposed definition. A companion change to 24 CFR part 3280.302 is required to maintain consistency.

''Stand, Manufactured Home''—HUD did not include this MHCC-proposed term and definition as the term does not appear within HUD's proposed Model Installation Standards and may be confused with common usage of the term. Is there a specific need to define this term within the Model Installation Standards?

''Structure''—HUD did not include this term so that the common usage of the term will apply throughout the Model Installation Standards. Is there use of the term ''structure'' that would not be covered by the common usage of the term?

''Tie''—HUD modified this definition for consistency with 24 CFR part 3280.

''Diagonal Tie''—HUD modified this definition to combine the MHCC-proposed definition with the definition in 24 CFR part 3280. This change also requires a companion change to 24 CFR part 3280 to maintain consistency.

''Secretary''—HUD added this term and definition to replace the term ''Authority Having Jurisdiction'' in the MHCC's proposed model installation standards. HUD believes this change preserves the MHCC's intent to recognize those items under HUD's authority and retains consistency with 24 CFR parts 3280 and 3282.

''Design Approval Primary Inspection Agency''—HUD added this term because it appears within HUD's proposed Model Installation Standards. The definition remains consistent with the Act and 24 CFR part 3282.

''Working Load''—HUD added this term because it appears within HUD's proposed Model Installation Standards.

Subpart B—Pre-Installation Considerations

Subpart B incorporates provisions of Chapters 1 and 4 of the MHCC's proposed installation standards. Subpart B sets forth considerations for a home's installation relative to some site conditions, the design of the manufactured home, and the proposed foundation location. However, HUD has made certain modifications to the MHCC's proposal as outlined below.

Installation of Manufactured Homes in Flood Areas § 3285.101 (Relocated, Technical, Consistency)—HUD accepted the large majority of the MHCC provisions for flood hazard areas. The sections pertaining to flood hazard areas would be relocated from Chapter 1 of the MHCC document to Subpart B of the Model Installation Standards. The evaluation of a site for flood hazard exposure is a pre-installation consideration that should be taken into account prior to designing a foundation and installing the manufactured home at the site. Therefore, this responsibility is charged to installers.

All references to the issuance of permits in the MHCC proposal were relocated to Subpart J of the proposed rule because this function is not within HUD's authority. HUD also notes that the Federal Emergency Management Agency (FEMA) is currently in the process of updating its FEMA–85 document. HUD will consider updating

the Model Installation Standards to the revised FEMA document provided it is published prior to publication of the Model Installation Standards Final Rule.

Alterations (Relocate—See §§ 3285.3 and 3285.903)—HUD agrees with the intent of the MHCC regarding home alterations. However, HUD relocated the provisions for alterations during the initial installation to § 3285.3 to better fit the reorganization of the proposed rule. Provisions related to the obtaining of permits have been relocated to § 3285.903, as this function is not within HUD's authority.

Installation Considerations (Technical, Construction)—HUD would not include MHCC-proposed provisions for utility schematics in the Model Installation Standards but would codify a similar requirement in Subpart G providing for specific written instruction on the field assembly of ship loose parts. In addition, provisions for floor plans and approval by the Secretary have not been included in the proposed rule due to the establishment of other provisions requiring adequate installation instructions. While floor plans are not specifically required, the Model Installation Standards (§ 3285.2) do require home manufacturers to provide adequate installation instructions with each new home that will ensure the home can be installed in accordance with all provisions of the Model Installation Standards. However, HUD seeks comment on whether model-specific plans for installation should also be required? If so, what minimum information should be required on the plans (*e.g.* pier capacities, minimum, support and anchorage locations, other structural design requirements, plan-specific information for completion of utility systems, etc.)? Would the provisions in Subpart G of the proposed rule adequately provide for required utility schematics?

Home Installation Manual Supplements (Relocate—§ 3285.501)—HUD accepted the intent of the MHCC's proposal regarding additional information to be included in the manufacturer's installation instructions. However, this information would be relocated to § 3285.501 to better fit the reorganization of the proposed rule.

Design Zone Maps § 3285.102—HUD agrees with the intent of the MHCC's proposal regarding design zone maps. Specific use of the design zone maps is referenced in Subparts D and E to ensure proper location and design of the foundation and anchorage.

Moving Manufactured Home to Location § 3285.103 (Authority)—HUD agrees with the intent of the MHCC's proposal for moving manufactured homes to the installation site. However, regulation of this aspect is not within HUD's authority. Therefore, this information would be relocated to Subpart J, § 3285.902.

Permits, Other Alterations, and On-Site Structures § 3285.104 (Authority)—HUD agrees with the intent of the MHCC's proposal for these other considerations. However, regulation of these aspects is not within HUD's authority. Therefore, this information is relocated to § 3285.903.

Subpart C—Site Preparation

Subpart C of the proposed rule incorporates provisions of Chapter 5 of the MHCC proposed installation standards. Subpart C sets forth requirements for preparing the site or property where the foundation is to be constructed. These considerations include soil conditions, drainage, and ground moisture control. HUD agrees with and has incorporated the vast majority of the MHCC's proposed installation standards regarding site preparation. HUD would make certain modifications to the MHCC's proposal in the proposed rule as outlined below.

HUD relocated the MHCC's recommendations for *transporter access, encroachments, fire separation,* and *permits,* to subpart J of the proposed rule because they are not within the scope of HUD's authority but may be subject to LAHJ requirements.

Soil Conditions §§ 3285.201, 3285.202, and 3285.402 (Technical, Consistency)—HUD agrees with the majority of installation standards contained in the MHCC's proposed installation standards for soil conditions. HUD modified the MHCC's proposed standards for soil conditions, including the Table of Soil Classifications and Bearing Capacities for clarity, but preserved the MHCC's intent and as much MHCC-proposed language as practicable. HUD's proposed modifications also simplify and clarify the standard and incorporate classification of soils required for ground anchor selection consistent with the most current recommendations of the MHCC's ground anchor task force.

HUD's Model Installation Standards relocated and combined sections contained in the MHCC's proposal in order to simplify and condense certain requirements, such as removal of organic material. HUD seeks comment on the issue as to whether the standards should require that a minimum of six inches of soil, including the organic material, be removed under load bearing footings to ensure that footings are placed on undisturbed soil for at-grade footings?

HUD would modify the MHCC proposal so that soil data needed to determine bearing capacity and anchor selection is obtained through testing, soil records, or through an expanded table for soil classification. HUD did not include references to specific soil test methods and equipment contained in the MHCC proposal and instead would require testing to be in accordance with accepted engineering practice. HUD would also modify the MHCC's proposed Table for Soil Bearing Capacities by expanding its application to also be used for determining the numeric classification of soils for anchor selection, and by expanding the criteria in the Table to include torque probe and blow count values. This approach is consistent with the most current recommendations of the MHCC's ground anchor task force.

Drainage § 3285.204 (Consistency, Relocate—see § 3285.803)—HUD agrees with the majority of the MHCC's proposed installation standards related to drainage control. HUD has attempted to clarify the drainage requirements to incorporate the minimum slope requirements outlined in the figures proposed by the MHCC, and to incorporate more recent MHCC recommendations for instances where the slope is prohibited by property lines or other physical conditions. HUD relocated the MHCC's proposed requirements for drainage structures (ditches and culverts) to Subpart J of the proposed rule because the design and construction of such structures is subject to requirements of the LAHJ. HUD also revised the text and figures to eliminate permissive model installation standards and establish **Federal Register** formatting language.

Ground Moisture Control § 3285.204 (Technical)—HUD generally agrees with the majority of the MHCC's proposed installation standards for ground moisture control. HUD would modify the MHCC vapor barrier proposal so that the only exception for placement of a vapor barrier is provided in the Model Installation Standards. The proposed rule would not permit a LAHJ to establish a less stringent standard. It is HUD's position that exceptions for vapor barrier placement must be described within the Model Installation Standards because HUD cannot delegate rulemaking authority without proper notice and comment rulemaking. HUD would also make editorial revisions to the MHCC's proposal on vapor barrier installation, but the modifications would not change the substance or intent of the MHCC's proposal.

Drainage Structures (Authority)—HUD agrees with the intent of the

MHCC's proposal for drainage structures. However, regulation of this aspect of home installation is not within HUD's authority. Therefore, this information has been relocated to § 3285.904.

Subpart D—Foundations

Subpart D would incorporate the provisions of Chapter 6 of the MHCC document with only minimal modification as to substance or intent. Subpart D sets forth the requirements for the design and construction of the foundation for a manufactured home. This includes piers, footings, and other related support system components. HUD is in agreement with the large majority of the MHCC's proposed installation standards regarding foundations. However, HUD would make certain modifications to the MHCC's proposal as outlined below.

HUD notes that pier and footing tables and figures proposed in the Model Installation Standards provide an example with very prescriptive elements for foundations composed of the pier and footing type foundations specific to a home configuration and design assumptions outlined in footnotes. Pier and footing type foundations are common and currently provided for in manufacturer installation instructions. HUD intends that the requirements for pier and footing design and construction be used by States and manufacturers to develop and establish foundation systems appropriate for the homes produced by a manufacturer or installed in a State. The foundation systems developed would be required to equal or exceed the protection to residents provided by the Model Installation Standards. HUD must also consider the use of other foundation types, such as perimeter and permanent foundations, especially in States where HUD will operate the installation program.

HUD Questions: Should manufacturers who design their manufactured homes to be installed on perimeter or permanent foundations, in addition to pier, footing and anchor foundations, be required to provide DAPIA-approved installation instructions for perimeter and/or permanent foundations and the pier, footing, and anchor systems?

Will manufacturers be able to use the proposed Model Installation Standards to develop installation instructions for perimeter and permanent foundation installations? HUD specifically invites comment on the established requirements for the design of pier and footing foundations as well as alternative, perimeter, and permanent foundation designs and proprietary-type foundation systems.

Do the Model Installation Standards in this proposed rule adequately and clearly allow for alternative foundation designs? Does the document establish sufficient criteria to design a foundation not composed of piers and footings? Do the proposed Model Installation Standards provide adequate design criteria to permit a manufacturer or State to develop pier and footing foundations for homes that have characteristics different from the assumptions on which the tables are based?

Should the Model Installation Standards provide for the uniform testing of proprietary-type foundation systems? Should the Model Installation Standards and/or installation program regulations address review and/or approval of alternative foundation systems? Should designs prepared by registered professional engineers and architects as variations from DAPIA-approved designs, or that are designed for specific site conditions that are not included in a manufacturer's installation instructions, be required to be DAPIA-approved to ensure that the installation system or foundation is properly designed for the specific home and does not take the home out of compliance with the MHCSS? If the specific designs are not DAPIA-approved, what safeguards should be provided to assure that the variations in foundation and anchoring from the DAPIA-approved manufacturer's instructions do not take the home out of compliance with the MHCSS and adequately support and anchor the home? Specifically, if DAPIA approval were not required, how would HUD's installation program provide for the inspection and enforcement of these variations?

General § 3285.301 (Technical)—HUD agrees with the intent of the MHCC's proposed installation standards. HUD proposes to clarify the general requirements for foundations, so that foundation designs accommodate the site conditions, home design features, and loads the home was designed to withstand based on the design loads of the MHCSS.

Flood Hazard Areas § 3285.302—HUD incorporated the MHCC's proposal in the proposed rule.

Piers § 3285.303—HUD accepted the vast majority of the MHCC's proposed installation standards for piers. HUD made a few editorial changes to clarify its intent and retain consistency with other sections of HUD's proposed Model Installation Standards.

HUD Questions: HUD specifically invites comment on the Model Installation Standards established for manufactured piers. Should the Model Installation Standards include other design characteristics or standards for manufactured piers such as protection from the elements, material specifications, a testing protocol, or listing and labeling requirements? HUD is not aware of a nationally recognized testing protocol or listing requirements to which manufactured piers are currently tested or listed.

Design Requirements § 3285.303(c) (Technical)—HUD accepted the MHCC's recommendations for design requirements, but would modify the MHCC proposal to add a requirement that dead loads be considered in the design of foundations.

Pier Loads § 3285.303(d) (Technical)—The MHCC proposal indicated that the tables for pier loads must be used in the event the manufacturer installation instructions are not available. However, manufacturers are to use the Model Installation Standards as a model in the design of their installation instructions. Therefore, retaining the MHCC's proposal would create a circular reference. HUD revised the MHCC's proposed installation standards to require that the manufacturer's installation instructions must provide a level of protection that meets or exceeds the specifications of the Model Installation Standards. Manufacturers would be required to design foundations appropriate to their products that would support the appropriate design loads of the MHCSS and provide protection that equals or exceeds the support provisions found in Tables 3285.303(d)(1)(i) through (iii). To ensure that the designs are consistent with the tables, the design limitations used in the development of the tables are reflected as footnotes.

Configuration § 3285.304—HUD incorporated the MHCC proposals for pier configuration in the proposed rule.

Caps § 3285.304(b)—HUD accepted the proposal for pier caps contained in the MHCC's proposed installation standards. However, HUD specifically invites comment on the specifications for steel caps because the HUD and MHCC proposals include steel as an alternate material, but minimum thickness, corrosion protection, and yield strength have not been specified in the proposed Model Installation Standards.

Gaps § 3285.304(c)—HUD agrees with the MHCC's proposal regarding gaps. HUD modified the MHCC proposal to clarify that this section addresses only

gaps between the frame and pier. HUD specifically invites comment on the clarity of the proposed standards for gaps.

Clearance under homes § 3285.305—HUD has not modified the language or intent of the MHCC's proposal for clearance under homes. However, the section provides minimum clearance requirements only for areas of utility connections. Should the standard include minimum clearance in other areas such as areas required for access or inspection?

The standard specifies that no more than 25 percent of the lowest member of the home must be less than 12 inches above grade. As a practical matter, should the standard address requirements for instances where more than 25 percent of the home is less than 12 inches above grade? Should there be limitations or requirements on the percentage of a home's footprint that can be less than 12 inches above grade? The proposed requirements may need clarification in order to fully incorporate the MHCC's intent. HUD specifically invites comment on the clarity and practicality of this proposed requirement.

Design Procedures for Concrete Pier Blocks § 3285.306 (Technical, Consistency)—HUD accepted the great majority of the MHCC's proposed installation standards for the design of concrete piers. HUD would make editorial modifications to the MHCC's proposal to remove permissive Model Installation Standards, use appropriate terminology, and revise the proposed figure notes for consistency with the requirements of the proposed Model Installation Standards.

HUD specifically invites comment on the requirements of the proposed Model Installation Standards for mate-line supports. The MHCC proposal incorporated a provision to permit single stacked blocks to a maximum height of 54 inches. However, this contradicts limitations set for the construction of single stacked block piers (36 inches). Is there specific substantiation for permitting single stacked mate-line piers above 36 inches? Similarly, the MHCC-proposed installation standard requires that when more than 25 percent of the home's frame is more than 67 inches above the top of the footing, stabilizing devices must be specifically designed. However, the Model Installation Standards requirements indicate that double stacked piers may be used for up to 80 inches above the top of the footing. Is there specific substantiation for requiring special design for stabilization when more than 25 percent of the home's frame is more than 67 inches above the top of the footing? Are the requirements of this section clear and enforceable?

Perimeter Support Piers § 3285.307 (Relocate)—HUD accepted the intent and vast majority of language provided in the MHCC's proposed installation standards for perimeter support piers. HUD created a separate section to include these provisions.

Manufactured Piers § 3285.308 (Relocate)—HUD accepted the intent and vast majority of language provided in the MHCC's proposed installation standards for manufactured piers. HUD created a separate section to include these provisions.

Elevated Homes § 3285.309 (Relocate)—HUD accepted the intent and vast majority of language provided in the MHCC's proposed installation standards for elevated homes. HUD created a separate section to include these provisions.

Location and Spacing § 3285.310 (Technical)—HUD accepted the intent and majority of language provided in the MHCC's proposed installation standards for location and spacing of piers. However, HUD would require that dead load be considered in the design of foundations and has modified the MHCC proposal to include this consideration. HUD has made some editorial modifications to the notes on the figures related to mate-line column piers to clarify requirements and ensure consistency.

HUD requests comment on the need to incorporate specific figures in the proposed rule relating to mating wall piers, as the intent of the Model Installation Standards is to define provisions for the manufacturers' installation instructions and State-developed standards. The inclusion of the figures may add unnecessary confusion to the Model Installation Standards as manufacturers and States may develop specifications and other figures that correspond to the options and models produced and installed in their locale, and these may create conflict and confusion with the figures and footnotes published in the Model Installation Standards. Nonetheless, HUD proposes modifications to several notes of the figures that are intended to clarify requirements and maintain consistency with the Model Installation Standards.

Pier Support Locations § 3285.310(c) (Technical)—HUD does not agree with the intent of the MHCC's proposed language for pier support locations. The MHCC proposal contains requirements for single and multi-section homes indicating that the location and spacing of piers identified in the Model Installation Standards would only be applicable in the event that manufacturers instructions were not available. However, manufacturers are to use the Model Installation Standards in the design of their instructions. Therefore, retaining the MHCC's proposal would create a circular reference. HUD modified the MHCC proposal to require that the manufacturer's installation instructions equal or exceed the protections provided by the Model Installation Standards.

Required Perimeter Supports § 3285.311 (Technical)—HUD incorporated the language provided by the MHCC's proposed installation standards and would add a requirement for perimeter supports when required by the design of the home and the requirements set forth by the manufacturer's installation instructions. Therefore, HUD's proposed Model Installation Standards refer back to the applicable load tables and attempt to differentiate when perimeter supports are required for concentrated loads at openings versus when perimeter supports would be required for intermediate support of the home.

Footings § 3285.312 (Technical, Consistency)—HUD agrees with the language and intent of the MHCC's proposed installation standards but proposes that the reference to compacted fill be clarified to be consistent with Subpart C of the proposed rule. HUD also clarified several notes to the figures to ensure that they are compatible with the load tables and requirements outlined in the Model Installation Standards.

ABS Footing Pads § 3285.312(a)(3)—HUD has not modified the intent or a significant majority of the MHCC's proposed language for ABS footing pads. However, HUD specifically invites comment on the requirements of the Model Installation Standards for ABS footing pads. Specifically, HUD is not aware of a nationally recognized testing protocol or national consensus standard established for plastic-type footing pads. To what standard should ABS footing pads be listed and what type of criteria should be contained in the Model Installation Standards to ensure the products are durable and can be adequately and uniformly evaluated for review and approval?

Placement in Freezing Climates § 3285.312(b) (Technical)—HUD agrees with the MHCC's proposed installation standards for placement of footings in freezing climates. HUD modified the MHCC proposal by requiring footings to be placed below the frost line, unless

specifically designed otherwise as permitted by the Model Installation Standards. HUD would retain the MHCC's intent by permitting the LAHJ to establish the particular depth, because the depth varies with location. Attempting to specify a depth in the Model Installation Standards is not practicable since there is no national source available for local frost line depths. In areas where a jurisdiction is not established, a registered engineer, architect, or geologist must be retained to determine the frost line depth.

HUD's modification would also permit foundations above the frost line provided the design is prepared by a registered professional engineer or architect. HUD's Model Installation Standards would permit monolithic slab and insulated foundations above the frost line provided they are designed by a professional engineer or architect and conforms to the nationally recognized consensus standard, SEI/ASCE 32–01 and acceptable engineering practice.

Combination Systems § 3285.313—HUD incorporated the MHCC's proposal in the Model Installation Standards.

§ 3285. Permanent Foundations 314—HUD has not modified the intent or vast majority of language for permanent foundations. However, HUD specifically invites comment on permanent foundation requirements. The MHCC proposal indicated that permanent foundations are to be designed by a registered professional. However, the Model Installation Standards do not outline specific requirements or attempt to define a permanent foundation. Should the section be expanded to include a definition and expanded requirements for permanent foundations? If so, what specifics should be considered and included in the Model Installation Standards?

Special Snow Load Conditions § 3285.315 (Consistency, Relocate)—HUD agreed with the intent and majority of language provided by the MHCC for special snow load conditions. However, HUD made some changes to the MHCC's proposal to maintain consistency with other portions of the proposed rule. HUD made certain changes for consistency and moved the section on ramadas from the MHCC's Chapter 8 to this section because ramadas are sometimes used in high snow load areas.

Subpart E—Anchorage Against Wind

Subpart E would incorporate only the anchoring provisions from Chapter 7 of the MHCC proposal. Subpart E sets forth requirements related to the anchorage of manufactured homes against wind. HUD accepted the great majority of the MHCC's proposed installation standards regarding anchoring against wind. However, some portions of Chapter 7 of the MHCC proposal not related to anchoring have not been included or have been relocated to Subparts G, H, and I and changes to these portions are summarized here to align with the order and organization of the MHCC's installation standards.

Several sections contained within Chapter 7 of the MHCC's proposed installation standards do not relate to anchoring against wind. These sections include provisions necessary for joining sections of multi-section homes, which have been relocated to the appropriate Subpart for the specific type of work. These sections include: *Interconnection of Multi-section Homes, Crossover Connections for Multi-section Homes, Ductwork Crossovers, Installation Close-up Finishing, Exterior Siding Close-Up, Interior Close-Up,* and *Bottom Board Repair.*

Similarly, other sections contained within Chapter 7 of the MHCC's proposed installation standards do not relate to anchoring against wind and are not related to joining of close up of the home. Therefore, the following sections of the MHCC proposal have been relocated as follows:

Moving Manufactured Home to Location and Positioning of Home (Relocated—See § 3285.902)—These MHCC recommendations were accepted by HUD but relocated to Subpart J because they also do not establish standards for installation of the home but the provisions may be subject to LAHJ requirements.

Installation of On-Site Structures (Relocate, Technical, Authority)—HUD relocated most of the MHCC recommendations for on-site structures to Subpart J of this proposed rule because HUD does not have any authority to regulate the design and construction of the other structures but recognizes that the LAHJ may establish and enforce applicable requirements that an installer should consider. HUD moved the information with respect to expanding rooms to Subpart F where optional features are addressed. HUD also removed references to fire separation, as it is duplicative of information contained in Subpart J of the proposed rule.

Expanding Rooms (Relocate—See § 3285.502)—This section, relating to an optional feature, has been relocated in Subpart F of the proposed rule.

Unfinished Gypsum Wallboard (Construction)—HUD would not incorporate this MHCC proposal in the Model Installation Standards because the proposal does not provide or clarify requirements otherwise required by the MHCSS. Is there a specific need to incorporate flame spread rating requirements for interior finishes? HUD is of the opinion that such requirements relate to construction of the home and may be subject to Alternative Construction or other requirements for on-site construction to be published for comment separately.

HUD's Model Installation Standards would incorporate the remainder of chapter 7 of the MHCC's proposal with little revision as to substance or intent. However, HUD notes that anchoring against wind uplift at the mate-line has not been addressed by the MHCC's proposal. HUD specifically invites comment on the absence of requirements for anchoring at mate-lines of multi-section homes. Should HUD establish anchoring provisions for locations along the mate-line, such as column locations, for multi-section homes? If so, how? Is the current requirement for mate-line strapping, found in section § 3285.403, adequate to address such instances?

HUD proposes the following modifications to the MHCC proposals relating to anchoring provisions:

Anchoring Instructions § 3285.401 (Authority, Technical)—HUD would modify the MHCC proposal to require preparation of designs for alternative anchoring systems by registered engineers or registered architects. HUD would require that anchoring systems be designed, at a minimum, for the site conditions, home design features, and loads that the home was designed to withstand. Accordingly, HUD has modified the MHCC proposal to include appropriate Model Installation Standards permitting alternate designs.

HUD Questions: HUD invites comments on the review and approval of designs for anchoring systems that are not included in manufacturer's installation instructions. Do the Model Installation Standards adequately allow for such designs? Who should review and approve such designs? Have the Model Installation Standards adequately provided criteria for the review and evaluation of such anchoring systems and assemblies?

In general, HUD revised all references in the MHCC proposal to the term ''anchors,'' to the revised term ''ground anchor.'' HUD believes this is consistent with the MHCC's intent and maintains consistency with 24 CFR part 3280. HUD also notes that the nationally recognized protocol for testing ground anchor assemblies is currently under review by an MHCC installation subcommittee task force. HUD has modified the MHCC proposal to

incorporate provisions for galvanization of anchors and metal stabilizer plates in the Model Installation Standards. Are the galvanization provisions for ground anchor stabilizer plates and current requirements for galvanization of strapping (24 CFR part 3280.306(g)) adequate to resist corrosion under actual use and typical conditions?

Ground Anchor Installations § 3285.402 (Authority, Technical)—HUD accepted the intent and vast majority of language provided by the MHCC. However, HUD made some changes for clarity and to ensure that the ground anchor spacing identified in the tables is understood to be a maximum spacing that allows closer spacing as more stringent requirements. The MHCC's proposal for selection of ground anchors for an installation site refers back to MHCC proposed chapter 5 (Soil Conditions). However, the information provided by the MHCC for soil conditions did not provide information necessary to select appropriate anchors. Therefore, HUD modified the information provided in subpart C to ensure that soil classification can adequately be used to select ground anchors. HUD would also require all homes to be stabilized against wind in the longitudinal direction in all wind zones. Manufactured homes located in Wind Zones 2 and 3 would require longitudinal ground anchors at the ends of each transportable section.

HUD has not incorporated references in the MHCC proposal to methods and materials approved by the authority having jurisdiction because the additional requirements would be subject to notice and comment rulemaking procedures, and inclusion is not necessary given the Model Installation Standards as proposed by HUD, and the ability of LAHJs to establish more stringent requirements.

HUD modified the MHCC recommendation to require stabilizer plate installation as required by the ground anchor listing or certification rather than requiring stabilizer plates in all installations. HUD would require that metal stabilizer plates be galvanized consistent with coatings required for anchors and strapping and that anchoring assemblies be required to be installed in accordance with their listing or certification. The listing or certification may or may not require use of a stabilizer plate. HUD also made several editorial modifications to the notes for the ground anchor spacing tables and anchoring figure notes, to maintain consistency with requirements of the MHCSS, HUD's proposed modifications, and the intent of the MHCC.

Sidewall, Over-the-Roof, Mate-Line, and Shear wall straps § 3285.403 (Technical)—HUD agrees with the majority of the intent and language provided by the MHCC. However, HUD has added mate-line and shear wall straps to this section to ensure that such straps are anchored when provided.

Severe Climatic Conditions § 3285.404 (Technical)—HUD modified the MHCC proposal for installing ground anchors in frost-susceptible soil locations by modifying reference to high water table locations. The depth at which the soil freezes is the soil frost depth and its relationship to the water table is not readily available on a national basis.

Severe Wind Areas § 3285.405 (Technical)—HUD does not agree with the intent of the MHCC's proposed language for severe wind locations. The MHCC proposal indicated that anchoring in high wind areas be completed in accordance with the home manufacturer's installation instructions. However, the MHCC proposal did not contain a minimum design requirement for the installation instructions. HUD's acceptance of the MHCC proposal would have resulted in a circular reference, because the manufacturer's installation instructions must equal or exceed the requirements of the Model Installation Standards. Therefore, HUD proposes to modify this section by requiring that anchoring systems in high wind areas be designed by the home manufacturer for the special wind conditions or the anchorage must be designed by a professional engineer or registered architect in accordance with acceptable engineering practice for the increased wind design loads when site or other conditions prohibit the use of the manufacturers instructions. This modification clearly requires home manufacturers to provide instructions specific for the special wind conditions, or in the event that site or other conditions prevent the use of a manufacturer's instructions, a professional engineer or registered architect must design for the site conditions and special wind conditions. Does the proposed modification clarify the design requirements for high wind areas?

Flood Hazard Areas § 3285.406—HUD accepted the intent and language provided in the MHCC's proposed installation standards.

Subpart F—Optional Features

Subpart F incorporates certain portions of chapters 7, 8, and 9 of the MHCC proposal applicable to optional features. This subpart sets forth requirements for the installation and completion of optional features. Where retained, HUD's Model Installation Standards incorporate the majority of substance and intent of the applicable portions of the MHCC proposal. However, some portions of the MHCC proposal have been modified and others relocated to subpart J of the proposed rule. Areas covered in chapter 8 of the MHCC proposal that are not contained in subpart F of the proposed rule have not been incorporated in the proposed Model Installation Standards as described below. HUD's specific revisions to the MHCC proposal provided below.

Home Installation Manual Supplements § 3285.501 (Relocated, Technical)—HUD relocated the MHCC proposal regarding installation manual supplements to subpart F of the proposed rule because it largely relates to special or optional features of a home.

Expanding Rooms § 3285.502 (Relocated, Authority, Technical)—HUD revised the section of the MHCC proposal to remove any circular reference and clarify that the section would be applicable to the support and anchoring systems only. HUD's modifications would also omit the MHCC proposal that addressed when manufacturer installation instructions are not available because the manufacturer would be required to provide the instructions with each new home.

Installation of Optional Features (Construction)—HUD modified the MHCC proposal described below.

Hinged Roofs and Eaves (Technical, Relocate "See § 3285.801(f))—HUD would modify the MHCC proposal because hinged roof homes, depending on certain design characteristics, may be subject to special requirements such as Alternative Construction or other requirements to be developed in a separate proposed rule for on-site completion. Generally, hinged roof homes are not subject to Alternative Construction or requirements as long as the homes are designed to be located in Wind Zone 1, the completed hinged roof pitch is less than 7 on 12, and fuel burning appliance flue penetrations are not above the hinge.

Garden and Bay Windows (Construction)—HUD determined that the MHCC proposal provisions for garden or bay windows relate to construction of the home. Therefore, these optional features would be subject to Alternative Construction requirements or other requirements published by HUD for site completion of manufactured home construction and have not been included in the proposed Model Installation Standards.

Awnings and Ramadas (Relocate, Technical)—HUD did not accept the MHCC proposal relating to self-supporting awnings because awnings by design are not self-supporting and are not required to safely support the home. HUD relocated the MHCC's proposed provisions regarding ramadas to subpart D of the proposed rule where special snow load conditions are addressed. Is there a need to include a definition and provisions for awnings in the Model Installation Standards? Are there self-supporting awnings available and currently being installed to ensure continued safety of manufactured home residents?

Miscellaneous Lights and Fixtures (Relocate—§ 3285.702)—HUD relocated the MHCC proposal to Subpart H of the proposed rule relating to electrical systems and equipment.

Ventilation Options—HUD did not incorporate this MHCC proposal because it is not clear what type of ventilation would be subject to the proposed requirements (whole house, attic, crawlspace, etc.). Further, HUD believes crawlspace ventilation is adequately covered elsewhere in the document (§ 3285.504) and whole house and attic ventilation are subject to the requirements of the MHCSS. Would there be ventilation provisions in addition to whole house, attic, or crawlspaces that require provisions in the Model Installation Standards?

Optional Appliances § 3285.503 (Technical)—Provisions for the installation of the optional appliances addressed in Subpart F are incorporated, with minor changes, from Chapter 9 of the MHCC proposal. HUD would modify the appliance provisions to require that appliances be listed or labeled for their intended use.

Comfort Cooling Systems—HUD accepted the intent and most of the language in the MHCC's proposal for comfort cooling systems. However, HUD would revise the MHCC proposal to require appliance installation in accordance with the appliance manufacturer's instructions.

Air Conditioners—HUD would incorporate by reference, ACCA Manual J, Residential Load Calculation, as one method for calculating sensible heat gain. ACCA Manual J is based on the ASHRAE Handbook of Fundamentals and is accepted for use in State and local building codes. In addition, HUD would modify the MHCC proposal to incorporate provisions for air conditioning or combination heating and air conditioning systems as required by the MHCSS (§ 3280.714). While the MHCSS require that a heating system be installed in each manufactured home, they do not require an air conditioning system in each home. HUD has made modifications to the MHCC's proposed installation standards to help these issues and maintain consistency with the MHCSS.

Heat Pumps—HUD included provisions in the proposed rule to require that heat pumps be listed and installed in accordance with the appliance manufacturers instructions.

Evaporative Coolers—HUD modified the MHCC proposal to require that evaporative cooling equipment be listed and installed in accordance with the appliance manufacturer's instructions.

Fireplace and Wood-Stove Chimneys and Air Inlets—HUD accepted the MHCC's intent and most of the language proposed by the MHCC. HUD would modify the MHCC proposal to require that equipment be listed (§ 3285.5) for use in manufactured homes and installed in accordance with the appliance manufacturer's instructions.

Range, Cooktop, and Oven Venting—HUD accepted the MHCC's proposal but would make the Model Installation Standards applicable to all heat producing appliances that require completion of venting and change the title of the section to ''Venting.''

Clothes Dryer Exhaust Duct System—HUD agrees with the intent of the MHCC proposal but would revise the MHCC proposal to require the exhaust duct system to conform to the appliance manufacturer's requirements of the MHCSS (§ 3280.708).

Crawlspace Ventilation § 3285.505 (Technical)—HUD agrees with the MHCC that crawlspaces with a perimeter enclosure need ventilation. HUD would modify the MHCC proposal to remove duplication of the exceptions for ground vapor barriers, and modify the ventilation requirements to be consistent with model building code requirements.

Subpart G—Ductwork and Plumbing and Fuel Supply Systems

Subpart G includes provisions from chapters 7 and 10 of the MHCC's proposed installation standards. This subpart provides for installation work necessary to join sections of a multi-section home and make the home ready to connect the plumbing and fuel supply systems to utilities. Where retained in this subpart, HUD's Model Installation Standards incorporate the vast majority of the substance and intent of the applicable portions of the MHCC proposal. However, HUD would modify slightly some portions of the MHCC proposal and relocate them to subpart J, while a small number of MHCC proposals would be omitted from the proposed rule. These actions are described below.

Field Assembly § 3285.601 (New Section)—HUD would add a section that clearly requires home manufacturers to provide specific written instructions for installers on the proper field assembly of any ship loose parts necessary to join all sections of the home. HUD would further require that the instructions be designed in accordance with the applicable requirements of the MHCSS.

Proper Procedures (Relocate—See § 3285.905)—In general, HUD has concluded that utility connections are subject to State or LAHJ requirements. Since HUD does not have authority to regulate utility connections or determine that any particular requirements of an LAHJ are met, HUD relocated these MHCC-proposed installation standards to Subpart J.

Water Supply § 3285.603 (Relocate, Technical, Consistency)—In general, HUD accepted the intent and language of the MHCC's proposals related to water supply. HUD would revise certain provisions of this section as follows:

Crossovers—The Model Installation Standards would require water line crossovers to be installed as designed by the home manufacturer. However, the manufacturer would be required to design the crossover consistent with the current requirements of the MHCSS (§ 3280.609).

Maximum Supply Pressure and Reduction—HUD would modify the MHCC-proposed requirement for a pressure-reducing valve by omitting the prescriptive requirement for a bypass-type valve. While HUD would not prohibit a bypass valve, specific requirements would be subject to the LAHJ.

Mandatory Shutoff Valve—HUD revised the MHCC proposal editorially, but maintained the intent of the MHCC's proposal.

Freezing Protection—HUD revised the MHCC proposal to maintain consistency with the requirements of the MHCSS and require that the manufacturer's installation instructions be designed consistent with the MHCSS (§ 3280.603).

Testing Procedures—HUD revised the MHCC proposal to ensure that testing requirements at the site are consistent with the requirements of the MHCSS.

HUD did not incorporate the figure in the MHCC proposal depicting a typical water line connection. In HUD's opinion, the figure shows an ill-advised location of the supply connection that subjects the water line and connections to physical damage. In addition, the figure would not clarify the

requirements of the Model Installation Standards.

Drainage System § 3285.604 (Relocate, Technical, Consistency)—HUD relocated the MHCC's provisions for connection of the system to the sewer system to Subpart J. In general, HUD accepted the intent and language of the MHCC. However, HUD revised certain provisions of this section as follows:

Crossovers—The Model Installation Standards would require water line crossovers to be installed as designed by the home manufacturer. However, the manufacturer would be required to design the crossover consistent with the current requirements set forth in the MHCSS (§ 3280.610).

Assembly and Support—HUD would necessarily limit the MHCC's assembly and support provisions to only the piping that is necessary to join all sections of the home. Proper assembly and pipe support requirements would be revised to maintain consistency with requirements of the MHCSS (§ 3280.608).

Proper Slopes—Proper slope for the pipe would be revised to maintain consistency with requirements of the MHCSS (§ 3280.610).

Testing Procedures—HUD revised the MHCC proposal to ensure that testing requirements at the site are consistent with the requirements of the MHCSS.

Gas System § 3285.605 (Relocate, Technical, Consistency)—Certain MHCC proposals for conversion of appliances and startup procedures have been modified and relocated in Subpart J of the proposed rule. In addition, HUD did not accept the MHCC's recommendation requiring inspection of roof jacks as the proposed provision outlines a process that is procedural in nature and would be subject to HUD's Alternate Construction requirements. However, HUD will consider the proposal further in the development of installation program regulations to be issued separately.

However, in general, HUD agrees with the intent and language of the MHCC's proposals. HUD would revise certain provisions of this section as follows:

Crossovers—The Model Installation Standards would require gas line crossovers to be installed as designed by the home manufacturer. However, the manufacturer would be required to design the crossover consistent with the current requirements set forth in the MHCSS (§ 3280.705).

Testing Procedures—HUD revised the MHCC proposal to ensure that testing requirements at the site are consistent with the requirements of the MHCSS.

Heating Oil Supply Tanks and Systems (Relocate—see § 3285.906)—Provisions for heating oil supply tanks and systems installed at the site are not within the scope of HUD's authority. However, HUD attempted to preserve the MHCC's intent by making the MHCC provisions recommendations in subpart J for inclusion in manufacturer installation instructions.

Ductwork Connections § 3285.606 (Technical, Consistency)—HUD accepted the great majority of the MHCC's proposed installation standards for ductwork connections. However, HUD added a specific requirement for crossover connection and design, and would modify the associated figures to remove the specificity of particular components or requirements to make the figures more universally applicable, and ensure that manufacturers can design crossovers that are compatible with the models and options produced. HUD would also require that the level of insulation for exposed ducts conform to the provisions of the MHCSS.

Subpart H—Electrical Systems and Equipment

Subpart H includes certain provisions of Chapter 8 of the MHCC's proposed installation standards. Subpart H provides for the installation work necessary to join sections of a multi-section home and make the home ready to connect the electrical service. There may be information currently addressed by manufacturer's installation instructions that has not been evaluated by the MHCC or reviewed for inclusion in the MHCC's proposal. Therefore, HUD specifically invites comment on the substance of this subpart and related issues that should or should not be addressed herein.

Electrical Crossovers § 3285.701 (New Section)—HUD added provisions for completion of electrical crossovers as designed by the home manufacturer. This section requires manufacturers to design the crossovers consistent with requirements of subpart I of the MHCSS.

Miscellaneous Lights and Fixtures § 3285.702 (Technical)—HUD accepted the vast majority of the MHCC's provisions for miscellaneous lights and fixtures with only minimal or editorial changes.

Subpart I—Exterior and Interior Close Up

Subpart I includes certain provisions of chapters 7 and 8 of the MHCC's proposed installation standards. Subpart I provides for the installation close up work necessary to join sections of a multi-section home and complete final bottom board repairs.

Exterior Close Up § 3285.801 (Relocate, Technical, Consistency)—HUD accepted the vast majority of the MHCC's proposed installation standards for exterior close up. However, HUD would limit the exterior close up work to only the aspects necessary to join the sections of multi-section homes resulting in a weatherproof and structurally integrated home. HUD also included roofing materials as elements that require completion at the installation site.

Structural Interconnection of Multi-section Homes § 3285.802 (Relocate, Technical, Consistency)—HUD accepted the intent and majority of language provided in the MHCC's proposal. HUD added the requirement that the manufacturer design interconnection be consistent with the structural requirements of the MHCSS. HUD also added provisions to require repair of gaps that may occur along the mate-line where structural interconnections are made.

Interior Close Up § 3285.803 (Relocate, Technical, Construction)—HUD accepted the majority of MHCC-recommended provisions for interior close up. However, HUD removed the MHCC's reference to unfinished gypsum wallboard, as HUD deems this to be construction and assembly of the manufactured home.

Bottom Board Repair § 3285.804 (Relocate, Technical)—HUD accepted the vast majority of the MHCC provisions for bottom board repair with minimal change. The MHCC proposal requiring an approved tape to be used to repair bottom board splits or tears, would be revised in the proposed rule to "* * * tape or patches specifically designed for repairs of the bottom covering."

Subpart J—Recommendations for Manufacturer's Installation Instructions

The provisions of subpart J incorporate recommendations from the MHCC contained in several chapters. This subpart sets forth provisions regarding moving the manufactured home, permits, on-site structures, and site connection of utilities upon completion of home installation. The vast majority of recommendations from the MHCC concerning utility connections would establish requirements that may be governed by LAHJs and are not within the scope of HUD's authority. HUD has included most of the recommendations in the Model Installation Standards to provide helpful information to installers. HUD specifically invites comment on the inclusion of these provisions within the Model Installation Standards.

Recommendations for Manufacturer Installation Instructions § 3285.901 (New section)—Generally, work completed at the site with respect to utility connections is governed by LAHJ requirements. Therefore, the Model Installation Standards do not attempt to address comprehensive utility connection requirements. However, HUD recommends in subpart J that manufacturers incorporate the following provisions in their installation instructions, in order to protect the manufactured home as constructed in accordance with the MHCSS and provide other general cautions to the installer.

Moving the Manufactured Home to Location § 3285.902 (Relocated, Authority)—HUD relocated the MHCC's proposals to address transporter access, positioning of the home, and encroachment and setback distances that may be enforced by LAHJs to Subpart J. HUD modified the proposal editorially and organized the MHCC proposed requirements related to moving the manufactured home to the installation site in this section.

Permits, Alterations, and On-Site Structures § 3285.903 (Relocated, Authority)—HUD relocated MHCC recommended provisions for permits, alterations, and construction of on-site structures such as garages, carports, and decks to subpart I. While HUD does not have authority to regulate the permit process or the review and approval of alterations, and on-site structures, HUD included provisions for these aspects to be mentioned in home manufacturer installation instructions.

Drainage Structures § 3285.904 (Relocated, Authority)—HUD relocated MHCC-recommended provisions for drainage structures to subpart J. While HUD does not have authority to regulate the design and construction of ditches and culverts, HUD included appropriate provisions for manufacturers to provide recommendations in their home installation instructions.

Utility System Connection § 3285.905 (Relocated, Authority)—HUD relocated the MHCC proposal to address the drainage connector size. In addition, HUD modified the proposal to remove reference to the requirements of an LAHJ, as such requirements are not under HUD's authority. HUD also relocated the MHCC proposal to address gas system orifices and regulators and modified the gas appliance startup procedures.

HUD modified language regarding personnel requirements associated with gas appliance startup to make personnel subject to the requirements of the LAHJ. In addition, HUD would revise the testing procedure to recognize that not all appliances contain pilot lights and newer technologies can be verified to meet the MHCC's intent. HUD did not accept the MHCC proposal to set thermostats to desired temperature because subjective requirements cannot be enforced.

Heating Oil Systems § 3285.906 (Relocated, Authority)—HUD relocated the MHCC proposal to address the installation of heating oil systems and tanks to Subpart J, as such installations are not within HUD's authority. HUD modified the MHCC proposal to include a recommended reference standard (NFPA 31) that may be used in areas without an LAHJ or in areas without applicable requirements. HUD revised the MHCC's heating oil system installation recommendations and would make such recommendations subject to specific requirements of an LAHJ. However, the model provisions would become more of a necessity in areas without jurisdictions or applicable requirements. HUD would incorporate the NFPA 31 standard for reference in such instances.

HUD did not incorporate the MHCC proposal relating to a centralized oil distribution system because the Model Installation Standards would not establish standards for manufactured home communities that may have a storage tank for centralized distribution of oil within the community. Other MHCC-recommended provisions for oil storage tanks have been incorporated into the Model Installation Standards. HUD would revise the MHCC proposal related to storage tank leak test procedures by recognizing that model provisions are necessary for areas without jurisdictions or without requirements, and would incorporate the consensus standard, NFPA 31 for such instances.

VI. Findings and Certifications

Regulatory Planning and Review

The Office of Management and Budget (OMB) reviewed this rule under Executive Order 12866 (entitled ''Regulatory Planning and Review''). OMB determined that this rule is a ''significant regulatory action'' as defined in section 3(f) of the order (although not an economically significant regulatory action, as provided under section 3(f)(1) of the order). Any changes made to the rule subsequent to its submission to OMB are identified in the docket file, which is available for public inspection in the Regulations Division, Room 10276, Office of General Counsel, Department of Housing and Urban Development, 451 Seventh Street, SW, Washington, DC 20410–0500.

Paperwork Reduction Act

The proposed information collection requirement contained in § 3285.2 has been submitted to the Office of Management and Budget (OMB) for review under the Paperwork Reduction Act of 1995 (44 U.S.C. 3501–3520). Under this Act, an agency may not conduct or sponsor, and a person is not required to respond to, a collection of information unless the collection displays a valid control number. OMB has issued HUD the control number 2502–0253 for the information collection requirements under the current Manufactured Housing Construction and Safety Standards Program, which already require manufacturer installation instructions in 24 CFR part 3280.306.

The public reporting burden for this collection of information is estimated to include the time for reviewing the instructions, searching existing data sources, gathering and maintaining the data needed, and completing and reviewing the collection of information.

The following table provides Information on the estimated public reporting burden:

Information collection	Number of respondents	Responses per respondent	Total annual responses	Hours per response	Total hours
Manufacturers Installation Instructions*	78	1	78	250	19,500

*Manufacturer installation instructions are already required. This public burden estimate is for a one-time revision of its instructions to ensure the Model Installation Standards requirements would be met.

In accordance with 5 CFR 1320.8(d)(1), HUD is soliciting comments from members of the public and affected agencies concerning the proposed collection of information to:

(1) Evaluate whether the proposed collection of information is necessary for the proper performance of the functions of the agency, including whether the information will have practical utility;

(2) Evaluate the accuracy of the agency's estimate of the burden of the proposed collection of information;

(3) Enhance the quality, utility, and clarity of the information to be collected; and

(4) Minimize the burden of the collection of information on those who are to respond, including through the use of appropriate automated collection techniques or other forms of information technology (*e.g.*, permitting electronic submission of responses).

Interested persons are invited to submit comments regarding the information collection requirements in this proposal. Under the provisions of 5 CFR part 1320, OMB is required to make a decision concerning this collection of information between 30 and 60 days after today's publication date. Therefore, any comment on the information collection requirements is best assured of having its full effect if OMB receives the comment within 30 days of today's publication. However, this time frame does not affect the deadline for comments to the agency on the proposed rule, however. Comments must refer to the proposal by name and docket number (FR–4928–P–01) and must be sent to:

Mark D. Menchik, HUD Desk Officer, Office of Management and Budget, New Executive Office Building, Washington, DC 20503, *Mark_D._Menchik@omb.eop.gov*;

and

Kathleen O. McDermott, Reports Liaison Officer, Office of the Assistant Secretary for Housing—Federal Housing Commissioner, Department of Housing and Urban Development, 451 Seventh Street, SW., Room 9116, Washington, DC 20410–8000.

Unfunded Mandates Reform Act

Title II of the Unfunded Mandates Reform Act of 1995 (2 U.S.C. 1531–1538) (UMRA) establishes requirements for Federal agencies to assess the effects of their regulatory actions on State, local, and tribal governments, and on the private sector. This proposed rule does not impose any Federal mandate on any State, local, or tribal government, or on the private sector, within the meaning of UMRA.

Environmental Review

A Finding of No Significant Impact with respect to the environment has been made in accordance with HUD regulations at 24 CFR part 50, which implement section 102(2)(C) of the National Environmental Policy Act of 1969 (42 U.S.C. 4332(2)(C)). The Finding of No Significant Impact is available for public inspection between the hours of 8 a.m. and 5 p.m. weekdays in the Regulations Division, Office of General Counsel, Room 10276, Department of Housing and Urban Development, 451 Seventh Street, SW, Washington, DC 20410–0500.

Executive Order 13132, Federalism

Executive Order 13132 (entitled ''Federalism'') prohibits, to the extent practicable and permitted by law, an agency from promulgating a regulation that has Federalism implications and either imposes substantial direct compliance costs on State and local governments and is not required by statute, or preempts State law, unless the relevant requirements of section 6 of the Executive Order are met. This rule does not have Federalism implications and does not impose substantial direct compliance costs on State and local governments or preempt State law within the meaning of the Executive Order.

HUD is required by statute to establish Model Manufactured Home Installation Standards through the National Manufactured Housing Construction and Safety Standards Act of 1974 (42 U.S.C. 5401–5426). However, in accordance with the language of the Act and as set forth in § 3285.1 of this proposed rule, these Model Installation Standards are not preemptive but rather establish minimum levels of protection to residents of manufactured homes.

The Model Installation Standards, without the implementing regulations to be developed for the Federal installation program, establish requirements for installation instructions but do not have an impact on State-based installation programs and standards. These minimum requirements do not affect governmental relationships or distribution of power. This proposed rule does not establish any responsibilities for States and localities but rather establishes minimum requirements to be used by home manufacturers in the design of manufactured home installation instructions. Therefore, HUD has determined that the Model Installation Standards, if adopted, have no Federalism implications that warrant the preparation of a Federalism Assessment in accordance with Executive Order 13132.

Regulatory Flexibility Act

The Regulatory Flexibility Act (5 U.S.C. 601 et seq.) requires that a regulation that has a significant economic impact on a substantial number of small entities, small businesses, or small organizations include an initial regulatory flexibility analysis describing the regulation's impact on small entities. Such an analysis need not be undertaken if the agency has certified that the regulation will not have a significant economic impact on a substantial number of small entities. 5 U.S.C. 605(b).

HUD has conducted a material and labor cost impact analysis for this rule. The completed cost analysis determines the cost difference between a typical installation conforming to the Model Installation Standards from an installation completed in accordance with current manufacturer installation instructions. A typical installation is defined by the traditional installation method consisting of concrete footings, masonry piers, and ground anchors. The cost difference was found to vary slightly depending upon whether the home is a single-section or multi-section home.

The cost impact for a single-section home is determined to be about $133 per home and the cost impact for a multi-section home is determined to be about $151 per home. Current manufactured home production is about 135,000 homes, consisting of about 40,500 single-section homes and 94,500 multi-section homes. The combined average cost impact is determined to be approximately $145.60 per home multiplied by a total of 135,000 homes produced in a year; this totals about $19.5 million annually.

Based on a current installation cost of about $5000 for a single-wide home, the $133 increase represents an increase of about 2.7% from the current cost of installing a single section home. Similarly, the current cost of installing a multi-section home is about $8,000. Therefore, the cost impact of $151 per multi-section home represents an increase of about 1.9% from the current cost. These estimated costs and cost impacts do not represent a significant economic effect on either an industry-wide or per-home basis.

This small increase in total cost associated with this proposed rule would not impose a significant burden for a small business. The rule would regulate establishments primarily engaged in making manufactured homes (NAICS 32991) and the mobile home setup and tie-down establishments (installers) included within the

definition of all other special trade contractors (NAICS 23599). Of the 222 firms included under the NAICS 32991 definition, 198 are small manufacturers that fall below the small business threshold of 500 employees. Of the 31,320 firms included under NAICS 23599 definition, only 53 firms exceed the small business threshold of 500 employees and none of these are primarily mobile home setup and tie-down establishments. The rule, thus, would affect a substantial number of small entities. However, the home manufacturers would only be subject to an associated labor cost necessary to revise its instructions and the home installer would be subject to increased labor and material costs that would be passed through to the end user (manufactured home purchaser). Moreover, because the great majority of manufacturers and all installers are considered small entities, there would not be any disproportional impact to small entities. Therefore, although this rule would affect a substantial number of small entities, it would not have a significant economic impact on them.

The Secretary, in accordance with the Regulatory Flexibility Act (5 U.S.C. 605(b)), has reviewed and approved this proposed rule and in so doing certifies that the rule would not have a significant economic impact on a substantial number of small entities. The proposed rule does not provide an exemption for small entities. This proposed rule does not establish any responsibilities for installers but rather establishes model requirements used by manufacturers in the design of manufactured home installation instructions. However the upcoming installation program, establishing procedural and enforcement regulations for the Installation Standards will need further review under the requirements of the Regulatory Flexibility Act.

Notwithstanding HUD's determination that this rule would not have a significant economic effect on a substantial number of small entities, HUD specifically invites comments regarding any less burdensome alternatives to this rule that will meet HUD's and Federal statutory objectives.

Catalogue of Federal Domestic Assistance

The Catalogue of Federal Domestic Assistance number is 14.171.

List of Subjects

24 CFR Part 3280

Housing standards, Manufactured homes, Construction, Safety.

24 CFR Part 3285

Housing standards, Manufactured homes, Installation.

Accordingly, for the reasons discussed in this preamble, HUD proposes to amend 24 CFR part 3280 and to add 24 CFR part 3285, as follows:

PART 3280—MANUFACTURED HOME CONSTRUCTION AND SAFETY STANDARDS

1. The authority citation for 24 CFR part 3280 continues to read as follows:

Authority: 42 U.S.C. 3535(d), 5403, 5404, and 5424.

2. In § 3280.302, add the definition of *anchor assembly* in alphabetical order and revise the definitions of *anchoring equipment, anchoring system, diagonal tie, ground anchor* and *stabilizing devices* to read as follows:

§ 3280.302 Definitions.

* * * * *

Anchor assembly means any device or other means designed to transfer home anchoring loads to the ground.

Anchoring equipment means ties, straps, cables, turnbuckles, chains, and other approved components, including tensioning devices that are used to secure a manufactured home to anchor assemblies.

Anchoring system means a combination of anchoring equipment and anchor assemblies that will, when properly designed and installed, resist the uplift, overturning, and lateral forces on the manufactured home.

Diagonal tie means a tie intended to resist horizontal or shear forces, but which may resist vertical, uplift, and overturning forces.

* * * * *

Ground anchor means a specific anchoring assembly device designed to transfer home anchoring loads to the ground.

* * * * *

Stabilizing devices means all components of the anchoring and support systems, such as piers, footings, ties, anchoring equipment, anchoring assemblies, or any other equipment, materials, and methods of construction that support and secure the manufactured home to the ground.

* * * * *

3. In § 3280.306, revise paragraph (b)(2)(iv) to read as follows:

§ 3280.306 Windstorm protection.

* * * * *

(b) * * *

(2) * * *

(iv) That ground anchors should be installed to their full depth, and stabilizer plates must be installed in accordance with the ground anchor listing or certification to provide required resistance to overturning and sliding.

* * * * *

4. In chapter XX, add part 3285 to read as follows:

PART 3285—MODEL MANUFACTURED HOME INSTALLATION STANDARDS

Subpart A—General

Sec.

3285.1 Administration.
3285.2 Manufacturer installation instructions.
3285.3 Alterations during initial installation.
3285.4 Referenced publications.
3285.5 Definitions.

Subpart B—Pre-Installation Considerations

3285.101 Installation of manufactured homes in flood hazard areas.
3285.102 Design zone maps.
3285.103 Moving manufactured home to location.
3285.104 Permits, other alterations, and on site structures.

Subpart C—Site Preparation

3285.201 Soil conditions.
3285.202 Soil classifications and bearing capacity.
3285.203 Drainage.
3285.204 Ground moisture control.

Subpart D—Foundations

3285.301 General.
3285.302 Flood hazard areas.
3285.303 Piers.
3285.304 Configuration.
3285.305 Clearance under homes.
3285.306 Design procedures for concrete block piers.
3285.307 Perimeter support piers.
3285.308 Manufactured piers.
3285.309 Elevated homes.
3285.310 Pier locations and spacing.
3285.311 Required perimeter supports.
3285.312 Footings.
3285.313 Combination systems.
3285.314 Permanent foundations.
3285.315 Special snow load conditions.

Subpart E—Anchorage Against Wind

3285.401 Anchoring instructions.
3285.402 Ground anchor installations.
3285.403 Sidewall, over-the-roof, mate-line, and shear wall straps.
3285.404 Severe climatic conditions.
3285.405 Severe wind zones.
3285.406 Flood hazard areas.

Subpart F—Optional Features

3285.501 Home installation manual supplements.
3285.502 Expanding rooms.
3285.503 Optional appliances.
3285.504 Skirting.
3285.505 Crawlspace ventilation.

Subpart G—Ductwork and Plumbing and Fuel Supply Systems

3285.601 Field assembly.

3285.602 Utility connections.
3285.603 Water supply.
3285.604 Drainage system.
3285.605 Fuel supply system.
3285.606 Ductwork connections.

Subpart H—Electrical Systems and Equipment

3285.701 Electrical systems.
3285.702 Miscellaneous lights and fixtures.
3285.703 Smoke alarms.
3285.704 Telephone and cable TV.

Subpart I—Exterior and Interior Close-Up

3285.801 Exterior close-up.
3285.802 Structural interconnection of multi-section homes.
3285.803 Interior close-up.
3285.804 Bottom board repair.

Subpart J—Recommendations for Manufacturer Installation Instructions

3285.901 Recommendations for manufacturer installation instructions.
3285.902 Moving manufactured home to location.
3285.903 Permits, alterations, and on-site structures.
3285.904 Drainage structures.
3285.905 Utility systems connection.
3285.906 Heating oil systems.
3285.907 Telephone and cable TV.

Authority: 42 U.S.C. 3535(d), 5403, 5404, and 5424.

Subpart A—General

§ 3285.1 Administration.

(a) *Scope.* These Model Installation Standards provide requirements for the initial installation of new manufactured homes in applicable States. Work necessary to join all sections of a multi-section home, such as work identified in subparts G, H, and I, is not considered assembly or construction of the home, although the design of those elements of a manufactured home must comply with the MHCHSS.

(1) States that choose to operate an installation program for manufactured homes in lieu of the Federal program must implement installation standards that provide protection to its residents that equals or exceeds the protection provided by these Model Installation Standards.

(2) In States that do not choose to operate their own installation program for manufactured homes, these Model Installation Standards serve as the minimum standards for manufactured home installations.

(3) Manufacturer installation instructions, as set forth in § 3285.2, must provide protection to residents of manufactured homes that equals or exceeds the protection provided by these Model Installation Standards.

(b) The standards set forth herein have been established to accomplish certain basic objectives and are not to be construed as relieving manufacturers, retailers, installers, or other parties of responsibility for compliance with applicable ordinances, codes, and regulations.

(c) *State installation standards.* (1) In States with an approved installation program, the State may establish or permit more stringent installation standards that provide a level of protection that equals or exceeds these Model Installation Standards.

(2) In States without an approved installation program, the Secretary will implement and enforce these Model Installation Standards as minimums. The Secretary will permit more stringent installation standards as long as the level of protection provided by those standards equals or exceeds these Model Installation Standards.

(d) *Applicability.* The manufactured homes covered by this standard must comply with requirements of the U.S. Department of Housing and Urban Development's (HUD's) Federal Manufactured Home Construction and Safety Standards (MHCSS) Program, as set forth in 24 CFR part 3280, *Manufactured Home Construction and Safety Standards,* and 24 CFR part 3282, *Manufactured Home Procedural and Enforcement Regulations.* The requirements of this part do not apply to homes installed on site-built permanent foundations when the manufacturer certifies the home in accordance with § 3282.12 of this chapter.

§ 3285.2 Manufacturer installation instructions.

A manufacturer must provide with each new manufactured home, DAPIA-approved designs and instructions required by these Model Installation Standards for the installation of manufactured homes. The manufacturer installation instructions must provide protection to residents of the manufactured homes that equals or exceeds the protection provided by these Model Installation Standards and must not take the manufactured home out of compliance with the Federal Manufactured Home Construction and Safety Standards. Installers must follow the DAPIA-approved manufacturer's installation instructions for those aspects covered by these Model Installation Standards.

§ 3285.3 Alterations during initial installation.

Additions, modifications, or replacement or removal of any equipment that affects the installation of the home, made by the manufacturer, retailer or installer prior to completion of the installation by an installer must equal or exceed the protections and requirements of these Model Installation Standards, the MHCSS (24 CFR part 3280) and the Manufactured Home Procedural and Enforcement Regulations (24 CFR part 3282). Alterations, as defined in § 3282.7 of this chapter, must not affect the ability of the basic manufactured home to comply with the MHCSS and must not impose additional loads to the manufactured home or its foundation without design by a registered professional engineer or registered architect, or being expressly included in the manufactured home manufacturer DAPIA-approved designs or installation instructions.

§ 3285.4 Referenced publications.

Incorporation by reference: (a) The specifications, standards and codes of the following organizations are incorporated by reference pursuant to 5 U.S.C. 552(a) and 1 CFR part 51 as though set forth in full. The incorporation by reference of these standards has been approved by the Director of the Federal Register. Reference standards have the same force and effect as these Model Installation Standards except that whenever reference standards and these Standards are inconsistent, the requirements of these Standards prevail to the extent of the inconsistency.

(b) The abbreviations and addresses of organizations issuing the referenced standards appear below. Reference standards that are not available from their producer organizations may be obtained from the Office of Manufactured Housing Programs, Room 9164, U.S. Department of Housing and Urban Development, 451 Seventh Street, SW., Washington, DC 20410.

ACCA Publication. Air Conditioning Contractors of America, 2800 Shirlington Road, Suite 300, Arlington, VA 22206.

ACCA Manual J, Residential Load Calculation, 8th Edition.

ASHRAE Publication. American Society of Heating, Refrigeration and Air Conditioning Engineers, 1791 Tullie Circle, NE., Atlanta, GA 30329–2305.

ASHRAE Handbook of Fundamentals, 1997.

ASTM Publications. American Society for Testing and Materials, 100 Barr Harbor Drive, West Conshohocken, PA 19428–2959.

ASTM C 90, Standard Specification for Loadbearing Concrete Masonry Units, 2002.

ASTM D 1586, Test Method for

Penetration Test and Split-Barrel Sampling of Soils, 1999.
ASTM D 2487, Practice for Classification of Soils for Engineering Purposes (Unified Soil Classification System), 2000.
ASTM D 2488, Practice for Description and Identification of Soils (Visual-Manual Procedure), 2000.
ASTM D 3953, Standard Specification for Strapping, Flat Steel and Seals, 1997.

AWPA Publications. American Wood-Preservers' Association, P.O. Box 5690, Granbury, TX 76049.
AWPA C2, Standard for the Preservative Treatment of Lumber, Timber, Bridge Ties and Mine Ties, by Pressure Processes, 2001.
AWPA C9, Plywood—Preservative Treatment by Pressure Processes, 2000.

NFPA Publications. National Fire Protection Association, 1 Batterymarch Park, Quincy, MA 02169–7471.
NFPA 31, Standard for the Installation of Oil Burning Equipment, 2001.
NFPA 501A, Standard for Fire Safety Criteria for Manufactured Home Installations, Sites, and Communities, 2003.

SEI/ASCE Publication. Structural Engineering Institute/American Society of Civil Engineers, 1801 Alexander Bell Dr., Reston, VA 20191.
SEI/ASCE 32–01, Design and Construction of Frost Protected Shallow Foundations, 2001.

U.L. Publication. Underwriters Laboratories, 333 Pfingsten Road, Northbrook, Illinois 60062.
UL 181, Factory Made Air Ducts and Connectors, 1998.

U.S. Government Publications. U.S. Government Printing Office, Washington, DC 20402.
FEMA 85, Manufactured Home Installation in Flood Hazard Areas, 1985.
Title 24, Code of Federal Regulations, Part 3280, Manufactured Home Construction and Safety Standards.
Title 24, Code of Federal Regulations, Part 3282, Manufactured Home Procedural and Enforcement Regulations.
Title 44, Code of Federal Regulations, Part 59, General Provisions.
Title 44, Code of Federal Regulations, Part 60, Criteria for Land Management and Use.

§ 3285.5 Definitions.

The definitions contained in this section apply to the terms used in these Model Installation Standards. Where terms are not included, common usage of the terms apply. The Definitions are as follows:

Anchor assembly. Any device or other means designed to transfer home anchoring loads to the ground.

Anchoring equipment. Ties, straps, cables, turnbuckles, chains, and other approved components, including tensioning devices that are used to secure a manufactured home to anchor assemblies.

Anchoring system. A combination of anchoring equipment and anchor assemblies that will, when properly designed and installed, resist the uplift, overturning, and lateral forces on the manufactured home.

Approved. When used in connection with any material, appliance or construction, means complying with the requirements of the Department of Housing and Urban Development.

Arid region. An area subject to 15 inches or less of annual rainfall.

Base flood. The flood having a one percent chance of being equaled or exceeded in any given year.

Base flood elevation (BFE). The elevation of the base flood, including wave height, relative to the datum specified on a LAHJ's flood hazard map.

Comfort cooling certificate. A certificate permanently affixed to an interior surface of the home specifying the factory design and preparations for air conditioning the manufactured home.

Crossovers. Utility interconnections in multi-section homes that are located where the sections are joined. Crossover connections include heat ducting, electrical circuits, and water pipes, drain plumbing, and gas lines.

Design Approval Primary Inspection Agency (DAPIA). A State or private organization that has been accepted by the Secretary in accordance with the requirements of part 3282, subpart H of this chapter, which evaluates and approves or disapproves manufactured home designs and quality control procedures.

Diagonal tie. A tie intended to resist horizontal or shear forces, but which may resist vertical, uplift, and overturning forces.

Flood hazard area. The greater of either:

(1) The special flood hazard area shown on the flood insurance rate map; or

(2) The area subject to flooding during the design flood and shown on a LAHJ's flood hazard map, or otherwise legally designated.

Flood hazard map. A map delineating the flood hazard area and adopted by a LAHJ.

Footing. That portion of the support system that transmits loads directly to the soil.

Ground anchor. A specific anchoring assembly device designed to transfer home anchoring loads to the ground.

Installation instructions. DAPIA-approved instructions provided by the home manufacturer that accompany each new manufactured home and detail the home manufacturer requirements for support and anchoring systems, and other work completed at the installation site to comply with these Model Installation Standards and the Manufactured Home Construction and Safety Standards in 24 CFR part 3280.

Installation standards. Reasonable specifications for the installation of a new manufactured home, at the place of occupancy, to ensure proper siting, the joining of all sections of the home, and the installation of stabilization, support, or anchoring systems.

Labeled. A label, symbol, or other identifying mark of a nationally recognized testing laboratory, inspection agency, or other organization concerned with product evaluation that maintains periodic inspection of production of labeled equipment or materials, and by whose labeling is indicated compliance with nationally recognized standards or tests to determine suitable usage in a specified manner.

Listed or certified. Included in a list published by a nationally recognized testing laboratory, inspection agency, or other organization concerned with product evaluation that maintains periodic inspection of production of listed equipment or materials, and whose listing states either that the equipment or material meets nationally recognized standards or has been tested and found suitable for use in a specified manner.

Local authority having jurisdiction (LAHJ). The State, city, county, city and county, municipality, utility, or organization that has local responsibilities that must be complied with during the installation of a manufactured home and those local responsibilities are outside the coverage of the MHCSS or these Model Installation Standards.

Lowest floor. The floor of the lowest enclosed area of a manufactured home. An unfinished or flood resistant enclosure, used solely for vehicle parking, home access or limited storage, must not be considered the lowest floor, provided the enclosed area is not constructed so as to render the home in

violation of the flood-related provisions of this standard.

Manufactured home. A structure, transportable in one or more sections, which, in the traveling mode, is eight body feet or more in width or forty body feet or more in length, or, when erected on site, is three hundred twenty or more square feet, and which is built on a permanent chassis and designed to be used as a dwelling with or without a permanent foundation when connected to the required utilities, and includes the plumbing, heating, air-conditioning, and electrical systems contained therein. The term also includes any structure which meets all the requirements of this paragraph except the size requirements and with respect to which the manufacturer voluntarily files a certification pursuant to § 3282.13 of this chapter and complies with the installation standards established under this part and the construction and safety standards in part 3280 of this chapter; but such term does not include any self-propelled recreational vehicle.

Manufactured home gas supply connector. A listed connector designed for connecting the manufactured home to the gas supply source.

Manufactured home site. A designated parcel of land designed for the installation of one manufactured home for the exclusive use of the occupants of the home.

Pier. That portion of the support system between the footing and the manufactured home, exclusive of shims. Types of piers include, but are not limited to:

(1) Manufactured steel stands;

(2) Pressure-treated wood;

(3) Manufactured concrete stands;

(4) Concrete blocks; and

(5) Portions of foundation walls.

Ramada. Any freestanding roof or shade structure, installed or erected above a manufactured home or any portion thereof.

Secretary. The Secretary of Housing and Urban Development, or an official of HUD delegated the authority of the Secretary with respect to title VI of Pub. L. 93–383.

Skirting. A weather-resistant material used to enclose the perimeter, under the living area of the home, from the bottom of the manufactured home to grade.

Stabilizing devices. All components of the anchoring and support systems, such as piers, footings, ties, anchoring equipment, anchoring assemblies, or any other equipment, materials and methods of construction, that support and secure the manufactured home to the ground.

State. Each of the several States, the District of Columbia, the Commonwealth of Puerto Rico, Guam, the Virgin Islands, the Canal Zone, and American Samoa.

Support system. Pilings, columns, footings, piers, foundation walls, shims, and any combination thereof that, when properly installed, support the manufactured home.

Tie. Straps, cable, or securing devices used to connect the manufactured home to anchoring assemblies.

Ultimate load. The absolute maximum magnitude of load that a component or system can sustain, limited only by failure.

Utility connection. The connection of the manufactured home to utilities that include, but are not limited to, electricity, water, sewer, gas, or fuel oil.

Vertical tie. A tie intended to resist uplifting and overturning forces.

Working load. The maximum recommended load that may be exerted on a component or system. The ultimate load of a component or system divided by an appropriate factor of safety.

Subpart B—Pre-Installation Considerations

§ 3285.101 Installation of manufactured homes in flood hazard areas.

(a) *Definitions.* Except to the extent otherwise defined in subpart A, the terms used in this subpart are as defined in 44 CFR 59.1 of the National Flood Insurance Program (NFIP) regulations.

(b) *Applicability.* The provisions of this section apply to the initial installation of new manufactured homes located wholly or partly within the flood hazard area.

(c) *Pre-installation considerations.* Prior to the initial installation of a new manufactured home, the installer is responsible to determine whether the manufactured home site lies wholly or partly within a special flood hazard area as shown on the LAHJ's Flood Insurance Rate Map, Flood Boundary and Floodway Map, or Flood Hazard Boundary Map. If so located, the map and supporting studies adopted by the LAHJ should be used to determine the flood hazard zone and base flood elevation at the site.

(d) *General elevation and foundation requirements.* (1) *Methods and practices.* Manufactured homes located wholly or partly within special flood hazard areas must be installed using methods and practices that minimize flood damage during the base flood, in accordance with the LAHJ, 44 CFR 60.3(a) through (e), as applicable, and other provisions of 44 CFR referenced by those paragraphs.

(2) *Related guidance.* Refer to FEMA 85–85, Manufactured Home Installation in Flood Hazard Areas.

§ 3285.102 Design zone maps.

The design zone maps are those identified in part 3280 of this chapter.

(a) *Wind zone.* Manufactured homes must not be installed in a wind zone that exceeds the design wind loads for which the home has been designed as evidenced by the wind zone indicated on the home's data plate.

(b) *Roof load zone.* Manufactured homes must not be located in a roof load zone that exceeds the design roof load for which the home has been designed as evidenced by the roof load zone indicated on the home's data plate. Refer to § 3285.315 for Special Snow Load Conditions.

(c) *Thermal zone.* Manufactured homes must not be installed in a thermal zone that exceeds the thermal zone for which the home has been designed as evidenced by the thermal zone indicated on the heating/cooling certificate and insulation zone map. The manufacturer may provide the heating/cooling information and insulation zone map on the home's data plate.

§ 3285.103 Moving manufactured home to location.

Refer to § 3285.902 for considerations related to moving the manufactured home to the site of installation.

§ 3285.104 Permits, other alterations, and on-site structures.

Refer to § 3285.903 for considerations related to permitting, other alterations and on-site structures.

Subpart C—Site Preparation

§ 3285.201 Soil conditions.

To help prevent settling or sagging, the foundation must be constructed on firm, undisturbed soil or fill compacted to at least 90 percent of its maximum relative density. All organic material subject to decay, such as grass, roots, twigs, and wood scraps must be removed in areas where footings are to be placed.

§ 3285.202 Soil classifications and bearing capacity.

(a) The soil classification and bearing capacity of the soil must be determined before the foundation is constructed and anchored against the wind. The soil classification and bearing capacity must be determined by:

(1) *Soil tests.* Soil tests that are in accordance with generally accepted engineering practice; or

(2) *Soil records.* Soil records on file with the applicable LAHJ; or

(3) *Soil classifications and bearing capacities.* If the soil class or bearing capacity cannot be determined by test or soil records, but its type can be identified, the soil classification, allowable pressures, and torque values in the following table must be used.

Soil classification		Soil description	Allowable pressure (psf) [1]	Blow count ASTM D1586	Torque probe [3] value [4] (inch-pounds)
Classification No.	ASTM D2487 or D2488				
1		Rock or hard pan	4000+		
2	GW, GP, SW, SP, GM, SM.	Sandy gravel and gravel; very dense and/or cemented sands; course gravel/cobbles; preloaded silts, clays and coral.	2000	40+	([6])
3	GC, SC, ML, CL	Sand; silty sand; clayey sand; silty gravel; medium dense course sands; sandy gravel; and very stiff silt, sand clays.	1500	24–39	351–550
4A	CG, MH [2]	Loose to medium dense sands; firm to stiff clays and silts; alluvial fills.	1000	18–23	276–350
4B	CH, MH [2]	Loose sands; firm clays; alluvial fills	1000	12–17	175–275
5	OL, OH, PT	Uncompacted fill; peat; organic clays	([7])	0–11	([5])

Notes:

[1] The values provided in this table have not been adjusted for overburden pressure, embedment depth, water table height, or settlement problems.

[2] For soils classified as CH or MH, without either torque probe values or blow count test results, selected anchors must be rated for a 4B soil.

[3] The torque test probe is a device for measuring the torque value of soils to assist in evaluating the holding capacity of the soil in which the ground anchor is placed. The shaft must be of suitable length for the full depth of the ground anchor.

[4] The torque value is a measure of the load resistance provided by the soil when subject to the turning or twisting force of the probe.

[5] Less than 175.

[6] More than 550.

[7] Refer to 3285.202(b).

(b) If the soil appears to be composed of peat, organic clays, or uncompacted fill or appears to have unusual conditions, a registered professional geologist, registered professional engineer, or registered architect must be consulted and a report provided to determine the soil classification and maximum allowable soil bearing capacity.

§ 3285.203 Drainage.

(a) *Purpose.* Drainage must be provided that prevents water build-up under the home, shifting or settling of the foundation, dampness in the home, damage to siding and bottom board, buckling of walls and floors, and problems with the operation of doors and windows.

(b) The home site must be graded to permit water to drain from under the home. Refer to Figure 3285.203.

(c) All drainage must be diverted away from the home and must slope a minimum of one-half inch per foot away from the foundation for the first 10 feet. Where property lines, walls, slopes, or other physical conditions prohibit this slope, the site must be provided with drains or swales or otherwise graded to drain water away from the structure.

(d) *Sloped site considerations.* The home, where sited, must be protected from surface runoff from the surrounding area.

(e) Refer to § 3285.904 for drainage structures that may be used to drain surface runoff.

BILLING CODE 4210–27–P

Figure to § 3285.203 - Grading and drainage.

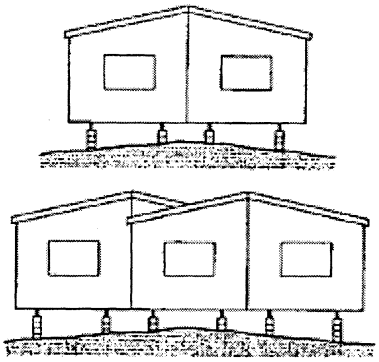

Crown and grade site to slope away from the home

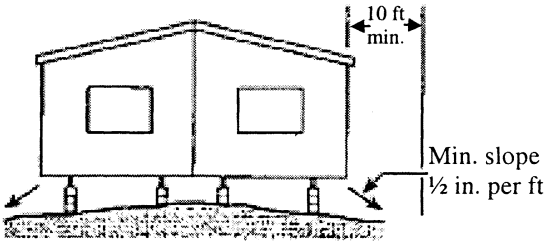

Home sites must be prepared so that there will be no depressions in which surface water may accumulate beneath the home. The area of the site covered by the manufactured home must be graded, sloped or designed to provide drainage from beneath the home or to the property line.

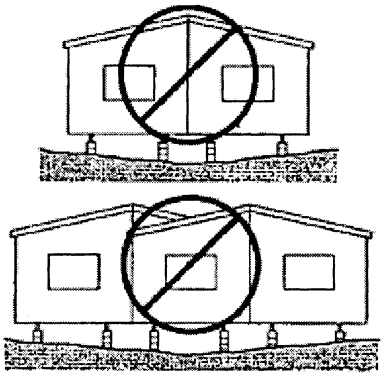

Do not grade site or set the home so that water collects beneath the home.

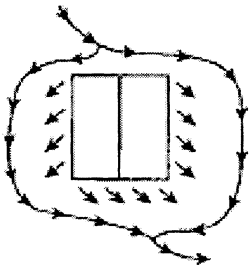

Natural drainage must be diverted around and away from the home.

BILLING CODE 4210–27–C

(f) *Gutters and downspouts.* When gutters and downspouts are installed, the runoff must be directed away from the home.

§ 3285.204 Ground moisture control.

(a) *Vapor retarder.* If the space under the home is to be enclosed with skirting or other material, a vapor retarder that keeps ground moisture out of the home must be installed except in arid regions with dry soil conditions (refer to § 3285.505).

(b) *Acceptable types of ground cover.* A minimum of six millimeter polyethylene sheeting or its equivalent must be used.

(c) *Proper installation.* (1) The entire area under the home, except for areas under open decks, porches, or recessed entries, must be covered with the vapor retarder as noted in § 3285.204(a) and must be overlapped at least 12 inches at all joints.

(2) The ground cover may be placed directly beneath footings, or otherwise installed around footers, anchors, and other obstructions where footings are permitted at-grade.

(3) Minor voids or tears in the vapor retarder do not require repair.

Subpart D—Foundations

§ 3285.301 General.

(a) Foundations for manufactured home installations must be designed and constructed in accordance with this subpart and must be based on site conditions, home design features, and the loads the home was designed to withstand as shown on the home's data plate.

(b) Foundation systems that are not pier and footing type configurations are permissible provided they are verified by engineering data and designed in accordance with § 3285.301(d) consistent with the design loads of the Manufactured Home Construction and Safety Standards. Pier and footing installations proposing different detailed specifications other than the pier and footing requirements provided in subpart D (such as block size, section width, loads, and spacing) are also permissible provided they are verified by engineering data and comply with § 3285.301(d) consistent with the design loads of the Manufactured Home Construction and Safety Standards. Several Tables and specifications in this subpart apply only to pier and footing configurations and may not apply to other types of foundation systems.

(c) Details, plans, and test data must be designed and certified by a registered professional engineer or registered architect, and must not take the home out of compliance with the MHCSS.

(d) *Alternative foundation systems.* Alternative foundation systems or designs are permitted by § 3285.301(d)(1) or § 3285.301(d)(2).

(1) Systems or designs must be manufactured and installed in accordance with their listings by a nationally recognized testing agency based on a nationally recognized testing protocol; or

(2) System designs must be prepared by a registered professional engineer or a registered architect in accordance with acceptable engineering practice.

§ 3285.302 Flood hazard areas.

In flood hazard areas, the piers and support systems must be capable of resisting loads associated with design flood and wind events (refer to § 3285.101).

§ 3285.303 Piers.

(a) *General.* The piers used must be capable of transmitting the vertical live and dead loads to the footings or foundation below.

(b) *Acceptable piers—materials specification.* (1) Piers are permitted to be concrete blocks, pressure-treated wood having 0.60 pounds per cubic foot (pcf) retention in accordance with § 3285.312(b)(2), or adjustable metal or concrete piers.

(2) Manufactured piers must be listed or labeled for the required vertical load capacity, and where required by design, for the appropriate horizontal load capacity.

(c) *Design requirements.* (1) *Load-bearing capacity.* The load that each pier must carry depends on such factors as the dimensions of the home, the design dead and live loads, the spacing of the piers, and the way the piers are used to support the home.

(2) Center beam/mating wall support must be required for multi-section homes and designs must be consistent with Tables 2 and 3 of this section and Figures A, B, and C to § 3285.310.

(d) *Pier loads.* (1) Design support layout configurations, poured footing sizes for the pier loads, pier spacing, and soil bearing capacities and support conditions must be consistent with Tables 1, 2, and 3 of this section, and Figure C to § 3285.312.

BILLING CODE 4210–27–P

Table 1 to § 3285.303 – Frame Blocking Only/Perimeter Support Not Required Except At Openings.

16 in. × 16 in. Concrete Footing Layouts (Refer to Figure C of § 3285.312)									
Pier Spacing	Roof Live Load (psf)	Location	Load (lb)	Allowable Soil Pressure					
				1000 psf	1500 psf	2000 psf	2500 psf	3000 psf	4000 psf
4 ft 0 in.	20	Frame	2900	2	2	**1**	**1**	**1**	**1**
	30	Frame	3300	2	2	**1**	**1**	**1**	**1**
	40	Frame	3600	3	2	2	**1**	**1**	**1**
6 ft 0 in.	20	Frame	4200	3	2	2	**1**	**1**	**1**
	30	Frame	4700	3	2	2	2	**1**	**1**
	40	Frame	5200	3	3	**2**	**2**	**1**	**1**
8 ft 0 in.	20	Frame	5500	4	3	**2**	**2**	**2**	**1**
	30	Frame	6200	4	3	**2**	**2**	**2**	**1**
	40	Frame	6900	4	3	**2**	**2**	**2**	**1**
10 ft 0 in.	20	Frame	6800	4	3	**2**	**2**	**2**	**1**
	30	Frame	7600	6	3	3	**2**	**2**	**2**
	40	Frame	8500	6	4	**3**	**3**	**2**	**2**

Notes:

1. Refer to § 3285.312(d) for poured footing design by using the noted loads.

2. Refer to Figure C of § 3285.312 for 16 in. × 16 in. footing pyramids layout designs. Refer to 3285.312(b) for minimum footing thickness; **shaded areas indicate minimum 8 in. thickness**.

3. Table based on the following design assumptions: maximum 16 ft. nominal section width (15 ft actual width), 12" eave, 10" I-beam size, 300 lb. pier dead load, 10 psf roof dead load, 6 psf floor dead load, 35 plf wall dead load, and 10 plf chassis dead load.

4. Interpolation for other pier spacing is permitted.

Table 2 to § 3285.303 – Frame Plus Perimeter Blocking/Perimeter Blocking Required.

16 in. × 16 in. Concrete Footing Layouts (Refer to Figure C of § 3285.312)									
Maximum Pier Spacing	Roof Live Load (psf)	Location	Load (lb)	Allowable Soil Pressure					
				1000 psf	1500 psf	2000 psf	2500 psf	3000 psf	4000 psf
4 ft 0 in.	20	Frame	1,400	1	1	1	1	1	1
		Perimeter	1,900	2	1	1	1	1	1
		Mating	3,200	2	2	**1**	**1**	**1**	**1**
	30	Frame	1,400	1	1	1	1	1	1
		Perimeter	2,300	2	1	1	1	1	1
		Mating	3,800	3	2	2	**1**	**1**	**1**
	40	Frame	1,400	1	1	1	1	1	1
		Perimeter	2,600	2	1	1	1	1	1
		Mating	4,400	3	2	2	1	1	1
6 ft 0 in.	20	Frame	1,900	2	1	1	1	1	1
		Perimeter	2,700	2	2	**1**	**1**	**1**	**1**
		Mating	4,700	3	2	2	2	**1**	**1**
	30	Frame	1,900	2	1	1	1	1	1
		Perimeter	3,200	3	2	**1**	**1**	**1**	**1**
		Mating	5,600	4	3	**2**	**2**	**2**	**1**
	40	Frame	1,900	2	1	1	1	1	1
		Perimeter	3,700	3	2	**2**	**1**	**1**	**1**
		Mating	6,500	4	3	**2**	**2**	**2**	**1**

8 ft 0 in.	20	Frame	2,400	2	1	1	1	1	1
		Perimeter	3,500	2	2	**1**	**1**	**1**	**1**
		Mating	6,100	4	3	**2**	**2**	**2**	**1**
	30	Frame	2,400	2	1	1	1	1	1
		Perimeter	4,200	3	2	2	**1**	**1**	**1**
		Mating	7,300	6	3	3	**2**	**2**	**2**
	40	Frame	2,400	2	1	1	1	1	1
		Perimeter	4,800	3	2	2	2	**1**	**1**
		Mating	8,500	6	4	**3**	**3**	**2**	**2**
10 ft 0 in.	20	Frame	2,900	2	2	1	**1**	**1**	**1**
		Perimeter	4,300	3	2	2	**1**	**1**	**1**
		Mating	7,600	6	3	3	**2**	**2**	**2**
	30	Frame	2,900	2	2	**1**	**1**	**1**	**1**
		Perimeter	5,100	4	3	**2**	**2**	**1**	**1**
		Mating	9,100	6	4	**3**	**3**	**2**	**2**
	40	Frame	2,900	2	2	**1**	**1**	**1**	**1**
		Perimeter	6,000	4	3	**2**	**2**	**2**	**1**
		Mating	10,600	8	6	**4**	**3**	**3**	**2**

Notes:

1. Refer to § 3285.312(d) for poured footing design by using the noted loads.

2. Refer to Figure C of § 3285.312 for 16 in. × 16 in. footing pyramids layout designs. Refer to 3285.312(b) for minimum footing thickness; **shaded areas indicate minimum 8 in. thickness**.

3. Mating wall perimeter piers and footings only required under full height mating walls supporting roof loads. Refer to Figures A and B of § 3285.310.

4. Table based on the following design assumptions: maximum 16 ft. nominal section width (15 ft actual width), 12" eave, 10" I-beam size, 300 lb. pier dead load, 10 psf roof dead load, 6 psf floor dead load, 35 plf wall dead load, and 10 plf chassis dead load.

5. Interpolation for other pier spacing is permitted.

Table 3 to § 3285.303 – Ridge Beam Span Footing Capacity.

16 in. × 16 in. Concrete Footing Layouts (Refer to Figure C of § 3285.312)								
Mating Wall Opening (ft)	Roof Live Load (psf)	Pier and Footing Load (lb)	Allowable Soil Pressure					
			1000 psf	1500 psf	2000 psf	2500 psf	3000 psf	4000 psf
5	20	1,200	1	1	1	1	1	1
	30	1,600	1	1	1	1	1	1
	40	1,900	2	1	1	1	1	1
10	20	2,300	2	1	1	1	1	1
	30	3,100	2	2	1	1	1	1
	40	3,800	3	2	2	1	1	1
15	20	3,500	2	2	1	1	1	1
	30	4,700	3	2	2	2	1	1
	40	5,800	4	3	2	2	1	1
20	20	4,700	3	2	2	2	1	1
	30	6,200	4	3	2	2	2	1
	40	7,500	6	3	3	2	2	2
25	20	5,800	4	3	2	2	2	1
	30	7,800	6	3	3	2	2	2
	40	9,700	6	4	3	3	2	2
30	20	7,000	4	3	2	2	2	1
	30	9,300	6	4	3	3	2	2
	40	11,600	8	6	4	3	3	2
35	20	8,100	6	4	3	2	2	2
	30	10,900	8	6	4	3	3	2
	40	13,600	8	6	4	4	3	2

Notes:

1. Refer to § 3285.312(d) for poured footing design by using the noted loads.

2. Refer to Figure C of § 3285.312 for 16 in.×16 in. footing pyramids layout designs. Refer to § 3285.312(b) for minimum footing thickness; shaded areas indicate minimum 8 in. thickness.

3. Table based on the following design assumptions: maximum 16 ft. nominal section width (15 ft actual width), 10" I-beam size, 300 lb. pier dead load, 10 psf roof dead load, 6 psf floor dead load, 35 plf wall dead load, and 10 plf chassis dead load.

4. Loads listed are maximum column loads for both sections.

5. Interpolation for pier and column loads is permitted for mate-line openings between those listed.

BILLING CODE 4210–27–C

(2) Manufactured piers must be rated at least to the loads required to safely support the dead and live loads as required by § 3285.301 and installation instructions must be formatted consistent with Tables 1, 2, and 3 of this section. Locally constructed piers must also be designed to transmit these loads safely as required by § 3285.301.

§ 3285.304 Configuration.

(a) *Concrete blocks.* (1) Concrete block piers must be installed in accordance with Figures A and B of § 3285.306.

(2) Load-bearing (not decorative) concrete blocks must have nominal dimensions of at least 8 inches × 8 inches × 16 inches.

(3) The concrete blocks must be stacked with their hollow cells aligned vertically.

(4) When piers are constructed of blocks stacked side by side, each layer must be at right angles to the preceding one, as shown in Figure B of §3285.306.

(b) *Caps.* (1) Structural loads must be evenly distributed across capped hollow block piers, as shown in Figures A and B of §3285.306.

(2) Caps must be of solid masonry of at least 4 inches nominal thickness, of dimensional lumber at least 2 inches nominal thickness, or be of steel or other listed materials.

(3) All caps must be of the same length and width as the piers on which they rest.

(4) When split caps are used on double stacked blocks, the caps must be installed with the long dimension across the joint in the blocks below.

(c) *Gaps.* When gaps between the bottom of the supported beam and the foundation support system occur during installation, any combination of the following applies.

(1) Nominal 4 inches × 6 inches shims are permitted to be used to level the home and fill any gaps between the base of the I-beam and the top of the pier cap;

(2) Shims must be used in pairs as shown in Figures A and B of §3285.306, and shims must be driven in tightly so that they do not occupy more than one inch of vertical height; and

(3) Wood plates no thicker than 2 inches must be used to fill in remaining vertical gaps.

(d) *Manufactured pier heights.* Manufactured pier heights must be selected so that the adjustable risers do not extend more than 2 inches when finally positioned.

§ 3285.305 Clearance under homes.

(a) A minimum clearance of 12 inches must be maintained beneath the lowest member of the main frame (I-beam or channel beam) in the area of utility connections.

(b) No more than 25 percent of the lowest member of the main frame of the home may be less than 12 inches above grade.

§ 3285.306 Design procedures for concrete block piers.

(a) *Frame piers less than 36 inches high.* (1) Frame piers less than 36 inches high are permitted to be constructed of single, open, or closed-cell concrete blocks, 8 inches × 8 inches × 16 inches, when the design capacity of the block is not exceeded.

(2) The frame piers must be installed so that the long sides are at right angles to the supported I-beam, as shown in Figure A of this section.

(3) Open cells must be positioned at right angles to the footings.

(4) Horizontal offsets must not exceed one-half inch. top to bottom.

(5) Mortar is not required unless specified in the manufacturers installation instructions or required by a registered professional engineer or registered architect.

(b) *Frame piers 36 inches to 80 inches high and corner piers.* All frame piers between 36 inches and 80 inches high and all corner piers over three blocks high must be constructed out of double, interlocked concrete blocks as shown in Figure B of this section, when the design capacity of the block is not exceeded. Mortar is required for concrete block piers unless otherwise specified in the manufacturer installation instructions.

BILLING CODE 4210–27–P

Figure A to § 3285.306 - Typical Footing and Pier Installation, Single Concrete Block.

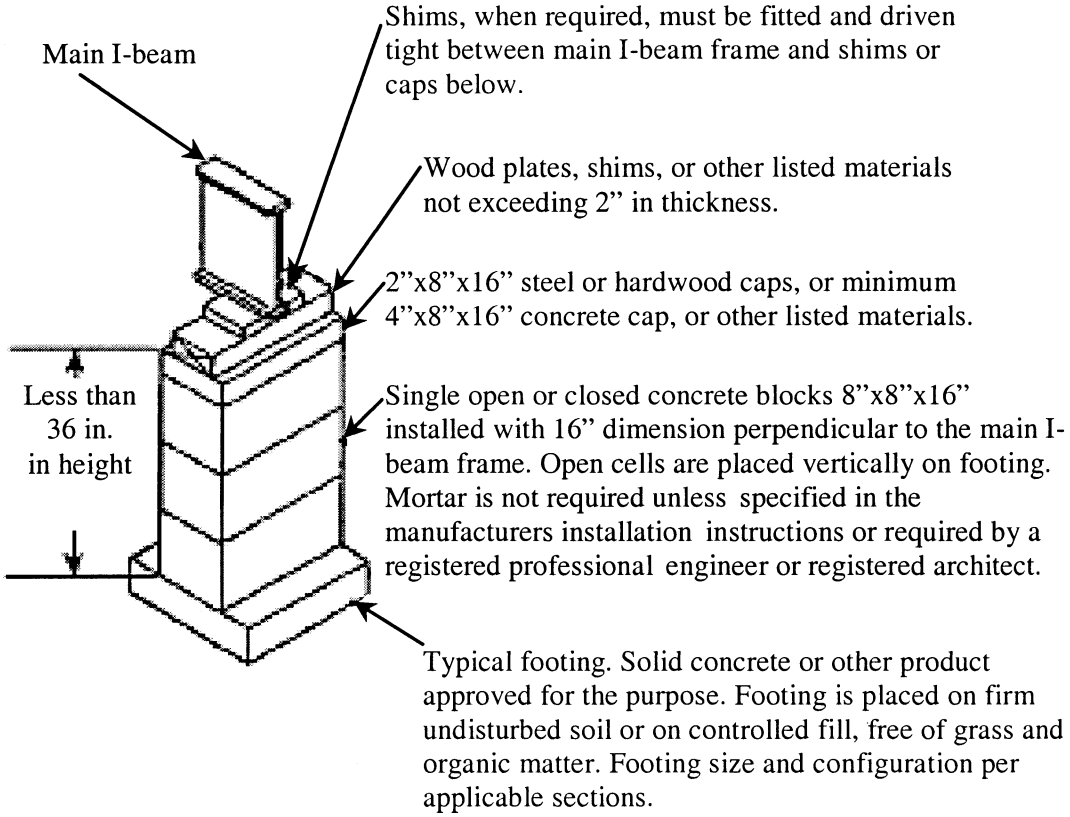

BILLING CODE 4210–27–C

(c) *All piers over 80 inches high.* Piers over 80 inches high must be designed by a registered professional engineer or registered architect in accordance with acceptable engineering practice. Mortar is required for concrete block piers unless otherwise specified in the manufacturer installation instructions.

Figure B to § 3285.306 - Typical Footing and Pier Installation, Double Concrete Block.

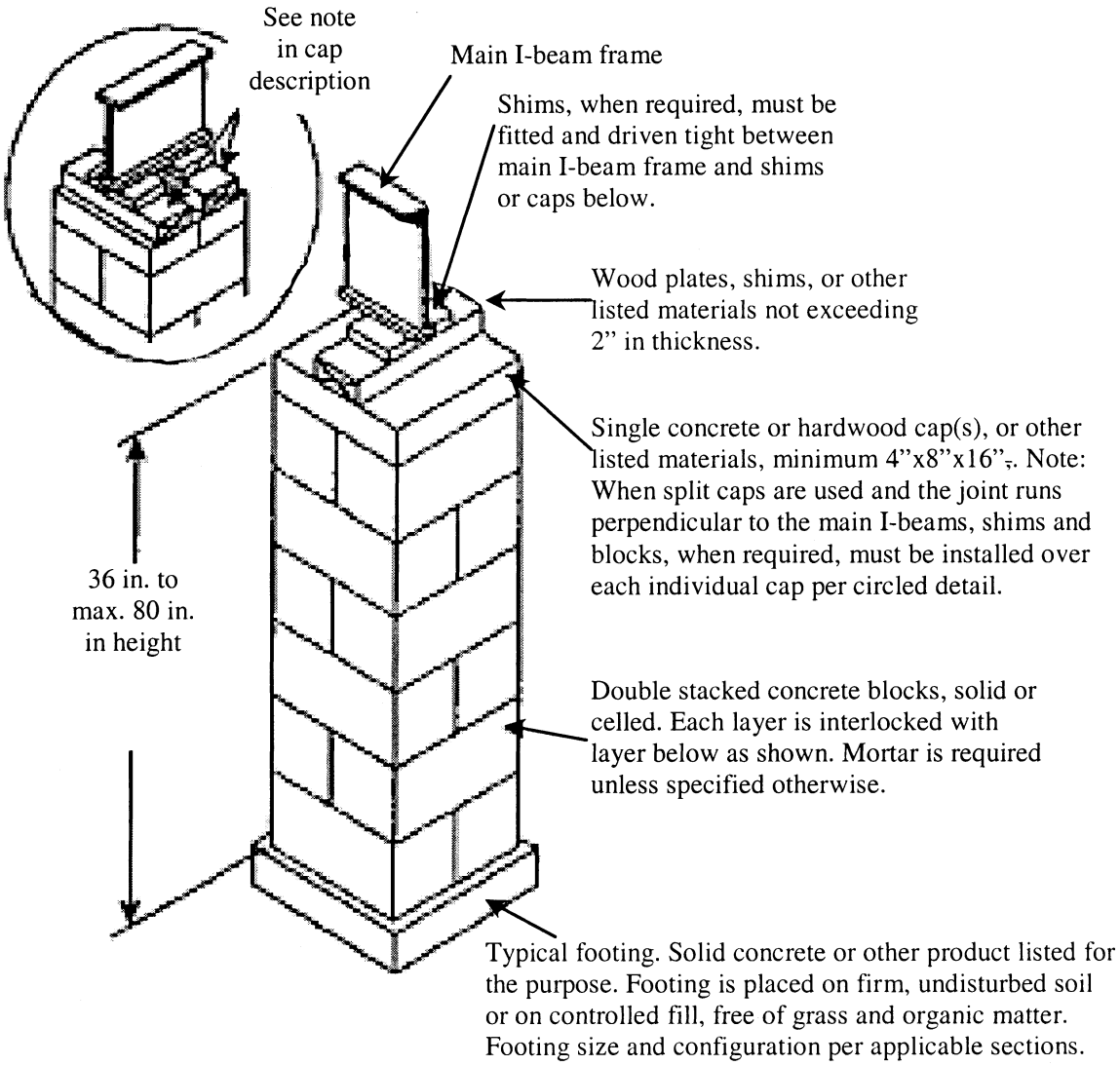

§ 3285.307 Perimeter support piers.

(a) Piers required at mate-line supports, perimeter piers, and piers at exterior wall openings are permitted to be constructed of single open-or closed-cell concrete blocks, 8 inches × 8 inches × 16 inches, to a maximum height of 54 inches as shown in Figure A to §3285.306, when the design capacity of the block is not exceeded.

(b) Piers used for perimeter support must be installed with the long dimension parallel to the perimeter rail.

§ 3285.308 Manufactured piers.

Manufactured piers must be listed and labeled and installed to the pier manufacturer installation instructions. Refer to § 3285.303(d)(2).

§ 3285.309 Elevated homes.

When more than one-fourth of the area of a home is installed so that the bottoms of the main frame members are more than 67 inches above the top of the footing, the home stabilizing devices must be designed by a registered professional engineer or registered architect in accordance with acceptable engineering practice.

§ 3285.310 Pier location and spacing.

(a) The location and spacing of piers depends upon the dimensions of the home, the live and dead loads, the type of construction (single-or multi-section), I-beam size, soil bearing capacity, footing size, and such other factors as the location of doors or other openings.

(b) Mate-line and column pier supports must be in accordance with this subpart and consistent with Figures A through C of this section.

Figure A to § 3285.310 - Typical Mate-Line Column Pier and Mating Wall Support When Frame Only Blocking is Required.

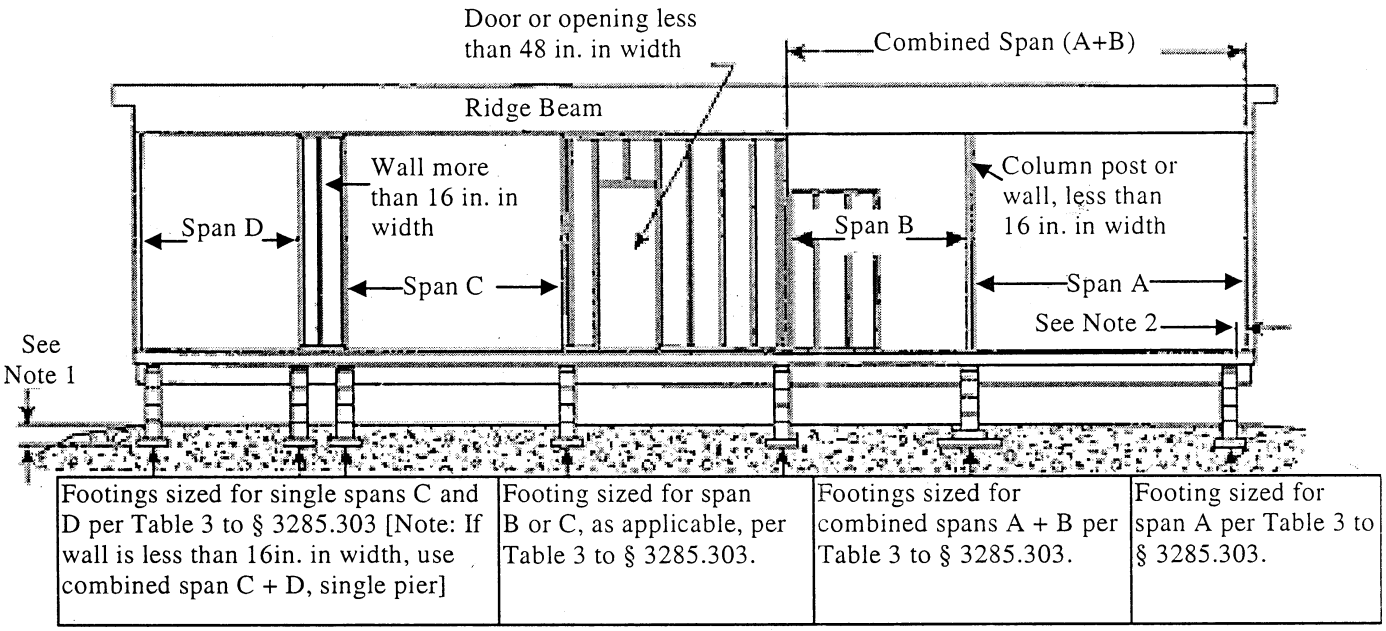

Footings sized for single spans C and D per Table 3 to § 3285.303 [Note: If wall is less than 16in. in width, use combined span C + D, single pier]	Footing sized for span B or C, as applicable, per Table 3 to § 3285.303.	Footings sized for combined spans A + B per Table 3 to § 3285.303.	Footing sized for span A per Table 3 to § 3285.303.

Notes:

1. Bottom of footings must extend below frost depth.

2. Piers may be offset up to 6 in. in either direction along the supported members to allow for plumbing, electrical, mechanical, equipment, crawlspaces, or other devices.

3. Single stack concrete block pier loads must not exceed 10,000 lbs.

4. Prefabricated piers must not exceed their approved or listed maximum vertical or horizontal design loads.

5. When a full-height mating wall does not support the ridge beam, this area is considered an open span – Span B.

Figure B to § 3285.310 - Typical Mate-Line Column Pier and Mating Wall Support When Perimeter Blocking is Required.

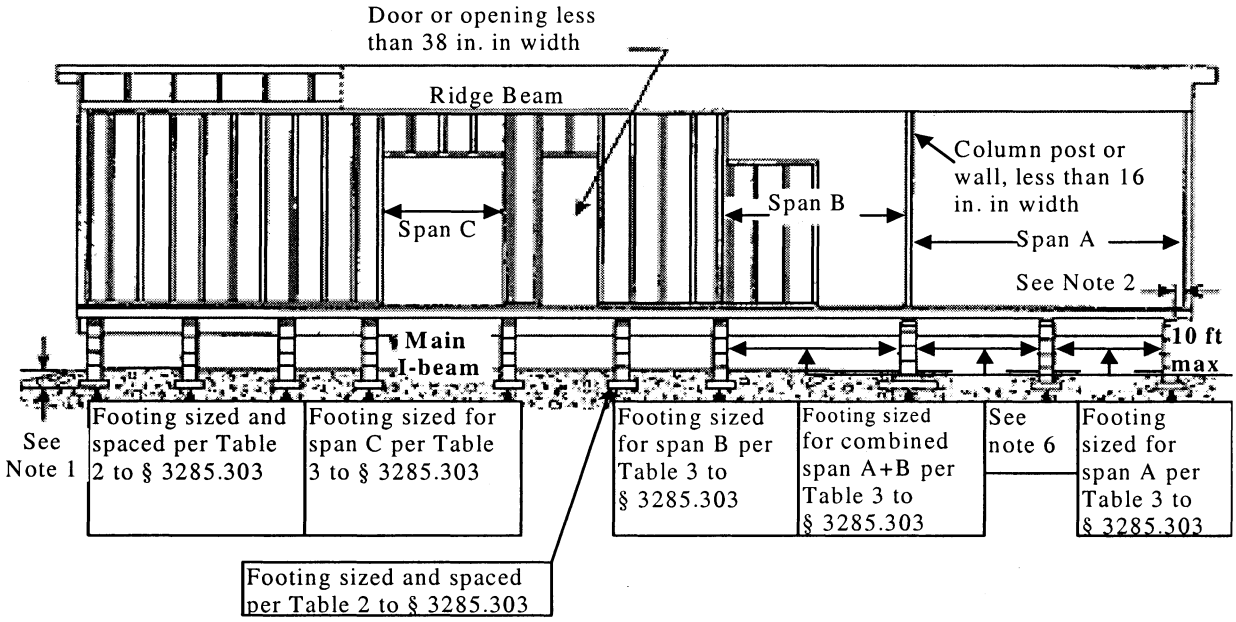

Notes:

1. Bottom of footings must be below frost depth.

2. Piers may be offset 6 in. in either direction along supported members to allow for plumbing electrical, mechanical equipment, crawlspaces, or other devices.

3. Single stack concrete block pier loads must not exceed 10,000 lbs.

4. Piers are not required at openings in mating wall less than 38 in.

5. When a full-height mating wall does not support the ridge beam, this area is considered an open span – Span B.

6. In areas where the open span is greater than 10 ft., intermediate piers and footings must be placed at maximum 10 ft. on center.

7. Prefabricated piers must not exceed their approved or listed maximum horizontal or vertical design loads.

8. Column piers are in addition to piers required under full-height mating walls.

Figure C to § 3285.310 - Typical Mate-Line Column and Piers.

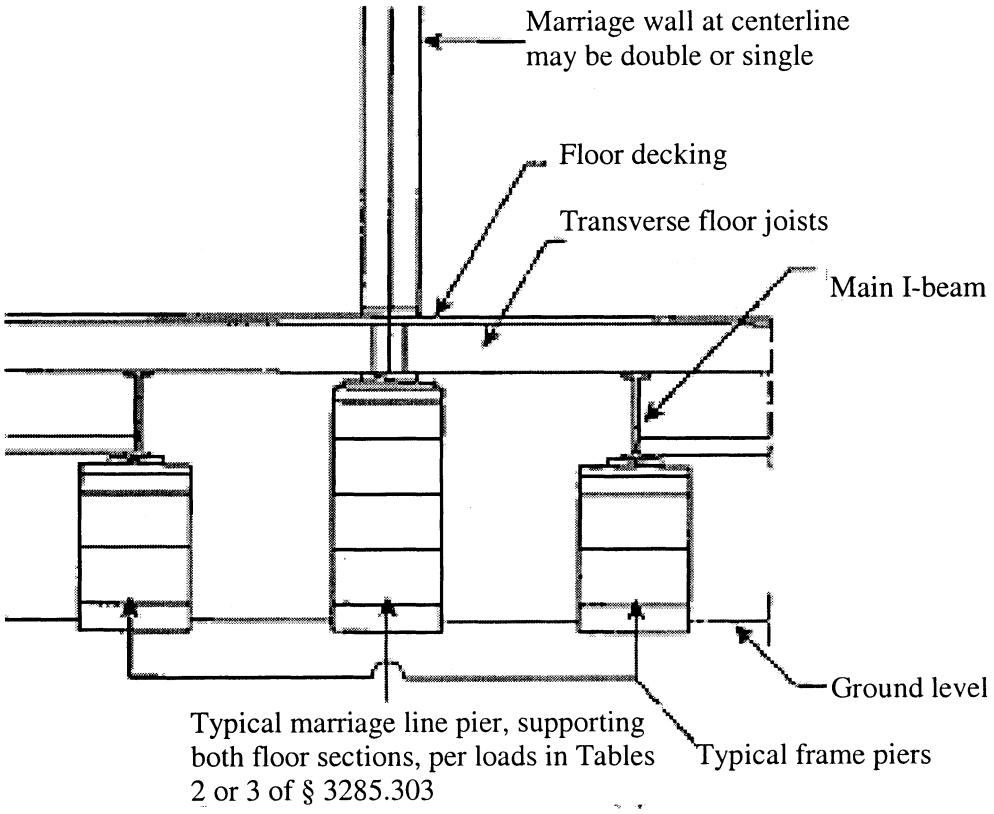

Notes:

1. Mate-line column support piers are installed with the long dimension of the concrete block perpendicular to the rim joists.

2. Pier and footing designed to support both floor sections. Loads as listed in Table 3 of § 3285.303 are total column loads for both sections.

BILLING CODE 4210–27–C

(c) Piers supporting the frame must be no more than 24 inches from both ends and not more than 120 inches center to center under the main rails.

(d) Pier support locations. Pier support locations and spacing must be presented to be consistent with Figures A and B of §3285.312, as applicable, unless alternative designs are provided by a professional engineer or registered architect in accordance with acceptable engineering practice.

§ 3285.311 Required perimeter supports.

(a) Pier supports must be placed on both sides of side wall exterior doors and any other side wall openings greater than 48 inches (such as entry and sliding glass doors), and under porch posts, factory installed fireplaces, and wood stoves).

(b) Other perimeter supports must be required in accordance with Table 1, 2, or 3 of § 3285.303, as applicable.

§ 3285.312 Footings.

(a) Footing materials must conform to § 3285.312 and other materials approved for footings may be permitted if they provide equal load-bearing capacity and resistance to decay. Footings must be placed on undisturbed soil or fill compacted to 90 percent of maximum relative density. A footing must support every pier.

Figure A to § 3285.312 - Typical Blocking Diagram for Single Section Homes

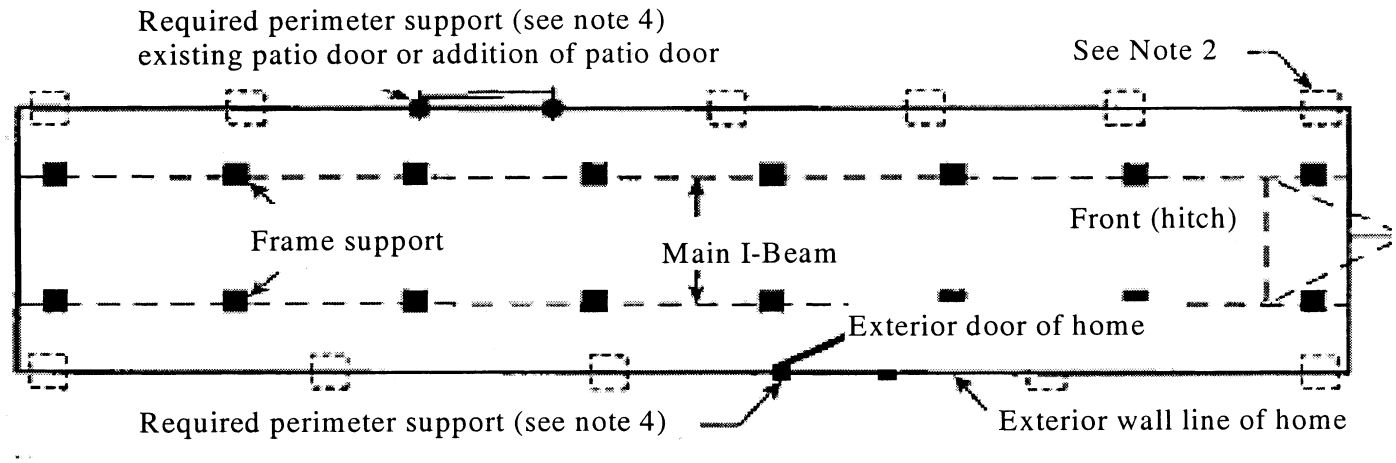

Notes:

1. Refer to Table 1 of § 3285.303 for pier and footing requirements when frame blocking only is used.

2. In addition to blocking required by § 3285.311, refer to Table 2 of § 3285.303.

3. End piers under main I-beams may be set back a maximum of 24 in. as measured from the outside edge of the floor to the center of the pier.

4. Place piers on both sides of entry doors; at any other openings greater than 48 in. width, such as patio or atrium doors; and under porch posts, factory installed fireplaces, and wood stoves.

(b) *Acceptable types of footings.* (1) *Concrete.* Footings must are permitted to consist of either of the following:

(i) 4-inch nominal precast concrete pads meeting or exceeding ASTM C 90–02, Standard Specification for Load Bearing Concrete Masonry Units, without reinforcement, with at least a 28-day compressive strength of 4,000 pounds per square inch (psi); and

(ii) 6-inch nominal poured-in-place concrete pads, slabs, or ribbons with at least a 28-day compressive strength of 3,000 pounds per square inch (psi).

Figure B to § 3285.312 - Typical Blocking Diagram for Single Multi-section Home.

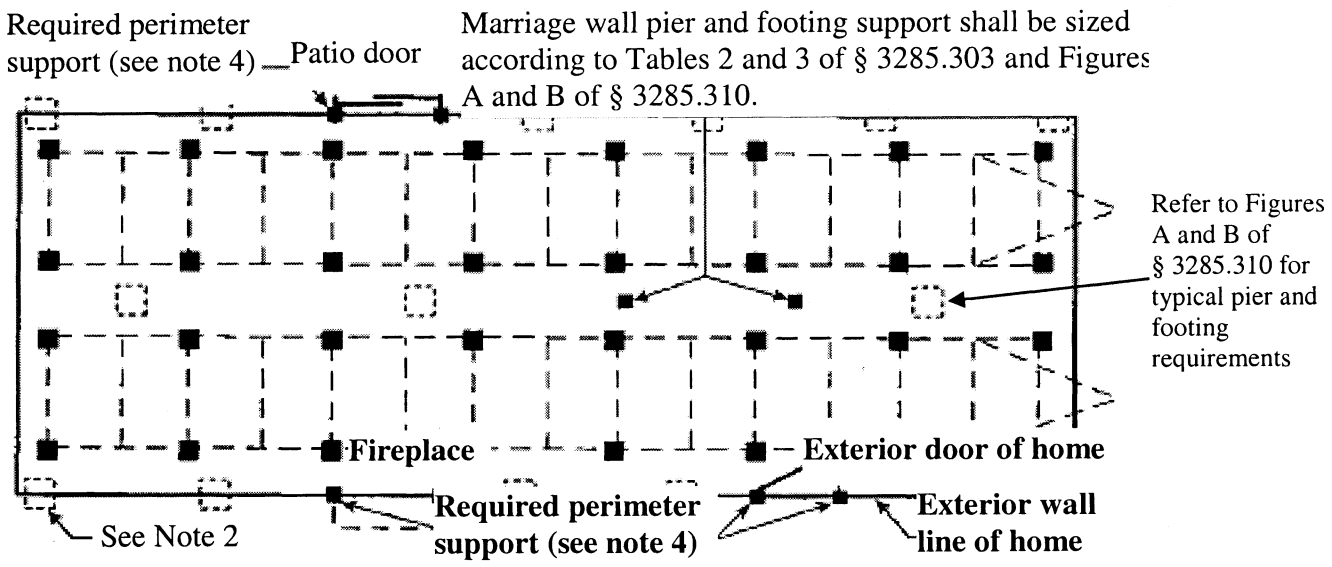

Notes:

1. Refer to Table 1 of § 3285.303 for pier and footing requirements when frame blocking only is used.

2. In addition to blocking required by § 3285.311, refer to Tables 2 and 3 of § 3285.303.

3. End piers under main I-beams may be set back a maximum of 24 in. as measured from the outside edge of the floor to the center of the pier.

5. When an end pier under the mate-line also serves as a column pier, it may be set back a maximum of 6 in. as measured from the inside edge of the exterior wall to the center of the pier.

4. Place piers on both sides of entry doors; at any other openings greater than 48 in. width, such as patio or atrium doors; and under porch posts, factory installed fireplaces, and wood stoves.

BILLING CODE 4210–27–C

(2) *Pressure-treated permanent wood.* (i) A minimum of two layers of nominal 2-inch thick pressure-treated wood having 0.60-pcf (9.6 kg/m^3) retention in accordance with AWPA C2–02, Standard for the Preservative Treatment of Lumber, Timber, Bridge Ties and Mine Ties, by Pressure Processes, or AWPA C9–00, Plywood—Preservative Treatment by Pressure Processes, with the long dimensions of the second layer placed under the pier and perpendicular to that of the first layer, must be used.

(ii) Pressure-treated wood footings must be pressure treated on all six sides and is permitted to consist of nominal 2 inch thick pressure-treated wood in accordance with AWPA C2–02, or a single layer of a minimum thickness of three quarter inch and a maximum size of 16 inches × 16 inches, or, for larger sizes, two pieces of nominal three-quarter inch thick plywood (APA-rated sheathing, exposure 1, PS1) pressure-treated for soil contact in accordance with AWPA C9–00.

(3) *ABS footing pads.* (i) ABS footing pads are permitted as long as pad installation is in accordance with the pad manufacturer installation instructions.

(ii) ABS footing pads must be listed or labeled for the required load capacity.

(c) *Placement in freezing climates.* (1) *Conventional footings.* Footings placed in freezing climates must be placed below the frost line depth for the site unless an insulated foundation or monolithic slab is used (refer to §§ 3285.312(c)(2) and 3285.312(c)(3)). When the frost line depth is not available from the LAHJ, a registered professional engineer, registered architect, or registered geologist must be consulted to determine the required frost line depth for the manufactured home site.

(2) *Monolithic slab systems.* (i) When properly designed by a registered professional engineer or registered architect in accordance with acceptable engineering practice and ASCE/SEI 32–01, a monolithic slab is permitted above the frost line.

(ii) The design must accommodate anchorage requirements in § 3285.401.

(3) *Insulated foundations.* When properly designed by a registered professional engineer or registered architect in accordance with acceptable engineering practice and ASCE/SEI 32–01, an insulated foundation is permitted above the frost line.

(d) *Sizing of footings.* The sizing of footings depends on the load-bearing capacity of both the piers and the soil. Refer to § 3285.303 and Figures C and E of this section for footing sizes.

BILLING CODE 4210–27–P

Figure C to § 3285.312 - Footing Configuration Layout Designs.

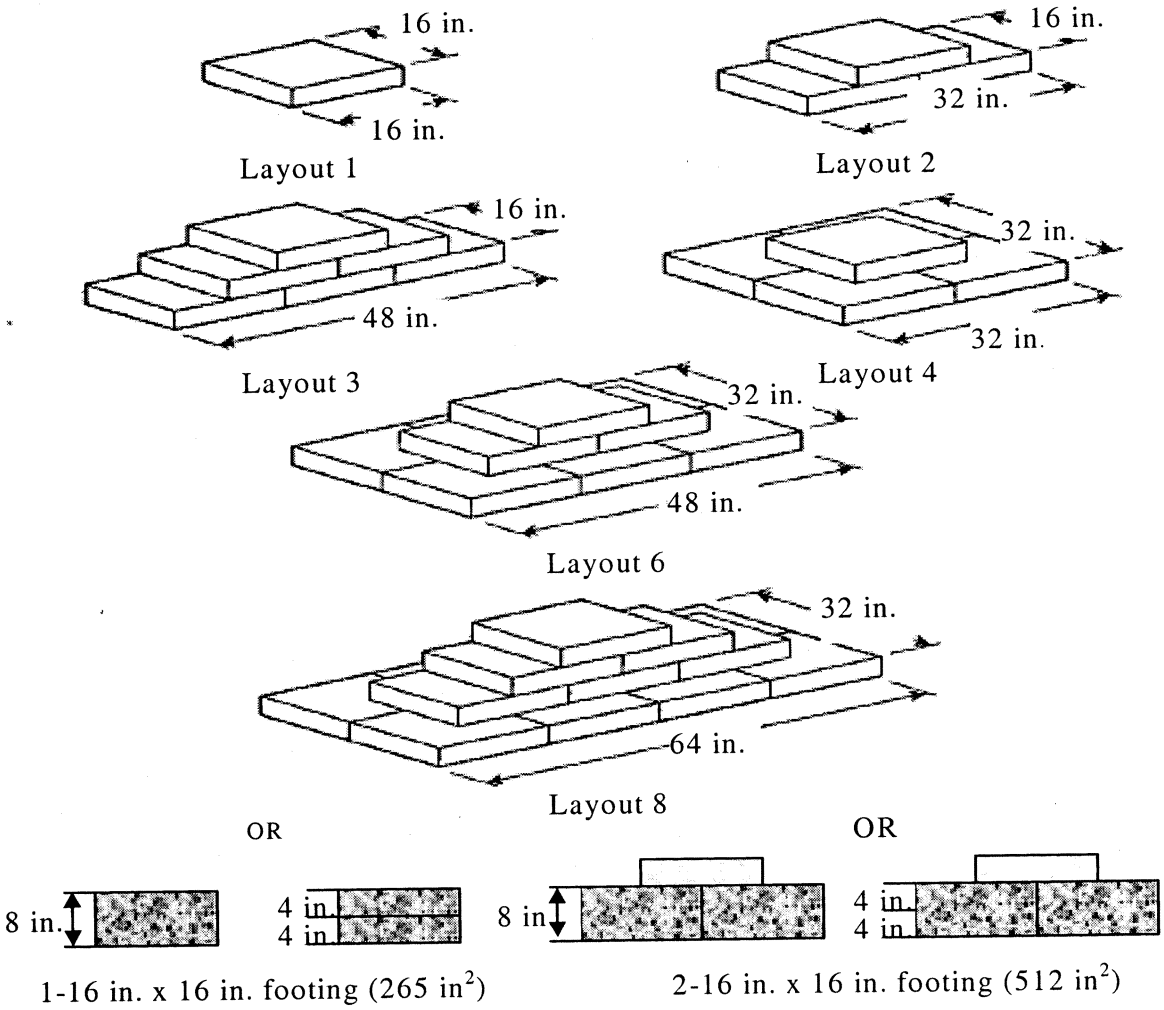

Notes:

1. Typical pier pad: 16”x16”x4” thick precast concrete.

2. The pad thickness for table entries with shade is minimum 8”, or two 4” pads one on top of the other.

3. Fc’ = 4000 psi min.

4. The layout numbers identified in this figure correspond to the number of pads at the base of the footing.

BILLING CODE 4210–27–C

(e) The size and capacity for unreinforced cast-in-place footings are as follows:

Soil capacity (psf)	Minimum footing size (in.)	8 in. x 16 in. pier		16 in. x 16 in. pier	
		Maximum footing capacity (lb)	Unreinforced cast-in-place minimum thickness (in.)	Maximun footing capacity (lb)	Unreinforced case-in-place minimum thickness (in.)
1,000	16 x 16	1,600	6	1,600	6
	20 x 20	2,600	6	2,600	6
	24 x 24	3,700	6	3,700	6
	30 x 30	5,600	8	5,800	6
	36 x 36	7,900	10	8,100	8
	42 x 42	[4] 10,100	12	10,700	10
	48 x 48	[4] 13,000	15	13,600	12
1,500	16 x 16	2,500	6	2,500	6
	20 x 20	4,000	6	4,000	6
	24 x 24	5,600	8	5,700	6
	30 x 30	8,600	10	8,900	6
	36 x 36	[4] 12,200	12	12,600	8
	42 x 42	[4] 16,100	15	16,500	12
	48 x 48	[4] 20,400	18	[4] 21,000	15
2,000	16 x 16	3,400	6	3,400	6
	20 x 20	5,300	6	5,300	6
	24 x 24	7,600	8	7,700	6
	30 x 30	[1] 11,600	10	11,900	8
	36 x 36	[4] 16,300	15	16,900	10
	42 x 42	[4] 21,700	18	[4] 22,700	12
2,500	16 x 16	4,300	6	4,300	6
	20 x 20	6,700	6	6,700	6
	24 x 24	9,600	8	9,700	6
	30 x 30	[4] 14,700	12	15,000	8
	36 x 36	[4] 20,800	15	[4] 21,400	10
3,000	16 x 16	5,200	6	5,200	6
	20 x 20	8,100	8	8,100	6
	24 x 24	[4] 11,500	10	11,700	6
	30 x 30	[4] 17,800	12	18,100	8
	36 x 36	[4] 25,000	18	[4] 25,700	12
4,000	16 x 16	7,000	6	7,000	6
	20 x 20	10,800	8	10,900	6
	24 x 24	[4] 15,500	10	15,600	8
	30 x 30	[4] 23,800	15	[4] 24,200	10

Notes:

[1] The footing sizes shown are for square pads and are based on the area (in.^{2}), shear, and bending required for the loads shown. Other configurations, such as rectangular or circular configurations, can be used, provided the area and depth is equal to or greater than the area and depth of the square footing shown in the table and the distance from the edge of the pier to the edge of the footing is not less than the thickness of the footing.

[2] The 6 in. cast-in-place values can be used for 4 in. unreinforced precast concrete footings.

[3] The capacity values listed have been reduced by the dead load of the concrete footing.

[4] Concrete block piers must not exceed their design capacity.

§ 3285.313 Combination systems.

Support systems that combine both load-bearing capacity and uplift resistance must also be sized and designed for all applicable design loads.

§ 3285.314 Permanent foundations.

(a) Nothing in these Model Installation Standards shall limit the authority of State and local governments to impose requirements for the placement of a manufactured home on a permanent foundation in accordance with State or local building codes provided the permanent foundation provides protection to the residents of manufactured homes that equals or exceeds the protection provided by these Model Installation Standards. In addition, nothing in these Model Installation Standards is intended to limit the ability of mortgage lenders or others to establish financing eligibility requirements or technical underwriting standards or requirements for permanent foundations that provide protection to the residents of manufactured homes that equals or exceeds the protection provided by these Model Installation Standards.

(b) When a permanent foundation design is required and is not available from the home manufacturer or covered in the local building code, a registered professional engineer or registered architect must design the anchorage and foundation support requirements.

§ 3285.315 Special snow load conditions.

(a) In general, foundations for homes designed for and located in areas with roof live loads greater than 40 psf must be designed by the manufacturer for the special snow load conditions in accordance with acceptable engineering practice. Where site or other conditions prohibit the use of the manufacturer's instructions, a registered professional engineer or registered architect must design the foundation for the special snow load conditions.

(b) *Ramadas.* Ramadas may be used in areas with roof live loads greater than 40

psf. Any connection to the home must be for weatherproofing only.

Subpart E—Anchorage Against Wind

§ 3285.401 Anchoring instructions.

(a) After blocking and leveling, the installer must secure the manufactured home against the wind by use of anchor assembly type installations or by connections to alternative foundation systems (§ 3285.301) or permanent foundations (§ 3285.314).

(b) For anchor assembly type installations, the manufactured home must be secured against the wind as described in § 3285.401. So as not to preclude other design configurations or alternative foundation systems, when using another type of installation, the design must be prepared by a registered professional engineer or registered architect in accordance with acceptable engineering practice, the design loads of the Federal Manufactured Home Construction and Safety Standards (24 CFR part 3280), and § 3285.301(d).

(c) All anchoring and foundation systems must be capable of meeting the loads required by part 3280, subpart D of this chapter, that the home was designed to withstand as shown on the home's data plate.

§ 3285.402 Ground anchor installations.

(a) *Specifications for tie-down straps and ground anchors.* (1) *Ground anchors.*

Ground anchors must be listed, zinc-coated (0.30 oz/ft^2 of surface area), and be capable of resisting a minimum total load capacity of 4725 lb and a working load capacity of 3150 lb, unless reduced capacities are noted in accordance with note 11 of Table 1 of this section or note 12 of Tables 2 and 3 of this section. The resistance capability of ground anchors and anchoring equipment must be determined by a registered professional engineer, registered architect, or tested by a nationally recognized third party testing agency in accordance with a nationally recognized testing protocol.

(2) *Tie-down straps.* A 1¼ inch × 0.035 in or larger zinc-coated (0.30 oz/ft^2 of surface area) steel strapping conforming to ASTM D 3953–97, Standard Specification for Strapping, Flat Steel and Seals, Type 1, Grade 1, Finish B with a minimum total capacity of 4,725 pounds (lbs) and a working capacity of 3,150 pounds (lbs) must be used. Slit or cut edges of coated strapping need not be zinc coated.

(b) *Number and location of ground anchors.* (1) Ground anchor and anchor strap spacing for installation of single-section and multi-section manufactured homes must be consistent with the appropriate spacing shown in Tables 1 through 3 of this section, and Figures A and B of this section.

BILLING CODE 4210–27—P

Figure A to § 3285.402 - Ground Anchor Locations and Spacing – Plan View.

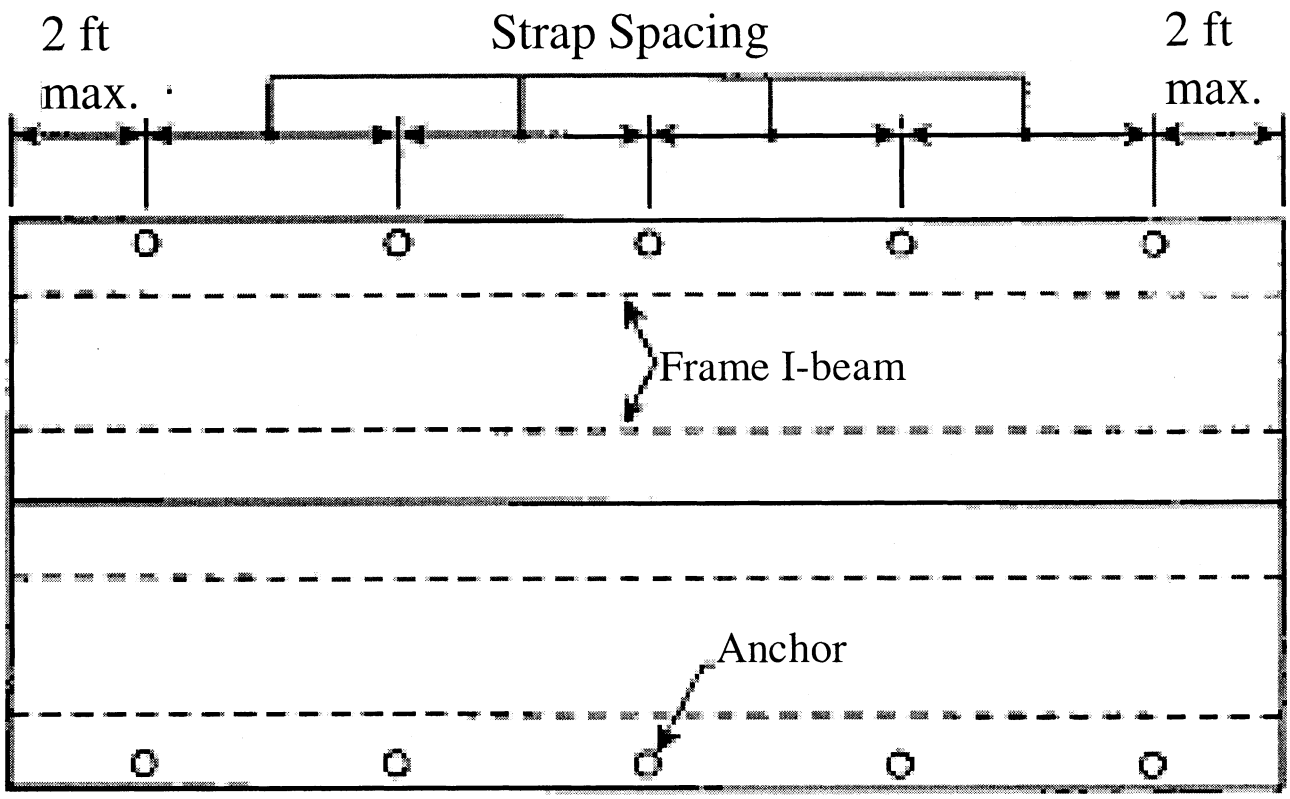

Notes:

1. Refer to Tables 1, 2, and 3 of this section for maximum ground anchor spacing.

2. Longitudinal anchors not shown for clarity, refer to § 3285.402(b)(2) for longitudinal anchoring requirements.

(2) Longitudinal anchoring. Manufactured homes must be stabilized against wind in the longitudinal direction in all Wind Zones. Manufactured homes located in Wind Zones 2 and 3 must have longitudinal ground anchors installed on the ends of the manufactured home transportable section(s). A registered professional engineer or registered architect must design alternative longitudinal anchoring methods in accordance with acceptable engineering practice.

Figure B to § 3285,402 - Anchor Strap and Pier Relationship.

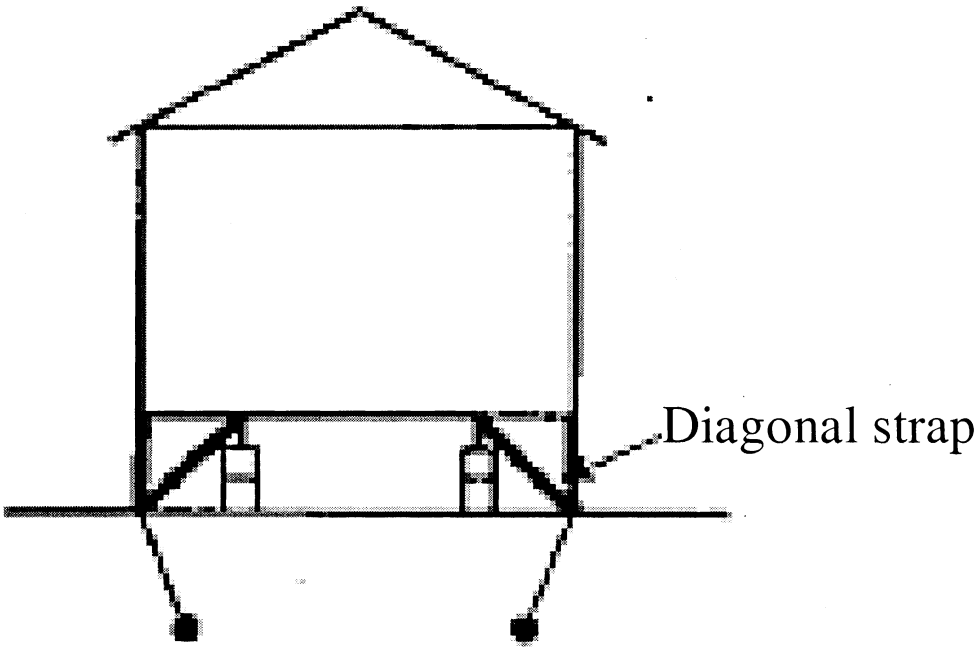

Near Beam Method

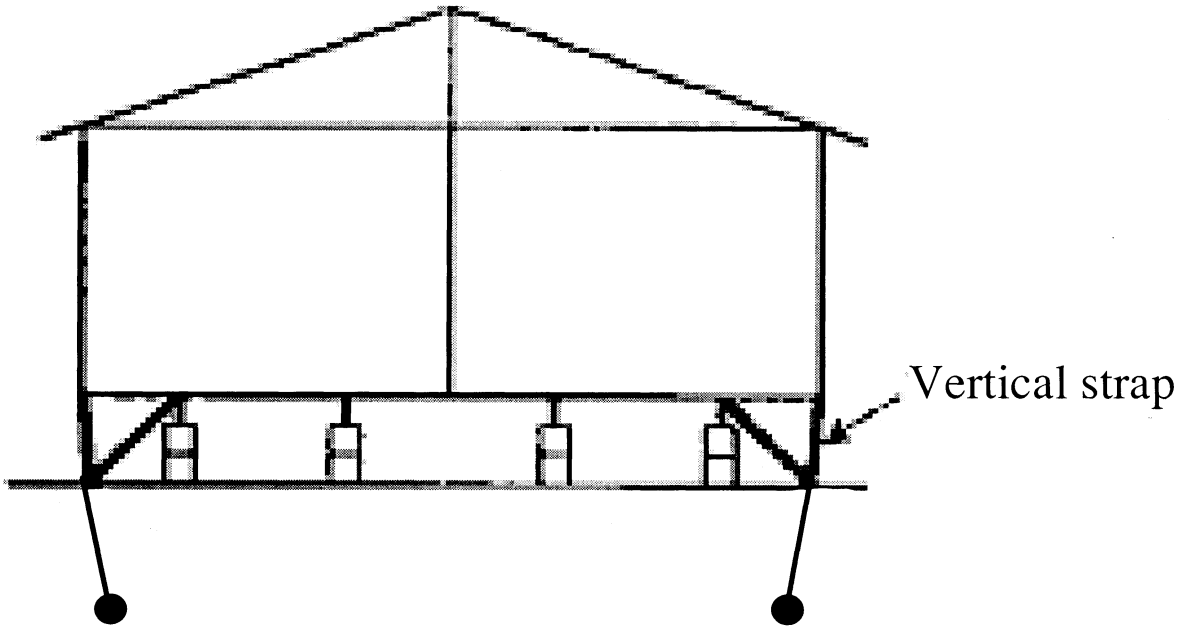

Near Beam Method
(Mate-line piers and anchors omitted for clarity)

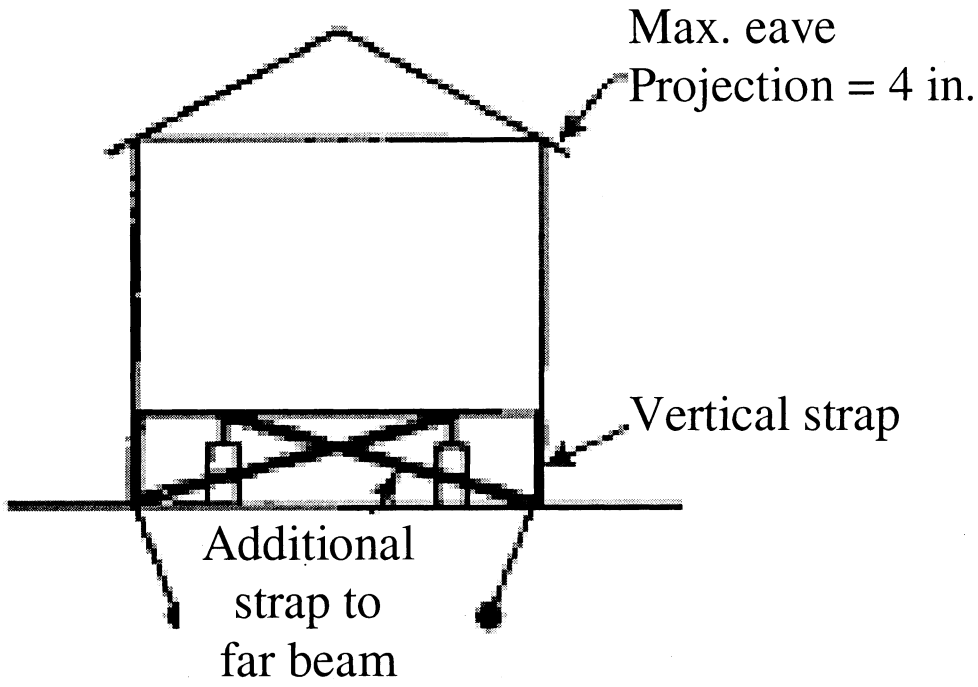

Second Beam Method
(Vertical tiedown straps required)

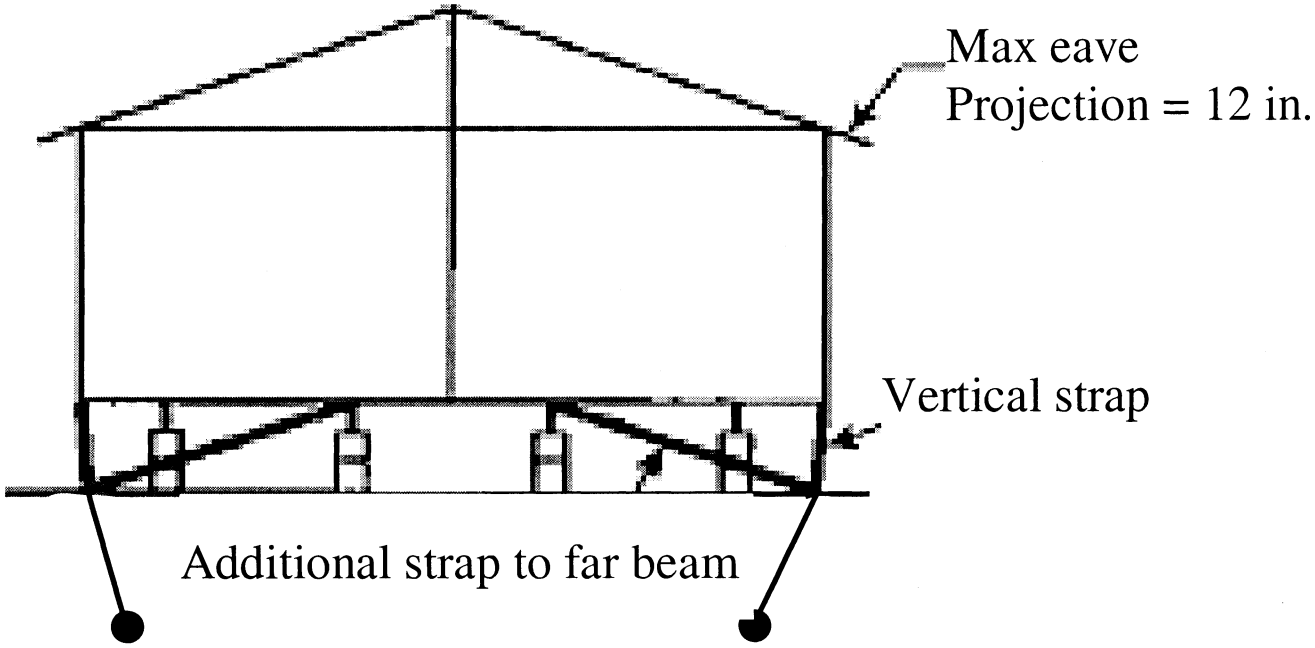

Second Beam Method
(Mate-line piers and anchors omitted for clarity)

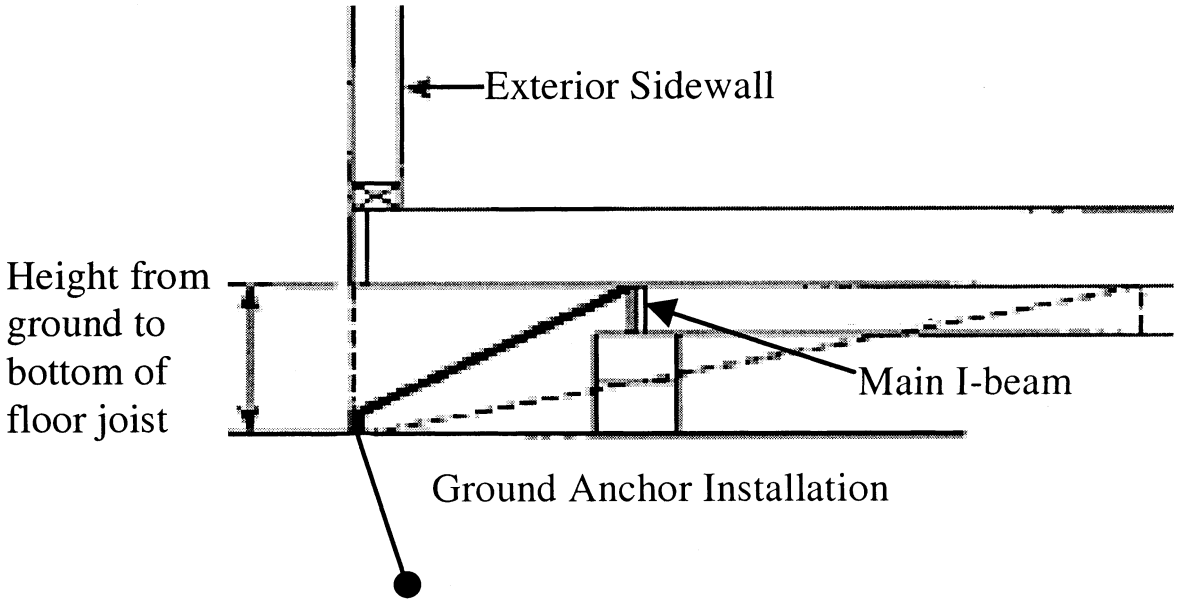

Notes:

1. Vertical Straps not required in Wind Zone 1

2. Diagonal ties must be attached to the top flange of the chassis beam to prevent rotation of the beam.

BILLING CODE 4210–27–C

(3) The requirements in § 3285.402(b)(1) must be used to determine the maximum spacing of ground anchors and their accompanying anchor straps based on the soil classification determined in accordance with § 3285.202.

(i) The installed ground anchor size (length) must be for the listed soil class.

(ii) All ground anchors must be installed in accordance with their listing or certification and the ground anchor manufacturer installation instructions; stabilizer plates must zinc-coated (0.30 oz/ft^2 of surface area) and installed as required by the ground anchor listing or certification.

(c) Each ground anchor must be manufactured and provided with installation instructions in accordance with its listing or certification. A nationally recognized testing agency must list, or a registered professional engineer or registered architect must certify the ground anchor for use in a classified soil (refer to § 3285.202) based on a nationally recognized testing protocol.

TABLE 1.—MAXIMUM DIAGONAL TIEDOWN STRAP SPACING, WIND ZONE I

Nominal floor width, single section/multi-section	Max. height from ground to diagonal strap attachment	I-beam spacing (82.5 in. max.)	I-beam spacing (99.5 in. max.)
12/24 ft, 132 in. to 155 in. section(s)	25 in.	14 ft 2 in.	9 ft 9 in.
	33 in.	11 ft 9 in.	7 ft 8 in.
	46 in.	9 ft 1 in.	5 ft 8 in.
	67 in.	6 ft 6 in.	4 ft 0 in.
14/28 ft, 156 in. to 179 in. section(s)	25 in.	18 ft 2 in.	15 ft 11 in.
	33 in.	16 ft 1 in.	13 ft 6 in.
	46 in.	13 ft 3 in.	10 ft 8 in.
	67 in.	10 ft 0. in.	7 ft 9 in.
16/32 ft, 180 in. to 204 in. section(s)	25 in.	20 ft 7 in.	19 ft 5 in.
	33 in.	19 ft 0 in.	17 ft 5 in.
	46 in.	16 ft 5 in.	14 ft 7 in.
	67 in.	13 ft 1 in.	11 ft 3 in.

TABLE 1.—MAXIMUM DIAGONAL TIEDOWN STRAP SPACING, WIND ZONE I—Continued

Nominal floor width, single section/multi-section	Max. height from ground to diagonal strap attachment	I-beam spacing (82.5 in. max.)	I-beam spacing (99.5 in. max.)
18 ft, 204 in. to 216 in. section(s)	25 in.	22 ft 4 in.	21 ft 8 in.
	33 in.	21 ft 1 in.	20 ft 2 in.
	46 in.	19 ft 0 in.	17 ft 8 in.
	67 in.	15 ft 9 in.	14 ft 3 in.

Notes:

1. Table based on maximum 90 in. sidewall height.
2. Table based on maximum 4 in. inset for ground anchor head from edge of floor or wall.
3. Table based on main rail (I-beam) spacing per given column.
4. Table based on maximum 4 in. eave width for single-section homes and maximum 12 in. for multi-section homes.
5. Table based on maximum 20-degree roof pitch (4.3/12).
6. Interpolation may be required for other heights from ground to strap attachment. The minimum height from the ground to the bottom of the floor joist must be 18 in.
7. Additional tiedowns may be required per the home manufacturer instructions.
8. Ground anchors must be certified for these conditions by a professional engineer, architect, or listed by a nationally recognized testing laboratory.
9. Ground anchors must be installed to their full depth, and stabilizer plates must be installed per the ground anchor and home manufacturer instructions.
10. Strapping and anchoring equipment must be certified by a registered professional engineer or registered architect, or listed by a nationally recognized testing agency to resist these specified forces in accordance with testing procedures in ASTM D 3953–97, Standard Specification for Strapping, Flat Steel and Seals.
11. A reduced ground anchor or strap working load capacity will require reduced tiedown strap and anchor spacing. Ground anchors must not be spaced closer than the minimum spacing permitted by the listing or certification.
12. Table is based on a 3150 lb working load capacity, and straps must be placed within 2 ft of the ends of the home.

TABLE 2.—MAXIMUM DIAGONAL TIEDOWN STRAP SPACING, WIND ZONE II

Nominal floor width, single section/multi-section	Max. height from ground to diagonal strap attachment	Near beam method I-beam spacing		Second beam method I-beam spacing	
		82.5 in.	99.5 in.	82.5 in.	99.5 in.
12 ft/24 ft, 132 in. to 155 in. section(s)	25 in.	6 ft 2 in.	4 ft 3 in.	7 ft 6 in.	7 ft 7 in.
	33 in.	5 ft 2 in.	N/A	7 ft 2 in.	7 ft 4 in.
	46 in.	4 ft 0 in.	N/A	6 ft 9 in.	6 ft 11 in.
	67 in.	N/A	N/A	6 ft 1 in.	6 ft 3 in.
14 ft/28 ft, 156 in. to 179 in. section(s)	25 in.	7 ft 7 in.	6 ft 9 in.	7 ft 8 in.	7 ft 9 in.
	33 in.	6 ft 10 in.	5 ft 9 in.	7 ft 5 in.	7 ft 6 in.
	46 in.	5 ft 7 in.	4 ft 6 in.	7 ft 0 in.	7 ft 2 in.
	67 in.	4 ft 3 in.	NA	6 ft 5 in.	6 ft 7 in.
16 ft/32 ft, 180 in. to 204 in. section(s)	25 in.	7 ft 9 in.	7 ft 10 in.	7 ft 10 in.	7 ft 10 in.
	33 in.	7 ft 6 in.	7 ft 2 in.	7 ft 7 in.	7 ft 8 in.
	46 in.	6 ft 9 in.	6 ft 0 in.	7 ft 2 in.	7 ft 3 in.
	67 in.	5 ft 4 in.	4 ft 7 in.	6 ft 8 in.	6 ft 9 in.
18 ft, 204 in. to 216 in. section(s)	25 in.	7 ft 10 in.	7 ft 9 in.	7 ft 11 in.	8 ft 0 in.
	33 in.	7 ft 8 in.	7 ft 8 in.	7 ft 9 in.	7 ft 9 in.
	46 in.	7 ft 4 in.	7 ft 0 in.	7 ft 4 in.	7 ft 5 in.
	67 in.	6 ft 3 in.	5 ft 8 in.	6 ft 10 in.	6 ft 11 in.

Notes:

1. Table based on maximum 90 in. sidewall height.
2. Table based on maximum 4 in. inset for ground anchor head from edge of floor or wall.
3. Tables based on main rail (I-beam) spacing per given column.
4. Table based on maximum 4 in. eave width for single-section homes and maximum 12 in. for multi-section homes.
5. Table based on maximum 20-degree roof pitch (4.3/12).
6. All manufactured homes designed to be located in Wind Zone II must have a vertical tie installed at each diagonal tie location.
7. Interpolation may be required for other heights from ground to strap attachment. The minimum height from the ground to the bottom of the floor joist must be 18 in.
8. Additional tiedowns may be required per the home manufacturer instructions.
9. Ground anchors must be certified by a professional engineer, or registered architect, or listed by a nationally recognized testing laboratory.
10. Ground anchors must be installed to their full depth, and stabilizer plates must be installed per the ground anchor and home manufacturer instructions.
11. Strapping and anchoring equipment must be certified by a registered professional engineer or registered architect or must be listed by a nationally recognized testing agency to resist these specified forces in accordance with testing procedures in ASTM D 3953–97, Standard Specification for Strapping, Flat Steel and Seals.
12. A reduced ground anchor or strap working load capacity will require reduced tiedown strap and anchor spacing. Ground anchors must not be spaced closer than the minimum spacing permitted by the listing or certification.
13. Table is based on a 3150 lb working load capacity, and straps must be placed within 2 ft of the ends of the home.

TABLE 3.—MAXIMUM DIAGONAL TIEDOWN STRAP SPACING, WIND ZONE III

Nominal floor width single section/multi-section	Max. height from ground to diagonal strap attachment	Near beam method I-beam spacing		Second beam method I-beam spacing	
		82.5 in.	99.5 in.	82.5 in.	99.5 in.
12 ft/24 ft 132 in. to 155 in. section(s)	25 in.	5 ft 1 in.	N/A	6 ft 1 in.	6 ft 2 in.
	33 in.	4 ft 3 in.	N/A	5 ft 10 in.	6 ft 0 in.
	46 in.	N/A	N/A	5 ft 6 in.	5 ft 8 in.
	67 in.	N/A	N/A	5 ft 0 in.	5 ft 1 in.
14 ft/28 ft 156 in. to 179 in. section(s)	25 in.	6 ft 2 in.	5 ft 7 in.	6 ft 3 in.	6 ft 4 in.
	33 in.	5 ft 8 in.	4 ft 9 in.	6 ft 0 in.	6 ft 1 in.
	46 in.	4 ft 8 in.	N/A	5 ft 8 in.	5 ft 9 in.
	67 in.	N/A	N/A	5 ft 2 in.	5 ft 4 in.
16 ft/32 ft 180 in. to 204 in. section(s)	25 in.	6 ft 4 in.	6 ft 3 in.	6 ft 4 in.	6 ft 3 in.
	33 in.	6 ft 1 in.	5 ft 11 in.	6 ft 2 in.	6 ft 2 in.
	46 in.	5 ft 7 in.	5 ft 0 in.	5 ft 10 in.	5 ft 11 in.
	67 in.	4 ft 5 in.	N/A	5 ft 5 in.	5 ft 6 in.
18 ft 204 in. to 216 in. section(s)	25 in.	6 ft 2 in.	6 ft 1 in.	6 ft 2 in.	6 ft 1 in.
	33 in.	6 ft 1 in.	6 ft 0 in.	6 ft 1 in.	6 ft 0 in.
	46 in.	5 ft 11 in.	5 ft 10 in.	6 ft 0 in.	5 ft 11 in.
	67 in.	5 ft 2 in.	4 ft 8 in.	5 ft 7 in.	5 ft 7 in.

Notes:
1. Table is based on maximum 90 in. sidewall height.
2. Table based on maximum 4 in. inset for ground anchor head from edge of floor or wall.
3. Table is based on main rail (I-beam) spacing per given column.
4. Table based on maximum 4 in. eave width for single-section homes and maximum 12 in. for multi-section homes.
5. Table based on maximum 20-degree roof pitch (4.3/12).
6. All manufactured homes designed to be located in Wind Zone III must have a vertical tie installed at each diagonal tie location.
7. Interpolation may be required for other heights from ground to strap attachment. The minimum height from the ground to the bottom of the floor joist must be 18 in.
8. Additional tiedowns may be required per the home manufacturer instructions.
9. Ground anchors must be certified by a professional engineer, or registered architect, or listed by a nationally recognized testing laboratory.
10. Ground anchors must be installed to their full depth, and stabilizer plates must be installed per the ground anchor and home manufacturer instructions.
11. Strapping and anchoring equipment must be certified by a registered professional engineer or registered architect or must be listed by a nationally recognized testing agency to resist these specified forces in accordance with testing procedures in ASTM D 3953–97, Standard Specification for Strapping, Flat Steel and Seals.
12. A reduced ground anchor or strap working load capacity will require reduced tiedown strap and anchor spacing. Ground anchors must not be spaced closer than the minimum spacing permitted by the listing or certification.
13. Table is based on a 3150 lb working load capacity, and straps must be placed within 2 ft of the ends of the home.

§ 3285.403 Sidewall, over-the-roof, mate-line, and shear wall straps.

If sidewall, over-the roof, mate-line, or shear wall straps are installed on the home, they must be connected to an anchoring assembly.

§ 3285.404 Severe climatic conditions.

In frost-susceptible soil locations, ground anchor augers must be installed below the frost line, or frost protected as designed by a registered professional engineer or registered architect in accordance with acceptable engineering practice and § 3280.306 of this chapter.

§ 3285.405 Severe wind zones.

When any part of a home is installed within 1,500 feet of a coastline in Wind Zones II or III, the manufactured home must be designed for the increased requirements as specified on the home's data plate (refer to § 3280.5(f) of this chapter) in accordance with acceptable engineering practice. Where site or other conditions prohibit the use of the manufacture's instructions, a registered professional engineer or registered architect in accordance with acceptable engineering practice must design anchorage for the special wind conditions.

§ 3285.406 Flood hazard areas.

In flood hazard areas, the piers, anchoring, and support systems must be capable of resisting loads associated with design flood and wind events (Refer to § 3285.101).

Subpart F—Optional Features

§ 3285.501 Home installation manual supplements.

Supplemental instructions for optional equipment or features must be approved by the DAPIA as not taking the home out of conformance with the requirements of this part or part 3280 of this chapter and included with the manufacturer installation instructions.

§ 3285.502 Expanding rooms.

The support and anchoring systems for expanding rooms must be installed in accordance with designs prepared by a registered professional engineer or registered architect in accordance with acceptable engineering practice.

§ 3285.503 Optional appliances.

(a) *Comfort cooling systems.* When not provided and installed by the home manufacturer, comfort cooling systems must be installed according to the appliance manufacturer installation instructions.

(1) *Air conditioners.* Air conditioning equipment must be listed or certified by a nationally recognized testing agency for the application for which the unit is intended and installed in accordance with the terms of its listing or certification (Refer to § 3280.714 of this chapter).

(i) *Energy efficiency.* (A) For proper operation and energy efficiency, site-installed central air conditioning equipment must be sized to closely match the home's heat gain, following Chapter 28 of the 1997 ASHRAE Handbook of Fundamentals or ACCA Manual J, Residential Cooling Load, 8th edition. Information necessary to calculate the home's sensible heat gain

can be found on the home's comfort cooling certificate.

(B) The BTU/hr rated capacity of the site-installed air conditioning equipment must not exceed the air distribution system's rated BTU/hr capacity as shown on the home's compliance certificate.

(ii) *Circuit rating.* If a manufactured home is factory provided with an exterior outlet to energize heating and/or air conditioning equipment, the branch circuit rating on the tag adjacent to this outlet must be equal to or greater than the minimum circuit amperage identified on the equipment rating plate.

(iii) *A-coil units.* (A) A-coil air conditioning units must be compatible and listed for use with the furnace in the home.

(B) The air conditioner manufacturer instructions must be followed.

(C) All condensation must be directed beyond the perimeter of the home by means specified by the equipment manufacturer.

(2) *Heat pumps.* Heat pumps must be listed or certified by a nationally recognized testing agency for the application for which the unit is intended and installed in accordance with the terms of its listing or certification. Refer to § 3280.714 of this chapter.

(3) *Evaporative coolers.* A roof-mounted cooler must be listed or certified by a nationally recognized testing agency for the application for which the unit is intended and installed in accordance with the terms of its listing (Refer to § 3280.714 of this chapter).

(i) Any discharge grill must not be closer than three feet from a smoke alarm.

(ii) Before field installing a roof mounted evaporative cooler, the installer must ensure that the roof will support the weight of the cooler.

(iii) A rigid base must be provided to distribute the cooler weight over multiple roof trusses to adequately support the weight of the evaporative cooler.

(b) *Fireplace and wood-stove chimneys and air inlets.* Fireplace and wood-stove chimneys and air inlets must be listed for use with manufactured homes and must be installed in accordance with their listings.

(c) *Appliance venting.* (1) Heat producing appliances must exhaust to the exterior of the home.

(2) When the vent exhausts through the floor, the vent must not terminate under the home and must extend to the home's exterior and through any skirting that may be installed.

(d) *Flood hazard areas.* (1) *Outside appliances.* Appliances installed on the manufactured home site must be anchored and elevated to or above the same elevation as the lowest elevation of the lowest floor of the home.

(2) *Air inlets.* Appliance air inlets must be located at or above the same elevation as the lowest elevation of the lowest floor of the home.

(e) *Clothes dryer exhaust duct system.* A clothes dryer exhaust duct system must conform with and be completed in accordance with the appliance manufacturer instructions and § 3280.708 of this chapter. The vents must exhaust to the exterior of the home, beyond any perimeter skirting installed around it, as shown in the figure to this section.

BILLING CODE 4210–27–P

Figure to § 3285.503 - Dryer Exhaust System.

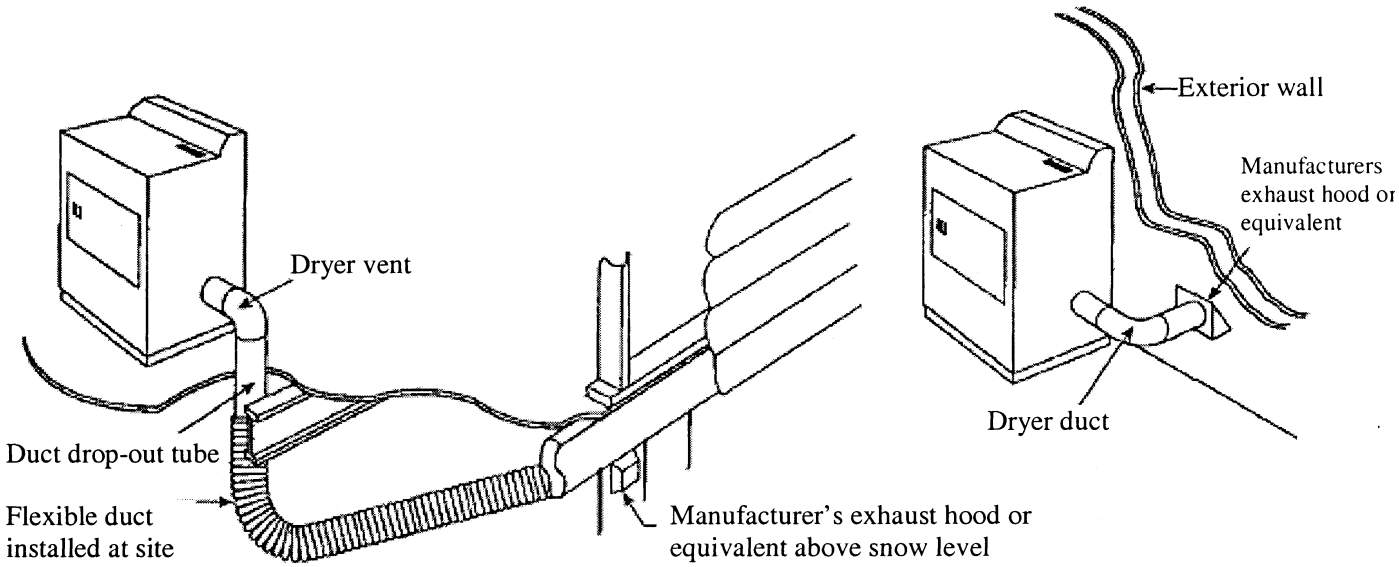

Notes:

1. Installation of the exhaust system must be in accordance with the dryer manufacturer instructions.

2. Dryer exhaust system must not contain reverse slope or terminate under the home.

§ 3285.504 Skirting.

(a) Skirting, if used, must be of weather-resistant materials.

(b) Skirting must not be attached in a manner that can cause water to be trapped between the siding and trim or forced up into the wall cavities trim to which it is attached.

(c) All wood skirting within 6 inches of the ground must be pressure treated or naturally resistant to decay and termite infestations.

(d) Skirting must not be attached in a manner that impedes the contraction and expansion characteristics of the home's exterior covering.

§ 3285.505 Crawlspace ventilation.

(a) A crawlspace with skirting must be provided with ventilation openings. The minimum net area of ventilation openings must not be less than one square foot (ft^2) for every 150 square feet (ft^2) of the home's floor area. The total area of ventilation openings may be reduced to one square foot (ft^2) for every 1,500 square feet (ft^2) of the home's floor area where a uniform 6-mil polyethylene sheet material or other acceptable vapor retarder is installed according to § 3285.204, on the ground surface beneath the entire floor area of the home.

(b) Ventilation openings must be placed as high as practicable.

(c) Openings must be located on at least two opposite sides to provide cross-ventilation.

(d) Ventilation openings must be covered for their full height and width with a perforated metal covering.

(e) Access opening(s) not less than 18 inches in any dimension and not less than three square feet (ft^2) in area must be provided and must be located so that any utility connections located under the home are accessible.

(f) Dryer vents, air conditioning condensation drains, and combustion air inlets must pass through the skirting to the outside.

Subpart G—Ductwork and Plumbing and Fuel Supply Systems

§ 3285.601 Field assembly.

Home manufacturers must provide specific written instructions for installers on the proper field assembly for any shipped loose duct, plumbing, and fuel supply system parts, necessary to join all sections of the home and designed to be located underneath the home. The home manufacturer installation instructions must be designed in accordance with applicable requirements of part 3280, subparts G and H of this chapter, as specified hereafter.

§ 3285.602 Utility connections.

Refer to § 3285.905 for considerations for utility system connections.

§ 3285.603 Water supply.

(a) *Crossover.* Multi-section homes with plumbing in both sections require water-line crossover connections to join all sections of the home. The crossover must be designed in accordance with § 3280.609 of this chapter.

(b) *Maximum supply pressure and reduction.* When the local water supply pressure exceeds 80 psi to the manufactured home, a pressure-reducing valve must be installed.

(c) *Mandatory shutoff valve.* (1) An accessible shutoff valve must be installed between the water supply and the inlet.

(2) The water riser for the shutoff valve connection must be located underneath or adjacent to the home.

(3) The shutoff valve must be a full-flow gate or ball valve, or equivalent valve.

(d) *Freezing protection.* Water line crossovers completed during installation must be protected from freezing. The freeze protection must be designed accordance with the requirements of § 3280.603 of this chapter.

(1) If subject to freezing temperatures, the water connection must be wrapped with insulation or otherwise protected to prevent freezing, under normal occupancy.

(2) In areas subject to freezing or subfreezing temperatures, exposed sections of water supply piping, shutoff valves, pressure reducers, and pipes in water heater compartments must be insulated or otherwise protected from freezing, under normal occupancy.

(3) *Use of pipe heating cable.* Only pipe heating cable listed for manufactured home use is permitted to be used and must be installed in accordance with the cable manufacturer installation instructions.

(e) *Testing procedures.* (1) The water system must be inspected and tested for leaks after completion at the site. Testing requirements must be consistent with § 3280.612 of this chapter.

(2) The water heater must be disconnected when using an air-only test.

§ 3285.604 Drainage system.

(a) *Crossovers.* Multi-section homes with plumbing in both sections require drainage system crossover connections to join all sections of the home. The crossover must be designed in accordance with § 3280.610 of this chapter.

(b) *Assembly and support.* If portions of the drainage system were shipped loose because they were necessary to join all sections of the home and designed to be located underneath the home, they must be installed and supported in accordance with § 3280.608 of this chapter.

(c) *Proper slopes.* Drains must be completed in accordance with § 3280.610 of this chapter.

(1) Drain lines must not slope less than one-quarter inch per foot unless otherwise noted on the schematic diagram, as shown in the figure to this section.

Figure to § 3285.604 - Drain Pipe Slope and Connections.

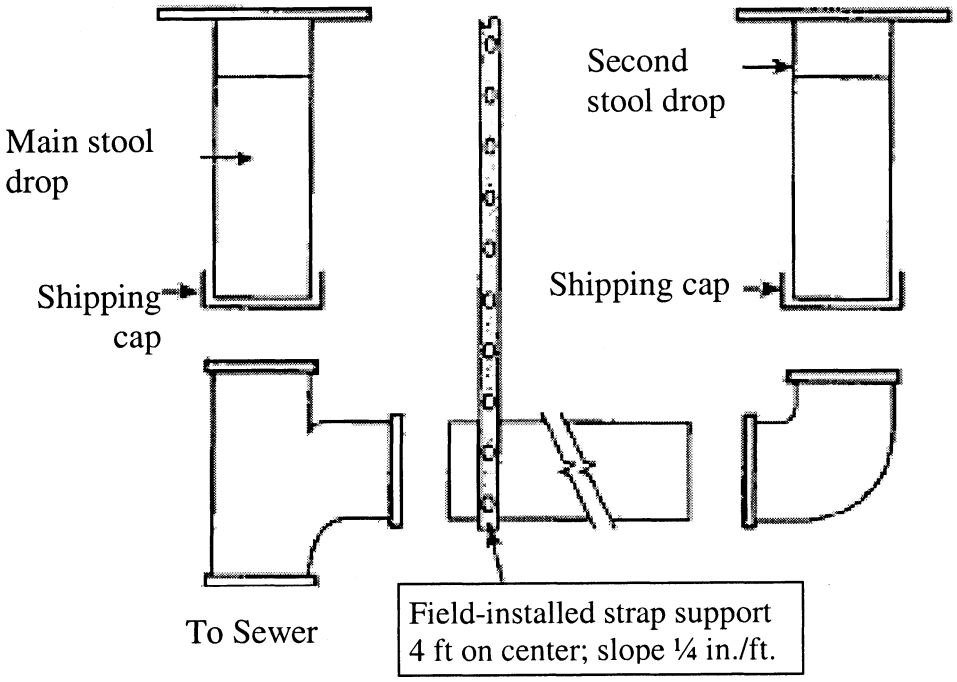

(2) A slope of one-eight inch per foot may be permitted when a clean out is installed at the upper end of the run.

(d) *Testing procedures.* The drainage system must be inspected and tested for leaks after completion at the site. Testing requirements must be consistent with § 3280.612 of this chapter.

§ 3285.605 Fuel supply system.

(a) *Proper supply pressure.* The gas piping system in the home is designed for a pressure that is at least 10 inches of water column [5.8 oz./in^2 or 0.36 psi] and not more than 14 inches of water column [8 oz./in^2 or 0.5 psi]. If gas from any supply source exceeds, or could exceed this pressure, a regulator may be installed as required by an LAHJ.

(b) *Crossovers.* (1) Multi-section homes with fuel supply piping in both sections require crossover connections to join all sections of the home. The crossover must be designed in accordance with § 3280.705 of this chapter.

(2) Tools must not be required to connect or remove the flexible connector quick-disconnect.

(c) *Testing procedures.* The gas system must be inspected and tested for leaks after completion at the site. Testing requirements must be consistent with § 3280.705 of this chapter.

§ 3285.606 Ductwork connections.

(a) *Crossovers.* Multi-section homes with ductwork in both sections require crossover connections to join all sections of the home. As necessary for the joining of all sections of the home, metal plumber's tape, galvanized metal straps, or tape and mastics listed to UL 181 must be used around the duct collar and secured tightly.

(b) If metal straps are used, they must be secured with galvanized sheet metal screws.

(c) Metal ducts must be fastened to the collar with a minimum of three galvanized sheet metal screws equally spaced around the collar.

(d) Air conditioning or heating ducts must be installed in accordance with applicable requirements of the duct manufacturer installation instructions.

(e) The duct must be suspended or supported above the ground and arranged under the floor to prevent compression or kinking in any location, as shown in Figures A and B of this section. In-floor crossover ducts are permitted in accordance with § 3285.606(g).

Figure A to § 3285.606 - Crossover Duct Installation with Two Connecting Ducts.

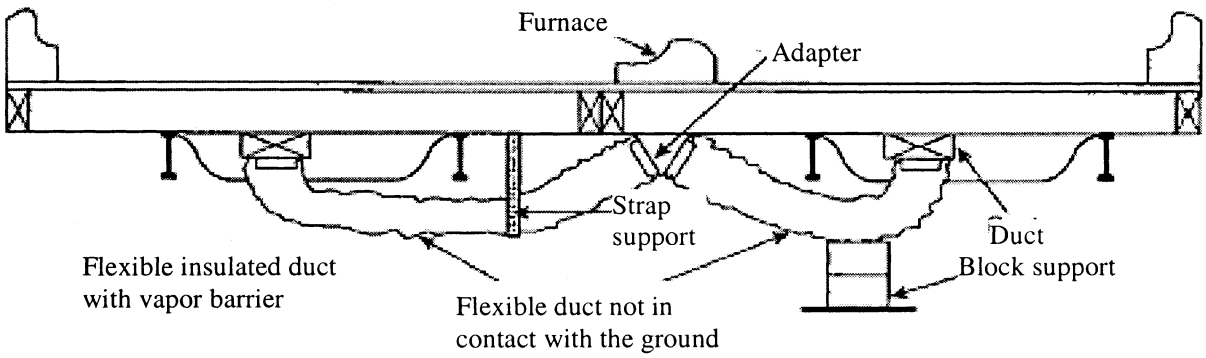

Note:

This system is typically used when a crossover duct has not been built into the floor and the furnace is outside the I-Beam. With this type of installation, it is necessary for two flexible ducts to be installed.

Figure B to § 3285.606 - Crossover Duct Installation with One Connecting Duct.

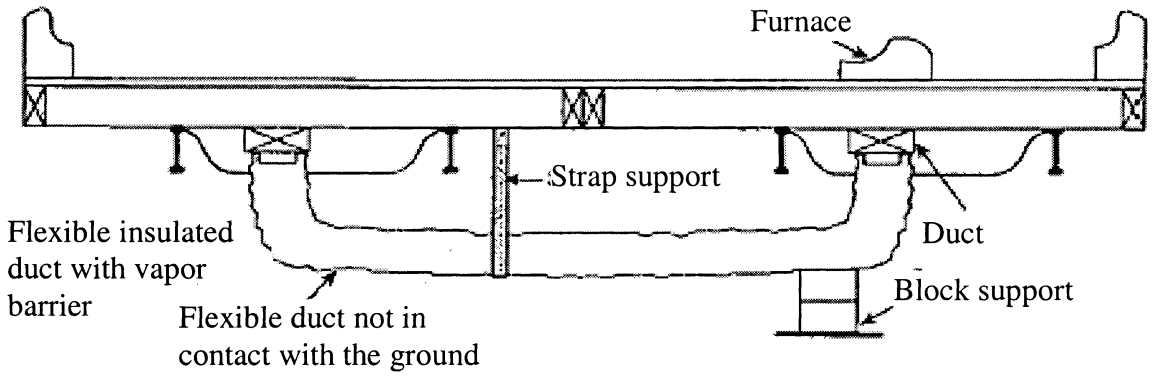

Note:

This system is typically used when a crossover duct has not been built into the floor and the furnace is situated directly over the main duct in one section of the home. A single flexible duct is then used to connect the two sections to each other.

(f) Crossover ducts outside the thermal envelope must be insulated with materials that conform to designs consistent with part 3280, subpart F of this chapter.

(g) In-floor or ceiling crossover duct connections must be installed and sealed to prevent air leakage.

Subpart H—Electrical Systems and Equipment

§ 3285.701 Electrical crossovers.

Multi-section homes with electric in both sections require crossover connections to join all sections of the home. The crossover must be designed in accordance with part 3280, subpart I of this chapter.

§ 3285.702 Miscellaneous lights and fixtures.

(a) When the home is installed, exterior lighting fixtures, ceiling-suspended (paddle) fans, and chain-hung lighting fixtures are permitted to be installed in accordance with their listings and part 3280, subpart I of this chapter.

(b) *Grounding.* (1) All the exterior lighting fixtures and ceiling fans installed per § 3285.702(a) must be grounded by a fixture-grounding device or by a fixture-grounding wire.

(2) For chain-hung lighting fixtures, as shown in Figure A of this section, both a fixture-grounding device and a fixture-grounding wire must be used. The identified conductor must be the neutral conductor.

Figure A to § 3285.702 - Typical Installation of Chain-Hung Lighting Fixture.

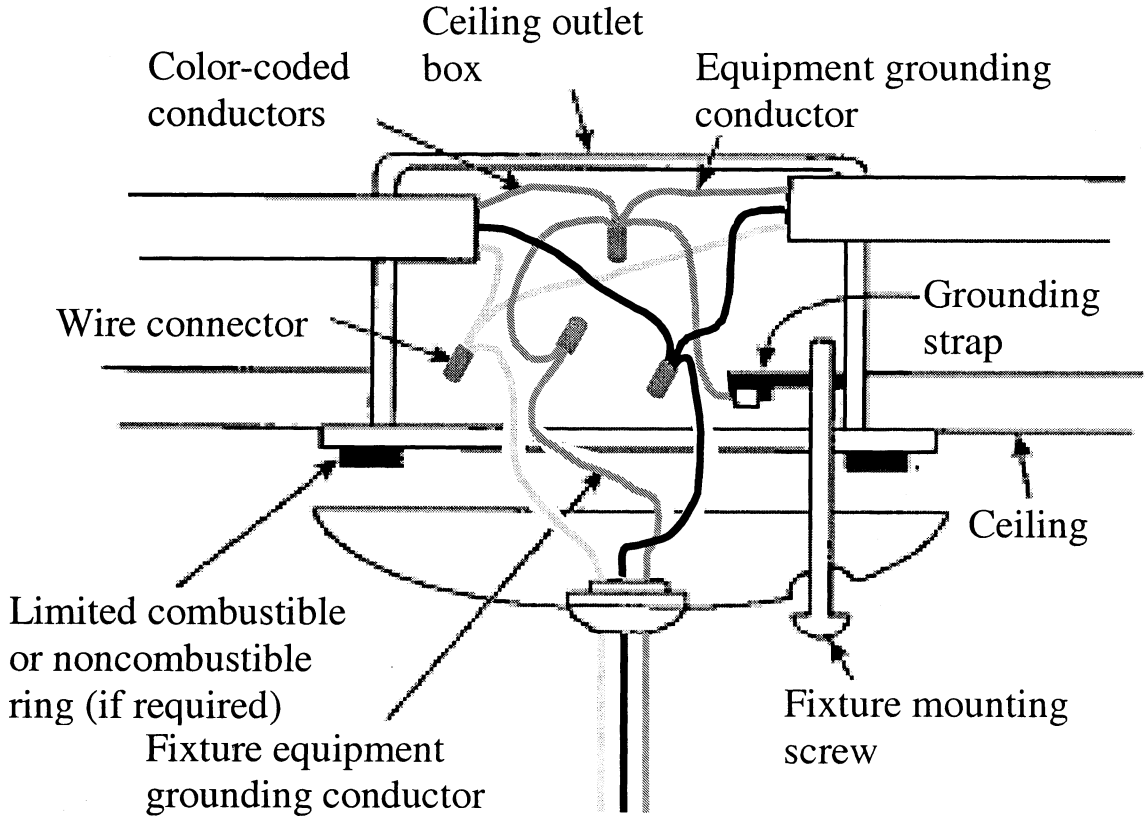

(b) Where lighting fixtures are mounted on combustible surfaces such as hardboard, a limited combustible or noncombustible ring, as shown in Figures A and B of this section, must be installed to completely cover the combustible surface exposed between the fixture canopy and the wiring outlet box.

Figure B to § 3285.702 - Typical Installation of Surface-Mounted Exterior Lighting Fixture.

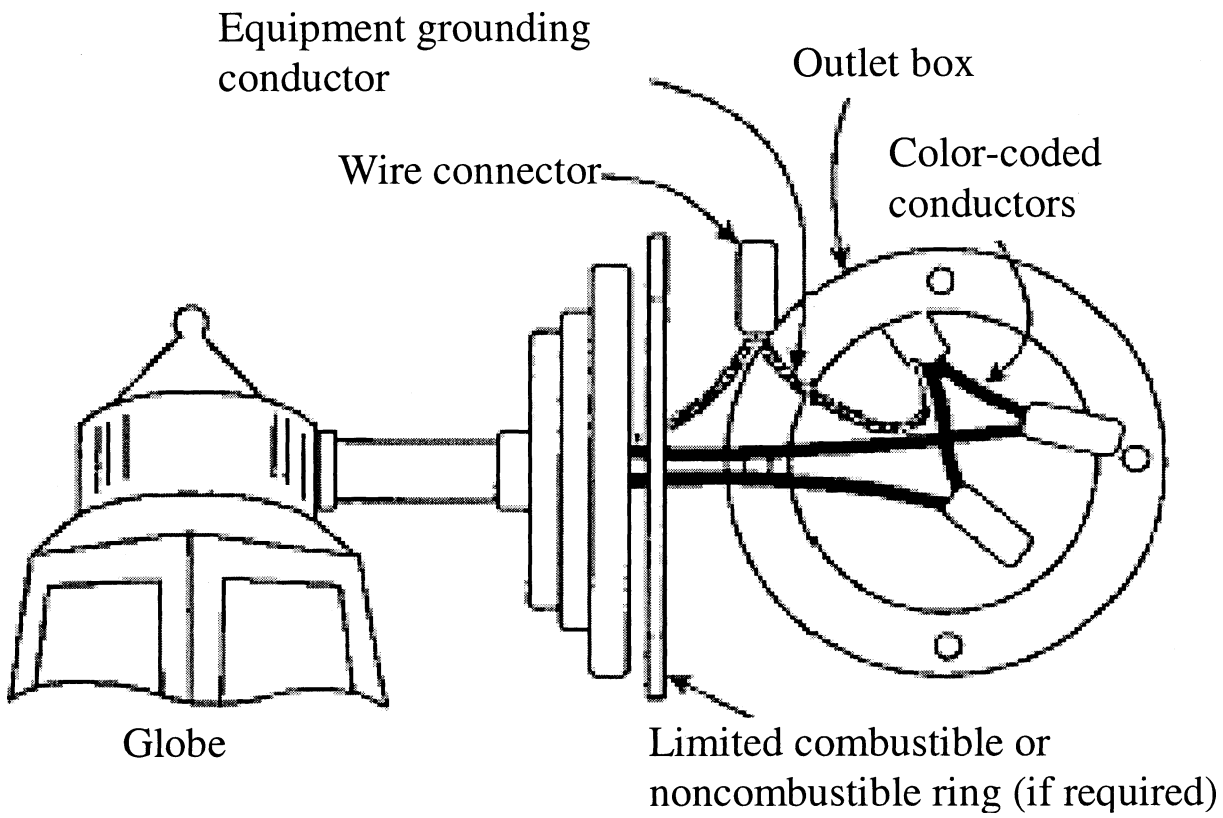

(c) *Exterior lights.* (1) The junction box covers must be removed and wire-to-wire connections must be made using listed wire connectors.

(2) Connect wires black-to-black, white-to-white, and equipment ground-to-equipment ground.

(3) The wires must be pushed into the box, and the lighting fixture must be secured to the junction box.

(4) The lighting fixture must be caulked around its base to ensure a watertight seal to the sidewall.

(5) The light bulb must be installed and the globe must be attached.

(d) *Ceiling fans.* (1) Ceiling-suspended (paddle) fans must be installed with the trailing edges of the blades at least 6 feet 4 inches above the finished floor.

(2) The wiring must be connected in accordance with the product manufacturer installation instructions.

(e) *Testing.* (1) The electrical system must be inspected and tested after completion at the site. Testing requirements must be consistent with § 3280.810 of this chapter.

(2) After completion, each manufactured home must be subjected to the following tests:

(i) An electrical continuity test to ensure that metallic parts are effectively bonded;

(ii) Operational tests of all devices and utilization equipment except water heaters, electric ranges, electric furnaces, dishwashers, clothes washers/dryers, and portable appliances to demonstrate that they are connected and in working order; and

(iii) For electrical equipment installed or completed during installation, electrical polarity checks must be completed to determine that connections have been made properly. Visual verification is an acceptable electrical polarity check.

§ 3285.703 Smoke alarms.

Smoke alarms must be functionally tested in accordance with applicable requirements of the smoke alarm manufacturer instructions and must be consistent with § 3280.208 of this chapter.

§ 3285.704 Telephone and cable TV.

Refer to § 3285.907 for considerations pertinent to installation of telephone and cable TV.

Subpart I—Exterior and Interior Close Up

§ 3285.801 Exterior close-up.

(a) Exterior siding and roofing necessary to join all sections of the home must be installed according to the product manufacturer installation instructions and must be fastened in accordance with designs and manufacturer instructions consistent with §§ 3280.305 and 3280.307 of this chapter. Exterior close-up strips/trim must be fastened securely and sealed with exterior sealant (Refer to figure A of this section).

Figure A to § 3285.801 - Installation of Field-Applied Horizontal Lap Siding

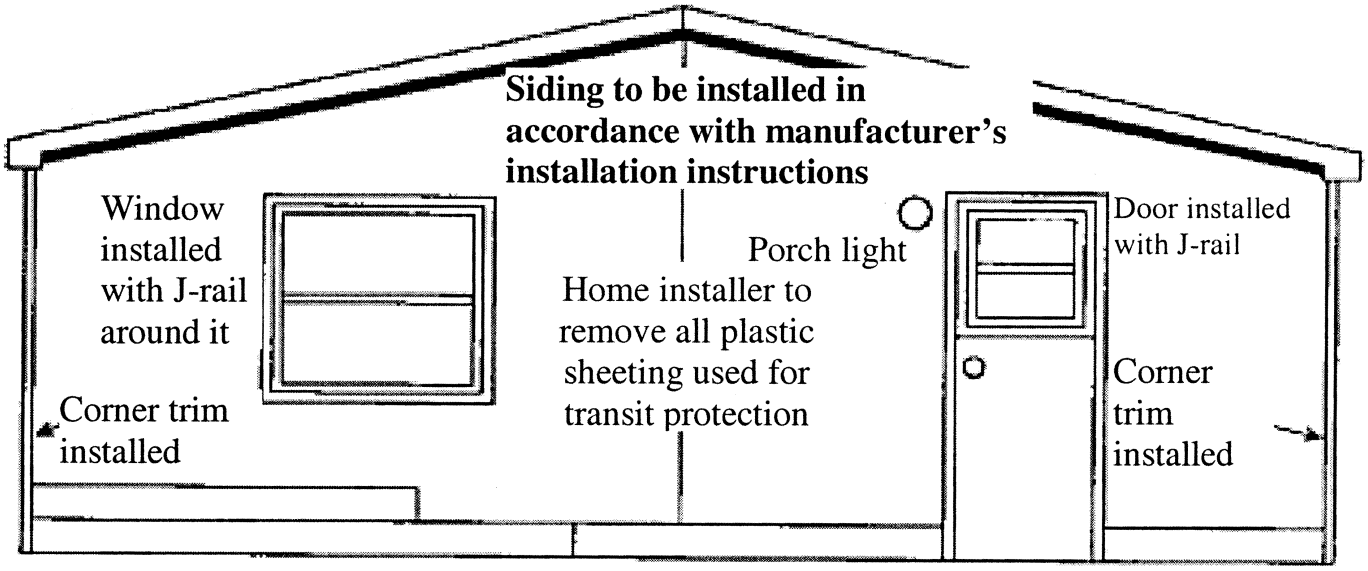

Notes:

1. Double section homes with horizontal-lap siding can be shipped with no siding on the front and rear end walls.

2. The manufacturer must install doors/windows trimmed with J-rail and will cover with plastic sheeting for transport. All siding, starter trim, fasteners, and vents will be shipped loose in the home for installation on set up.

3. All home installers must ensure that all field installed trim, windows, doors, and other openings are properly sealed according to the siding manufacturer installation instructions.

(b) *Joints and seams.* Where appropriate, all joints and seams in exterior wall coverings that were disturbed during location of the home must be made weatherproof.

(c) Prior to installing the siding, the polyethylene sheeting covering exterior walls for transit must be completely removed.

(d) Holes in the roof made in transit or setup must be sealed with exterior sealant.

(e) *Mate-line gasket.* The home manufacturer must provide materials and designs for mate-line gaskets other methods designed to resist the entry of air, water, insects, and rodents at all mate-line locations, exposed to the exterior (Refer to Figure B of this section).

Figure B to § 3285.801 - Mate-Line Gasket.

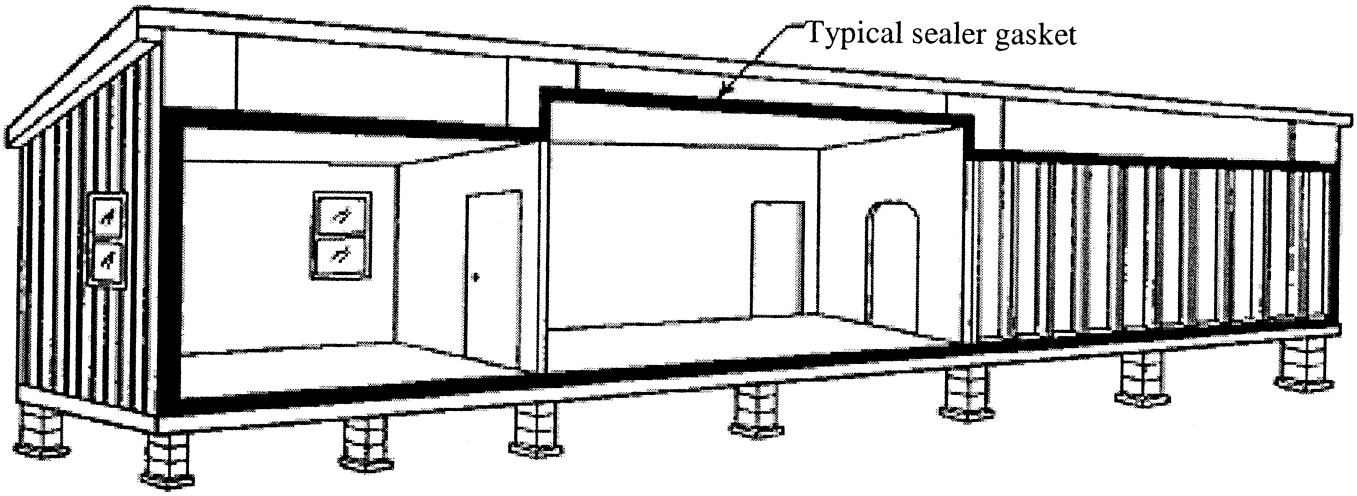

Note: On multi-section manufactured dwellings, install sealer gasket on the ceiling, end walls, and floor mate-line prior to joining the sections together.

(f) *Hinged roofs and eaves.* Hinged roofs and eaves must be completed during installation so as to comply with §§ 3280.305 and 3280.307 of this chapter. However, some hinged roofs may be subject to specific On-Site and/or Alternative Construction requirements issued separately by the Secretary. Generally, hinged roof homes are not subject to such special requirements as long as:

(1) The homes are designed to be located in Wind Zone 1, and

(2) The completed hinged roof pitch is less than 7 on 12, and

(3) Fuel burning appliance flue penetrations are not above the hinge.

§ 3285.802 Structural interconnection of multi-section homes.

(a) For multi-section homes, structural interconnections along the interior and exterior at the mate-line are necessary to join all sections of the home.

(b) The interconnections must be designed in accordance with § 3280.305 of this chapter to ensure a completely integrated structure.

(c) Gaps between the structural elements being interconnected along the mate-line of multi-section homes must not exceed 1½ inches and must be shimmed with dimensional lumber. Where gaps exist and shims are required, fastener lengths must be increased to require adequate penetration of the interconnection fastener into the receiving member.

§ 3285.803 Interior close-up.

(a) All shipping blocking, strapping, or bracing must be removed from appliances, windows, and doors.

(b) Only interior close up items necessary to join all sections of the home or items subject to transportation damage may be packaged or shipped with the home for site installation.

(c) At a minimum, all shipped-loose wall paneling, necessary for the joining of all sections of the home, must be installed by using polyvinyl acetate (PVA) adhesive on all framing members and fastened with minimum one-inch long staples or nails at 6 inches on center panel edges and 12 inches on center in the field (Refer to Figure to § 3285.803).

Figure to § 3285.803 - Installation of Field-Applied Panels.

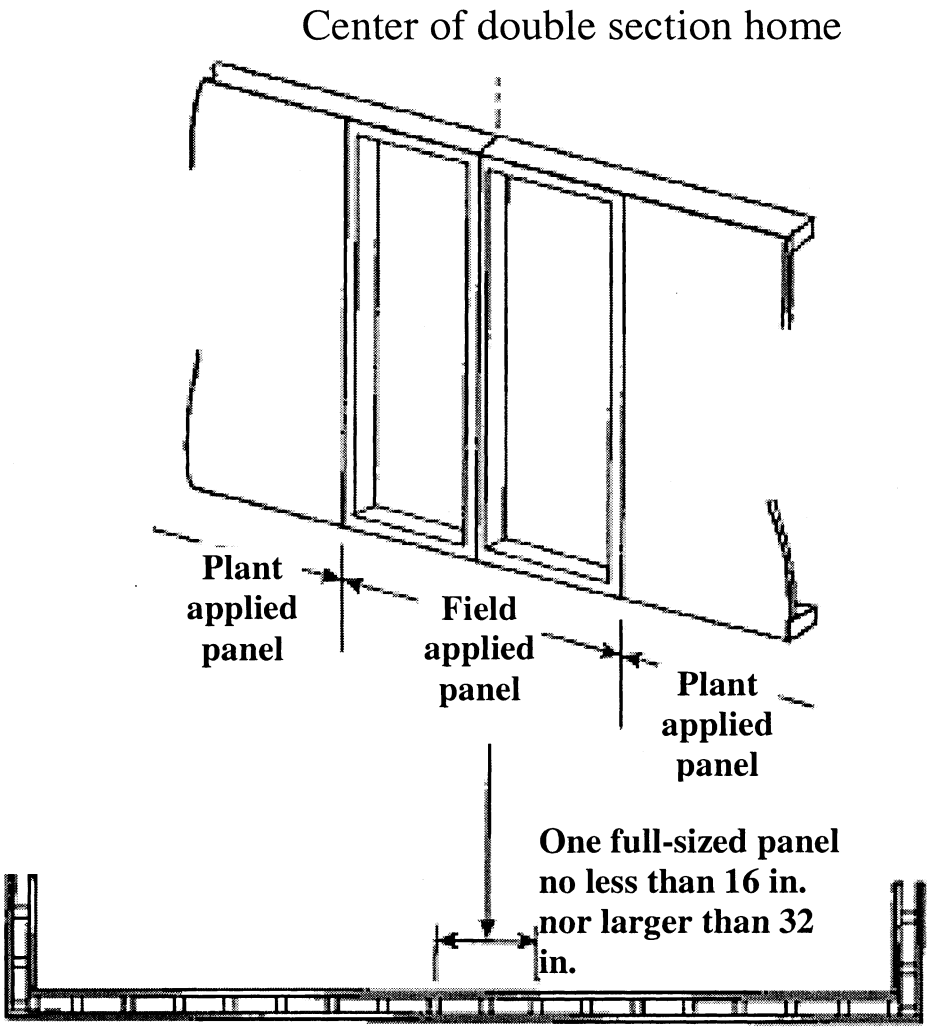

Note:
Specific designs must be approved by a DAPIA and included in the home manufacturer installation instructions.

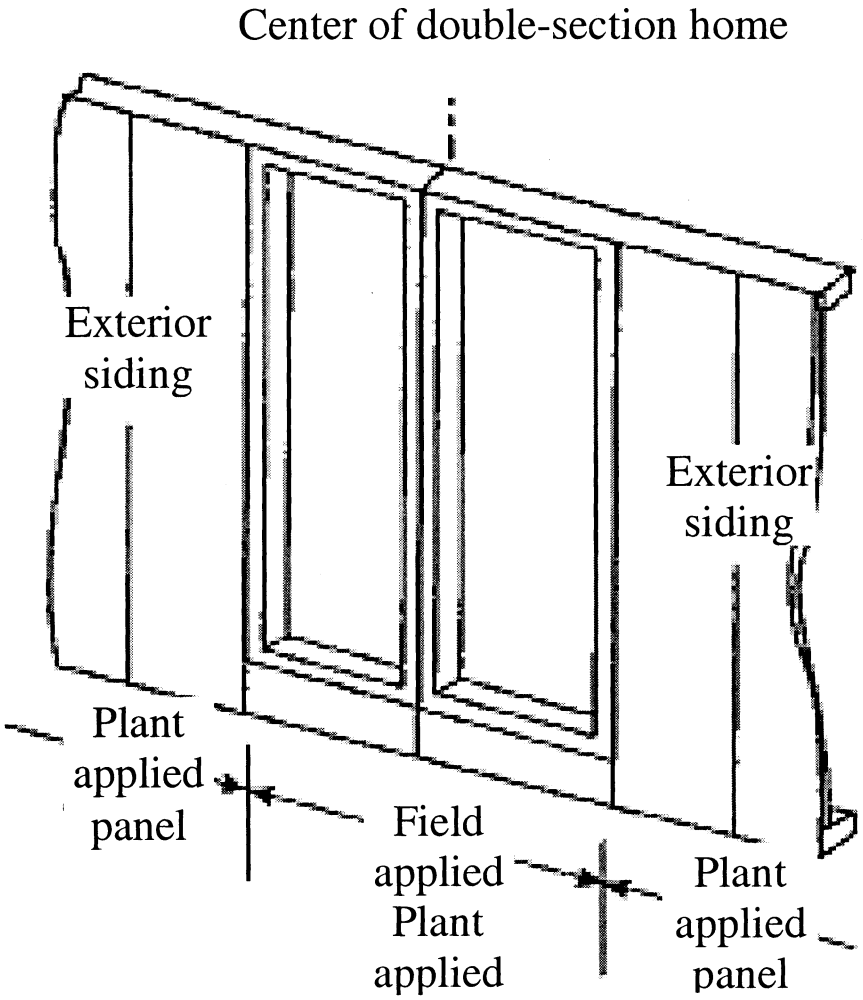

Notes:
1. Specific designs must be approved by a DAPIA and included in the home manufacturer installation instructions.
2. Fasten exterior panel to the studs in accordance with the home and siding manufacturer installation instructions.

§ 3285.804 Bottom board repair.

(a) The bottom board covering must be inspected for any loosening or areas that might have been damaged or torn during installation or transportation.

(b) Any splits or tears must be resealed with tape or patches specifically designed for repairs of the bottom board.

(c) Plumbing P-traps must be checked to be sure they are well insulated and covered.

(d) All edges of patches must be taped.

Subpart J—Recommendations for Manufacturer Installation Instructions

§ 3285.901 Recommendations for manufacturer installation instructions.

(a) The planning and permitting processes as well as utility connection requirements are outside of HUD's authority and may be governed by LAHJs. Therefore, these Model Installation Standards do not attempt to comprehensively address such requirements.

(b) *Variations to manufacturer installation instructions.* When an installer does not provide support and anchorage in accordance with the approved manufacturer installation instructions or encounters site or other conditions that prevent the use of the instructions, the installer must obtain and use a design by a registered professional engineer or registered architect for the support and anchorage of the manufactured home that uses the design loads of the Manufactured Home Construction and Safety Standards and provisions for the specific site or other conditions.

(c) Certain provisions must be addressed by manufacturer installation instructions in order to protect the manufactured home as constructed in accordance with the MHCSS. Manufacturer installation instructions must strongly recommend the following cautions to installers that address the provisions of this subpart.

§ 3285.902 Moving manufactured home to location.

The manufactured home is to be moved to the site and placed on the site when the site is prepared in accordance with subpart C of this part and when the utilities are available as required by the LAHJ.

(a) *Access for the transporter.* Before attempting to move a home, it must be ensured that the transportation equipment and home can be routed to the installation site and that all special transportation permits required by the LAHJ have been obtained.

(b) *Positioning the home.* The home must be installed and leveled by a certified installer.

(c) *Encroachments and setback distances.* LAHJ requirements regarding encroachments in streets, yards, and courts must be obeyed, and permissible setback distances from property lines and public roads must be met.

(d) Fire separation distances must be in accordance with the more stringent requirements of the LAHJ or Chapter 6 of NFPA 501A.

§ 3285.903 Permits, alterations, and on-site structures.

(a) *Issuance of permits.* All necessary LAHJ permits must be obtained and all fees must be paid.

(b) *Alterations.* Prior to alteration of a home installation, the LAHJ must be contacted to determine if plan approval and permits are required.

(c) *Installation of on-site structures.* (1) All buildings, structures, and accessory structures must be designed to support all of their own live and dead loads.

(2) Fire separation distances must be in accordance with the more stringent requirements of the LAHJ or NFPA 501A.

(3) Any attached garage, carport, deck, or porch must be installed according to the home manufacturer installation instructions or be designed by a registered professional engineer or registered architect as approved and required by the LAHJ.

§ 3285.904 Drainage structures.

If acceptable to an LAHJ, ditches and culverts may be used to drain surface runoff. Such provisions are subject to all requirements of an LAHJ and must be included and considered in the overall site preparation.

§ 3285.905 Utility system connections.

(a) *Proper procedures.* The LAHJ must be consulted before connecting the manufactured home to any utilities.

(b) Where required, only qualified personnel familiar with local requirements must be permitted to make utility site connections and conduct tests.

(c) *Drainage system.* The main drain line must be connected to the site's sewer hookup, using an elastomer coupler acceptable to the LAHJ, as shown in Figure to § 3285.905.

Figure to § 3285.905 - Connection to Site Sewer.

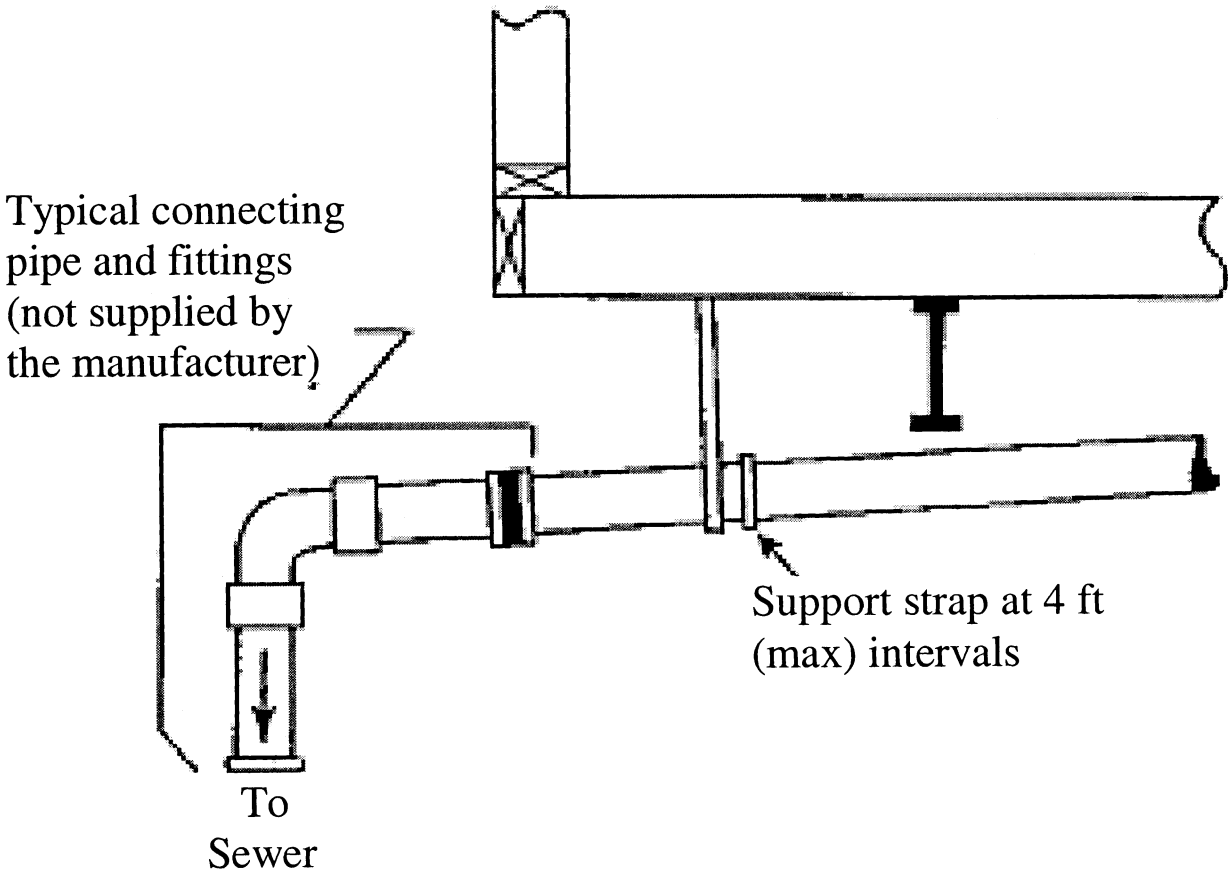

Note:

Fittings in the drainage system that are subject to freezing, such as P-traps in the floor, are protected with insulation by the manufacturer. Insulation must be replaced if it is removed for access to the P-trap.

BILLING CODE 4210–27–C

(d) *Fuel supply system.* (1) *Conversion of gas appliances.* A service person acceptable to the LAHJ must convert the appliance from one type of gas to another, following instructions by the manufacturer of each appliance.

(2) *Orifices and regulators.* Before making any connections to the site supply, the inlet orifices of all gas-burning appliances must be checked to ensure they are correctly set up for the type of gas to be supplied.

(3) *Connection procedures.* Gas-burning appliance vents must be inspected to ensure that they are connected to the appliance and that roof jacks are properly installed and have not come loose during transit.

(4) *Gas appliance startup procedures.* When required by an LAHJ, the installer must perform the following procedures:

(i) One at a time, equipment shutoff valves must be opened, pilot lights when provided must be lit, and burners and spark igniters for automatic ignition systems must be adjusted in accordance with each appliance manufacturer instructions.

(ii) The operation of the furnace and water heater thermostats must be checked.

§ 3285.906 Heating oil systems.

(a) Homes equipped with oil burning furnaces must have their oil supply tank and piping installed and tested on site in accordance with in accordance with

NFPA 31 or the more stringent requirements of an LAHJ.

(b) The oil burning furnace manufacturer instructions must be consulted for pipe size and installation procedures.

(c) All oil storage tanks and pipe installations must meet all applicable local regulations.

(d) *Tank installation requirements.* (1) The tank must be located where it is accessible to service and supply and safe from fire and other hazards.

(2) In flood hazard areas, the oil storage tank must be anchored and elevated to or above the design flood elevation, or anchored and designed to prevent flotation, collapse, or permanent lateral movement during the design flood.

(3) *Leak test procedure.* Before the system is operated, it must be checked for leaks in the tank and supply piping in accordance with NFPA 31 or more stringent requirements of an LAHJ.

§ 3285.907 Telephone and cable TV.

Telephone and cable TV wiring are not covered by these Installation Standards and must be installed in accordance with requirements of the LAHJ.

Dated: March 18, 2005.

John C. Weicher,

Assistant Secretary for Housing—Federal Housing Commissioner.

[FR Doc. 05–7497 Filed 4–25–05; 8:45 am]

BILLING CODE 4210–27–P

Federal Register

Tuesday,
April 26, 2005

Part III

Department of Transportation

Federal Aviation Administration

14 CFR Part 23, et al.

Security Considerations on the Flightdeck of Transport Category Airplanes; Proposed Rule

DEPARTMENT OF TRANSPORTATION

Federal Aviation Administration

14 CFR Parts 23, 25, 121, and 129

[Docket Nos. 2002–11032; 2002–12504, and 2003–15653]

RIN 2120–AI54 (Formerly 2120–AH56), –AH70, and –AH96

Security Considerations on the Flightdeck of Transport Category Airplanes

AGENCY: Federal Aviation Administration (FAA), DOT.

ACTION: Disposition of comments on final rule.

SUMMARY: Since the September 11, 2001 terrorist attacks, the agency has published six amendments and has held one public meeting on standards for reinforcing flightdeck doors. The FAA sought public comments for each amendment, but all six were effective immediately on publication. The agency disposed of some comments that related specifically to the reinforced door requirements in later amendments. This action disposes of the remaining comments.

ADDRESSES: You may review the public dockets (Docket Nos. 2002–11032, 2002–12504, and 2003–15653) in the Dockets Office between 9 a.m. and 5 p.m., Monday through Friday, except Federal holidays. The Dockets Office is on the plaza level of the Nassif Building at the Department of Transportation, Room Plaza 401, 400 Seventh Street, SW., Washington, DC 20590–0001. Also you may review the public docket on the Internet at *http://dms.dot.gov*.

FOR FURTHER INFORMATION CONTACT: For part 25 issues, contact Jeff Gardlin, Airframe and Cabin Safety Branch (ANM–115), Transport Airplane Directorate, Aircraft Certification Service, Federal Aviation Administration, 1601 Lind Avenue, SW., Renton, Washington 98055–4056; telephone (425) 227–2136, facsimile (425) 227–1149, e-mail: *jeff.gardlin@faa.gov*. For part 121, contact Joe Keenan, Air Carrier Operations Branch (AFS–220), Flight Standards Services, Federal Aviation Administration, 800 Independence Avenue, SW., Washington, DC 20591; telephone (202) 267–9579; facsimile (202) 267–5229; e-mail: *joe.keenan@faa.gov*. For part 129, contact Marlene Livack, International Programs & Policy Office (AFS–50) 800 Independence Avenue, SW., Washington, DC 20591, telephone (202) 385–4678;, facsimile (202) 385–4561, e-mail: *marlene.livack@faa.gov*.

SUPPLEMENTARY INFORMATION:

Background

On September 11, 2001, the United States experienced terrorist attacks when aircraft were commandeered and used as weapons. These actions demonstrated a need to improve the design, operational, and procedural security of the flightdeck. On November 19, 2001, Congress enacted Public Law 107–71, the Aviation and Transportation Security Act (the Act), which specifies that improved flightdeck security must be applied to aircraft operating in passenger or intrastate air transportation. Section 104 of the Act directed the FAA to issue a final rule, without seeking public comment prior to adoption addressing the security requirement for aircraft that are currently required to have flightdeck doors.

As a result, the FAA issued a series of Special Federal Aviation Regulations (SFAR 92) and four final rules without notice, and held a public meeting.

- Special Federal Aviation Regulations (SFAR–92) (66 FR 51546, October 9, 2001; 66 FR 52835, October 17, 2001; 66 FR 58650, November 21, 2001; and 67 FR 12820, March 19, 2002; Docket No. FAA–2002–10770) first allowed, and then required, the installation of internal locking devices on the flightdeck doors.
- On January 15, 2002, we amended Title 14, Code of Federal Regulations (14 CFR) parts 25 and 121 to set new standards for flightdeck doors (Amendment Nos. 25–106 and 121–288; 67 FR 2118; Docket No. FAA–2002–11032). Section 25.795 was amended to set standards for reinforcing flightdeck doors. The new standards require them to resist forcible intrusion and ballistic penetration. Section 121.313(f) was amended to mandate installation of the reinforced doors on certain airplanes not later than April 9, 2003. The affected airplanes included transport category all-cargo airplanes operated under part 121 which had flightdeck doors installed on or after January 15, 2002.
- On June 21, 2002, the FAA amended 14 CFR part 129 to apply similar standards to foreign operators operating into the United States (Amendment No. 129–33; 67 FR 42450; Docket No. FAA–2002–12504). Section 129.28 requires installation of the reinforced door not later than April 9, 2003. The affected airplanes include transport category all-cargo airplanes operated under part 129 which had flightdeck doors installed on or after June 21, 2002. A public meeting to address the amendment was held on July 30.
- On December 23, 2002, we amended part 129 as a result of input received from a public hearing held on July 30, 2002, and comments received as a result of the rulemaking (Amendment No. 129–36; 67FR79822; Docket No. FAA–2002–12504). The amendment clarifies the applicability of the part 129 regulations for foreign operators.
- On July 18, 2003, the FAA issued Amendment Nos. 121–299 and 129–38. These amendments provided an alternative means of compliance to operators of all-cargo airplanes that are required to have a reinforced security flightdeck door. The rule allows operators of large cargo airplanes to either install reinforced flightdeck doors or adopt enhanced security procedures approved by the Transportation Security Administration. We also changed the cargo portion of the rule to replace the April 9, 2003, compliance date with October 1, 2003, to correspond to section 355 of the Consolidated Appropriations Resolution, Public Law 108–7.

In Amendment Nos. 121–299 and 129–38, the FAA also disposed of some comments that had been received for the earlier amendments that related specifically to the reinforced door requirements. At that time, we indicated that we would respond later, in a separate document, to all other comments. This action represents that document.

Discussion of Comments

Amendment Nos. 25–106/121–288 (Parts 25 and 121)

Thirty-two commenters, representing airlines, aerospace manufacturers, a labor organization, and individuals, responded to the request for comments. Two of these commenters submitted comments directly to the FAA without entering them in the public docket because of their security-sensitive nature; their comments will not be discussed for that reason. Some comments that were submitted before the regulation and associated advisory were published *(http://www.faa.gov/regulations/)* were actually addressed in those documents. These comments address cargo operations, applying the rule more broadly, the performance standards test methods, inflight access to the flightdeck, and the availability of advisory material. Comments also address the FAA's assessment of the cost of the rule.

Cargo Operation

Ten commenters address the need to extend the requirements for flightdeck door improvements to all-cargo operations.

• *Comment:* Commenters were divided on whether (1) the current requirements should be extended to any all-cargo airplane operating in part 121 service, or (2) the current requirements should be rescinded for all-cargo airplanes that have flightdeck doors installed and carry persons aft of the flightdeck.

Response: The FAA believes the proponents of each argument make many good points on an issue that is not simple. We believe that (1) all-cargo operations need to be treated consistently, and (2) improvements in security are necessary for all-cargo operations that permit the carriage of persons, whether on the flightdeck or aft of it. For reasons of security, the details surrounding all the issues will not be discussed here. However, based on all available information, the FAA adopted Amendment Nos.121–299 and 129–38, which permit operators to adopt security programs, in lieu of installation of a reinforced flightdeck door in certain situations. Regardless of whether the operator has a flightdeck door installed on its airplanes, the operator is still subject to security requirements of the TSA and FAA. These actions were taken in coordination with the Transportation Security Administration (TSA) and are discussed further elsewhere in this document.

Rule Applicability

Three commenters address extending the existing standards to other types of airplanes operating in part 121 service.

• *Comments:* Two commenters state that improved flightdeck doors were impractical for other than transport category airplanes, and would not have a practical impact on security in any case. They point out that many of these airplanes do not have separate flightdecks and, on those that do, the structure necessary to support a reinforced flightdeck door is not present. They note that emergency egress from these airplanes is frequently predicated on there being no obstacle between the flightdeck and emergency exits, and the installation of flightdeck door would compromise egress. Similarly, these commenters note that other airworthiness requirements (such as accommodating rapid decompression) would be very difficult to address were a flightdeck door installed where none previously existed.

• One commenter encourages adoption of similar standards for commuter category airplanes (part 23). He argues for an equivalent approach to security for airplanes operating in commercial passenger service.

Response: After extensive discussion with the TSA to determine the threat/risk present and the most appropriate method of mitigation, we do not plan to extend the requirements for reinforced flightdeck doors beyond their current applicability. If additional action is needed to extend these requirements to commuter category airplanes, we will do so in separate rulemaking, and we will address any egress problems.

• *Comment:* One commenter proposes 75,000 pounds as the lower weight limit on airplanes required to comply with this requirement.

Response: The FAA disagrees. The proposed weight limit would exclude a large number of significant size regional jets and airplanes operating in part 121 service. As discussed in the preamble, the FAA has already established the need for a door between the flightdeck and the passenger cabin and includes airplanes less than 75,000 pounds. Certain airplanes should have flightdeck doors, and this requirement establishes performance criteria for those doors. To arbitrarily establish a weight limit for incorporation of the performance requirements would diminish the effect of the rule and reduce the overall level of safety and security.

Performance Standards

Six commenters address the severity of the standards for intrusion and ballistic penetration resistance. These commenters state that one or both standards were not severe enough.

• *Comment:* Commenters addressing the intrusion requirements point out that there are ways to achieve higher than a 300 Joule (300J) impact, and that the existing standard might not be adequate. One commenter at the FAA public meeting on flightdeck security for foreign operators questioned the adequacy of tension load requirements and stated that the values required could easily be exceeded.

Response: We considered several factors in establishing the requirement at 300 Joules. Based on the comments, we revisited the standard and have concluded that it is adequate. First, the rule requires that the impact be applied on very localized areas of the door. In virtually all instances where higher than 300J could be exerted, the impact would be spread over a greater area, effectively reducing the severity of the impact locally. Second, as noted in the rule, the intent of the requirement is not to make the door impenetrable, but to significantly add to its ability to resist an intruder, until other measures can be taken. Given the measures necessary to actually generate more than 300J, the FAA is confident that the current standard provides the level of protection necessary to satisfy the intent of the requirement and significantly upgrade security and safety.

Regarding the tension load requirement, it is possible to exert a higher force on the doorknob or handle in some cases; however, the FAA has concluded that this is not a practical concern. The installation configuration of flightdeck doors on airplanes and the basic frangibility of the doorknob does not compromise the intrusion resistance of the door.

• *Comment:* One commenter suggests that the standard be modified to address a time element *i.e.*, duration of an attack.

Response: We expect other measures would be invoked before an intruder could sustain a prolonged attack on the door. In addition, such a requirement is not suitable as a certification standard unless a quantifiable way of measuring performance can be standardized. The FAA is unaware of any such standard and, given the severity of the impact and tension load requirements, is satisfied that the existing intrusion standard is adequate.

• *Comment:* One commenter suggests modifying the ballistic penetration standard to require testing in conditions of extreme humidity. The commenter notes that many ballistic materials can lose their performance characteristics when wet, and is concerned that issue is not being addressed.

Response: Prolonged exposure to very high humidity can affect ballistic performance. This is not, however, a practical concern for commercial airplanes. To the degree that humidity does vary in the airplane, it is typically very low, and any exposure to higher humidity would be for far shorter times than would be necessary to noticeably affect the performance of the material. The FAA does not plan to change the standard.

• *Comment:* One commenter objects to the language in Advisory Circular 25.795–2, which notes that protrusion of the bullet (*i.e.*, partial penetration) is acceptable, as long as no penetration occurs. The commenter suggests that bullets should not be allowed to protrude through the door.

Response: We do not agree. As long as no penetration of the bullet or fragments occurs, the door will have met its objective. From a certification standpoint, this is a readily achievable standard that does not require interpretation. On the other hand, a

''partial protrusion'' could be interpreted in many ways and could lead to non-standardized application of the requirement, for no real gain in safety.

• *Comment:* Two commenters believe that the ballistic and intrusion requirements should be considered in combination with each other, or with other failures. These commenters believe that the standard should require, for example, that the door retain its intrusion and ballistic resistance after the airplane experiences a rapid decompression. The commenters suggest that the scenario whereby the airplane experiences a rapid decompression and is subsequently targeted for terrorist action is sufficiently likely to require regulatory action.

Response: We do not agree. A rapid decompression sufficient to compromise the integrity of the flightdeck door is a very severe and infrequent event. The likelihood of this event, coupled with an intruder on board, is extremely small. If the airplane experiences such rapid decompression, it is unlikely that an intruder would be able to carry out an action against the airplane because of the resultant damage that would affect the flying conditions.

Finally, the practicality of designing a door that would provide adequate venting for rapid decompression while still being intrusion and ballistically resistant is questionable at best. Satisfying decompression requirements without consideration of maintaining security proved to be a very difficult certification issue; the FAA doubts that such designs could be implemented in a timely manner, if at all. With regard to whether the intrusion and ballistic requirements should be considered in combination with each other, the FAA notes that the current requirements are focused on preventing intrusion into the flightdeck. As such, the ballistic requirements include consideration of any failure that would permit the door to be opened, in addition to the penetration resistance of the door itself. The FAA considers that this provision adequately addresses the existing fleet and will provide a high level of security. For future airplanes, the FAA will consider the need to require penetration resistance following tests for intrusion. Such a requirement would be more practical on new airplanes than for a retrofit application and, while the improvement in security is likely to be small, such designs may be more readily developed for a new design with minimal cost.

Emergency Access to the Flightdeck

One commenter addresses the requirement for inflight access by flight attendants in the event the crew becomes incapacitated.

Response: In accordance with § 121.587(b), certificate holders are already required to have FAA-approved procedures for opening, closing, and locking the flightcrew compartment door. These procedures may include the use of an FAA certificated electronic access system. While the use of highly sophisticated systems for flightcrew compartment access is not presently required, many certificate holders have elected to use these systems voluntarily. The FAA has concluded that the current requirements are sufficiently safe as written, and no change is necessary.

Advisory Material

Four commenters addressed the advisory material.

• *Comment:* One commenter that filed comments before the FAA issued the regulation and advisory materials states that language in draft advisory material reflects a product bias. He recommends that such language be changed. A trade association commenter supports this position.

• *Response:* The FAA modified the final version of the advisory material to reflect more generic language, although there was never any intended endorsement of one product type over another. No further comments on this topic were received during the comment period.

• *Comment:* Two commenters request additional advisory material. One commenter requests an advisory circular (AC) to address the access systems discussed above. The other commenter requests advisory material on minimum requirements for dispatch with regard to the performance of the flightdeck door.

Response: Before issuing the rule, the FAA maintained a guidance memorandum and a list of ''frequently asked questions.'' (*See* Web site at: *http://www.airweb.faa.gov/Regulatory_and_Guidance_Library/rgPolicy.nsf/0/324ED6824765F7ED86256E600053490F?OpenDocument.*) This memorandum effectively serves as advisory material for the access system. The FAA will consider whether a dedicated AC is needed for the access system, however, there is no current plan for a separate AC.

The FAA has also developed a policy for use by the Flight Operations Evaluation Boards that establishes Master Minimum lists that the operators use to determine acceptable dispatch configurations. This document is available at *http://www.opspecs.com* to all interested parties and satisfies the request for guidance.

Other Designs

• *Comment:* Two commenters state that a double door arrangement, creating a chamber between the two doors outside the flightdeck should be required. One commenter proposes designs for such an arrangement, while one commenter refers to similar configurations used by a foreign airline.

Response: We do not agree. Using two flightdeck doors will typically magnify all other compliance issues, as discussed in the preamble. In particular, venting for rapid decompression, emergency egress, and smoke evacuation would be much more difficult to address with two doors instead of one. The principal advantage of a double door arrangement is that it separates the flightdeck from the cabin and both doors would not have to be open at the same time.

With regard to the foreign operator that has this arrangement, the FAA notes that this is a voluntary configuration that is used on only one aircraft type. In addition, that operator has experienced problems in satisfying certification requirements. While the FAA acknowledges that such designs are possible, to retrofit them into existing airplanes would be very complicated and would require a longer compliance time than is considered prudent. For new airplanes, such designs might be more feasible, and the FAA will consider whether the benefits of a double door arrangement would outweigh the costs in any future rulemaking. At this time, however, no action is planned.

Flightdeck Bulkhead

• *Comment:* Two commenters propose that the bulkhead that separates the flightdeck from the passenger cabin be subject to the same standards as the flightdeck door.

Response: The FAA agrees and is in the process of proposing requirements to adopt the same standards into part 25 that are currently required for the flightdeck door. This requirement would apply to new type design and would not require retrofit. For the existing fleet, the flightdeck door represents the most significant security weakness. The bulkheads are typically much more substantial and contain equipment and features on the flightdeck that provide inherent protection. While it would undoubtedly be an improvement to apply the same standards to the bulkheads of airplanes

in the existing fleet, the FAA concludes that this modification would be very difficult and expensive for an incremental improvement in security. To the extent that an operator can accomplish this modification readily on a particular airplane type, the FAA would encourage it to do so.

Funding

• *Comment:* Two commenters state that, since certain cargo operators are being required to modify airplanes, they should be eligible for reimbursement from government funding.

Response: While not strictly relevant to this rulemaking, part 121 cargo operators were eligible for reimbursement.

Amendment No. 121–299 (Part 121)

Eight commenters responded to the final rule request for comments: four individuals, one cargo airline association, one cargo airline holding company, one U.S. cargo airline, and one foreign cargo airline. Comments generally were supportive of the rule. They addressed security procedures and screening, door installation costs, surveillance cameras, the rule compliance date, and applicability.

Security Procedures and Screening

• *Comment:* One individual suggests that security measures should be as effective and enforced as stringently for all cargo operations as they are for passenger operations and that security screening would be more effective than hardened doors.

Response: Security screening procedures for cargo operations are different from those used for passenger flights because of the limited number of occupants permitted on board and the airport environment into which cargo airplanes operate. This rule provides operators with an option of upgrading flightdeck doors or adopting a TSA-approved security program.

• *Comment:* One commenter recommends increasing the number of personnel that would be responsible for ensuring only authorized persons are granted access to operational areas and the aircraft. Another commenter suggests arming the pilots.

Response: Air cargo operators are already performing screening measures for the limited number of occupants allowed on all-cargo airplanes. Requiring a new crewmember position, such as a security guard, is beyond the scope of this rule. Arming of pilots in all-cargo operations is underway in accordance with Section 609 of Public Law 108–76.

• *Comment:* A cargo airline holding company requests the FAA provide more specificity about the nature of the security procedures. The commenter states: (1) The TSA has, in effect, nullified an FAA regulation conferring specific benefits on carriers and criticizes TSA's action as likely to erode the business opportunities for a number of carriers, create a discriminatory regulatory environment that disadvantages some carriers, and favor others; (2) the FAA should reinforce its intent by publishing a supplemental notice advising the TSA to develop security based procedures for carriers, rather than requiring reinforcing flightdeck doors; and (3) each carrier should be permitted to tailor its procedures to its particular operation.

Response: The FAA responds in the following manner: (1) We do not agree that the TSA security program required by this rule has nullified an FAA regulation or created a discriminatory environment within the air cargo industry; (2) while the FAA collaborates with the TSA on matters that concern both organizations, the TSA makes the final determination concerning content of security programs that are subject to their approval; and (3) the TSA-approved program contains a provision for air carriers to request alternative procedures to those specified in the program.

Surveillance Cameras

• *Comment:* Two individual commenters suggested installation of a video system or monitor that would allow the flightcrew to see an individual requesting entry onto the flightdeck. One individual commenter suggested that installation of surveillance cameras would be more cost effective than installation of a door.

Response: The FAA does not oppose the use of video monitoring systems.

Use of surveillance cameras implies installation of a flightdeck door, or similar barrier, if one does not already exist. The FAA did not mandate a video system in addition to a flightdeck door in this rule. Most flightdeck doors have a viewing device that permits the crew to see a person in the area outside the flightdeck door before allowing access.

Compliance Date

• *Comment:* A cargo airline states its vendor would not be able to meet the October 1, 2003, deadline and asks about options for all-cargo operators beyond the deadline date.

Response: For security reasons, the FAA did not extend the compliance deadline.

Applicability to Fleet

• *Comment:* A cargo airline association opposes the requirement for a TSA security program to apply to all airplanes in an operator's fleet, including those with hardened doors, if a single airplane within that fleet requires the security program. The commenter requests the FAA amend the rule to apply to an individual aircraft, rather than an entire fleet of that aircraft type.

Response: The FAA disagrees. The FAA rule requires a hardened door or implementation of an approved TSA security program. Under Title 49 CFR 1544, 1546, and 1550.7(b), the TSA security program requires all all-cargo operators to have a TSA-approved program applicable to every all-cargo aircraft in its fleet. Accordingly, because the FAA rule is based on the TSA security program, and the security program applies to all all-cargo aircraft in a fleet, the FAA does not intend to amend this final rule.

Amendment Nos. 129–33 and –36 (Part 129)

Thirty-seven commenters responded to the part 129 final rules and July 30 public meeting. Most commenters support the rule. Commenters included airline and pilot associations, air carriers, and individuals. They addressed security, the rule compliance date, harmonization efforts with foreign authorities, access to the cockpit, requirements for reinforced doors on all-cargo airplanes, and cost and funding.

Balanced Approach to Security

• *Comment:* One association cautions against discarding all previous procedures and solutions that served well before the September 11 terrorist attacks. The commenter recommends solving the problem on the ground by screening passengers, staff, luggage, cargo, and equipment. The commenter suggests balancing safety, security, and financial concerns proportionately so the security costs do not hinder people from flying and or the security process does not dampen their desire to fly.

Response: The FAA and the TSA have worked together on risk and threat assessments to determine applicability of proposed security requirements to airplane design and operation. For the last several years, we focused attention on the certification and installation of reinforced flightdeck doors. We, however, are working other security related initiatives as well. Both the FAA and the TSA expect to continue to coordinate closely to ensure a systemic approach to aviation security.

Coordination and Harmonization by Regulatory Authorities

• *Comment:* Three commenters, including two associations and one operator, ask that, before introducing more legislation, the European Union, the United States, and the ICAO coordinate more with foreign governments, operators, and stakeholders, including part 129 air carriers.

One of the associations states it believes that States must work together in a cooperative manner, with input from the industry to ensure harmonized implementation of globally recognized standards.

Response: The FAA currently does, to a great extent, and will continue to work and coordinate with other regulatory authorities on standards and recommended practices.

Authority To Grant Access to the Cockpit and Operational Procedural Requirements for Locking the Door

• *Comment:* One association suggests the need for additional training and operations procedures to include communications and a way to visually monitor the area adjacent to the cockpit door. The commenter states that the cockpit door is one of the emergency exits and that new technical procedures and solutions must not hinder the emergency operation.

Response: We agree and recognize that good communications and interaction between the flightcrew and cabin attendants has a positive influence on flight safety and security. A closed and locked door, however, can be a challenge to effecting good communications. Thus, the FAA currently requires training and operations procedures to include communications and a way to visually verify the identity of an individual prior to granting access to the flightdeck for U.S. airlines. The FAA also requires foreign air carriers to have procedures in place to prevent access to the flightdeck that are acceptable to the national authority having oversight.

The FAA is considering rulemaking to propose requirements for visually monitoring the area outside and adjacent to the flightdeck and for alerting the flightcrew to any suspected threats and is attempting to harmonize the proposal with other national authorities.

• *Comment:* One association states that the captain should retain final authority on when to lock the door. This same association and one individual commenter state the captain should have discretion on whom to admit to the flightdeck.

Response: The FAA disagrees. The events of September 11, 2001, emphasized the need to maintain the integrity of the flightdeck and command of the aircraft at all costs. In response to the Transportation Security Act, the FAA required operators to adopt operational changes restricting access to the flightdeck in flight. Because of the demands on aviation safety and security, Amendment No. 129–33 adopted § 129.28(d), which required procedures to restrict access to the flightdeck. This action is consistent with Amendment 27 to Annex 6, Part 1 of the ICAO standards, which includes the requirement to lock the flightdeck door.

• *Comment:* One operator states the FAA and manufacturers should ensure that Phase II door designs and procedural requirements are such that the flight crew does not have to vacate control seats to allow entry to the flightdeck and that current Phase II door designs do not cause intrusive noise in the crew rest area.

Response: The FAA agrees that requirements for sleeping quarters must be met, including the procedures associated with entry into the flightdeck. While the rule does not specifically address this issue, since the issue does not relate to flightdeck security per se, each carrier will have to satisfy its national authority that these requirements continue to be met. Up to now, all approvals for long range airplanes include provisions that enable the crew to operate the flightdeck door lock without having to leave their seat. The rule requires part 129 air carriers to have procedures in place, acceptable to the civil aviation authority responsible for oversight, that prevent unauthorized persons access to the flightdeck. As such, the operator has the discretion to install video systems, acceptable to its civil aviation authority, to monitor the areas external to the cockpit and authorize entry to the flightdeck without requiring the pilots to vacate their control seats. ICAO has adopted standards associated with monitoring the area outside the flight deck and discretely alerting the flightcrew of suspected threats.

• *Comment:* One commenter states that § 129.28 should include detailed emergency exit procedures for pilots and that doors should have two-person integrity on all internal locking devices to assure proper security procedures are followed. This commenter also suggests that detailed emergency exit procedures should be included for pilots who are locked behind the reinforced doors in the event of an accident or other emergencies. Finally, the commenter states the proposed rule neglects to cover how authorized persons may exit the flightdeck during abnormal situations.

Response: The flightdeck door is already subject to several requirements that affect its structural integrity, including: protection during decompression, emergency egress considerations, and the capability for rescue personnel to enter the flightdeck in the event the flightcrew is unable to egress on its own. After reviewing several design proposals, the FAA has determined that the requirements can be accommodated by proper door design and installation. As a result aircraft meeting the requirements of this rule should continue to meet all the requirements necessary to maintain a valid certificate of airworthiness from the country of registry.

Requirement To Have a Reinforced Door and Lock the Cockpit Door on All-Cargo Airplanes

• *Comments:* One operator suggests rephrasing § 129.28 (a)(2) and 129.28 (c) to read ''* * * between the pilot compartment and any other compartment when occupied by persons other than those listed in 129.28 (d)(3).'' The operator states this will exclude all-cargo airplanes that carry only persons listed in 129.28 (d)(3) from the requirements to reinforce the door. The operator also states this would solve the issue of conflicting requirements on those all-cargo airplanes (such as the MD–11) equipped with an airworthiness placard requiring that the cockpit door be latched open during taxi, takeoff and landing.

• Another operator states that certification requirements for the MD–11 require the door to remain open during takeoff and landing for emergency egress. This operator asks how it can comply with both the rule and certification requirements when they are in conflict since the rule requires the door to be closed and locked.

Response: The rule, as written, provides the relief suggested by the commenters. If an all-cargo airplane does not have a door, then the entire airplane is defined as a flightdeck. Section 129.28 (d) defines those individuals who can be admitted to the flightdeck. If only those individuals identified in § 129.28(d)(3) are carried on an all-cargo airplane, no door is required. Although this meets the intent of the FAA's regulatory requirement, the TSA may impose additional security requirements on all-cargo airplanes.

Security on All-Cargo Airplanes

Six commenters, including one association and five air carriers recommend that all-cargo airplanes either be exempted from the flightdeck door requirements or that the deadline for implementation be extended. They suggest that the nature of cargo operations is different from passenger operations and actions necessary to enhance flightdeck security can also be different. Several commenters expressed similar concerns as part 121 operators about extending the compliance deadlines.

• *Comments:* One commenter states that all-cargo airlines, especially those operated on a charter basis, pose the least risk of having airplanes used as weapons by terrorists since all-cargo charter operations do not publish a schedule for service. Also, it would be difficult to know in advance when an aircraft would be operated.

• Both the association and one air carrier suggest that it is possible to implement operational and security procedures, such as background checks, to ensure adequate security and provide an alternative means of compliance.

• Two air carriers cite the inconsistency of the regulation because cargo airplanes without flightdeck doors are not subject to the provisions of the regulation. One carrier contends that this inconsistency fails to effectively enhance flightdeck security. The second carrier states the rule places it at a competitive disadvantage against air carriers whose fleet is designed and operated with no doors without improving the security environment. According to the second carrier, the crew exits the flightdeck regularly to visit the galley or lavatory, perform routine inspection, or in the event no flight attendants are available, ensure the area is clear and secure before a flightcrew member exits. The carrier states that in the event of an intrusion when a flightcrew member is absent from the flightdeck, a reinforced door will prevent that return to the flightdeck to assist the other flightcrew member(s).

• Another air carrier expressed concern at the July 30, 2002, public meeting, that it would be physically impossible to modify all affected aircraft by April 9, 2003. The commenter suggests making U.S. passenger carriers a higher priority because they present a higher security risk.

• One carrier comments that the FAA did not amend part 121 to require reinforced flightdeck doors on all cargo operations until Federal Express petitioned it to do so. The commenter indicates and there is no evidence in the public record that the reinforced cockpit door requirement has appreciably increased aircraft security or reduced the threat of a terrorist attack in the U.S. The carrier urges the FAA to develop a policy for granting exemptions to all cargo carriers that have developed enhanced all-cargo security programs that provide for equivalent, or perhaps greater, levels of security than that brought about by the installation of reinforced doors.

• *Comment:* One air carrier states that the purpose of the rule can better be served with less economic impact if the FAA would focus specifically on carriers posing a significant risk and apply the rule with flexibility in light of what carriers can feasibly accomplish. The commenter argues that putting foreign all-cargo carriers on the same timetable as the more risk-prone U.S. passenger carriers may actually compromise security as it may result in some passenger aircraft being delayed in favor of freighter aircraft for which the commenter asserts the flightdeck door retrofit accomplishes very little increase in real security.

Response: The FAA found many of the points made by these commenters to be persuasive. In recognizing that differences exist in the design and operation of all-cargo airplanes, the FAA allowed all-cargo carriers to opt for an alternate means of compliance by adopting enhanced security procedures approved by the TSA in lieu of installing a reinforced door.

• *Comment:* One association indicates that it supports reinforced doors on all cargo aircraft. The commenter cites the following factors that, when combined, increase the opportunity for a terrorists attack: (1) Limited ground security procedures in place at cargo operations versus those in place for passenger carrying operations; (2) company employees carried as ''passengers'' or ''occupants'' on cargo aircraft, have far less scrutiny than fare-paying passengers in common carriage; (3) ramp areas for cargo operations are less controlled than in typical passenger operations; and (4) cargo operations lack the benefit of flight attendant or passenger intervention in the event of an unwanted intruder on an aircraft.

Response: The FAA believes that improvements in security are necessary for all-cargo operations that permit the carriage of persons, whether on the flightdeck or aft of it. For reasons of security, the details surrounding all the issues will not be discussed here. However, based on all available information, the FAA adopted Amendment Nos.121–299 and 129–38, which permit operators to adopt security programs, in lieu of installation of a reinforced flightdeck door in certain situations. These actions were taken in coordination with the TSA and are discussed further elsewhere in this document.

Overflight Operations

• *Comments:* One association believes that an aircraft on an overflight could potentially pose a threat if the aircraft were commandeered. The commenter states that although the FAA does not have the means for surveillance of foreign carriers unless they are on the ground, aircraft conducting overflight of the U.S. operating under part 129 must be required to comply with the requirement to install a reinforced door.

• One air carrier asks if the addition of the word ''overflight'' is intentional in § 129.28.

Response: The FAA excluded overflights in Amendment No. 129.36, in which we state:

> In general, the FAA has no practical means of conducting surveillance of foreign carriers other than on the ground within the United States. Accordingly, we are changing the phrase ''within the United States or on overflights'' to read ''within the United States, except for overflights'' in § 129.28.

The FAA's position does not prevent the TSA or other Federal agencies, from imposing such security requirements.

Editorial and Technical Changes

• *Comments:* One commenter proposes all carriers entering the United States be required to have annual certification for the durability and safe operation of the flightdeck door.

• One commenter suggests § 129.28(c) include that flightdeck door locks be impenetrable by unauthorized keys or other devices.

• One commenter suggests editorial changes to § 129.28(c).

Response: The FAA's intent is to keep requirements consistent with those of parts 25 and 121. Therefore, no changes in wording were made.

• *Comment:* One air carrier suggests using the effective date of the rule, June 21, 2002, as a cockpit door installation reference date instead of January 15, 2002, in § 129.28 (a)(2).

Response: The FAA agrees and the date has been changed by Amendment No. 129–38.

• *Comment:* One commenter recommends including provisions for airplanes being ferried for maintenance to the U.S.

Response: The FAA disagrees because the rule already allows for maintenance ferry flights as long as no passengers are on board.

• *Comment:* One carrier suggests including a termination date of April 8, 2003, for the purposes of the requirements of § 129.28 (a).

Response: The FAA disagrees. The provision that an airplane must have a reinforced door meeting certain resistance and ballistic penetration requirements supercedes the ''Phase 1'' locking requirement for the flightdeck door.

• *Comment:* One commenter supports the intent of the rule but suggests restricting additional items to be carried on board the aircraft. The commenter also suggests that the flightcrew needs an alternative to help the crew without leaving the cockpit.

Response: ICAO has recognized the need for the aircraft crew to operate as a team and provides guidance material for use by airlines in developing training programs that ensure both cabin and flight crews can act in the most appropriate manner to minimize the consequences of unlawful interference. These requirements are outlined in the ICAO standards on training programs. The FAA agrees with this concept and is considering rulemaking to require a means for the cabin crew to discretely notify the flightcrew in the event of suspicious activity or security breaches.

Identification of items prohibited to be carried aboard air carriers is the responsibility of the TSA and is beyond the scope of this rule.

• *Comment:* One air carrier states that the original § 129.13 requires that aircraft carry current airworthiness certificates (COA). The air carrier submits that the new except clause can be read as a waiver to the requirement to carry a COA. The commenter states this would introduce a discrepancy with Article 29 of the Chicago Convention that requires every aircraft used internationally to carry a valid COA.

Response: After September 11, the FAA issued a series of SFARs that first allowed, and then required the installation of internal locking devices on flightdeck doors pending installation of reinforced doors. Section 129.28(a) adopted a requirement for a similar improvement in flightdeck security for foreign air carriers. This requirement was consistent with SFAR 92. As noted in the preamble of the SFARs, the required modifications had the potential to compromise other airworthiness standards. As a result, § 129.28(b) provided relief from the otherwise applicable provisions of § 129.13 only until April 9, 2003, because of the short deadline. Because the FAA does not directly regulate airworthiness of foreign registered aircraft, modifications required by § 129.28(a) may have also required relief from the country of registry. Based on communications with other national authorities, the FAA determined that most were prepared to grant such relief and this amendment should not have created a conflict. In the event a country was not willing to grant such relief, the FAA was prepared to work out a mutually acceptable solution. This issue, however, became moot after April 9, 2003, because § 129.28(b) was only applicable until April 9, 2003 to provide relief from a short deadline. Any requested deviations submitted after April 9, 2003 were handled as a normal deviation request, and not under § 129.28(b).

Business Aircraft and Those With a Seating Capacity of Less Than 20 Passenger Seats

• *Comments:* Two air carriers and one air carrier association urge the FAA to exclude business aircraft and those transport category airplanes originally type certificated with 19 seats or less.

• One association opposes limiting the security requirements based upon size of aircraft or type of mission.

Response: The FAA agrees with the first set of position. Amendment No. 129.36 exempts transport category airplanes originally type certificated with 19 or less passenger seats or transport category all-cargo airplanes with a payload capacity of 7,500 pounds or less from the flightdeck door requirements. This requirement is effectively equivalent to the part 121 requirements for flightdeck security.

The FAA disagrees with the other position for the reasons stated in the preamble of Amendment No. 129–36. Part 129 covers the operational equivalent to both parts 121 and 135 in terms of size of airplanes used and scope of operations conducted. The FAA's intent was to have consistent flightdeck security requirements for parts 121 and 129. The application of the current requirement is effectively equivalent to airplanes of the same size as those used in part 121 operations. The FAA has not applied the flightdeck security requirements to carriers operating under part 135 in the United States and did not intend for the requirements to be extended to the types of airplanes operated under part 135.

Funding for New Security Requirements

• *Comment:* One airline association commented that it believes governments have direct responsibility for aviation security and it's funding to include protection of citizens. The association states that the security threat against airlines is a manifestation of the threat against the state and, therefore, the cost of aviation security should be borne by the states from general revenues and not from user fees.

Response: Discussion of funding is beyond the scope of this rule.

Costs of Reinforcing the Flightdeck Doors

Ten commenters, representing airlines, manufacturers, and associations, address the FAA's estimated cost. (**Note:** In response to the comments it received on the first rule, the FAA increased its estimate of the costs of the security doors in the later rulemakings.)

• *Comments:* All the commenters state the initial estimate of $12,000 to $17,000 was too low. Two state a door kit for a B–747–200 costs between $190,000 and $195,000. One states that a door kit for a B–747–400 costs $38,500. Three report that the cost of a door kit for a widebody is $39,000. Six state that the cost of a door kit for a narrowbody is between $23,000 and $40,000.

Response: When we initially estimated the security door kit cost, no security doors had been certificated to the new standards. Consequently, our estimate was based on preliminary responses from potential vendors. Subsequently, in the final rule for large cargo airplanes, the FAA revised its estimated cost for the security door kit to be between $42,000 and $50,000 for a narrowbody airplane, $50,000 and $60,000 for a widebody airplane, and $210,000 for a B–747–100/200/300. By way of comparison, a non-security flightdeck door costs about $5,600.

The difference between our initial cost estimate and the current security door kit prices can be largely attributed to technological complexities that were not anticipated and to additional door features that are not required by the final rule. One technological complexity is the safety issue associated with flightdeck decompression situations. Coping with this complexity required more design and bulkhead modification than the FAA had anticipated. Similarly, the amount of destructive testing necessary to certificate the doors and the amount of these costs to recover from the kit prices were greater. However, security door kits also contain items beyond the requirements of the rule (e.g., remote keypad entry systems) that make the door kit price greater than the cost necessary to meet the new standards. As a result, although the kit prices overestimate the actual cost of a door that would meet the FAA requirements, the prices in the previous paragraph are those faced by the

operators, notwithstanding volume discounts for bulk purchases.

Labor Cost of Door Installation

• *Comment:* An individual commenter states all [flightdeck] doors should be corrected, saving money in the long run. The commenter goes on to state that airlines are already spending money on security and that either option will result in expenditure.

Response: Most commenters state their support of a security program as an alternate means of compliance for cargo airline security requirements. However, a hardened door remains available as an option to operators that elect to take this course of action.

• *Comment:* One individual disagrees that a cost savings will be realized by a security program, but asks who will pay for security screening.

Response: As indicated in the rule, if all airlines in the cargo industry chose to develop a TSA approved security program instead of installing hardened flightdeck doors, operators will save a total of about $68.117 million between 2003 and 2013. Should an individual operator, however, determine that it is more advantageous to install a hardened flightdeck door, the operator has the option to do so. Security screening is covered by TSA regulations and not addressed in this rule.

• *Comment:* A cargo airline asked how the new security program implementation would be funded. The commenter states that a large air cargo airline would require, on average, about $250,000 initially, with annual costs of about $120,000.

Response: This rule does not provide funding for security programs.

• *Comment:* Six commenters indicate the FAA's initial estimate of labor cost of $3,000 is too low and that the retrofit and installation cost should be between $3,000 and $50,000 per door.

Response: We agree that our initial labor cost estimate was too low. We believe, however, that most of the commenters overestimated the amount of hours needed to retrofit flightdeck doors. In Amendment No. 121.299, the FAA determined that it takes between 72 and 96 labor hours (at a cost of $5,760 to $7,680) to install and fully test reinforced doors and associated systems for most airplanes. It takes about 172 hours ($13,760) to retrofit a B–747–100/200/300. However, the FAA now estimates that retrofitting an Airbus widebody takes between 250 to 300 labor hours (a cost of $20,000 to $24,000).

Number of Out-of-Service Days

• *Comments:* The FAA had initially estimated that retrofitting the security doors would involve 1 out-of-service day. In Amendment No. 121.299, the FAA revised the estimate to 2-to 4-out of service days. Two commenters state that it would take about 10 days or less to retrofit the door electrical system and the bulkhead reinforcement vent for Airbus twin aisle airplanes. Another commenter states that it would take 6 to 7 days of down time to complete the retrofit on the Airbus twin aisle airplanes. Another commenter states that it will take 4 days to retrofit its B–747–400s. A final commenter states that it was taking 3 days to retrofit their single aisle airplanes although they hoped to be able to reduce that to 2 days.

Response: The FAA agrees that its initial estimate of 1 out-of-service day was too low. As installers became more familiar with the procedures, the vendors and some airline maintenance supervisors told us that 2 days out of service was their experiences for Boeing airplanes, other than the B–747–100/200. Those B–747s were taking 6 to 8 days to install because the weight of the doors was too much for the first level ceiling to support and the ceiling needed to be reinforced. We disagree with the 10-day estimate for Airbus airplanes. These same individuals told us that it took them 4 days to install the doors on Airbus airplanes. At the time of the comments, the security door kits were months from being certificated and significant installation issues had not been answered at that time.

Value of Out-of-Service Time

• *Comments:* One association comments that one of its member carriers loses $350,000 per out-of-service day. Another commenter reports that it costs $140,000 per day in parking fees and lost revenue to ground one of its airplanes. Another commenter states that the out-of-service losses will be greater than the costs to retrofit the security doors.

Response: The FAA has used an average lease rate for the various airplanes models to proxy the losses to the aviation system from taking an airplane out of service. These daily rates range from about $4,750 to $14,000—depending on the airplane model. We disagree with the magnitudes of these losses because the reported losses do not consider offsetting gains. For example, while individual airline A loses revenue on the day its airplane is grounded, rather than canceling their trips, most of the passengers will re-book their flights on airline B or on another Airline A flight. When airline B grounds its airplane, most of those passengers will re-book their flights on airline A or on another airline B flight rather than canceling the trip. These subsequent offsetting gains are not accounted for in the reported out-of-service time costs. Thus, when the entire airline as a whole is considered over the period of compliance, the losses are not as large as those reported in the comments.

Total Fleet Retrofitting Cost

• *Comment:* One association estimates a total cost of $30 million for the door kits and labor to retrofit its members' 632 affected airplanes.

• *Response:* We agree. The average cost per airplane is about $47,750, which is a reasonable estimate.

Maintenance and Fuel Costs

Comment: One airline states that it would incur an annual cost of $50,000 for maintenance and fuel costs due to these security doors.

• *Response:* We agree. It is early in the life history of these doors and the need to replace or repair them any more frequently than the doors they replaced is unknown. Given that unknown aspect, in the cargo airplane final rule, the FAA conservatively assumed that the door is replaced every 5 years for an average annual maintenance cost of $10,000. The FAA also assumed that the average safety door system adds 100 pounds to a large airplane. This additional weight would have minimal impacts on weight and distance limitations. Based on a study by the Washington Consulting Group, *Impact of Weight Changes on Aircraft Fuel Consumption,* March 1994, p.16, each pound of weight increases fuel consumption by 12.25 gallons per year. The resulting total fuel increase is 1,225 gallons per year, which, at a price of $1 per gallon results in a $1,225 fuel consumption increase. The result is a total estimated increased maintenance and fuel cost of $11,225.

Economic Analysis

• *Comment:* One commenter suggests that the FAA adjust the benefits and costs section to specifically address the cost of the B–747–100/200/300 and reconsider whether the rule is still cost-beneficial for all kinds of operations, including all-cargo operations.

Response: The FAA disagrees. The potential catastrophic losses from a terrorist using a cargo airplane are similar to the potential losses from a terrorist using a passenger airplane. Consequently, the FAA determines that

the potential benefits would outweigh even recalculated costs.

Transportation Security Administration Activity

The Aviation and Transportation Security Act enacted by Congress on November 19, 2001, transferred airplane security to the TSA, but the physical airplane structure and the operational rules of airplanes remain the responsibility of the FAA. The TSA worked very closely with the FAA in developing and coordinating the flightdeck security rules, as well as providing an alternative means for cargo operators who are required to have a reinforced cargo door.

Additionally, as an interim step, the TSA issued security directives to require random inspection of air cargo and to require foreign all-cargo air carriers to comply with the same cargo security procedures that domestic air carriers must follow. Passenger aircraft that carry cargo and all-cargo planes, both foreign and domestic, will be subject to the random inspections on flights within, into, and out of the U.S. For longer term action, the TSA is implementing a broad Air Cargo Strategic Plan that employs a layered approach to security critical elements of the entire air cargo supply chain. The plan incorporates a threat-based risk management approach to ensure that all cargo deemed high-risk is inspected. It focuses on strategies to secure air cargo perimeters, facilities, equipment, and personnel. Enhanced background checks on persons who have access to cargo or cargo aircraft and required screening of persons transported aboard cargo planes are among many measures that will be adopted.

Conclusion

After consideration of the comments submitted in response to the final rules and in view of actions being implemented by the TSA for safe air cargo operations, the FAA has determined that no further rulemaking action is necessary.

Issued in Washington, DC, on April 19, 2005.

Marion C. Blakey,

Administrator.

[FR Doc. 05–8259 Filed 4–25–05; 8:45 am]

BILLING CODE 4910–13–P

Federal Register

Tuesday,
April 26, 2005

Part IV

Department of Housing and Urban Development

24 CFR Parts 30 and 203
Treble Damages for Failure To Engage in Loss Mitigation; Final Rule

DEPARTMENT OF HOUSING AND URBAN DEVELOPMENT

24 CFR Parts 30 and 203

[Docket No. FR–4553–F–03]

RIN 2501–AC66

Treble Damages for Failure To Engage in Loss Mitigation

AGENCY: Office of Assistant Secretary for Housing—Federal Housing Commissioner, HUD.

ACTION: Final rule.

SUMMARY: This final rule amends HUD's civil money penalty regulations to reflect HUD's authorization to impose treble damages on a mortgagee for any mortgage for which the mortgagee had a duty but failed to engage in appropriate loss mitigation actions. The final rule follows publication of a proposed rule, takes into consideration the public comments received on the proposed rule, but makes no changes at this final rule stage.

DATES: *Effective Date:* May 26, 2005.

FOR FURTHER INFORMATION CONTACT: Michael Reyes, Office of the Deputy Assistant Secretary for Single Family Housing, Office of Housing, Department of Housing and Urban Development, 301 NW. Sixth Street, Oklahoma City, OK 73102–2807, telephone (405) 609–8475 (this is not a toll-free number). Persons with hearing or speech impairments may access this number via TTY by calling the toll-free Federal Information Relay Service at 1–800–877–8339.

SUPPLEMENTARY INFORMATION:

I. Background

On April 14, 2004 (69 FR 19906), HUD published a proposed rule that would amend HUD's civil money penalty regulations at 24 CFR part 30 and HUD's single family mortgage insurance regulations at 24 CFR part 203 to reflect HUD's authorization to impose treble damages on a mortgagee for any mortgage for which the mortgagee had a duty but failed to engage in appropriate loss mitigation actions.

Sections 601(f), (g), and (h) of the Departments of Veterans Affairs and Housing and Urban Development, and Independent Agencies Appropriations Act, 1999 (Pub. L. 105–276, approved October 21, 1998), amended sections 230, 536(a), and 536(b)(1) of the National Housing Act (NHA) (12 U.S.C. 1715u, 12 U.S.C. 1735f–14(a)(2), and 12 U.S.C. 1735f–14(b)(1), respectively) to add a triple penalty to the existing civil money penalty system for failure to engage in appropriate loss mitigation. Section 230(a) of title II of the NHA, as amended, makes it mandatory for the mortgagee, upon the default of a single family mortgage, to engage in loss mitigation actions (including, but not limited to, special forbearance, loan modification, and deeds in lieu of foreclosure) for the purpose of providing alternatives to foreclosure. Section 601(h) amended section 536(b) of title V of the NHA to authorize but not require HUD to impose a civil money penalty on mortgagees that fail to engage in loss mitigation activities as required in section 230(a) of the NHA. Section 601(g) amended section 536(a) of title V of the NHA to provide that the penalty shall be equal to three times the amount of any insurance benefits claimed by a mortgagee with respect to any mortgage for which the mortgagee had a duty to engage in loss mitigation and failed to do so.

On December 6, 2000 (65 FR 76520), HUD published in the **Federal Register** an advance notice of proposed rulemaking (ANPR) that advised the public of HUD's plan to issue a proposed rule to amend HUD's civil money penalties regulations to assess treble damages for a mortgagee that had a duty to engage in loss mitigation and failed to do so. HUD's ANPR also solicited comments on the use of a tier ranking system (TRS) that analyzes a mortgagee's loss mitigation efforts on a portfolio-wide basis, and ranks the mortgagee on performance ratios of loss mitigation actions to conveyance claims. The TRS is based on a system that HUD implemented through notice as a pilot.

HUD's TRS consists of four tiers (Tiers 1, 2, 3, and 4) and is designed to measure a mortgagee's loss mitigation performance. While any mortgagee that has a duty to engage in loss mitigation and fails to do so is subject to treble damages, this rule provides appropriate notification that HUD will focus on Tier 4 mortgagees. Information available to HUD indicates that Tier 4 mortgagees engage in little or no loss mitigation. The public will be apprised of any change to HUD's focus through **Federal Register** notice. In addition, for any mortgagee, regardless of ranking or absence of ranking, HUD is not prevented from pursuing HUD penalties or sanctions.

Failure to engage in loss mitigation is defined as a mortgagee's failure to evaluate a loan for loss mitigation before four full monthly mortgage installments are due and unpaid to determine which, if any, loss mitigation techniques are appropriate (*see* 24 CFR 203.605), or subsequent failure to take appropriate loss mitigation action(s). Offering plausible loss mitigation options (as defined in 24 CFR 203.501) to qualified borrowers is engaging in loss mitigation. Mortgagees must be able to provide documentation of their loss mitigation evaluations and actions. Should a claim for mortgage insurance benefits later be filed, this documentation must be maintained in the claim review file in accordance with 24 CFR 203.365(c). Failure to successfully engage in loss mitigation with a borrower that is uncooperative or otherwise ineligible is not considered ''failure to engage'' in loss mitigation for that mortgage.

II. This Final Rule

This final rule follows publication of the April 14, 2004, proposed rule and takes into consideration the public comments received on the proposed rule. After careful consideration of the public comments, HUD has decided to adopt the April 14, 2004, proposed rule without change.

III. Discussion of Public Comments

The public comment period on the April 14, 2004, proposed rule closed on June 14, 2004. HUD received nine public comments on the proposed rule. Comments were received from a housing counseling agency, state housing and finance authorities, trade associations representing mortgage bankers and brokers, and a community development organization. This section of the preamble presents a summary of the significant issues raised by the public commenters and HUD's responses to these issues.

Comment: The treble damages penalty is unfair and excessively high. Two commenters stated that the treble damages penalty is unfair because it is not based on damages actually sustained by HUD. The commenters wrote that the penalties proposed are not treble damages but are actually numbers that are ten times HUD's actual losses on foreclosures. The commenters stated that the average losses incurred by HUD per foreclosure in 2003 were approximately $26,000, whereas an average penalty incurred per treble damages violation would be three times the average insurance claim, or approximately $276,000. One commenter explained the imposition of treble damages penalty is excessive in that the servicer ''risks losing'' three times the amount of the entire claim. Another commenter stated that treble damages should be limited to the amount of the borrower's current principal balance.

HUD Response. The statutory language that added this triple penalty to the existing civil money penalty

system states that the penalty shall be in the amount of three times the amount of any insurance benefits claimed for which the mortgagee failed to engage in loss mitigation. HUD, in determining the treble damages penalty amount, must abide by the statutory directive. Furthermore, the penalty is a punitive damage that would be assessed based on the lender's failure to follow HUD's policies and regulations. It is designed to remind mortgagees of the importance of complying with existing regulations and policies that require lenders to engage in loss mitigation, which minimizes the risk that borrowers unnecessarily lose their homes.

Comment: The TRS has no bright-line test. One commenter is concerned there is no ''bright-line test'' to determine a lender or mortgagee's placement in the TRS.

HUD Response. Lenders have had sufficient notice through 17 rounds of the Tier Ranking System to have a familiarity with the system. HUD published, by notice, with opportunity for comment, the benchmarks used in the Tier Ranking System.

Comment: Loss mitigation efforts are highly subjective. One commenter asked, ''How far is a lender expected to go to reach an uncooperative borrower [?]''

HUD Response. This final rule does not impose new servicing requirements on lenders, so the level of effort required to make contact and to attempt to gather and evaluate the borrower's financial situation remains unchanged. As stated in the proposed rule, if, despite documented attempts to evaluate or provide loss mitigation, implementation could not occur due to the borrower's refusal or failure to cooperate with the mortgagee, then generally, the mortgagee would be considered in compliance and not subject to treble damages for the particular loan.

An evaluation of the number of foreclosures by the 22 lenders earning a Tier 4 score in Round 17 shows that the median number of foreclosures was 32, the average was 63, the minimum was 11, and the maximum was 456. A comparison of these numbers to the corresponding level of loss mitigation used to calculate the TRS score supports HUD's contention that a Tier 4 ranking is evidence that a mortgagee has failed to engage in loss mitigation to such an extent that it is highly probable that the mortgagee has systematically denied loss mitigation to cooperative and qualified borrowers.

Lenders have had sufficient notice through 17 rounds of the Tier Ranking System. HUD's post-claim reviews can go back three years to establish a pattern of non-compliance with HUD policy. Treble damages will not be assessed on any claim where the date of default occurred before the final rule's effective date.

Comment: It is unclear what claims are subject to the treble damages audit and penalty. One commenter stated that HUD should provide a clearer statement of what claims, past and future, will be part of any treble damages audit and resulting penalty.

HUD Response. HUD will not pursue treble damages for failure to engage in loss mitigation where the date of default occurred before the final rule's effective date. Aside from that restriction, HUD may pursue treble damages as allowed by the operative statute of limitations.

Comment: Tier 4 mortgagees should have a different standard of treble damages penalty than Tiers 1–3 mortgagees. One commenter wrote that HUD must be very cautious in assessing the penalty and should only assess the penalty for Tier 4 mortgagees. Another commenter stated, ''HUD's apparent willingness to penalize any mortgagee for failure to engage properly in loss mitigation, 'regardless of [TRS] ranking or absence of ranking,' or historical context of excellent loss mitigation efforts, is disingenuous.'' One commenter wrote that it believes Tier 1–3 servicers should not have unlimited contingent liability for failure to engage in loss mitigation because minor infractions or other consumer complaints could trigger increased sampling and possible imposition of treble damages looking back to the previous servicing audit; thus, HUD should limit treble damages to only those servicers who fall into the Tier 4 category.

HUD Response. In the proposed rule, HUD stated that while any mortgagee that has a duty to engage in loss mitigation and fails to do so is subject to treble damages, this rule provides appropriate notification that HUD will focus on Tier 4 mortgagees for review purposes. Information available to HUD indicates that Tier 4 mortgagees engage in little or no loss mitigation. HUD continues to agree with this assessment.

Comment: A ''safe harbor'' should be established where mortgagees demonstrating overall compliance will not be subjected to treble damage penalties. One commenter wrote that a safe harbor should be provided to those who demonstrate a ''systematic overall compliance'' with the loss mitigation rules. The commenter explained that due to the ''extreme nature of the penalty,'' treble damages should not be imposed where a servicer is materially complying with the loss mitigation regulations and only ''isolated incidents'' of non-compliance have occurred. Another commenter stated that servicers that have generally good loss mitigation records may be subjected to treble damages for ''relatively isolated compliance failures.'' This commenter stated that a safe harbor should be included for those mortgagees with ''good rankings'' and that treble damages should be reserved for only those who have ''repeatedly failed to comply'' with loss mitigation requirements; otherwise, the ''inability to avoid treble damages'' may make ''GNMA servicing less attractive.'' Another commenter wrote that HUD should reconsider a treble damages penalty exemption for servicers who have demonstrated overall compliance with HUD's loss mitigation rules through the Tier rankings.

HUD Response. As stated previously, the civil money penalty statute does not allow HUD to exempt any group of lenders; therefore, HUD is prohibited from exempting Tier 1–3 lenders from potential treble damages. Also, as stated previously, this rule provides appropriate notification that HUD will focus on Tier 4 mortgagees for review purposes. Finally, while there is a case-by-case liability stemming from failure to evaluate a loan for loss mitigation and/or failure to then take the appropriate action, treble damage penalties are more likely where there is a pattern of non-compliance as opposed to an isolated servicing mistake. Thus, HUD continues to emphasize that HUD will primarily concentrate on those mortgagees that engage in little or no loss mitigation.

Comment: Mortgagees should be allowed flexibility to challenge its findings of non-compliance. One commenter wrote that the appeals process must be more broad in allowing servicers to refute substantive findings of ''failure to engage in loss mitigation'' regardless of the Tier ranking. The commenter explained that overly aggressive auditors who have misapplied Federal Housing Administration (FHA) requirements in the past will have the final decision on which companies will appear before the Mortgagee Review Board (MRB) for possible treble penalties; thus, servicers deserve an opportunity to refute an auditor's findings with HUD staff that are knowledgeable about loss mitigation policies before reaching the MRB. Another commenter stated that an appeals process is critical to ensure that the imposition of the treble damages penalty is justified.

HUD Response. HUD believes the commenters' concerns are misplaced,

and characterization of some Quality Assurance Division (QAD) monitors as ''overly aggressive'' is incorrect. HUD takes its duties to protect the public very seriously, and will continue current vigorous efforts to ensure the stability and viability of Departmental programs. Mortgagees have opportunities throughout the monitoring and Mortgagee Review Board process to contest proposed findings, and ultimately, to appeal any findings actually made. Generally, mortgagees have the ability to discuss potential findings with monitors on-site at the end of a review. If a mortgagee is referred to the Mortgagee Review Board and a Notice of Violation is issued, the mortgagee has an opportunity to submit a comprehensive response to the Notice. The mortgagee's response is considered by the Mortgagee Review Board in determining whether an administrative action or civil money penalty is appropriate. Upon being notified of the Board's determination to impose a sanction, a mortgagee has appeal rights as provided by statute and regulations.

Comment: Servicers should have sufficient lead times before tier scoring standards are changed and implemented. One commenter wrote that because HUD reserves the right to change the tier scoring benchmarks via **Federal Register** notice, any changes to the tier scoring system should allow the servicer necessary time (12 months) to make necessary revisions to their processes to meet new performance standards set out by HUD. Another commenter wrote that HUD should provide an advance warning system to allow servicers to improve their scores before enforcement actions can be taken. The commenter stated that servicers, like borrowers seeking loss mitigation, should be given a chance to cure. Moreover, although HUD has claimed it will adjust thresholds based on negative market conditions, an early warning system is still needed. Another commenter suggested that servicers be provided 12 months' advance warning of an increase in TRS thresholds or a change in TRS calculation so that servicers can publicly comment; also, 12 months allows for an evaluation of the change on a morgagee's tier ranking and an opportunity to adjust business models to raise scores. This alone may require hiring additional staff, a change of business plans, etc. This same commenter wrote that 12 months is consistent with other HUD timelines when other mortgagee policies have been changed. The commenter used the Round 14 Tier 4 threshold change from ''less than 15%'' to ''less than 40%'' as an example of how a more advanced warning could result in affected companies taking steps to avoid the new category.

HUD Response. A lender's business model should not be based on HUD's Tier Ranking System or its benchmarks; rather, it should be based on meeting the requirements that lenders evaluate all defaulted loans for loss mitigation and then take the appropriate action. As stated in the proposed rule, HUD may from time to time propose changes to the benchmarks. The changes will be proposed by a **Federal Register** notice, and offer the opportunity for comment before the changes take effect. Although the benchmarks are not part of the codified regulations, HUD nevertheless recognizes that changes to the benchmarks should undergo the opportunity for comment before becoming final and taking effect. Changes to evaluation thresholds are done periodically within the industry as performance changes. Under the TRS, Tier 4 will always be the lowest ranking possible. While the benchmarks were adjusted in Round 14, this was the only benchmark change since the workout ratio was adopted in Round 6. Advance notice, with opportunity to comment, will be given should HUD decide to change the TRS formula.

Comment: Only claims from the last quarter should be considered in HUD's TRS analysis. One commenter wrote that if HUD is willing to impose treble damages for failure to engage in loss mitigation on one loan, regardless of a mortgagee's loss mitigation performance, then HUD is being ''capricious and excessive.'' Both commenters stated that only claims filed during the last quarter comprising the ranking should be subject to treble damages and that claims in following quarters should not be subject to treble damages if the score improves to a higher ranking. The two commenters wrote that a preferred policy would be to subject servicers to the treble damage penalty only after servicers have been ranked Tier 4 for four consecutive quarters because this provides a reasonable opportunity to correct deficiencies or adjust business plans. In other words, this would allow sufficient time for an opportunity to cure. One of the commenters wrote that it previously supported quarterly rankings, but if the scope of servicers' liability is not limited to one quarter, then it is critical to reduce the frequency with which companies are evaluated for treble damages.

HUD Response. As stated above, lenders have had sufficient notice through 17 rounds of the Tier Ranking System to evaluate and improve their rankings. The statute does not permit HUD to exempt lenders from possible penalty based upon the approach proposed by the commenter, but treble damages will not be assessed on any loan where the date of default occurred before the effective date of this final rule.

As stated previously, this rule provides appropriate notification that HUD will focus on Tier 4 mortgagees for review purposes. HUD believes that looking at four quarters of data in TRS is in the lender's best interest, as it provides a better indication of performance. HUD will continue to provide quarterly feedback via the TRS. Given HUD's limited resources, HUD will focus on as many Tier 4 lenders as HUD can; however, the TRS is only one of several tools used by HUD for targeting lenders for review.

Comment: Tiers 1–3 liability should only extend for one quarter. Two commenters wrote that the window for Tiers 1–3 liability should extend for only one quarter. One commenter suggested providing quarterly reports for the servicers' benefit (''early warning system'') but that only one ''compliance'' ranking issued per year would trigger any enforcement action. The other commenter wrote that servicers ranked Tier 4 should only be subject to treble damages for those claims made during the last quarter comprising the ranking.

HUD Response. There is no ''tier liability.'' A mortgagee is not determined liable or not liable simply due to what Tier ranking a mortgagee occupies. As stated previously, HUD is focusing on Tier 4 mortgagees for review purposes. Also, as stated above, all Lenders have had sufficient notice through 17 rounds of the Tier Ranking System. HUD's post claim reviews can go back three years to establish a pattern of non-compliance with HUD policy. Treble damages will not be assessed on any loan where the date of default occurred before the final rule's effective date.

Comment: Only certain loan origination issue dates and Round dates should be used in determining TRS rankings. One commenter stated that it assumes HUD will not use dates from Round 14 through Round 17 in future scores if the data causes a servicer to be ranked Tier 4. The commenter explained that it assumes also that any findings of failure to engage in loss mitigation from October 1, 2002 through June 30, 2004 will not be subject to treble damages, because servicers did not have an advance warning of the increase in the threshold. Also, a

commenter stated that any application of the treble damages penalty should only apply to loans originated on or after the issue date of the final treble damages rule.

HUD Response. HUD believes there is no reason to delay application of TRS beyond issuance of the final rule. All tier rankings are based on one year's data, so mortgagees have sufficient information and notice of their performance to gauge their compliance. As a part of the pilot testing of TRS, 17 Rounds of TRS scores have been issued since December 2000. HUD's observation is that changes from Round to Round have been minimal based on the data's rolling 12 months. Treble damages will not be assessed on any loan where the date of default occurred before this final rule's effective date.

Comment: Implementation of the treble damages hurts FHA. One commenter stated ''We are concerned that the inability to completely avoid treble damages may make FHA servicing less attractive.''

HUD Response. HUD partially agrees with this comment. The inability to completely avoid treble damages may make FHA servicing less attractive to those lenders who systematically fail to engage in loss mitigation, which is a violation of existing regulations. However, this final rule adds no new servicing requirements; rather, it increases the penalty to those lenders who do not follow these requirements. When lenders do not service FHA loans in accordance with FHA regulations, this failure to perform loss mitigation results in greater losses to HUD. Lenders who do not service FHA loans in accordance with FHA regulations also harm the insurance fund by precluding ways by which a homeowner could recover financially and make mortgage payments. Additionally, lenders who do not service FHA loans in accordance with FHA regulations also deprive servicers of servicing income. The MRB has assessed and will continue to assess substantial fines to those lenders who demonstrate a pattern of non-compliance with HUD regulations.

Comment: Ranking servicers by legal identity is a positive step. One commenter expressed support that the proposed rule provides that servicers will be ranked by legal entity rather than separate mortgagee identification numbers. The commenter stated that servicers that have acquired other servicers will not be disadvantaged with regard to treble damages merely because they possess multiple mortgagee identification numbers and transact different activities under those numbers.

HUD Response. HUD has been providing a single, aggregate score only to those lenders with multiple HUD identification numbers who have legally become a single entity, and who have provided this notification to and met other requirements of HUD's Lender Approval and Recertification Division.

Comment: Question regarding proposed damages cap. One commenter asked whether the maximum money penalty, currently $1,250,000, applies to the treble damages penalty. The commenter would like HUD to make an express statement explaining the cap to treble damages.

HUD Response. HUD does not believe the annual limitation to the amount of civil money penalties applies to treble damages imposed for failure to engage in loss mitigation. The original enactment of a civil money penalty in 1988 was capped at the per violation level and the per violation cap was further modified by an annual cap. The 1998 legislation enacting a civil money penalty for failure to engage in loss mitigation provided for a penalty that substantially exceeds the original per violation maximum enacted by the initial 1988 civil money penalty legislation, and makes no mention of an annual cap on loss mitigation penalties. Indeed, a loss mitigation penalty for a single loss mitigation failure will likely be assessed at hundreds of thousands of dollars as the average claim to HUD is roughly $98,500. The legislative history for the 1998 enactment emphasizes Congress' intent that the loss mitigation program be ''aggressive and effective.'' Finally, as codified, the annual cap only modifies penalties previously capped on a per violation basis. Given the foregoing, HUD believes that an annual maximum civil money penalty amount does not apply to loss mitigation penalties.

Comment: HUD should make loan-level information more easily available to servicers. One commenter requested that HUD make available information used to calculate Tier Rankings in a downloadable batch format through FHA Connection. The commenter states that often the HUD data and the servicers' data do not match; also, a servicer must cut and paste tens of thousands of fields of information in order to perform reconciliation, which is very time-consuming. Servicers must be able to validate and reconcile their internal records to ensure all parties are operating off the same records.

HUD Response. In HUD's experience, the primary reason for failure to reconcile data stems from failure of the lender to accurately report to HUD's Single Family Default Monitoring System (SFDMS). The lender provides data to HUD, so the lender should be able to recreate in their own systems the data sent to HUD's SFDMS and data regarding paid loss mitigation and foreclosure claims. HUD has always responded to individual inquiries requesting loan level information. HUD is studying providing loan level data through a system accessible to lenders, but at this time does not have adequate funding for necessary system enhancements.

Comment: HUD should provide timely TRS reports when used to trigger liability or incentives. One commenter stated that because not all servicers can accurately monitor their Tier Rankings internally due to the difficulty in reconciliation and verification, HUD should provide timely TRS reports to ensure that the servicers have enough time to correct deficiencies before the next Tier Rankings are released.

HUD Response. There has always been at least a one-quarter lag from the end of the ranking period until the scores are released. This allows adequate time to ensure data integrity within the HUD systems from which the TRS counts are obtained. The TRS scoring methodology was designed so that lenders could calculate their own scores for self-monitoring, at any interval desired, using data from their own internal systems.

Comment: Round 6's calculation change negatively affects rankings. One commenter stated that the change in TRS calculation in Round 6, which requires servicers to back out multiple loss mitigation actions reported, makes the internal calculation of the score more difficult and less reliable. This results in discrepancies between servicer-generated rankings and the official Tier rankings.

HUD Response. The TRS calculation, including the maximum of one credit for multiple cases, was developed by HUD using widely available database software. The TRS scoring methodology was designed so that lenders could calculate their own scores for self-monitoring, at any interval desired, using data from their own internal systems.

Comment: Question regarding sampling to determine Tier 4 reviews. One commenter asked if HUD plans to conduct a 100 percent review of Tier 4 servicers or if HUD will limit the review to a smaller percentage or random sample.

HUD Response. Since 2001, soon after the first TRS scores were released, HUD incorporated TRS scores into the methodology used to target servicing lenders for review. This methodology

takes into account variables which include, but are not limited to, TRS scores, servicing portfolio size, length of time since last HUD review, default rates, default reporting, foreclosure claims, and previous findings. This methodology ensures that servicing lenders are reviewed with appropriate frequency, and effectively ensures that all Tier 4 servicing lenders will be reviewed at some time based on the variables in the targeting methodology. Furthermore, HUD may review any claim at any time for compliance with HUD's regulations regardless of tier ranking.

Comment: Small mortgagees will be negatively affected by a treble damages penalty. One commenter states it is concerned that HUD has retained the possibility to assess treble damages on any mortgagee HUD determines has failed to engage in loss mitigation. This commenter writes that such action would be very damaging to small mortgagees and that a good way to encourage mortgagees to engage in loss mitigation would be to use a tiered level of fines and penalties based on the size of the mortgagee. The commenter states that if a small mortgagee determines that it may be subject to an FHA penalty due to a failure to engage in required loss mitigation actions, it can simply push for foreclosure rather than offer loss mitigation to the mortgagor, purchase the property at foreclosure sale and make no claim (i.e., do not convey the property to the FHA).

HUD Response. The civil money penalty statute does not allow HUD to assess the penalty on any factor other than three times the amount of any insurance benefits claimed by the mortgagee with respect to any mortgage for which the mortgagee failed to engage in such loss mitigation actions. As stated in the proposed rule, all mortgagees have an obligation to ensure that all borrowers are afforded the opportunity for loss mitigation where loss mitigation is appropriate, and HUD has an obligation to enforce the loss mitigation requirements, regardless of the mortgagee's portfolio size.

HUD notes that pushing for a foreclosure without attempting loss mitigation as identified in the comment violates HUD's servicing regulations even in the absence of a filed claim. Implementation of a rush to foreclosure policy could subject the mortgagee and individuals involved in the violation to monetary penalties and program exclusions. A mortgagee that realizes that it has not done loss mitigation, and is fearful of a treble damages penalty, should, rather than push for foreclosure, stop or stay the foreclosure, perform the loss mitigation evaluation and then take the appropriate action, and potentially avoid a treble damages penalty altogether.

Comment: Small mortgagees are unable to handle the financial and organizational costs associated with additional regulations. A commenter wrote that small mortgagees such as state housing agencies are on the verge of suffering because of a variety of FHA policies and servicing FHA-insured loans is becoming almost as costly as servicing sub-prime loans. The potential fines and treble damages that the new mortgagee may encounter after taking on the service of new portfolios must be considered. The commenter stated that the ''myriad of rules, regulations, complexities, penalties and fines that are part of the current FHA insurance environment are detrimental to the achievement of the mission of state housing agencies and in turn detrimental to the achievement of HUD's stated mission and strategic goals.'' The commenter offered suggestions to lessen what the commenter states is a significant economic impact on small entities. The commenter suggests that: (1) A new definition of ''small'' be implemented; (2) more penalty categories be created where the penalties and fees are lower for smaller organizations; and (3) classifications are based on portfolio size and not the number of claims.

HUD Response. As stated previously, Section 230(a) of the NHA requires lenders to engage in loss mitigation actions. Again, this final rule adds no new servicing requirements; rather, it provides for imposition of a penalty on mortgagees that do not follow loss mitigation requirements. The intent of treble damages is to encourage mortgagees to comply with existing HUD policies, regulations, and statutes.

Comment: HUD should address the unique needs of specialty servicers, especially small-to mid-sized servicers and subservicers, which have unique business models. The commenter wrote that when subservicers are contractually required to finalize any foreclosure actions and process claims on behalf of the primary servicer, the subservicer must identify itself as the ''mortgagee of record'' and that foreclosure claim payment will be assigned to the subservicer for Tier Ranking purposes, thus negatively affecting the subservicer's TRS ranking. Also, buyers that acquire servicing for severely delinquent loans will have limited opportunity to perform loss mitigation. The commenter wrote that HUD should expressly state that a servicer's business model and/or the practical inability to perform certain loss mitigation functions will be considered a compensating factor for a Tier 4 ranking and HUD's imposition of treble damages. HUD should review servicers and the impact those servicers' different business models have on a case-by-case basis. Another commenter stated that ''mistakes happen.'' The commenter noted that one mistake on a loan file, thus resulting in a treble damages penalty, could put a small mortgagee out of business.

HUD Response. As stated previously, section 230(a) of the NHA requires mortgagees to engage in loss mitigation actions. Again, this final rule adds no new servicing requirements; rather, it provides for imposition of a penalty on mortgagees that do not follow loss mitigation requirements. The intent of treble damages is to encourage mortgagees to comply with existing HUD policies, regulations, and statutes. HUD is not a party to contractual agreements between servicers and subservicers. Servicers and subservicers are cautioned, however, to ensure that the parties to the contract have followed HUD regulations regarding approved servicers, mortgage record changes and servicing requirements, including loss mitigation evaluation and the management decision to foreclose.

HUD disagrees with the comment that a servicer's business model and/or the practical inability to perform certain loss mitigation functions should be considered a compensating factor for a Tier 4 ranking and HUD's imposition of treble damages. To allow such a compensating factor undermines the effectiveness of the regulatory scheme as neither the buyer nor the seller would accept responsibility for appropriate servicing, including the loss mitigation evaluation. HUD cannot allow ''sale of a mortgage'' to be an acceptable reason to not evaluate a loan for loss mitigation. While it may be true that servicing mortgagees who acquire servicing of severely delinquent loans could have limited opportunity to perform loss mitigation, the solution lies in the servicing mortgagees's due diligence prior to acquiring loans. Due diligence provides the servicing mortgagee the opportunity to measure the risks inherent in the portfolio, including, but not limited to, inadequate servicing or other factors that may ultimately lead to findings, civil money penalties, or indemnification of HUD (Please see Mortgagee Letter 2002–21, dated September 26, 2002, Due Diligence in Acquiring Loans, and HUD Handbook 4330.1, Rev-5, Chapter 6, for more guidance).

Finally, while there is a case-by-case liability stemming from failure to evaluate a loan for loss mitigation and/or failure to then take the appropriate action, treble damage penalties are more likely where there is a pattern of non-compliance as opposed to an isolated servicing mistake.

IV. Small Business Concerns Related to Treble Damages

With respect to imposing treble damages on a mortgagee for failure to engage in loss mitigation, or taking other appropriate enforcement action against a mortgagee, HUD is cognizant that section 222 of the Small Business Regulatory Enforcement Fairness Act of 1996 (Public Law 104–121) (SBREFA) requires the Small Business and Agriculture Regulatory Enforcement Ombudsman to ''work with each agency with regulatory authority over small businesses to ensure that small business concerns that receive or are subject to an audit, on-site inspection, compliance assistance effort, or other enforcement related communication or contact by agency personnel are provided with a means to comment on the enforcement activity conducted by this personnel.'' To implement this statutory provision, the Small Business Administration has requested that agencies include the following language on agency publications and notices that are provided to small business concerns at the time the enforcement action is undertaken. The language is as follows:

Your Comments Are Important

The Small Business and Agriculture Regulatory Enforcement Ombudsman and 10 Regional Fairness Boards were established to receive comments from small businesses about Federal agency enforcement actions. The Ombudsman will annually evaluate the enforcement activities and rate each agency's responsiveness to small business. If you wish to comment on the enforcement actions of [insert agency name], you will find the necessary comment forms at *http://www.sba.gov.ombudsman* or call 1–888–REG–FAIR (1–888–734–3247).

In accordance with its notice describing HUD's actions on the implementation of SBREFA, which was published on May 21, 1998 (63 FR 28214), HUD will work with the Small Business Administration to provide small entities with information on the Fairness Boards and National Ombudsman program, at the time enforcement actions are taken, to ensure that small entities have the full means to comment on the enforcement activity conducted by HUD.

V. Findings and Certifications

Public Reporting Burden

The information collection requirements contained in this rule have been approved by the Office of Management and Budget (OMB) in accordance with the Paperwork Reduction Act of 1995 (44 U.S.C. chapter 35) and assigned OMB control number 2502–0523. An agency may not conduct or sponsor, and a person is not required to respond to, a collection of information unless the collection of information displays a valid control number.

Regulatory Flexibility Act

The Regulatory Flexibility Act (5 U.S.C. 601 *et seq.*), generally requires an agency to conduct a regulatory flexibility analysis of any rule subject to notice and comment rulemaking requirements unless the agency certifies that the rule will not have a significant economic impact on a substantial number of small entities. All entities, small or large, will be subject to the same penalties for failure to engage in loss mitigation as established by statute and implemented by this rule. The statute does not provide an exemption for small entities. To the extent that the treble damages penalty would impose a significant economic impact on small entities, an impact will only occur due to a mortgagee's own inaction—since the only entities that will be affected will be poorly performing mortgagees that fail to engage in loss mitigation. Therefore, the undersigned certifies that this final rule will not have a significant economic impact on a substantial number of small entities.

Environmental Impact

In accordance with 24 CFR 50.19(c)(6) of HUD's regulations, this rule involves establishment of treble damages for lenders who fail to perform the loss mitigation evaluation and actions under 24 CFR 203.605. In accordance with 24 CFR 50.19(c)(1) of HUD's regulations, this final rule does not direct, provide for assistance or loan and mortgage insurance for, or otherwise govern or regulate, real property acquisition, disposition, leasing, rehabilitation, alteration, demolition, or new construction, or establish, revise, or provide for standards for construction or construction materials, manufactured housing, or occupancy. Therefore, this rule is categorically excluded from the requirements of the National Environmental Policy Act (42 U.S.C. 4321 *et seq.*).

Executive Order 13132, Federalism

Executive Order 13132 (entitled ''Federalism'') prohibits, to the extent practicable and permitted by law, an agency from promulgating a regulation that has federalism implications and either imposes substantial direct compliance costs on state and local governments and is not required by statute, or preempts state law, unless the relevant requirements of Section 6 of the Executive Order are met. This rule affects only mortgagees and does not have federalism implications and does not impose substantial direct compliance costs on state and local governments or preempt state law within the meaning of the Executive Order.

Unfunded Mandates Reform Act

Title II of the Unfunded Mandates Reform Act of 1995 (UMRA) (2 U.S.C. 1531–1538) establishes requirements for Federal agencies to assess the effects of their regulatory actions on state, local, and tribal governments and the private sector. This final rule does not impose any Federal mandates on any state, local, or tribal government or the private sector within the meaning of UMRA.

Regulatory Planning and Review

The Office of Management and Budget (OMB) reviewed this rule under Executive Order 12866, Regulatory Planning and Review. OMB determined that this rule is a ''significant regulatory action'' as defined in section 3(f) of the Order (although not an economically significant regulatory action under the Order). Any changes made to this rule as a result of that review are identified in the docket file, which is available for public inspection in the office of the Regulations Division, Office of General Counsel, Room 10276, 451 Seventh Street, SW., Washington, DC 20410–5000.

Catalog of Federal Domestic Assistance Number

The Catalog of Federal Domestic Assistance number applicable to the program affected by this rule is 14.117.

List of Subjects

24 CFR Part 30

Administrative practice and procedure, Grant programs—housing and community development, Loan programs—housing and community development, Mortgages, Penalties.

24 CFR Part 203

Hawaiian Natives, Home improvement, Indians—lands, Loan programs—housing and community

development, Mortgage insurance, Reporting and recordkeeping requirements, Solar energy.

■ For the reasons discussed in the preamble, HUD amends 24 CFR parts 30 and 203 to read as follows:

PART 30—CIVIL MONEY PENALTIES: CERTAIN PROHIBITED CONDUCT

■ 1. The authority citation for 24 CFR part 30 continues to read as follows:

Authority: 12 U.S.C. 1701q–1, 1703, 1723i, 1735f–14, 1735f–15; 15 U.S.C. 1717a; 28 U.S.C. 2641 note; 42 U.S.C. 3535(d).

Subpart B—Violations

■ 2. In § 30.35, add a new paragraph (a)(15) and revise paragraph (c) to read as follows:

§ 30.35 Mortgagees and lenders.

* * * * *

(a) * * *

(15) Fails to engage in loss mitigation as provided in § 203.605 of this title.

* * *

(c) *Amount of penalty. (1) Maximum penalty.* Except as provided in paragraph (c)(2) of this section, the maximum penalty is $6,500 for each violation, up to a limit of $1,250,000 for all violations committed during any one-year period. Each violation shall constitute a separate violation as to each mortgage or loan application.

(2) Maximum penalty for failing to engage in loss mitigation. The penalty for a violation of paragraph (a)(15) of this section shall be three times the amount of the total mortgage insurance benefits claimed by the mortgagee with respect to any mortgage for which the mortgagee failed to engage in such loss mitigation actions.

Subpart C—Procedures

■ 3. Add § 30.80 (l) to read as follows:

§ 30.80 Factors in determining the appropriateness and amount of civil money penalty.

* * * * *

(l) HUD may consider the factors listed in paragraphs (a) through (k) of this section to determine the appropriateness of imposing a penalty under § 30.35(c)(2); however, HUD cannot change the amount of the penalty under § 30.35(c)(2).

PART 203—SINGLE FAMILY MORTGAGE INSURANCE

■ 4. The authority citation for 24 CFR part 203 continues to read as follows:

Authority: 12 U.S.C. 1709, 1710, 1715b, and 1715u; 42 U.S.C. 3535(d).

Subpart C—Servicing Responsibilities

■ 5. Revise § 203.500 to read as follows:

§ 203.500 Mortgage servicing generally.

This subpart identifies servicing practices of lending institutions that HUD considers acceptable for mortgages insured by HUD. Failure to comply with this subpart shall not be a basis for denial of insurance benefits, but failure to comply will be cause for imposition of a civil money penalty, including a penalty under § 30.35(c)(2), or withdrawal of HUD's approval of a mortgagee. It is the intent of the Department that no mortgagee shall commence foreclosure or acquire title to a property until the requirements of this subpart have been followed.

■ 6. Revise § 203.605 to read as follows:

§ 203.605 Loss mitigation performance.

(a) Duty to mitigate. Before four full monthly installments due on the mortgage have become unpaid, the mortgagee shall evaluate on a monthly basis all of the loss mitigation techniques provided at § 203.501 to determine which is appropriate. Based upon such evaluations, the mortgagee shall take the appropriate loss mitigation action. Documentation must be maintained for the initial and all subsequent evaluations and resulting loss mitigation actions. Should a claim for mortgage insurance benefits later be filed, the mortgagee shall maintain this documentation in the claim review file under the requirements of § 203.365(c).

(b) Assessment of mortgagee's loss mitigation performance. (1) HUD will measure and advise mortgagees of their loss mitigation performance through the Tier Ranking System (TRS). Under the TRS, HUD will analyze each mortgagee's loss mitigation efforts portfolio-wide on a quarterly basis, based on 12 months of performance, by computing ratios involving loss mitigation attempts, defaults, and claims. Based on the ratios, HUD will group mortgagees in four tiers (Tiers 1, 2, 3, and 4), with Tier 1 representing the highest or best ranking mortgagees and Tier 4 representing the lowest or least satisfactory ranking mortgagees. The precise methodology for calculating the TRS ratios and for determining the tier stratification (or cutoff points) will be provided through **Federal Register** notice. Notice of future TRS methodology or stratification changes will be published in the **Federal Register** and will provide a 30-day public comment period.

(2) Before HUD issues each quarterly TRS notice, HUD will review the number of claims paid to the mortgagee. If HUD determines that the lender's low TRS score is the result of a small number of defaults or a small number of foreclosure claims, or both, as defined by notice, HUD may determine not to designate the mortgagee as Tier 3 or Tier 4, and the mortgagee will remain unranked.

(3) Within 30 calendar days after the date of the TRS notice, a mortgagee that scored in Tier 4 may appeal its ranking to the Deputy Assistant Secretary for Single Family or the Deputy Assistant Secretary's designee and request an informal HUD conference. The only basis for appeal by the Tier 4 mortgagee is disagreement with the data used by HUD to calculate the mortgagee's ranking. If HUD determines that the mortgagee's Tier 4 ranking was based on incorrect or incomplete data, the mortgagee's performance will be recalculated and the mortgagee will receive a corrected tier ranking score.

(c) Assessment of civil money penalty. A mortgagee that is found to have failed to engage in loss mitigation as required under paragraph (a) of this section shall be liable for a civil money penalty as provided in § 30.35(c) of this title.

Dated: April 15, 2005.

John C. Weicher,

Assistant Secretary for Housing—Federal Housing Commissioner.

[FR Doc. 05–8334 Filed 4–25–05; 8:45 am]

BILLING CODE 4210–27–P

Federal Register

Tuesday,
April 26, 2005

Part V

Department of Labor

Employment and Training Administration

Workforce Investment Act—Migrants and Seasonal Farmworker Programs Solicitation for Grant Applications—National Farmworker Jobs Program; Housing Assistance for Program Year 2005; Notices

DEPARTMENT OF LABOR

Employment and Training Administration

Workforce Investment Act—Migrants and Seasonal Farmworker Programs Solicitation for Grant Applications—National Farmworker Jobs Program for Program Year 2005

AGENCY: Employment and Training Administration.

ACTION: New. Initial announcement of a Program Year (PY) 2005 grant competition for operating the National Farmworker Jobs Program (NFJP) under section 167 of the Workforce Investment Act of 1998 (WIA), 29 U.S.C. 9201.

Funding Opportunity Number: SGA/DFA PY 04–06.
Catalog of Federal Domestic Assistance (CFDA) Number: 17.264.

SUMMARY: The U.S. Department of Labor (the Department or DOL), Employment and Training Administration (ETA), Office of National Programs (ONP), Division of Seasonal Farmworker Programs (DSFP), announces a grant competition for operating the National Farmworker Jobs Program (NFJP), under section 167 of the Workforce Investment Act of 1998 (WIA), 29 U.S.C. 9201. All applicants for grant funds should read this notice in its entirety.

Section 167, paragraph (a) of WIA requires that the Secretary award grants or contracts on a competitive basis to eligible entities for the purposes of carrying out the activities authorized under section 167. Under this solicitation, DSFP anticipates that approximately $71,690,318, allotted among State service areas, will be available for grant awards for the NFJP.

Key Dates: The closing date for receipt of applications under this announcement is May 27, 2005. Applications must be received at the address below no later than 5 p.m., eastern standard time.

ADDRESSES: Applications must be directed to the U.S. Department of Labor, Employment and Training Administration, Division of Federal Assistance, Attention: James Stockton, Room N–4438, 200 Constitution Avenue, NW., Washington, DC 20210.

SUPPLEMENTARY INFORMATION:

I. Funding Opportunity Description

The U.S. Department of Labor, Employment and Training Administration, Division of Seasonal Farmworker Programs (DSFP) is requesting grant applications for operating the National Farmworker Jobs Program (NFJP) in accordance with section 167 of the Workforce Investment Act of 1998 (WIA), 29 U.S.C. 9201. The NFJP is designed to serve economically disadvantaged persons who primarily depend on employment in agricultural labor performed within the United States, including Puerto Rico, who experience chronic unemployment or underemployment. Qualifying participants are typically those persons employed on a seasonal or part-time basis in the unskilled and semi-skilled manual labor occupations in crop and animal production. Through training and other workforce development services, the program is intended to assist eligible migrants and seasonal farmworkers and their families to prepare for jobs likely to provide stable, year-round employment both within and outside agriculture.

In response to growing global competition, the U.S. economy is engaged in a structural change that causes skill requirements to constantly shift and calls on businesses to be agile in adapting to change. Changing skill requirements and the demand for an enhanced level of business flexibility calls for a competitive workforce, one that can quickly acquire skills in demand. Creating a competitive workforce also means taking full advantage of diversity in the workforce so that no worker willing to acquire needed skills is left behind. For agricultural employers and farmworkers, the transformation of the U.S. economy will require that these customers have access to the full spectrum of services available from local One-Stop Career Centers, not just services funded through the WIA Section 167 program (NFJP).

For the past three Fiscal/Program Years (FY/PY 2003, 2004, and FY 2005), ETA has pursued a strategy intended to increase farmworkers' access to workforce investment services by supporting the One-Stop Career Center system's continued movement towards universality and integrated service delivery.

As part of ETA's continued commitment to this integration strategy, in PY 2005 the agency will continue the emphasis begun in the PY 2003 grants competition for the NFJP that requires applicants responding to this SGA to design their programs around priorities intended to support the system's forward movement towards full integration of services, as follows:

Expanding the Network of Employers Using the System of Integrated Services—The number of employers that turn to the public workforce investment system at any given time to meet their skill needs is an important element in a strategy designed to increase the employment and training opportunities available to farmworkers. Therefore, this solicitation requires applicants to establish a goal to increase, per year, the number of employers with whom they do business, and to explain the strategy that will be implemented to meet the increase from the baseline established.

Targeting Occupations in High Growth Industries—This solicitation requires applicants to provide an analysis of the industries in the State, particularly high growth industries; the occupations in those industries for which farmworkers could be trained; the opportunities that exist for farmworkers to gain access to those occupations in the areas where they live and work; as well as develop a plan for outreach to those employers to ensure access for farmworkers to employment opportunities. A description of the economic conditions in the State, and how these conditions influence the availability of jobs in high growth industries, should be included.

A Balanced Program of Activities—Among the list of activities that can be provided through the WIA Section 167 (NFJP) program are services often referred to as related assistance. These services are primarily supportive services intended to assist farmworkers to enter training or retain their employment. While related assistance services are an important component in the menu of services provided to farmworkers, the central focus of the NFJP remains those employment and training services that lead to higher skilled and higher paid employment for farmworkers, either inside or outside agriculture. Applicants will be expected to describe how their intended mix of program services reflects the central importance of employment and training services that leverage economic outcomes for farmworkers.

Making Operational an Integration of Services for Farmworkers in the One-Stop Career Center System—Achieving better integration of employment and training services funded under the NFJP with the WIA adult and dislocated worker formula-funded job training and related services is a major ETA policy goal for the workforce investment system. This policy goal was established in PY 2003 and reflected in that year's SGA competition. It has continued to be pursued through a variety of strategies. Better integration of services within the One-Stop system can significantly increase the number of farmworkers who receive high quality workforce investment services that lead to improved employment and earnings. Applicants will be expected to describe

the strategic planning and operational steps they will undertake to have a significant impact on services integration.

The NFJP is subject to the requirements found at WIA Section 167 and the Department's regulations at 20 CFR part 669. This program is also subject to the requirements of 29 CFR parts 93 (New Restrictions on Lobbying), 96 (Audit Requirements), and 98 (Debarment, Suspension, and Drug-Free Workplace Requirements), as well as the non-discrimination regulations implementing WIA Section 188 at 29 CFR part 37. Applicants should be familiar with these requirements and consult the WIA regulations at 20 CFR parts 660 through 671 in developing their grant proposals. Should the regulations at part 669 of WIA conflict with regulations elsewhere in 20 CFR, the regulations at part 669 will control.

In addition, this program is subject to the provisions of the ''Jobs for Veterans Act,'' Public Law 107–288, which provides priority of service to veterans and certain of their spouses in all Department of Labor-funded job training programs. Please note that, to obtain priority of service, a veteran must first meet the NFJP's eligibility requirements.

The NFJP is subject to the common performance measures for job training and employment programs established by the Office of Management and Budget (OMB). Guidance on the common performance measures can be found in ETA's Training and Employment Notice (TEN) No. 8–02 (March 27, 2003), available at *http://ows.doeta.gov/dmstree/ten/ten2k2/ten_08–02.htm.*

Applications submitted in response to this SGA are required to include estimates of expected performance against these common performance measures. The common performance measures are: Entered Employment, Employment Retention, and Earnings Increase. Applicants will be required to describe the reporting system they will establish to allow for data collection sufficient to report results against the common measures. The NFJP will begin data collection for these common measures in PY 2005 (July 1, 2005, through June 30, 2006).

II. Award Information

The type of assistance instrument to be used for the NFJP is the grant. Grants awarded through this solicitation will be for a two-year period, as prescribed in WIA Section 167. Please be advised that the Consolidated Appropriations Act, 2005 (Pub. L. 108–447) provided funding for the NFJP for PY 2005 only (July 1, 2005 through June 30, 2006). Therefore, second year funding will be dependent on the availability of funding through the FY 2006 appropriations process.

The amount available nationally for the NFJP State service area allotments is $71,690,318. State allotments are established through a formula process, and are published in a separate **Federal Register** notice. Please refer to our Web site (*http://www.doleta.gov/MSFW/pdf/allocationtable.pdf*) for a list of individual State allocations. The Consolidated Appropriations Act, 2005 House and Senate Reports provide that no State area shall receive less than 85 percent of its 1998 funding level; however, it also contained a mandatory rescission of .080 percent that applied to all programs. The total of $71,690,318 available for allocation for formula grants is a result of applying this rescission.

For purposes of this grant application, applications are solicited for a single NFJP operation per State, to serve the migrant and seasonal farmworkers of each State and Puerto Rico, with the following exceptions:

- Connecticut and Rhode Island are a combined State service area;
- Delaware and Maryland are a combined State service area;
- Applications for the combined State service areas mentioned above must address the two States as a single geographic area, but the proposed service delivery plan for the combined State area must show that consideration has been given to the entire population of migrant and seasonal farmworkers working or residing within the combined geographic area;
- Between 4 and 6 applications will be selected to operate the NFJP program in the agricultural counties in California; and
- No application will be accepted to provide services in Alaska due to the State's small relative share of seasonal agricultural employment.

Please be advised that in the event that no grant application is received for a State, or all applications received are considered not fundable by the Grant Officer after the panel review and scoring process, or a grant agreement is not successfully negotiated with a selected applicant, the Department will offer the Governor of that State a ''right of first refusal'' to submit an acceptable application, if that State has not applied (*i.e.*, if no State agency in that State applied for a grant in this competition). If the Governor does not accept this offer within 15 days after being notified, the Department will designate another organization to operate the NFJP in that State. In cases where the State agency was an applicant, and all applications are found not fundable or are not successfully negotiated, the Department will designate another organization to operate the NFJP in that State.

Note: Selection of an organization as a grantee does not constitute approval of the grant application as submitted. Before the actual grant is awarded, the Department may enter into negotiations about such items as program components, staffing and funding levels, and administrative systems in place to support grant implementation. If the negotiations do not result in a mutually acceptable submission, the Grant Officer reserves the right to terminate the negotiation and decline to fund the application.

III. Eligibility Information

Eligible Applicants—Applicants need not be a current or prior WIA Section 167 grantee to establish eligibility to be awarded a grant under this solicitation. States, Local Workforce Investment Boards (LWIBs), faith-based and community organizations, institutions of higher learning, and other entities capable of delivering services on a statewide basis are all examples of organizations eligible to apply for WIA Section 167 grants.

WIA Section 167(b) describes entities eligible to receive a grant as those that have:

—An understanding of the problems of eligible migrant and seasonal farmworkers, including their dependents;
—A familiarity with the geographical area to be served; and
—A demonstrated capacity to effectively administer a diversified program of workforce investment activities for eligible migrant and seasonal farmworkers.

Additionally, to be responsive to the requirements of this solicitation, applicants must demonstrate how the strategies contained in their applications will support the priorities described in Section I of this solicitation, *i.e.*, expanding the network of employers using the system of integrated services; targeting occupations in high growth industries; implementing a program of services that balances training and employment services with other program interventions; and making operational better integration of services for farmworkers.

Applicants must demonstrate how they will work with the State Workforce Investment Board (State Board) or Local Workforce Investment Boards (LWIB), or One-Stop operators in the service area(s) to assure an integrated service delivery approach to farmworkers through the

local One-Stop system. This may include strategic planning and operational steps taken by the applicant and the State Board or LWIBs likely to have a significant impact on services integration.

If the applicant is a State, an LWIB or a One-Stop Career Center operator applying on behalf of the LWIB, the application must instead demonstrate how efforts have been/will be undertaken to integrate services provided by all One-Stop partners to enhance the workforce services provided to farmworkers, the expected outcomes, and the ''next steps'' to be undertaken to continue to improve on any past integration efforts.

Cost Sharing or Matching—The WIA section 167 program does not require grantees to share costs or provide matching funds.

Other Eligibility Criteria—In accordance with 29 CFR part 98, entities that are debarred or suspended shall be excluded from Federal financial assistance and are ineligible to receive a WIA Section 167 grant.

Prior to awarding a grant, the Department will conduct a responsibility review of each potential grantee through available records. The responsibility review relies on examining available records to determine if an applicant has a satisfactory history of accounting for Federal funds and property. The responsibility review is independent of the competitive process. Applicants failing to meet the standards of the responsibility review may be disqualified for selection as grantees, irrespective of their standing in the competition. Any applicant that is not selected as a result of the responsibility review will be advised of their appeal rights. The responsibility tests that will be applied are those present in the WIA regulations (20 CFR 667.170).

Legal rules pertaining to inherently religious activities by organizations that receive Federal financial assistance—The government is generally prohibited from providing direct financial assistance for inherently religious activities. Please note that, in this context, the term direct financial assistance means financial assistance that is provided directly by a government entity or an intermediate organization, as opposed to financial assistance that an organization receives as the result of the genuine and independent private choice of a beneficiary. These grants may not be used for religious instruction, worship, prayer, proselytizing, or other inherently religious activities. Neutral, non-religious criteria that neither favor nor disfavor religion must be employed in the selection of grant recipients and sub-recipients.

IV. Application and Submission Information

Address To Request Application Package

This Solicitation for Grant Applications (SGA) includes all information and forms needed to apply for this funding opportunity. If additional copies of forms are needed, they can be found at *http://www.doleta.gov/msfw*, or at the **Federal Register** Web site, *http://www.gpoaccess.gov*.

Content and Form of Application Submission

An application must include two (2) separate and distinct parts: Part I—a cost proposal and Part II—a technical proposal. Applications that fail to adhere to the instructions in this section will be considered non-responsive and will not be considered. Part I of the proposal is the Cost Proposal and must include the following items:

- A cover letter, an original plus two (2) copies of the proposal, and an ink-signed original SF–424, ''Application for Federal Assistance'' (Appendix A) must be submitted. Beginning October 12, 2003, all applicants for Federal grant and funding opportunities are required to have a Dun and Bradstreet (DUNS) number (see OMB Notice of Final Policy Issuance, 68 FR 38402; June 27, 2003). Applicants must supply their DUNS number in item #5 of the new SF–424 issued by OMB (Rev. 9–2003). The DUNS number is a nine-digit identification number that uniquely identifies business entities. Obtaining a DUNS number is easy and there is no charge. To obtain a DUNS number, access this Web site: *http://www.dunandbradstreet.com*. You can also call 1–866–705–5711.
- The Standard Form (SF) 424–A (Appendix B). In preparing the budget form, the applicant must provide a concise narrative explanation to support the request. The budget narrative should break down the budget and should discuss precisely how administrative costs support the project goals.
- Part II of the application is the Technical Proposal, which demonstrates the applicant's capabilities to plan and implement the grant project in accordance with the provisions of this solicitation. The Technical Proposal should be limited to 40 numbered pages, double-spaced, single-sided, in 12-point text font and one-inch margins. Letters of support and any required attachments will not be subject to the page limitations; letters of support will not be included in the materials provided to the panel for review of the proposal. If any attachments are included, please label accordingly and specify the content of the attachment.
- No cost data or reference to prices should be included in the Technical Proposal. Instead, applicants should provide a two-page abstract summarizing the proposed project and applicant profile information, including the applicant's name, the project title, and the funding level requested. The two-page abstract is not included in the 40 page limit.

Applications that do not meet these requirements will not be considered.

Submission Dates and Times

The closing date for receipt of applications under this announcement is May 27, 2005. Applications must be received at the address below no later than 5 p.m. Eastern time. Applications sent by e-mail, telegram, or facsimile (fax) will not be accepted. Applications that do not meet the conditions set forth in this notice will not be honored. No exceptions to the mailing and delivery requirements set forth in this notice will be granted.

Mailed applications must be addressed to the U.S. Department of Labor, Employment and Training Administration, Division of Federal Assistance, Attention: James Stockton, Reference SGA/DFA PY 04–06, 200 Constitution Avenue, NW., Room N–4430, Washington, DC 20210. Applicants are advised that mail delivery in the Washington, DC area may be delayed due to mail decontamination procedures. Hand-delivered proposals will be received at the above address.

Applicants may apply online at *http://www.grants.gov*. For applicants submitting electronic applications via Grants.gov, it is strongly recommended that you immediately initiate and complete the ''Get Started'' steps to register with Grants.gov at *http://www.grants.gov/GetStarted*. Registration will probably take multiple days to complete which should be factored into plans for electronic application submission in order to avoid facing unexpected delays that could result in the rejection of your application. It is recommended that applicants experiencing problems with electronic submission submit their application by overnight mail until the electronic issues are resolved.

Late Applications

Any application received after the exact date and time specified for receipt at the office designated in this notice will not be considered, unless it is received before awards are made and it (a) was sent by the U.S. Postal Service registered or certified mail not later than the fifth calendar day before the date specified for receipt of applications (*e.g.*, an application required to be received by the 20th of the month must be postmarked by the 15th of that month); or (b) was sent by the U.S. Postal service Express Mail or Online to addressee not later than 5 p.m. at the place of mailing or electronic submission one (1) day prior to the date specified for receipt of applications. It is highly recommended that online submissions be completed one working day prior to the date specified for receipt of applications to ensure that the applicant still has the option to submit by U.S. Postal Service Express Mail in the event of any electronic submission problems. ''Post marked'' means a printed, stamped, or otherwise placed impression (exclusive of a postage meter machine impression) that is readily identifiable, without further action, as having been supplied or affixed on the date of mailing by an employee of the U.S. Postal Service. Therefore, applicants should request the postal clerk to place a legible hand cancellation ''bull's eye'' postmark on both the receipt and the package. Failure to adhere to the above instructions will be basis for a determination of nonresponsiveness.

Intergovernmental Review

Executive Order No. 12372, ''Intergovernmental Review of Federal Programs,'' and the implementing regulations at 29 CFR part 17 are applicable to this program. Under these requirements, an applicant must provide a copy of the funding proposal for comment to the States that have established a consultation process under the Executive Order. Applications must be submitted to the State's Single Point of Contact (SPOC), no later than the deadline for submission of the application to the Department. For States that have not established a consultative process under E.O. 12372, but have a State Workforce Investment Board (State Board), the State Board will be the SPOC. For WIA implementation purposes, this consultative process fulfills the requirement of WIA Section 167(e) concerning consultation with Governors and Local Workforce Investment Boards (LWIB). To strengthen the implementation of E.O. 12372, the Department establishes the following timeframe for the treatment of comments from the State's SPOC on WIA Section 167 applications: (1) The SPOC must submit comments, if any, to the Department and to the applicant, no later than 30 days after the deadline date for the submission of applications; (2) the applicant's response to the SPOC comments, if any, must be submitted to the Department no later than 15 days after the postmarked date of the comments from the SPOC; (3) the Department will notify the SPOC (with copy to the applicant) of its decision regarding the SPOC comments and applicant response; and (4) the Department will implement that decision within 10 days after it has notified the SPOC.

The names and addresses of the SPOCs are listed in the Office of Management and Budget's (OMB) home page at *http://www.whitehouse.gov/omb/grants/spoc.html*.

Funding and Other Restrictions

Grantees are limited to applying no more than 15 percent of the grant for administrative costs (see definition of administrative costs at 20 CFR part 667.220). Administrative costs higher than 15 percent of the grant will not be approved.

Other Submission Requirements

All other material required to be submitted is identified in the various sections of this solicitation.

V. Application Review Information Criteria

The following review criteria, totaling a maximum of 100 points, apply to all applications:

Understanding the Problems of the Eligible Migrants and Seasonal Farmworkers in the State Service Area—20 Points

Applicants must describe the economy (agricultural and non-agricultural) in the geographic area they propose to serve, the employment outlook for the area, including the number of employers with whom they currently work, new employers with whom they expect to work and the strategies to be used to attract new employers, a plan for the continued expansion of the employer network expected to be the major source of job opportunities for migrants and seasonal farmworkers to enter into employment, and how economic conditions and employer hiring needs affect the employment prospects of eligible migrant and seasonal farmworkers.

This section must also include a detailed description of the labor market, both agricultural and non-agricultural, the economic conditions expected during the course of the program year, and the hiring implications those economic conditions pose for the employers in the area. In addition, this section must include a discussion of projected high growth occupations in the service area that hold the potential for improved employment and earnings for farmworkers, and the strategies to be used in securing those opportunities for farmworkers.

Applicants must also describe the socio-economic characteristics and problems of eligible farmworkers, and their dependents, in the proposed service area, and describe what implications economic conditions, the labor market outlook, and the analysis of potential high growth occupations hold for the workforce strategies proposed through this solicitation, given the socio-economic characteristics of the eligible population to be served.

Scoring on this factor will be based on how well the applicant demonstrates its understanding of the local economy and how local economic conditions help to define the challenges to be met, and the problems to overcome, in improving farmworkers' employment and earnings. Scoring will also be based on how well the proposal demonstrates the nexus between economic conditions, the characteristics of the eligible farmworkers, and the workforce investment strategies proposed.

The review and evaluation of this factor will look closely for evidence of an effective network of employers that provide improved job placement opportunities, both within and outside agriculture, and the strategies to be used to continue to expand this employer network in the service area. The proposal should clearly describe the goal established to increase the number of employers with whom they do business, the baseline number to be used in measuring the increase, and how this expanded employer network will result in improved employment opportunities for farmworkers in higher-skilled, higher-paid occupations.

Familiarity With the Proposed Service Area—20 Points

To achieve the goal of integrating services for farmworkers through the One-Stop system, the applicant must have a clear understanding of the One-Stop system in the area and the network of social, educational, and health services available to help meet the diverse needs of the eligible farmworkers in the service area.

This section must include a description of the faith-based and community organizations in the service area and the applicant's experience in engaging these organizations in its service delivery strategy for migrant and seasonal farmworkers. It should also include a description of the services available through local service organizations, including faith-based and community organizations, and the applicant's strategy to mobilize those service organizations to provide comprehensive services to farmworkers while optimizing the use of limited NFJP resources, particularly supportive or related assistance services.

The applicant must describe its prior experience, if any, and demonstrated effectiveness in working with the One-Stop system to provide services to farmworkers. Include a description of the efforts to date to integrate services to farmworkers across all partners in the One-Stop system, and the steps to be taken to further make operational the integration of services.

These steps may include:

- Participation in local/State activities to develop the WIA formula funded five-year plan;
- Participation in activities that connect workforce investment and education with economic development planning;
- Participation in activities that help the State Board or LWIB to get more agricultural employers involved in the workforce investment system;
- Setting co-enrollment targets (between the NFJP and the WIA formula funded programs) that represent a substantial increase in services to farmworkers;
- Creating better pathways to both basic and post-secondary education, specifically with community colleges;
- Entering into and implementing agreements with the State Board or the LWIBs and One-Stop operators to significantly increase outreach to farmworkers, and to significantly increase the number of One-Stop staff who are cross-trained in NFJP/adult and dislocated workers services and requirements.

Applicants must describe their experience with developing or improving existing working relationships between partners in the One-Stop system, and how that experience will be translated into improved services integration for eligible farmworkers.

If the applicant is a State, an LWIB, or a One-Stop operator, this section should instead include a detailed description of the efforts to date to integrate services for farmworkers through the One-Stop system, the success of those efforts, and the operational steps to be undertaken to continue down the path of integration.

Scoring on this factor will be based on evidence presented of the applicant's knowledge of and working relationship with the network of workforce investment and related services in the service area, including the One-Stop system, and the services offered by social, educational, faith-based, community, and health organizations that are available to assist farmworkers.

Scoring will also be based on the applicant's effectiveness and success with causing these organizations to direct their resources to address the needs of farmworkers in a way that leads to maximizing the availability of limited NFJP resources while increasing the services provided to farmworkers through the One-Stop and/or through these service agencies.

If the applicant is a State, an LWIB or a One-Stop operator, scoring will be based instead on the success of efforts to integrate services to farmworkers through the One-Stop system and its partners, or the demonstrated potential for increased services to farmworkers. Any success to date in enrolling and serving farmworkers in WIA formula-funded programs should be outlined.

Administrative Capacity—20 Points

Applicants must demonstrate that they have adequate management information, performance management, case management, accounting, and program and fiscal reporting systems in place to ensure program and fiscal integrity. Because the NFJP has eligibility requirements for participation in the program, the applicant must also describe the eligibility determination and verification system in place that will allow for correct eligibility determinations and minimize enrollment of ineligible participants. Additionally, all ETA-funded job training programs, including the NFJP, will have to implement a data validation initiative intended to ensure that the data collected and reported to ETA is accurate. An applicant's participant and reporting system must be able to implement data validation procedures, as described in TEGL 3–03, 3–03 change 1, and 3–03 change 2 (OMB clearance issued August 31, 2004).

Applicants must describe their systems in support of program integrity, such as management information, performance management, and program participation (including individual participant records), needed for reporting and performance accountability and management, and to establish and maintain a client-centered case management system. Applicants are reminded that the NFJP is subject to the common measures for job training and employment (Entered Employment, Employment Retention, and Earnings Gain Increase, described earlier in this solicitation), and will have to implement the data collection and reporting requirements for these measures during PY 2005. Therefore, the data collection and reporting system, and its link to performance management and accountability, must be described in detail.

Fiscal integrity is a critical component of operating any federally-funded program. The applicant must describe a system that is sufficient to prepare financial reports and to trace funds to adequate levels of expenditures to ensure lawful spending. The system must have the capacity to track spending by program, to ensure that, for those organizations with funding from more than one Federal program, expenditures are posted against the appropriate program. Applicants must also describe their capacity to manage the supportive services, also described as related assistance services, and to account for expenditures related to these services.

The NFJP is required to use electronic reporting via the Internet. Applicants must describe their capacity to provide the equipment, access, and staff qualified to perform on-line reporting. The applicant must also demonstrate its capacity to provide case management as well as the electronic tools to be utilized (PC, software, Internet access, and e-mail accounts) to implement a client-centered, case management system.

Scoring on this factor will be based on evidence of effective systems for performance accountability and management, program and fiscal reporting, case management, eligibility determination and verification, as well as the ability to report electronically through the Internet.

Proposed Plan of Services—40 Points

The proposed service plan should describe in detail the major program activities proposed for the State service area in PY 2005. The proposal should include a description of how these program activities will support the priorities identified in section I of this solicitation: expanding the network of employers; targeting high growth occupations; a balanced program of activities; and taking the steps to make operational the integration of services to farmworkers through the One-Stop system.

The proposal should describe the vision, strategy, goals and objectives that guide the proposed plan of service and the results expected from implementing the proposed plan. It should include a description of how this service plan will strengthen migrant and seasonal farmworkers' ability to obtain or retain employment, to access employment opportunities in high growth occupations, and/or to upgrade their employment opportunities within agriculture, if they so choose. The plan should provide clear evidence that the service plan expands the workforce and related services available to farmworkers due to a closer integration between the NFJP service strategy and the local workforce investment service plan, and new or stronger partnerships with faith-based and community organizations.

Applicants should describe their strategy for providing related assistance services to farmworkers (see definition at 20 CFR 669.110). The numbers of participants receiving related assistance services should be limited to 40 percent or less of the total number of participants. If an organization expects that the number of participants they will serve through related assistance services will exceed 40 percent, the proposal should include a strong rationale explaining why that level of participation in related assistance is an essential element of the service strategy. It should be noted that the NFJP is primarily a job training program whose purpose is to assist eligible migrant and seasonal farmworkers and their families prepare for jobs that provide stable, year-round employment, both within and outside agriculture. Related assistance services are supportive services intended to assist eligible migrant and seasonal farmworkers to retain employment or enter into or remain in training.

If the applicant is a State, an LWIB or a One-Stop operator, the application must demonstrate how the service strategy achieves integration of services by all partners in the One-Stop system, and how this integration results in enhanced and improved workforce investment services to farmworkers.

The program plan of service section must include descriptions of:

—The State service area covered by the plan. If the proposal is for less than the entire agricultural area of the State (as could be the case in California, for example) the plan must identify the geographic area where services will be provided and an explanation supporting the geographic area selected.

—An estimate of the number of migrant and seasonal farmworker, broken out by category, to be provided training services. An estimate should also be included of the number of migrant and seasonal farmworkers, broken out by category, who will be provided related assistance services only.

—The strategies for conducting participant outreach and recruitment, including the involvement, if appropriate, of faith-based and community organizations in those strategies, as well as other One-Stop partner programs.

—The proposed client-centered case management system, including the staff's responsibilities for managing the system, the staff development opportunities available to enhance staff's skills in case management, and the capacity to enhance community resources available for case management through joint alliances and/or endeavors, such as through the One-Stop system.

—The core services to be delivered, and how those services will be delivered in collaboration with the One-Stop system. Include a description of the eligibility determination system and how the applicant determines service priorities.

—The intensive services proposed, the strategy for providing them, and the One-Stop system's involvement in the provision of these services (see definition of intensive services at WIA Section 134(d)(3) and 20 CFR 669.370). Please note that the NFJP regulations at 20 CFR 669.380 provide that the delivery of intensive and training services should flow from an objective assessment process that includes an Individual Employment Plan. The proposal must describe the strategy for doing this, as well as the organization's capacity to appropriately address an individual's needs as identified through the objective assessment. Intensive services are described in WIA 134(d)(3)(C) and 20 CFR 669.370.

—If work experience is to be offered as an activity, the process by which the determination to use it is based, and the strategy for measuring its success as a program activity. (*See* 20 CFR 669.370(b)(i) and (b)(ii)(B) for additional information on work experience activities.)

—The training services to be provided to eligible farmworkers, including the process used to determine a participant's enrollment in training services, and the process used when the determination is made not to place a participant in training. (*See* 20 CFR 669.410 for a description of training services.) In addition, the proposal should describe the strategy to be used to promote co-enrollment of participants in the WIA formula funded programs.

—The related assistance services, including supportive services, needed by migrant and seasonal farmworkers and their dependents, and the strategy for providing those services. The proposal should provide separate descriptions for those farmworkers receiving supportive services and also intensive and/or training services, and those farmworkers for whom related assistance services will be the only services provided. It should also include a description of the process used to determine the need for related assistance services, the differences in the determination process, if any, among migrant and seasonal farmworker groups, and the rationale for the differences.

—The proposal should describe the applicant's strategy for balancing related assistance services with the need to increase employment and training services.

—A description of the strategies to be used to achieve performance results with respect to job placement, employment retention, and earnings gains *i.e.*, the common measures to be implemented in PY 2005).

—The proposal should address how job placement opportunities will be pursued among the employers in the service area, including the strategies to secure job placement opportunities from new employers added to the network, as well as opportunities in high growth industries/occupations.

—The process by which the applicant will conduct follow-up services for those who are placed in jobs or engaged in entrepreneurial activities.

Scoring on this factor will be based on evidence that the applicant has used the information provided in the first three rating criteria, described above, to develop a service strategy and a plan of service that leads to measurable impact on improving the employment and earnings of farmworkers. It will also be based on evidence that the plan of service contains a balanced program of activities, and a rationale for the proposed services, as well as evidence that the service plan encompasses resources and program activities available from other One-Stop partners and/or the local services agencies, including faith-based and community organizations.

The evaluation of this factor will also assess whether the service strategy and service plan presented by the applicant

reflect a knowledge of the local workforce investment plan and propose services that complement that plan in a way that increases employment opportunities for farmworkers.

If the applicant is a State, an LWIB or a One-Stop operator, the evaluation of this factor will assess opportunities for integrating services through the One-Stop system and its partner programs to improve the workforce and related services received by farmworkers. Special emphasis will be placed on the success achieved in enrolling and serving farmworkers through WIA formula-funded programs.

Review and Selection Process

A review panel will rate each proposal according to the criteria scoring factors specified in this solicitation. Panel reviews are critical to the selection of grantees but are advisory in nature, and their recommendations are not binding on the Grant Officer. The Grant Officer, in selecting potential grantees, may consider any information that comes to his or her attention, including past performance of a previous grant and information from the program office, and will make the final selection determination based on what is most advantageous to the government. The Grant Officer may consider factors such as panel findings, geographic presence of the applicants, proposed areas to be served, and the best value to the government, cost, and other factors. The Grant Officer's determination for award under this SGA is final.

The Grant Officer may elect to make awards either with or without discussions and negotiations with the applicant. In situations without discussions, an award will be based on the applicant's signature on the SF–424, which constitutes a binding offer.

Applications rated by the panel with a score of less than 80 points will not be selected for award. In areas where there are no applications with a score of 80 or above, the process for selecting another potential grantee, described in section II, will be implemented.

IV. Award Administration Information

Award Notices

The Grant Officer will notify applicants, in writing, if they are selected as potential grantees. The notification will invite each potential grantee to negotiate the final terms and conditions of the grant as applicable, will establish a reasonable time and place for the negotiations, and will indicate the specific service delivery area and amount of funds to be allocated under the grant. FY 2005 funds will be awarded for the period July 1, 2005 to June 30, 2005. Funds awarded under WIA Section 167 are available for expenditure for two years.

An applicant that is not selected as a potential grantee or whose application has been denied in part or in whole by the Department will be notified in writing by the Grant Officer and advised of all appeal rights. The notification will outline the deficiencies as noted by the review panel and offer an opportunity for a debriefing. The written notification by the Grant Officer constitutes a final decision.

Administrative and National Policy Requirements

There are no additional administrative or national policy requirements.

Reporting

An applicant's proposal becomes the annual grant plan after a grant award is made, with additional information as appropriate and requested by the funding agency. WIA Section 167 grantees will be required to submit reports on financial expenditures, program participation, and participant outcomes on a quarterly basis. Grantees will also have to submit planned financial expenditures and planned program participation forms at the beginning of the program year. Grantees must report electronically, but may be asked to submit reports in paper form on occasion. As reflected earlier in this solicitation, this program is subject to the Common Measures for job training and employment programs, to be implemented beginning July 1, 2005. Grantees will be required to provide the data necessary to collect information for reporting performance results against the Common Measures. Information will be available in the future at *http://www.doleta.gov/performance.*

V. Agency Contacts

Questions related to this solicitation may be directed to Ms. Mamie Williams, Grants Management Specialist, phone (202) 693–3341; fax: (202) 693–2879 (this is not a toll free number). Please include a contact name, fax and telephone number.

This announcement is also being made available on the ETA Web site at *http://doleta.gov/sga/sga.cfm* and *http://www.grants.gov.*

Signed at Washington, DC, this 21st day of April, 2005.

James W. Stockton,

Grant Officer.

Attachments:

Appendix A: SF–424—Application for Federal Assistance.

Appendix B: SF–424 (A)—Budget Information Form.

Appendix C: OMB Survey N. 1890–0014: Survey on Ensuring Opportunity for Applications.

BILLING CODE 4510–30–P

APPLICATION FOR FEDERAL ASSISTANCE

Version 7/03

1. TYPE OF SUBMISSION: Application ☐ **Construction** ☐ **Non-Construction**	Pre-application ☐ **Construction** ☐ **Non-Construction**	**2. DATE SUBMITTED**	Applicant Identifier
		3. DATE RECEIVED BY STATE	State Application Identifier
		4. DATE RECEIVED BY FEDERAL AGENCY	Federal Identifier

5. APPLICANT INFORMATION

Legal Name:	**Organizational Unit:** Department:
Organizational DUNS:	Division:
Address: Street:	**Name and telephone number of person to be contacted on matters involving this application (give area code)** Prefix: First Name:
City:	Middle Name
County:	Last Name
State: Zip Code	Suffix:
Country:	Email:
6. EMPLOYER IDENTIFICATION NUMBER *(EIN):* ☐☐-☐☐☐☐☐☐☐	Phone Number (give area code) Fax Number (give area code)
8. TYPE OF APPLICATION: ☐ **New** ☐ **Continuation** ☐ **Revision** If Revision, enter appropriate letter(s) in box(es) (See back of form for description of letters.) ☐ ☐ Other (specify)	**7. TYPE OF APPLICANT:** (See back of form for Application Types) Other (specify)
	9. NAME OF FEDERAL AGENCY:
10. CATALOG OF FEDERAL DOMESTIC ASSISTANCE NUMBER: ☐☐-☐☐☐ TITLE (Name of Program):	**11. DESCRIPTIVE TITLE OF APPLICANT'S PROJECT:**
12. AREAS AFFECTED BY PROJECT *(Cities, Counties, States, etc.):*	
13. PROPOSED PROJECT Start Date: Ending Date:	**14. CONGRESSIONAL DISTRICTS OF:** a. Applicant b. Project

15. ESTIMATED FUNDING:		**16. IS APPLICATION SUBJECT TO REVIEW BY STATE EXECUTIVE ORDER 12372 PROCESS?**
a. Federal	$ .00	a. Yes. ☐ THIS PREAPPLICATION/APPLICATION WAS MADE AVAILABLE TO THE STATE EXECUTIVE ORDER 12372 PROCESS FOR REVIEW ON
b. Applicant	$ .00	DATE:
c. State	$ .00	
d. Local	$ .00	b. No. ☐ PROGRAM IS NOT COVERED BY E. O. 12372
e. Other	$ .00	☐ OR PROGRAM HAS NOT BEEN SELECTED BY STATE FOR REVIEW
f. Program Income	$ .00	**17. IS THE APPLICANT DELINQUENT ON ANY FEDERAL DEBT?**
g. TOTAL	$ .00	☐ Yes If "Yes" attach an explanation. ☐ No

18. TO THE BEST OF MY KNOWLEDGE AND BELIEF, ALL DATA IN THIS APPLICATION/PREAPPLICATION ARE TRUE AND CORRECT. THE DOCUMENT HAS BEEN DULY AUTHORIZED BY THE GOVERNING BODY OF THE APPLICANT AND THE APPLICANT WILL COMPLY WITH THE ATTACHED ASSURANCES IF THE ASSISTANCE IS AWARDED.

a. Authorized Representative		
Prefix	First Name	Middle Name
Last Name		Suffix
b. Title		c. Telephone Number (give area code)
d. Signature of Authorized Representative		e. Date Signed

Previous Edition Usable
Authorized for Local Reproduction

Standard Form 424 (Rev.9-2003)
Prescribed by OMB Circular A-102

INSTRUCTIONS FOR THE SF-424

Public reporting burden for this collection of information is estimated to average 45 minutes per response, including time for reviewing instructions, searching existing data sources, gathering and maintaining the data needed, and completing and reviewing the collection of information. Send comments regarding the burden estimate or any other aspect of this collection of information, including suggestions for reducing this burden, to the Office of Management and Budget, Paperwork Reduction Project (0348-0043), Washington, DC 20503.

PLEASE DO NOT RETURN YOUR COMPLETED FORM TO THE OFFICE OF MANAGEMENT AND BUDGET. SEND IT TO THE ADDRESS PROVIDED BY THE SPONSORING AGENCY.

This is a standard form used by applicants as a required face sheet for pre-applications and applications submitted for Federal assistance. It will be used by Federal agencies to obtain applicant certification that States which have established a review and comment procedure in response to Executive Order 12372 and have selected the program to be included in their process, have been given an opportunity to review the applicant's submission.

Item:	Entry:	Item:	Entry:
1.	Select Type of Submission.	11.	Enter a brief descriptive title of the project. If more than one program is involved, you should append an explanation on a separate sheet. If appropriate (e.g., construction or real property projects), attach a map showing project location. For preapplications, use a separate sheet to provide a summary description of this project.
2.	Date application submitted to Federal agency (or State if applicable) and applicant's control number (if applicable).	12.	List only the largest political entities affected (e.g., State, counties, cities).
3.	State use only (if applicable).	13	Enter the proposed start date and end date of the project.
4.	Enter Date Received by Federal Agency Federal identifier number: If this application is a continuation or revision to an existing award, enter the present Federal Identifier number. If for a new project, leave blank.	14.	List the applicant's Congressional District and any District(s) affected by the program or project
5.	Enter legal name of applicant, name of primary organizational unit (including division, if applicable), which will undertake the assistance activity, enter the organization's DUNS number (received from Dun and Bradstreet), enter the complete address of the applicant (including country), and name, telephone number, e-mail and fax of the person to contact on matters related to this application.	15	Amount requested or to be contributed during the first funding/budget period by each contributor. Value of in kind contributions should be included on appropriate lines as applicable. If the action will result in a dollar change to an existing award, indicate only the amount of the change. For decreases, enclose the amounts in parentheses. If both basic and supplemental amounts are included, show breakdown on an attached sheet. For multiple program funding, use totals and show breakdown using same categories as item 15.
6.	Enter Employer Identification Number (EIN) as assigned by the Internal Revenue Service.	16.	Applicants should contact the State Single Point of Contact (SPOC) for Federal Executive Order 12372 to determine whether the application is subject to the State intergovernmental review process.
7.	Select the appropriate letter in the space provided. A. State B. County C. Municipal D. Township E. Interstate F. Intermunicipal G. Special District H. Independent School District I. State Controlled Institution of Higher Learning J. Private University K. Indian Tribe L. Individual M. Profit Organization N. Other (Specify) O. Not for Profit Organization	17.	This question applies to the applicant organization, not the person who signs as the authorized representative. Categories of debt include delinquent audit disallowances, loans and taxes.
8.	Select the type from the following list: • "New" means a new assistance award. • "Continuation" means an extension for an additional funding/budget period for a project with a projected completion date. • "Revision" means any change in the Federal Government's financial obligation or contingent liability from an existing obligation. If a revision enter the appropriate letter: A. Increase Award B. Decrease Award C. Increase Duration D. Decrease Duration	18	To be signed by the authorized representative of the applicant. A copy of the governing body's authorization for you to sign this application as official representative must be on file in the applicant's office. (Certain Federal agencies may require that this authorization be submitted as part of the application.)
9.	Name of Federal agency from which assistance is being requested with this application.		
10.	Use the Catalog of Federal Domestic Assistance number and title of the program under which assistance is requested.		

BUDGET INFORMATION - Non-Construction Programs

OMB Approval No. 0348-0044

SECTION A - BUDGET SUMMARY

Grant Program Function or Activity (a)	Catalog of Federal Domestic Assistance Number (b)	Estimated Unobligated Funds		New or Revised Budget		
		Federal (c)	Non-Federal (d)	Federal (e)	Non-Federal (f)	Total (g)
1.		$	$	$	$	$ 0.00
2.						0.00
3.						0.00
4.						0.00
5. Totals		$ 0.00	$ 0.00	$ 0.00	$ 0.00	$ 0.00

SECTION B - BUDGET CATEGORIES

6. Object Class Categories	GRANT PROGRAM, FUNCTION OR ACTIVITY				Total
	(1)	(2)	(3)	(4)	(5)
a. Personnel	$	$	$	$	$ 0.00
b. Fringe Benefits					0.00
c. Travel					0.00
d. Equipment					0.00
e. Supplies					0.00
f. Contractual					0.00
g. Construction					0.00
h. Other					0.00
i. Total Direct Charges *(sum of 6a-6h)*	0.00	0.00	0.00	0.00	0.00
j. Indirect Charges					0.00
k. TOTALS *(sum of 6i and 6j)*	$ 0.00	$ 0.00	$ 0.00	$ 0.00	$ 0.00
7. Program Income	$	$	$	$	$ 0.00

Authorized for Local Reproduction

Standard Form 424A (Rev. 7-97)
Prescribed by OMB Circular A-102

Previous Edition Usable

INSTRUCTIONS FOR THE SF-424A

Public reporting burden for this collection of information is estimated to average 180 minutes per response, including time for reviewing instructions, searching existing data sources, gathering and maintaining the data needed, and completing and reviewing the collection of information. Send comments regarding the burden estimate or any other aspect of this collection of information, including suggestions for reducing this burden, to the Office of Management and Budget, Paperwork Reduction Project (0348-0044), Washington, DC 20503.

PLEASE DO NOT RETURN YOUR COMPLETED FORM TO THE OFFICE OF MANAGEMENT AND BUDGET. SEND IT TO THE ADDRESS PROVIDED BY THE SPONSORING AGENCY.

General Instructions

This form is designed so that application can be made for funds from one or more grant programs. In preparing the budget, adhere to any existing Federal grantor agency guidelines which prescribe how and whether budgeted amounts should be separately shown for different functions or activities within the program. For some programs, grantor agencies may require budgets to be separately shown by function or activity. For other programs, grantor agencies may require a breakdown by function or activity. Sections A, B, C, and D should include budget estimates for the whole project except when applying for assistance which requires Federal authorization in annual or other funding period increments. In the latter case, Sections A, B, C, and D should provide the budget for the first budget period (usually a year) and Section E should present the need for Federal assistance in the subsequent budget periods. All applications should contain a breakdown by the object class categories shown in Lines a-k of Section B.

Section A. Budget Summary Lines 1-4 Columns (a) and (b)

For applications pertaining to a *single* Federal grant program (Federal Domestic Assistance Catalog number) and *not requiring* a functional or activity breakdown, enter on Line 1 under Column (a) the Catalog program title and the Catalog number in Column (b).

For applications pertaining to a *single* program *requiring* budget amounts by multiple functions or activities, enter the name of each activity or function on each line in Column (a), and enter the Catalog number in Column (b). For applications pertaining to multiple programs where none of the programs require a breakdown by function or activity, enter the Catalog program title on each line in *Column* (a) and the respective Catalog number on each line in Column (b).

For applications pertaining to *multiple* programs where one or more programs *require* a breakdown by function or activity, prepare a separate sheet for each program requiring the breakdown. Additional sheets should be used when one form does not provide adequate space for all breakdown of data required. However, when more than one sheet is used, the first page should provide the summary totals by programs.

Lines 1-4, Columns (c) through (g)

For new applications, leave Column (c) and (d) blank. For each line entry in Columns (a) and (b), enter in Columns (e), (f), and (g) the appropriate amounts of funds needed to support the project for the first funding period (usually a year).

For continuing grant program applications, submit these forms before the end of each funding period as required by the grantor agency. Enter in Columns (c) and (d) the estimated amounts of funds which will remain unobligated at the end of the grant funding period only if the Federal grantor agency instructions provide for this. Otherwise, leave these columns blank. Enter in columns (e) and (f) the amounts of funds needed for the upcoming period. The amount(s) in Column (g) should be the sum of amounts in Columns (e) and (f).

For supplemental grants and changes to existing grants, do not use Columns (c) and (d). Enter in Column (e) the amount of the increase or decrease of Federal funds and enter in Column (f) the amount of the increase or decrease of non-Federal funds. In Column (g) enter the new total budgeted amount (Federal and non-Federal) which includes the total previous authorized budgeted amounts plus or minus, as appropriate, the amounts shown in Columns (e) and (f). The amount(s) in Column (g) should not equal the sum of amounts in Columns (e) and (f).

Line 5 - Show the totals for all columns used.

Section B Budget Categories

In the column headings (1) through (4), enter the titles of the same programs, functions, and activities shown on Lines 1-4, Column (a), Section A. When additional sheets are prepared for Section A, provide similar column headings on each sheet. For each program, function or activity, fill in the total requirements for funds (both Federal and non-Federal) by object class categories.

Line 6a-i - Show the totals of Lines 6a to 6h in each column.

Line 6j - Show the amount of indirect cost.

Line 6k - Enter the total of amounts on Lines 6i and 6j. For all applications for new grants and continuation grants the total amount in column (5), Line 6k, should be the same as the total amount shown in Section A, Column (g), Line 5. For supplemental grants and changes to grants, the total amount of the increase or decrease as shown in Columns (1)-(4), Line 6k should be the same as the sum of the amounts in Section A, Columns (e) and (f) on Line 5.

Line 7 - Enter the estimated amount of income, if any, expected to be generated from this project. Do not add or subtract this amount from the total project amount, Show under the program

INSTRUCTIONS FOR THE SF-424A (continued)

narrative statement the nature and source of income. The estimated amount of program income may be considered by the Federal grantor agency in determining the total amount of the grant.

Section C. Non-Federal Resources

Lines 8-11 Enter amounts of non-Federal resources that will be used on the grant. If in-kind contributions are included, provide a brief explanation on a separate sheet.

Column (a) - Enter the program titles identical to Column (a), Section A. A breakdown by function or activity is not necessary.

Column (b) - Enter the contribution to be made by the applicant.

Column (c) - Enter the amount of the State's cash and in-kind contribution if the applicant is not a State or State agency. Applicants which are a State or State agencies should leave this column blank.

Column (d) - Enter the amount of cash and in-kind contributions to be made from all other sources.

Column (e) - Enter totals of Columns (b), (c), and (d).

Line 12 - Enter the total for each of Columns (b)-(e). The amount in Column (e) should be equal to the amount on Line 5, Column (f), Section A.

Section D. Forecasted Cash Needs

Line 13 - Enter the amount of cash needed by quarter from the grantor agency during the first year.

Line 14 - Enter the amount of cash from all other sources needed by quarter during the first year.

Line 15 - Enter the totals of amounts on Lines 13 and 14.

Section E. Budget Estimates of Federal Funds Needed for Balance of the Project

Lines 16-19 - Enter in Column (a) the same grant program titles shown in Column (a), Section A. A breakdown by function or activity is not necessary. For new applications and continuation grant applications, enter in the proper columns amounts of Federal funds which will be needed to complete the program or project over the succeeding funding periods (usually in years). This section need not be completed for revisions (amendments, changes, or supplements) to funds for the current year of existing grants.

If more than four lines are needed to list the program titles, submit additional schedules as necessary.

Line 20 - Enter the total for each of the Columns (b)-(e). When additional schedules are prepared for this Section, annotate accordingly and show the overall totals on this line.

Section F. Other Budget Information

Line 21 - Use this space to explain amounts for individual direct object class cost categories that may appear to be out of the ordinary or to explain the details as required by the Federal grantor agency.

Line 22 - Enter the type of indirect rate (provisional, predetermined, final or fixed) that will be in effect during the funding period, the estimated amount of the base to which the rate is applied, and the total indirect expense.

Line 23 - Provide any other explanations or comments deemed necessary.

SURVEY ON ENSURING EQUAL OPPORTUNITY FOR APPLICANTS

OMB No. 1890-0014 Exp. 1/31/2006

Purpose: The Federal government is committed to ensuring that all qualified applicants, small or large, non-religious or faith-based, have an equal opportunity to compete for Federal funding. In order for us to better understand the population of applicants for Federal funds, we are asking nonprofit private organizations (not including private universities) to fill out this survey.

Upon receipt, the survey will be separated from the application. Information provided on the survey will not be considered in any way in making funding decisions and will not be included in the Federal grants database. While your help in this data collection process is greatly appreciated, completion of this survey is voluntary.

Instructions for Submitting the Survey: If you are applying using a hard copy application, please place the completed survey in an envelope labeled "Applicant Survey." Seal the envelope and include it along with your application package. If you are applying electronically, please submit this survey along with your application.

Applicant's (Organization) Name: _____

Applicant's DUNS Number: _____

Grant Name: _____ **CFDA Number:** _____

1. Does the applicant have 501(c)(3) status?

   ☐ Yes ☐ No

2. How many full-time equivalent employees does the applicant have? *(Check only one box).*

   ☐ 3 or Fewer ☐ 15-50
   ☐ 4-5 ☐ 51-100
   ☐ 6-14 ☐ over 100

3. What is the size of the applicant's annual budget? *(Check only one box.)*

   ☐ Less Than $150,000
   ☐ $150,000 - $299,999
   ☐ $300,000 - $499,999
   ☐ $500,000 - $999,999
   ☐ $1,000,000 - $4,999,999
   ☐ $5,000,000 or more

4. Is the applicant a faith-based/religious organization?

   ☐ Yes ☐ No

5. Is the applicant a non-religious community-based organization?

   ☐ Yes ☐ No

6. Is the applicant an intermediary that will manage the grant on behalf of other organizations?

   ☐ Yes ☐ No

7. Has the applicant ever received a government grant or contract (Federal, State, or local)?

   ☐ Yes ☐ No

8. Is the applicant a local affiliate of a national organization?

   ☐ Yes ☐ No

Survey Instructions on Ensuring Equal Opportunity for Applicants

Provide the applicant's (organization) name and DUNS number and the grant name and CFDA number.

1. 501(c)(3) status is a legal designation provided on application to the Internal Revenue Service by eligible organizations. Some grant programs may require nonprofit applicants to have 501(c)(3) status. Other grant programs do not.

2. For example, two part-time employees who each work half-time equal one full-time equivalent employee. If the applicant is a local affiliate of a national organization, the responses to survey questions 2 and 3 should reflect the staff and budget size of the local affiliate.

3. Annual budget means the amount of money your organization spends each year on all of its activities.

4. Self-identify.

5. An organization is considered a community-based organization if its headquarters/service location shares the same zip code as the clients you serve.

6. An "intermediary" is an organization that enables a group of small organizations to receive and manage government funds by administering the grant on their behalf.

7. Self-explanatory.

8. Self-explanatory.

Paperwork Burden Statement

According to the Paperwork Reduction Act of 1995, no persons are required to respond to a collection of information unless such collection displays a valid OMB control number. The valid OMB control number for this information collection is 1890-0014. The time required to complete this information collection is estimated to average five (5) minutes per response, including the time to review instructions, search existing data resources, gather the data needed, and complete and review the information collection. **If you have any comments concerning the accuracy of the time estimate(s) or suggestions for improving this form, please write to:** U.S. Department of Education, Washington, D.C. 2202-4651.

If you have comments or concerns regarding the status of your individual submission of this form, write directly to: Joyce I. Mays, Application Control Center, U.S. Department of Education, 7th and D Streets, SW, ROB-3, Room 3671, Washington, D.C. 20202-4725

OMB No. 1890-0014 Exp. 1/31/2006

[FR Doc. 05–8366 Filed 4–25–05; 8:45 am]
BILLING CODE 4510–30–C

DEPARTMENT OF LABOR

Employment and Training Administration

Workforce Investment Act—Migrants and Seasonal Farmworker Programs Solicitation for Grant Applications—National Farmworker Jobs Program, Housing Assistance for Program Year 2005

AGENCY: Employment and Training Administration, Labor.

ACTION: New. Initial announcement of a grant competition for operating the Housing Assistance portion of the National Farmworkers Jobs Program (NFJP), under Section 167 of the Workforce Investment Act of 1998 (WIA), 29 U.S.C. 9201.

Funding Opportunity Number: SGA/DFA PY 04–07.
Catalog of Federal Domestic Assistance (CFDA) Number: 17.264.

SUMMARY: The U.S. Department of Labor (the Department or DOL), Employment and Training Administration (ETA), Office of National Programs (ONP), Division of Seasonal Farmworker Programs (DSFP), announces a grant competition for operating the housing assistance portion of the National Farmworker Jobs Program (NFJP), under Section 167 of the Workforce Investment Act of 1998 (WIA), 29 U.S.C. 9201. All applicants for grant funds should read this notice in its entirety.

Section 167, paragraph (a) of WIA requires the Secretary to award grants or contracts on a competitive basis to eligible entities for the purposes of carrying out the activities authorized under Section 167. Although housing assistance is identified in WIA as one of the allowable activities under the NFJP, Congressional appropriations language directs the Department to make available a specific amount of the funds appropriated for the NFJP for migrant and seasonal farmworkers housing assistance grants, and that no less than 70 percent of the specified amount must be used for permanent housing activities. Therefore, under this solicitation, of the $4,544,682 appropriated for NFJP housing assistance, approximately $3,131,217 will be available for permanent housing assistance and approximately $1,413,465 for temporary and/or emergency housing assistance.

Key Dates: The closing date for receipt of applications under this announcement is May 27, 2005. Applications must be received at the address below no later than 5 p.m. eastern time.

ADDRESSES: Applications must be directed to the U.S. Department of Labor, Employment and Training Administration, Division of Federal Assistance, Attention: James Stockton, Room N–4438, 200 Constitution Avenue, NW., Washington, DC 20210.

I. Supplementary Information

Funding Opportunity Description

The U.S. Department of Labor, Employment and Training Administration, Office of National Programs, Division of Seasonal Farmworker Programs is requesting applications for grants to operate the housing assistance portion of the National Farmworker Jobs Program (NFJP) in accordance with section 167 of WIA, 29 U.S.C. 9201. The NFJP serves economically disadvantaged persons who primarily depend on employment in agricultural labor performed within the United States, including Puerto Rico, and who experience chronic unemployment or underemployment. Housing assistance is a supportive service offered to assist migrant and seasonal farmworkers to retain employment or enter into or complete training. Funds for housing assistance activities are made available through the NFJP appropriation included in the Consolidated Appropriations Act, 2005 (Pub. L. 108–447).

Housing assistance under the NFJP became available three decades ago as a tool to improve economic outcomes for farmworkers and was included as one of a number of supportive services to assist farmworkers to retain employment or enter into and/or remain in training. The NFJP regulations consider housing assistance as one of a number of related assistance and/or supportive services available to eligible farmworkers through the NFJP (20 CFR 669.430). Over time, however, a strong link between the provision of housing assistance and achievement of employment, training, and earnings gains has eroded.

To once again establish a strong link between housing assistance activities and improved economic outcomes for farmworkers, the Department engaged in a dialogue process with current and former housing assistance grantees to develop a set of principles and definitions of housing assistance that renewed the focus on employment and training objectives in future solicitations/competitions. The results of the dialogue are the Guiding Principles and Definitions that follow:

Guiding Principles

Housing assistance should leverage improved economic outcomes for farmworkers—Housing assistance should enable migrant and seasonal farmworkers to retain employment, enter into, or complete job training activities, and improve their earnings. Housing is a service that supports the economic objectives of the NFJP.

Housing assistance services, and the strategies used to deliver them, should meet the needs of all farmworkers—Farmworkers seeking to improve their economic future have diverse housing needs. Moreover, these needs are not static but change over time. Strategies used to meet these diverse and dynamic housing assistance needs must be flexible and based on a mix of permanent and temporary housing and emergency assistance solutions tailored to regional and local needs.

Housing developed with WIA 167 (NFJP) funding should be actively marketed, and broadly accessible, to NFJP-eligible farmworkers—While occupancy of year-round and migrant rental units is not restricted to NFJP-eligible farmworkers, the strong link between housing assistance and the economic objectives of the NFJP should translate directly into broad access by NFJP farmworkers to housing assistance. Providing housing assistance to NFJP-eligible farmworkers should be a priority.

Definitions

Permanent Housing (and its corresponding housing assistance services) is defined as housing intended to be owner-occupied, or occupied on a permanent, year-round basis (notwithstanding ownership) as the farmworker's primary residence to which he/she typically returns at the end of the work or training day, and assists the farmworker to stay employed or enter into or complete job training.

Permanent housing (services) includes: rental units, single family, duplexes, and other multi-family structures, dormitory, group home and other housing types that provide short-term, seasonal, or year-round housing opportunities in permanent structures. Modular structures, manufactured housing or mobile units placed on permanent foundations and supplied with appropriate utilities and other infrastructure are also considered permanent housing.

Managing permanent housing assistance activities may require investments in development services, project management, resource development to secure acquisition,

construction/renovation and operating funds, property management services and program management. New construction, purchase of existing structures, and rehabilitation of existing structures, as well as the infrastructure, utilities and other improvements necessary to complete or maintain those structures may also be considered part of managing permanent housing.

Temporary housing (and its corresponding housing services, including emergency housing assistance) is defined as housing intended to meet the farmworker's need to temporarily occupy a unit of housing for reasons related to seeking or retaining employment, or engaging in training. It is not owner-occupied housing, and those farmworkers most likely to utilize it are those engaged in migratory employment or seasonal workers whose employment requires occasional travel outside their normal commuting area.

Temporary housing includes housing units intended for temporary occupancy located in permanent structures, such as rental units in an apartment complex. Yurts, mobile structures, and tents that provide short-term, seasonal housing opportunities are also included. They may be moved from site to site, dismantled and re-erected when needed for farmworker occupancy, closed during the off-season, or other similar arrangements.

Temporary housing may also be off-farm housing operated independent of employer interest in or control of the housing, or on-farm housing operated by a non-profit but located on property owned by an agricultural employer.

Managing temporary housing assistance may involve property management of temporary housing facilities, case management and referral services, and emergency housing payments, including vouchers and cash payments for rent/lease and utilities.

Applicants must design their programs around the aforementioned Guiding Principles and Definitions. Separate applications (and separate budgets) will be required depending on the services proposed: permanent housing assistance only; temporary and/or emergency housing assistance; or a mix of both permanent and temporary services.

Applicants may propose to provide permanent housing assistance services only or temporary/emergency housing assistance services only. The proposal must describe the proposed housing services to be provided and discuss the reasons why the proposed service mix is best suited to meet the employment and training and program performance objectives of the NFJP. Awards made in cases where housing assistance services are proposed in a single category only (permanent or temporary/emergency) will reflect ETA's compliance with the Congressional mandate that seventy (70) percent of housing assistance funds be used to provide permanent housing assistance services.

Applicants proposing to offer a mix of housing assistance services must clearly describe the permanent and temporary/emergency housing assistance services proposed to be provided, and discuss the reasons why the proposed service mix is best suited to meet the employment and training and program performance objectives of the NFJP. Separate budgets must be submitted for permanent and temporary/emergency housing assistance, respectively. These separate budget requests must conform to the Congressional mandate that seventy (70) percent of housing assistance funds be used to provide permanent housing assistance services.

Housing assistance under the NFJP is subject to the requirements of WIA Section 167 and the Department's regulations at 20 CFR part 669. This program is also subject to the requirements of 29 CFR parts 93 (New Restrictions on Lobbying), 96 (Audit Requirements), and 98 (Debarment, Suspension, and Drug-Free Workplace Requirements); as well as the Department's non-discrimination regulations at 29 CFR part 34 and the non-discrimination regulations implementing WIA Section 188 at 29 CFR part 37. Applicants should be familiar with and consult the WIA regulations at 20 CFR parts 660 through 671 in developing their grant proposals. Should the regulations at part 669 of WIA conflict with regulations elsewhere in 20 CFR, the regulations at part 669 will control.

In addition, this program is subject to the provisions of the ''Jobs for Veterans Act,'' Public Law 107–288, which provides priority of service to veterans and certain of their spouses in all Department of Labor-funded job training programs. Please note that, to obtain priority of service, a veteran must first meet the NFJP's eligibility requirements.

During PY 2005, DSFP will work with grantees to develop a reporting and performance management and accountability system that allows for improved tracking of activities and performance results. Until such system is established, applicants awarded grants will be expected to report in narrative form on a quarterly basis. Instructions will be provided to organizations once grants are awarded.

II. Award Information

The type of assistance instrument to be used for the NFJP Housing Assistance program is a grant. Grants awarded through this solicitation will be for a two-year period, as prescribed in WIA Section 167. Please be advised that the Consolidated Appropriations Act, 2005 (P.L. 108–447) provided funding for the NFJP for PY 2005 only (July 1, 2005, through June 30, 2006). Therefore, second year funding will be dependent on the availability of funding through the FY 2006 appropriations process.

The amount available nationally for the NFJP Housing Assistance program is $4,544,682. The FY 2005 appropriation for this program provides that no less than 70 percent of this amount shall be used for permanent housing activities. Therefore, approximately $3,131,217 will be available for permanent housing activities, and $1,413,465 will be available for temporary and emergency housing activities. Applicants are reminded that separate budgets and descriptions of activities are required for permanent and temporary and/or emergency housing assistance, in cases where the applicant organization intends to provide both types of services.

In the past, housing grantees have typically provided housing assistance services in more than one State or area of a State. Therefore, for applications covering more than one area, applicants will be required to submit detailed information about the services to be provided in each of the areas covered by the proposal, including information regarding sub-grantees, if any. The application will also have to provide a detailed budget for each of the sub-grantees and describe the housing assistance services to be conducted by each sub-grantee. Applications that propose to use sub-grantees but contain one budget for the entire project, without the breakdown for the sub-grantees, will be considered non-responsive and will not be reviewed.

The number and funding amount of a grant will vary depending on the number of applications received and found to be fundable. In the past, awards have ranged from approximately $150,000 to approximately $1,000,000.

Note: Selection of an organization as a grantee does not constitute approval of the grant application as submitted. Before the actual grant is awarded, the Department may enter into negotiations about such items as program components, the budget proposal, staffing and funding levels, and administrative systems in place to support grant implementation. If the negotiations do not result in a mutually acceptable submission, the Grant Officer reserves the

right to terminate the negotiation and decline to fund the application.

III. Eligibility Information

Eligible Applicants: Applicants need not be a current or prior housing assistance grantee to establish eligibility to be awarded a grant under this solicitation. State agencies and State Boards, LWIBs, and faith-based and community organizations are examples of the entities eligible to apply for a grant award.

To provide housing assistance services to eligible migrant and seasonal farmworkers under WIA Section 167, whether permanent, temporary/emergency, or a mix of both, the Department will select those proposals that are deemed most responsive to the requirements of this solicitation, as reviewed and scored during the review panel process. To that end, proposals must show that the applicant:

—Has an understanding of the housing market in the area(s) they propose to serve, as well as an understanding of the housing needs of migrant and seasonal farmworkers;

—Has a familiarity with the housing conditions in the proposed service area, the housing assistance available from other agencies in the service area, and the impact of both those elements on the housing needs of farmworkers; and

—Has the capacity to effectively administer a housing assistance program with the proper administrative and fiscal oversight and integrity.

Additionally, to be responsive to the requirements of this solicitation, applicants must demonstrate how the proposed service plan will support the Guiding Principles described in Section I of this solicitation.

Applicants must describe their collaboration and working relationships with other agencies in the proposed service area that may provide housing or employment assistance, such as the One-Stop system and the wider community of social service agencies, including faith-based and community organizations. The proposal should describe the expected results of those relationships on the development of and enhanced housing assistance services for farmworkers under this grant, if an award is made.

Cost Sharing or Matching—The WIA Section 167 program does not require grantees to share costs or provide matching funds.

Other Eligibility Criteria—In accordance with 29 CFR part 98, entities that are debarred or suspended are excluded from Federal financial assistance and are ineligible to receive a WIA Section 167 housing assistance grant.

Prior to awarding a grant, the Department will conduct a responsibility review of each potential grantee through available records. The responsibility review relies on testing available records to determine if an applicant has a satisfactory history of accounting for Federal funds and property. The responsibility review is independent of the competitive process. Applicants failing to meet the requirements of this section may be disqualified for selection as grantees, irrespective of their standing in the competition. Any applicant not selected as a result of the responsibility review will be advised of their appeal rights. The responsibility tests that will be applied are those present in the WIA regulations (20 CFR 667.170).

Legal Rules Pertaining to Inherently Religious Activities by Organizations That Receive Federal Financial Assistance—The government is generally prohibited from providing direct financial assistance for inherently religious activities. Please note that, in this context, the term direct financial assistance means financial assistance that is provided directly by a government entity or an intermediate organization, as opposed to financial assistance that an organization receives as the result of the genuine and independent private choice of a beneficiary. These grants may not be used for religious instruction, worship, prayer, proselytizing, or other inherently religious activities. Neutral, non-religious criteria that neither favor nor disfavor religion must be utilized in the selection of grant recipients and sub-recipients.

IV. Application and Submission Information

Address To Request Application Package—This SGA includes all information and forms needed to apply for this funding opportunity. If additional copies of forms are needed, they can be found at *http://www.doleta.gov/msfw.*

Content and Form of Application Submission—An application must include two (2) separate and distinct parts: Part I—a cost proposal, and Part II—a technical proposal. Applications that fail to adhere to the instructions in this section will be considered non-responsive and will not be considered. Part I of the proposal is the Cost Proposal and must include the following items:

- A cover letter, an original plus two (2) copies of the proposal, and an ink-signed original SF 424, ''Application for Federal Assistance,'' (Appendix A) must be submitted. Beginning October 12, 2003, all applicants for federal grant and funding opportunities are required to have a Dun and Bradstreet (DUNS) number (see OMB Notice of Final Policy Issuance, 68 FR 38402, dated June 27, 2003). Applicants must supply their DUNS number in item #5 of the new SF 424 issued by OMB (Rev. 9–2003). The DUNS number is a nine-digit identification number that uniquely identifies business entities. Obtaining a DUNS number is easy and there is no charge. To obtain a DUNS number, access this Web site: *http://www.dunandbradstreet.com* or call 1–866–705–5711.
- The Standard Form (SF) 424–A (Appendix B). In preparing the budget form, the applicant must provide a concise narrative explanation to support the request. The budget narrative should break down the budget and discuss precisely how the administrative costs support the project goals.
- Part II of the application is the Technical Proposal, which demonstrates the applicant's capabilities to plan and implement the grant project in accordance with the provisions of this solicitation. The Technical Proposal should be limited to 20 numbered pages, double-spaced and single-sided, in 12-point text font and one-inch margins. Letters of support and any required attachments will not be subject to the page limitations; letters of support will not be included in the materials provided to the panel for review of the proposal.
- No cost data or reference to prices should be included in the Technical Proposal. Instead, applicants should include a two-page abstract summarizing the proposed project and applicant profile information including the applicant's name, the project title, and the funding level requested. The two-page abstract is not included in the 20-page limitation.

Applications that do not meet these requirements will not be considered.

Submission Dates and Times

The closing date for receipt of applications under this announcement is May 27, 2005. Applications must be received at the address below no later than 5 p.m. eastern time. Applications sent by e-mail, telegram, or facsimile (fax) will not be accepted. Applications that do not meet the conditions set forth in this notice will not be honored. No exceptions to the mailing and delivery

requirements set forth in this notice will be granted.

Mailed applications must be addressed to the U.S. Department of Labor, Employment and Training Administration, Division of Federal Assistance, Attention: James Stockton, Reference SGA/DFA PY 04–07, 200 Constitution Avenue, NW., Room N–4438, Washington, DC 20210. Applicants are advised that mail delivery in the Washington, DC area may be delayed due to mail decontamination procedures. Hand-delivered proposals will be received at the above address.

Applicants may apply online at *http://www.grants.gov.* For applicants submitting electronic applications via grants.Gov, it is strongly recommended that you immediately initiate and complete the ''Get Started'' steps to register with grants.gov, at *http://www.grants.gov/GetStarted.* Registration will probably take multiple days to complete which should be factored into plans for electronic application submission in order to avoid facing unexpected delay that could result in the rejection of your application. It is recommended that applicants experiencing problems with electronic submission submit their application by overnight mail until the electronic issues are resolved.

Late Applications

Any application received after the exact date and time specified for receipt at the office designated in this notice will not be considered, unless it is received before awards are made and it (a) was sent by the U.S. Postal Service registered or certified mail no later than the fifth calendar day before the date specified for receipt of applications (*e.g.*; an application required to be received by the 20th of the month must be postmarked by the 15th of that month); or (b) was sent by the U.S. Postal Service Express Mail or Online to addressee no later than 5 p.m. at the place of mailing or electronic submission one (1) day prior to the date specified for receipt of applications. It is highly recommended that online submissions be completed one working day prior to the date specified for receipt of applications to ensure that the applicant still has the option to submit by U.S. Postal Service Express Mail in the event of any electronic submission problems. ''Post marked'' means a printed, stamped, or otherwise place impression (exclusive of a postage meter machine impression) that is readily identifiable, without further action, as having been supplied or affixed on the date of mailing by an employee of the U.S. Postal Service. Therefore, applicants should request the postal clerk to place a legible hand cancellation ''bull's eye'' postmark on both the receipt and the package. Failure to adhere to the above instructions will be basis for a determination of nonresponsiveness.

Intergovernmental Review—Executive Order (E.O.) No. 12372, ''Intergovernmental Review of Federal Programs,'' and the implementing regulations at 29 CFR part 17 are applicable to this program. Under these requirements, an applicant must provide a copy of the funding proposal for comment to the States that have established a consultation process under the E.O. Applications must be submitted to the State's Single Point of Contact (SPOC), no later than the deadline for submission of the application to the Department. For States that have not established a consultative process under E.O. 12372, but have a State Workforce Investment Board (State Board), the State Board will be the SPOC. For WIA implementation purposes, this consultative process fulfills the requirement of WIA Section 167(e) concerning consultation with Governors and Local Workforce Investment Boards (LWIB). To strengthen the implementation of the E.O., the Department establishes a timeframe for the treatment of comments from the State's SPOC on WIA Section 167 applications (including housing assistance). The SPOC must submit comments, if any, to the Department and the applicant no later than 30 days after the deadline for submission of the application. The applicant's response to the SPOC comments, if any, must be submitted to the Department no later than 15 days after the postmarked date of the comments from the SPOC. The Department will notify the SPOC of its decision regarding the SPOC comments and the applicant's response, and implement that decision within 10 days after notification to the SPOC.

The names and addresses of the SPOCs are listed in the Office of Management and Budget's (OMB) home page at *http://www.whitehouse.gov/omb/grants/spoc.html.*

Funding Restrictions—As mentioned earlier in this document, appropriations language requires that no less than 70 percent of the funds available through this solicitation must be spent on permanent housing activities. Given this requirement, applicants should clearly identify the types of housing assistance services that will be provided to farmworkers, particularly in cases where an applicant is proposing to provide both permanent and temporary housing assistance.

Applicants are advised that the requirement to spend 70 percent of the funds available through this solicitation on permanent housing may affect the number of applications funded and/or the amount of funding per grant.

Administrative costs are limited to fifteen (15) percent of the grant (see definition of administrative costs at 20 CFR part 667.220). Administrative costs higher than fifteen (15) percent will not be approved.

Other Submission Requirements—All other submission materials are identified in the various sections of this solicitation.

V. Application Review Information

Criteria—The following full review criteria, totaling a maximum of 100 points, applies to all applications:

Understanding the Housing Assistance Needs of the Eligible Migrant and Seasonal Farmworkers in the Proposed Service Area(s)—20 Points

Understanding the housing market in the proposed service area(s) and the problems faced by migrant and seasonal farmworkers in accessing that market is critical to the formulation of an effective housing assistance strategy. In addition, an effective strategy of outreach to migrant and seasonal farmworkers is essential to meeting their housing assistance needs.

Applicants must describe the housing market in the proposed service area(s), including a description of employer-provided housing, if any; publicly-subsidized housing, if any; and the problems encountered by migrant and seasonal farmworkers in accessing affordable housing. Include a discussion of the problems faced by migrant and seasonal farmworkers in getting and keeping a job, or in participating in training activities that lead to improved economic outcomes, as a result of housing needs going unmet. Applicants must also describe their strategy for identifying and conducting outreach to eligible farmworkers with housing needs. In cases where a number of different organizations are jointly applying, this section must include the requested information for each of the areas covered by the potential sub-grantee organizations.

Scoring on this factor will be based on the quality of the applicant's analysis of the housing market in the area(s) of proposed services, including any studies and analyses conducted to determine farmworker housing assistance needs. Scoring will also take into account the quality of the

applicant's analysis of housing assistance available through other housing assistance organizations, including faith-based and community organizations, and the applicants' plans to integrate their housing assistance services with those already present in the proposed area(s). The applicant's analysis must demonstrate a depth of knowledge about the housing market in the service area(s) and how housing availability impacts a farmworker's ability to obtain and retain employment, or participate in training or other activities that lead to improved economic outcomes.

Familiarity With the Proposed Service Area(s)—20 Points

Familiarity with the housing conditions in the proposed service area(s) and the housing assistance available from other sources in that area(s) is essential to providing housing assistance services that are appropriate for the migrant and seasonal farmworkers in need of services and to assure non-duplicative use of WIA Section 167 housing assistance funds.

Applicants must provide an analysis of the housing assistance resources available from all sources in the proposed service area(s), including employer-sponsored housing, State and local agencies, the One-Stop system, and housing assistance organizations, including faith-based and community organizations. Applicants must describe their efforts to engage these resources on behalf of farmworkers, including any successful efforts in the past, and the results of those efforts. Applicants must also describe the strategies they propose for eligible migrant and seasonal farmworkers, emphasizing the different strategies for each farmworker population. In cases where a number of different organizations are jointly applying, this section must include the requested information for each of the areas covered by the potential sub-grantees.

Scoring on this factor will be based on the comprehensiveness and quality of the mapping of housing assistance resources available from sources other than WIA Section 167 funds, and the effectiveness of the applicant's strategy for using other housing assistance funds to maximize the housing assistance services available to migrant and seasonal farmworkers.

Administrative Capacity—20 Points

The capacity to effectively administer a housing assistance program is contingent on effective and efficient systems to assure program and fiscal oversight and integrity.

Applicants must describe the management information and performance management systems to be used for reporting, and its performance accountability and management, fiscal management, and case management systems. The applicant must include a clear description of its experience with performance management systems and how the results achieved were applied to improved customer service. The discussion should include a description of how eligibility to receive housing assistance services will be determined, including how that ties to improved employment outcomes, as well a discussion of whether the criteria used to determine eligibility differs among migrant and seasonal farmworker groups, and, if so, what the differences are, and the rationale for them.

Applicants must also describe their recordkeeping system in sufficient detail to demonstrate that it is sufficient to prepare financial reports and to trace funds to adequate levels of expenditures to ensure lawful spending.

Please note that in cases where a number of different organizations are applying together, the lead agency will be expected to prepare a ''roll-up'' or aggregated report that clearly identifies the expenditures of each sub-grantee individually, as well as the combined total.

The WIA Section 167 housing assistance program is required to use electronic reporting via the Internet. The applicant must describe its capacity to provide the equipment (including PCs, software for word processing and spreadsheets, individual e-mail accounts), access (including Internet access), and staff qualified to perform on-line reporting.

Scoring on this factor will be based on the quality and comprehensiveness of evidence presented to demonstrate that the applicant has effective management, program and fiscal accounting and reporting systems.

Proposed Activities and Services—40 Points

The applicant's discussion of the proposed approach to providing specific housing assistance services (permanent, temporary/emergency, or both) is the most important single element of the application. With regard to the requirements below, this section should clearly indicate whether different housing services strategies will be employed to meet the housing and related employment and training needs of seasonal farmworkers versus migrant farmworkers.

Permanent Housing Assistance

Applicants proposing to carry out permanent housing activities only must describe their system for identifying farmworkers in need of permanent housing assistance, including the process for eligibility determination and coordination with the NFJP grantee and the overall One-Stop system in the state to ensure that the housing assistance supports an employment outcome or training objective for farmworkers eligible for NFJP services.

The plan must describe all the phases of the permanent housing project, including pre-development activities, housing development, construction, lease-up, and post-leasing activities (or the activities leading to successful rehabilitation of existing permanent housing), and include a timeline that estimates the length of time required for each project to be undertaken. It must include a description of the housing counseling activities to be provided to farmworkers (including information on first-time home ownership); technical assistance to other housing organizations, if appropriate; and a description of the system that will be used to capture the number of referrals made from the NFJP grantee or other One-Stop system partners to permanent housing facilities or units established through a permanent housing program. The plan should include an estimate of the number of farmworkers to be assisted through the permanent housing program, and an estimate of how many of those farmworkers are also NFJP-eligible farmworkers.

Temporary and/or Emergency Housing Assistance

Applicants proposing to carry out temporary and/or emergency housing assistance only must describe their system for identifying farmworkers in need of temporary and/or emergency housing assistance, including the process for eligibility determination and coordination with the NFJP grantee in the State to ensure that the housing assistance supports an employment outcome or training objective for those farmworkers who are NFJP-eligible, as well as other One-Stop partner programs that might make referrals. The plan must include a description of the case management approach to be used and the way the organization proposes to manage the delivery of temporary and/or emergency housing assistance services. It must also describe the specific housing assistance services to be offered and the estimated number of migrant and seasonal farmworkers to be served through each proposed service

(*i.e.*, temporary and emergency housing, respectively). Separate information should be provided for temporary housing and for emergency housing. The plan must also describe how eligible farmworkers' housing assistance will be coordinated with training and related assistance services provided through the NFJP grantee if the applicant did not apply for or is not awarded an NFJP grant, as well as the Local Workforce Investment Board(s), which oversees strategic planning for all One-Stop partner programs.

Permanent and Temporary/Emergency Housing Assistance—Applicants proposing to conduct a plan of service that encompasses both permanent and temporary and emergency housing activities must provide all of the information requested above.

All applicants are responsible for clearly identifying the organization that will be responsible for delivering the services, whether permanent or temporary and/or emergency, in each proposed service area, *i.e.,* the descriptions requested above must be included for each organization that will deliver housing services in cases where a number of different organizations are jointly applying.

Scoring on this factor will be based on evidence that the applicant has effectively used its knowledge and experience as presented in the sections listed above, as applicable, to develop a housing assistance strategy and plan of service that successfully meets the objectives of the Guiding Principles described in Section I of this solicitation and is appropriately tailored to meet the needs of migrant and seasonal farmworkers in the service area(s).

Review and Selection Process

The Grant Officer will select potential grantees utilizing all information available to him/her. A review panel will rate each proposal according to the criteria specified in this solicitation. Panel reviews are critical to the selection of grantees but are advisory in nature, and their recommendations are not binding on the Grant Officer. The Grant Officer may, at his/her discretion, request an applicant to submit additional or clarifying information if needed to make a selection. Please note that selections may be made without further contact with the applicants. In such situations, an award will be based on the SF 424, which constitutes a binding offer.

VI. Award Administration Information

Award Notices

The Grant Officer will notify applicants, in writing, if they are selected as potential grantees. The notification will invite each potential grantee to negotiate the final terms and conditions of the grant as applicable, will establish a reasonable time and place for negotiations, and will indicate the specific service delivery area and amount of funds to be allocated under the grant. FY 2005 funds will be awarded for the period July 1, 2005, through June 30, 2006, and will be available for expenditure for two years.

An applicant that is not selected as a potential grantee or whose application has been denied in whole or in part by the Department will be notified in writing by the Grant Officer and advised of all appeal rights.

Administrative and National Policy Requirements

There are no additional administrative or national policy requirements besides those discussed elsewhere in this solicitation.

Reporting

Reporting for the WIA Section 167 housing assistance program is under development; applicants awarded grants will be apprised of the progress of the development and the implications for grantees. Grantees will be required to submit reports on financial expenditures on a quarterly basis. In addition, until the reporting system is operational, grantees will be required to submit narrative reports on program participation and participant outcomes.

VII. Agency Contacts

Questions related to this solicitation may be directed to Ms. Mamie Williams, Grants Management Specialist, phone (202) 693–3341; fax: (202) 693–2879 (this is not a toll-free number). Please include a contact name, fax and telephone number.

This announcement is also being made available on the ETA Web site at *http://doleta.gov/sga/sga.cfm* and *http://www.grants.gov.*

Signed at Washington, DC, this 21st day of April, 2005.

James W. Stockton,

Grant Officer.

Attachments:

Appendix A: SF–424—Application for Federal Assistance

Appendix B: SF–424 (A)—Budget Information Form

Appendix C: OMB Survey N. 1890–0014: Survey on Ensuring Opportunity for Applications

BILLING CODE 4510–30–P

APPLICATION FOR FEDERAL ASSISTANCE

Version 7/03

2. DATE SUBMITTED	Applicant Identifier	
3. DATE RECEIVED BY STATE	State Application Identifier	
4. DATE RECEIVED BY FEDERAL AGENCY	Federal Identifier	

1. TYPE OF SUBMISSION:

Application	Pre-application
☐ **Construction**	☐ **Construction**
☐ **Non-Construction**	☐ **Non-Construction**

5. APPLICANT INFORMATION

Legal Name:	**Organizational Unit:**
	Department:
Organizational DUNS:	Division:
Address:	**Name and telephone number of person to be contacted on matters involving this application (give area code)**
Street:	Prefix: First Name:
City:	Middle Name
County:	Last Name
State: Zip Code	Suffix:
Country:	Email:
6. EMPLOYER IDENTIFICATION NUMBER *(EIN):* ☐☐-☐☐☐☐☐☐☐	Phone Number (give area code) Fax Number (give area code)

8. TYPE OF APPLICATION:

☐ **New** ☐ **Continuation** ☐ **Revision**

If Revision, enter appropriate letter(s) in box(es)
(See back of form for description of letters.) ☐ ☐

Other (specify)

7. TYPE OF APPLICANT: (See back of form for Application Types)

Other (specify)

9. NAME OF FEDERAL AGENCY:

10. CATALOG OF FEDERAL DOMESTIC ASSISTANCE NUMBER: ☐☐-☐☐☐

TITLE (Name of Program):

11. DESCRIPTIVE TITLE OF APPLICANT'S PROJECT:

12. AREAS AFFECTED BY PROJECT *(Cities, Counties, States, etc.):*

13. PROPOSED PROJECT		**14. CONGRESSIONAL DISTRICTS OF:**	
Start Date:	Ending Date:	a. Applicant	b. Project

15. ESTIMATED FUNDING:		
a. Federal	$	.00
b. Applicant	$	.00
c. State	$	.00
d. Local	$	.00
e. Other	$	.00
f. Program Income	$	.00
g. TOTAL	$	.00

16. IS APPLICATION SUBJECT TO REVIEW BY STATE EXECUTIVE ORDER 12372 PROCESS?

a. Yes. ☐ THIS PREAPPLICATION/APPLICATION WAS MADE AVAILABLE TO THE STATE EXECUTIVE ORDER 12372 PROCESS FOR REVIEW ON

DATE:

b. No. ☐ PROGRAM IS NOT COVERED BY E. O. 12372

☐ OR PROGRAM HAS NOT BEEN SELECTED BY STATE FOR REVIEW

17. IS THE APPLICANT DELINQUENT ON ANY FEDERAL DEBT?

☐ Yes If "Yes" attach an explanation. ☐ No

18. TO THE BEST OF MY KNOWLEDGE AND BELIEF, ALL DATA IN THIS APPLICATION/PREAPPLICATION ARE TRUE AND CORRECT. THE DOCUMENT HAS BEEN DULY AUTHORIZED BY THE GOVERNING BODY OF THE APPLICANT AND THE APPLICANT WILL COMPLY WITH THE ATTACHED ASSURANCES IF THE ASSISTANCE IS AWARDED.

a. Authorized Representative

Prefix	First Name	Middle Name
Last Name		Suffix
b. Title		c. Telephone Number (give area code)
d. Signature of Authorized Representative		e. Date Signed

Previous Edition Usable
Authorized for Local Reproduction

Standard Form 424 (Rev.9-2003)
Prescribed by OMB Circular A-102

INSTRUCTIONS FOR THE SF-424

Public reporting burden for this collection of information is estimated to average 45 minutes per response, including time for reviewing instructions, searching existing data sources, gathering and maintaining the data needed, and completing and reviewing the collection of information. Send comments regarding the burden estimate or any other aspect of this collection of information, including suggestions for reducing this burden, to the Office of Management and Budget, Paperwork Reduction Project (0348-0043), Washington, DC 20503.

PLEASE DO NOT RETURN YOUR COMPLETED FORM TO THE OFFICE OF MANAGEMENT AND BUDGET. SEND IT TO THE ADDRESS PROVIDED BY THE SPONSORING AGENCY.

This is a standard form used by applicants as a required face sheet for pre-applications and applications submitted for Federal assistance. It will be used by Federal agencies to obtain applicant certification that States which have established a review and comment procedure in response to Executive Order 12372 and have selected the program to be included in their process, have been given an opportunity to review the applicant's submission.

Item:	Entry:	Item:	Entry:
1.	Select Type of Submission.	11.	Enter a brief descriptive title of the project. If more than one program is involved, you should append an explanation on a separate sheet. If appropriate (e.g., construction or real property projects), attach a map showing project location. For preapplications, use a separate sheet to provide a summary description of this project.
2.	Date application submitted to Federal agency (or State if applicable) and applicant's control number (if applicable).	12.	List only the largest political entities affected (e.g., State, counties, cities).
3.	State use only (if applicable).	13	Enter the proposed start date and end date of the project.
4.	Enter Date Received by Federal Agency Federal identifier number: If this application is a continuation or revision to an existing award, enter the present Federal Identifier number. If for a new project, leave blank.	14.	List the applicant's Congressional District and any District(s) affected by the program or project
5.	Enter legal name of applicant, name of primary organizational unit (including division, if applicable), which will undertake the assistance activity, enter the organization's DUNS number (received from Dun and Bradstreet), enter the complete address of the applicant (including country), and name, telephone number, e-mail and fax of the person to contact on matters related to this application.	15	Amount requested or to be contributed during the first funding/budget period by each contributor. Value of in kind contributions should be included on appropriate lines as applicable. If the action will result in a dollar change to an existing award, indicate only the amount of the change. For decreases, enclose the amounts in parentheses. If both basic and supplemental amounts are included, show breakdown on an attached sheet. For multiple program funding, use totals and show breakdown using same categories as item 15.
6.	Enter Employer Identification Number (EIN) as assigned by the Internal Revenue Service.	16.	Applicants should contact the State Single Point of Contact (SPOC) for Federal Executive Order 12372 to determine whether the application is subject to the State intergovernmental review process.
7.	Select the appropriate letter in the space provided. A. State B. County C. Municipal D. Township E. Interstate F. Intermunicipal G. Special District H. Independent School District I. State Controlled Institution of Higher Learning J. Private University K. Indian Tribe L. Individual M. Profit Organization N. Other (Specify) O. Not for Profit Organization	17.	This question applies to the applicant organization, not the person who signs as the authorized representative. Categories of debt include delinquent audit disallowances, loans and taxes.
8.	Select the type from the following list: • "New" means a new assistance award. • "Continuation" means an extension for an additional funding/budget period for a project with a projected completion date. • "Revision" means any change in the Federal Government's financial obligation or contingent liability from an existing obligation. If a revision enter the appropriate letter: A. Increase Award B. Decrease Award C. Increase Duration D. Decrease Duration	18	To be signed by the authorized representative of the applicant. A copy of the governing body's authorization for you to sign this application as official representative must be on file in the applicant's office. (Certain Federal agencies may require that this authorization be submitted as part of the application.)
9.	Name of Federal agency from which assistance is being requested with this application.		
10.	Use the Catalog of Federal Domestic Assistance number and title of the program under which assistance is requested.		

BUDGET INFORMATION - Non-Construction Programs

OMB Approval No. 0348-0044

SECTION A - BUDGET SUMMARY

Grant Program Function or Activity (a)	Catalog of Federal Domestic Assistance Number (b)	Estimated Unobligated Funds		New or Revised Budget		
		Federal (c)	Non-Federal (d)	Federal (e)	Non-Federal (f)	Total (g)
1.		$	$	$	$	$ 0.00
2.						0.00
3.						0.00
4.						0.00
5. Totals		$ 0.00	$ 0.00	$ 0.00	$ 0.00	$ 0.00

SECTION B - BUDGET CATEGORIES

6. Object Class Categories	GRANT PROGRAM, FUNCTION OR ACTIVITY				Total
	(1)	(2)	(3)	(4)	(5)
a. Personnel	$	$	$	$	$ 0.00
b. Fringe Benefits					0.00
c. Travel					0.00
d. Equipment					0.00
e. Supplies					0.00
f. Contractual					0.00
g. Construction					0.00
h. Other					0.00
i. Total Direct Charges *(sum of 6a-6h)*	0.00	0.00	0.00	0.00	0.00
j. Indirect Charges					0.00
k. TOTALS *(sum of 6i and 6j)*	$ 0.00	$ 0.00	$ 0.00	$ 0.00	$ 0.00
7. Program Income	$	$	$	$	$ 0.00

Authorized for Local Reproduction

Standard Form 424A (Rev. 7-97)
Prescribed by OMB Circular A-102

Previous Edition Usable

INSTRUCTIONS FOR THE SF-424A

Public reporting burden for this collection of information is estimated to average 180 minutes per response, including time for reviewing instructions, searching existing data sources, gathering and maintaining the data needed, and completing and reviewing the collection of information. Send comments regarding the burden estimate or any other aspect of this collection of information, including suggestions for reducing this burden, to the Office of Management and Budget, Paperwork Reduction Project (0348-0044), Washington, DC 20503.

PLEASE DO NOT RETURN YOUR COMPLETED FORM TO THE OFFICE OF MANAGEMENT AND BUDGET. SEND IT TO THE ADDRESS PROVIDED BY THE SPONSORING AGENCY.

General Instructions

This form is designed so that application can be made for funds from one or more grant programs. In preparing the budget, adhere to any existing Federal grantor agency guidelines which prescribe how and whether budgeted amounts should be separately shown for different functions or activities within the program. For some programs, grantor agencies may require budgets to be separately shown by function or activity. For other programs, grantor agencies may require a breakdown by function or activity. Sections A, B, C, and D should include budget estimates for the whole project except when applying for assistance which requires Federal authorization in annual or other funding period increments. In the latter case, Sections A, B, C, and D should provide the budget for the first budget period (usually a year) and Section E should present the need for Federal assistance in the subsequent budget periods. All applications should contain a breakdown by the object class categories shown in Lines a-k of Section B.

Section A. Budget Summary Lines 1-4 Columns (a) and (b)

For applications pertaining to a *single* Federal grant program (Federal Domestic Assistance Catalog number) and *not requiring* a functional or activity breakdown, enter on Line 1 under Column (a) the Catalog program title and the Catalog number in Column (b).

For applications pertaining to a *single* program *requiring* budget amounts by multiple functions or activities, enter the name of each activity or function on each line in Column (a), and enter the Catalog number in Column (b). For applications pertaining to multiple programs where none of the programs require a breakdown by function or activity, enter the Catalog program title on each line in *Column* (a) and the respective Catalog number on each line in Column (b).

For applications pertaining to *multiple* programs where one or more programs *require* a breakdown by function or activity, prepare a separate sheet for each program requiring the breakdown. Additional sheets should be used when one form does not provide adequate space for all breakdown of data required. However, when more than one sheet is used, the first page should provide the summary totals by programs.

Lines 1-4, Columns (c) through (g)

For new applications, leave Column (c) and (d) blank. For each line entry in Columns (a) and (b), enter in Columns (e), (f), and (g) the appropriate amounts of funds needed to support the project for the first funding period (usually a year).

For continuing grant program applications, submit these forms before the end of each funding period as required by the grantor agency. Enter in Columns (c) and (d) the estimated amounts of funds which will remain unobligated at the end of the grant funding period only if the Federal grantor agency instructions provide for this. Otherwise, leave these columns blank. Enter in columns (e) and (f) the amounts of funds needed for the upcoming period. The amount(s) in Column (g) should be the sum of amounts in Columns (e) and (f).

For supplemental grants and changes to existing grants, do not use Columns (c) and (d). Enter in Column (e) the amount of the increase or decrease of Federal funds and enter in Column (f) the amount of the increase or decrease of non-Federal funds. In Column (g) enter the new total budgeted amount (Federal and non-Federal) which includes the total previous authorized budgeted amounts plus or minus, as appropriate, the amounts shown in Columns (e) and (f). The amount(s) in Column (g) should not equal the sum of amounts in Columns (e) and (f).

Line 5 - Show the totals for all columns used.

Section B Budget Categories

In the column headings (1) through (4), enter the titles of the same programs, functions, and activities shown on Lines 1-4, Column (a), Section A. When additional sheets are prepared for Section A, provide similar column headings on each sheet. For each program, function or activity, fill in the total requirements for funds (both Federal and non-Federal) by object class categories.

Line 6a-i - Show the totals of Lines 6a to 6h in each column.

Line 6j - Show the amount of indirect cost.

Line 6k - Enter the total of amounts on Lines 6i and 6j. For all applications for new grants and continuation grants the total amount in column (5), Line 6k, should be the same as the total amount shown in Section A, Column (g), Line 5. For supplemental grants and changes to grants, the total amount of the increase or decrease as shown in Columns (1)-(4), Line 6k should be the same as the sum of the amounts in Section A, Columns (e) and (f) on Line 5.

Line 7 - Enter the estimated amount of income, if any, expected to be generated from this project. Do not add or subtract this amount from the total project amount, Show under the program

INSTRUCTIONS FOR THE SF-424A (continued)

narrative statement the nature and source of income. The estimated amount of program income may be considered by the Federal grantor agency in determining the total amount of the grant.

Section C. Non-Federal Resources

Lines 8-11 Enter amounts of non-Federal resources that will be used on the grant. If in-kind contributions are included, provide a brief explanation on a separate sheet.

Column (a) - Enter the program titles identical to Column (a), Section A. A breakdown by function or activity is not necessary.

Column (b) - Enter the contribution to be made by the applicant.

Column (c) - Enter the amount of the State's cash and in-kind contribution if the applicant is not a State or State agency. Applicants which are a State or State agencies should leave this column blank.

Column (d) - Enter the amount of cash and in-kind contributions to be made from all other sources.

Column (e) - Enter totals of Columns (b), (c), and (d).

Line 12 - Enter the total for each of Columns (b)-(e). The amount in Column (e) should be equal to the amount on Line 5, Column (f), Section A.

Section D. Forecasted Cash Needs

Line 13 - Enter the amount of cash needed by quarter from the grantor agency during the first year.

Line 14 - Enter the amount of cash from all other sources needed by quarter during the first year.

Line 15 - Enter the totals of amounts on Lines 13 and 14.

Section E. Budget Estimates of Federal Funds Needed for Balance of the Project

Lines 16-19 - Enter in Column (a) the same grant program titles shown in Column (a), Section A. A breakdown by function or activity is not necessary. For new applications and continuation grant applications, enter in the proper columns amounts of Federal funds which will be needed to complete the program or project over the succeeding funding periods (usually in years). This section need not be completed for revisions (amendments, changes, or supplements) to funds for the current year of existing grants.

If more than four lines are needed to list the program titles, submit additional schedules as necessary.

Line 20 - Enter the total for each of the Columns (b)-(e). When additional schedules are prepared for this Section, annotate accordingly and show the overall totals on this line.

Section F. Other Budget Information

Line 21 - Use this space to explain amounts for individual direct object class cost categories that may appear to be out of the ordinary or to explain the details as required by the Federal grantor agency.

Line 22 - Enter the type of indirect rate (provisional, predetermined, final or fixed) that will be in effect during the funding period, the estimated amount of the base to which the rate is applied, and the total indirect expense.

Line 23 - Provide any other explanations or comments deemed necessary.

SURVEY ON ENSURING EQUAL OPPORTUNITY FOR APPLICANTS

OMB No. 1890-0014 Exp. 1/31/2006

Purpose: The Federal government is committed to ensuring that all qualified applicants, small or large, non-religious or faith-based, have an equal opportunity to compete for Federal funding. In order for us to better understand the population of applicants for Federal funds, we are asking nonprofit private organizations (not including private universities) to fill out this survey.

Upon receipt, the survey will be separated from the application. Information provided on the survey will not be considered in any way in making funding decisions and will not be included in the Federal grants database. While your help in this data collection process is greatly appreciated, completion of this survey is voluntary.

Instructions for Submitting the Survey: If you are applying using a hard copy application, please place the completed survey in an envelope labeled "Applicant Survey." Seal the envelope and include it along with your application package. If you are applying electronically, please submit this survey along with your application.

Applicant's (Organization) Name: _____

Applicant's DUNS Number: _____

Grant Name: _____ **CFDA Number:** _____

1. Does the applicant have 501(c)(3) status?

   ☐ Yes ☐ No

2. How many full-time equivalent employees does the applicant have? *(Check only one box).*

   ☐ 3 or Fewer ☐ 15-50
   ☐ 4-5 ☐ 51-100
   ☐ 6-14 ☐ over 100

3. What is the size of the applicant's annual budget? *(Check only one box.)*

   ☐ Less Than $150,000
   ☐ $150,000 - $299,999
   ☐ $300,000 - $499,999
   ☐ $500,000 - $999,999
   ☐ $1,000,000 - $4,999,999
   ☐ $5,000,000 or more

4. Is the applicant a faith-based/religious organization?

   ☐ Yes ☐ No

5. Is the applicant a non-religious community-based organization?

   ☐ Yes ☐ No

6. Is the applicant an intermediary that will manage the grant on behalf of other organizations?

   ☐ Yes ☐ No

7. Has the applicant ever received a government grant or contract (Federal, State, or local)?

   ☐ Yes ☐ No

8. Is the applicant a local affiliate of a national organization?

   ☐ Yes ☐ No

Survey Instructions on Ensuring Equal Opportunity for Applicants

Provide the applicant's (organization) name and DUNS number and the grant name and CFDA number.

1. 501(c)(3) status is a legal designation provided on application to the Internal Revenue Service by eligible organizations. Some grant programs may require nonprofit applicants to have 501(c)(3) status. Other grant programs do not.

2. For example, two part-time employees who each work half-time equal one full-time equivalent employee. If the applicant is a local affiliate of a national organization, the responses to survey questions 2 and 3 should reflect the staff and budget size of the local affiliate.

3. Annual budget means the amount of money your organization spends each year on all of its activities.

4. Self-identify.

5. An organization is considered a community-based organization if its headquarters/service location shares the same zip code as the clients you serve.

6. An "intermediary" is an organization that enables a group of small organizations to receive and manage government funds by administering the grant on their behalf.

7. Self-explanatory.

8. Self-explanatory.

Paperwork Burden Statement

According to the Paperwork Reduction Act of 1995, no persons are required to respond to a collection of information unless such collection displays a valid OMB control number. The valid OMB control number for this information collection is 1890-0014. The time required to complete this information collection is estimated to average five (5) minutes per response, including the time to review instructions, search existing data resources, gather the data needed, and complete and review the information collection. **If you have any comments concerning the accuracy of the time estimate(s) or suggestions for improving this form, please write to:** U.S. Department of Education, Washington, D.C. 2202-4651.

If you have comments or concerns regarding the status of your individual submission of this form, write directly to: Joyce I. Mays, Application Control Center, U.S. Department of Education, 7th and D Streets, SW, ROB-3, Room 3671, Washington, D.C. 20202-4725

OMB No. 1890-0014 Exp. 1/31/2006

[FR Doc. 05–8367 Filed 4–25–05; 8:45 am]
BILLING CODE 4510–30–C

Federal Register

Tuesday,
April 26, 2005

Part VI

The President

Order of April 21, 2005—Designation Under Executive Order 12958

Presidential Determination No. 2005–22 of April 14, 2005—Waiver and Certification Regarding the Palestine Liberation Organization

Federal Register
Vol. 70, No. 79
Tuesday, April 26, 2005

Presidential Documents

Order of April 21, 2005

Designation Under Executive Order 12958

Consistent with the provisions of section 1.3 of Executive Order 12958 of April 17, 1995, as amended, entitled ''Classified National Security Information,'' I hereby designate the following officers to classify information originally as ''Top Secret:''

Director of National Intelligence; and

Director of the Central Intelligence Agency.

Any delegation of this authority shall be in accordance with section 1.3(c) of Executive Order 12958, as amended.

This order shall be published in the **Federal Register**.

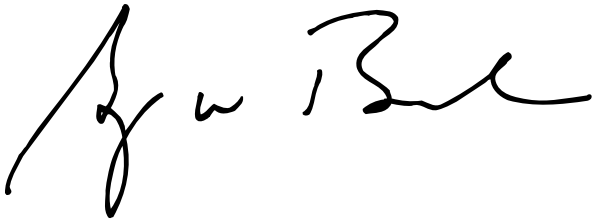

THE WHITE HOUSE,
April 21, 2005.

[FR Doc. 05–8485
Filed 4–25–05; 8:45 am]
Billing code 3195–01–P

Presidential Documents

Presidential Determination No. 2005–22 of April 14, 2005

Waiver and Certification of Statutory Provisions Regarding the Palestine Liberation Organization

Memorandum for the Secretary of State

Pursuant to the authority and conditions contained in section 534(d) of the Foreign Operations, Export Financing, and Related Programs Appropriations Act, 2005, Public Law 108–447, I hereby determine and certify that it is important to the national security interests of the United States to waive the provisions of section 1003 of the Anti-Terrorism Act of 1987, Public Law 100–204.

This waiver shall be effective for a period of 6 months from the date hereof. You are hereby authorized and directed to transmit this determination to the Congress and to publish it in the **Federal Register.**

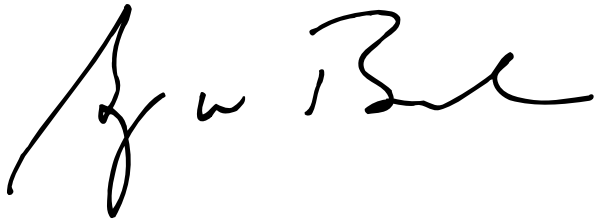

THE WHITE HOUSE,
Washington, April 14, 2005.

[FR Doc. 05–8486
Filed 4–25–05; 8:45 am]
Billing code 4710–10–P

Reader Aids

Federal Register

Vol. 70, No. 79

Tuesday, April 26, 2005

CUSTOMER SERVICE AND INFORMATION

Federal Register/Code of Federal Regulations	
General Information, indexes and other finding aids	**202–741–6000**
Laws	**741–6000**
Presidential Documents	
Executive orders and proclamations	**741–6000**
The United States Government Manual	**741–6000**
Other Services	
Electronic and on-line services (voice)	**741–6020**
Privacy Act Compilation	**741–6064**
Public Laws Update Service (numbers, dates, etc.)	**741–6043**
TTY for the deaf-and-hard-of-hearing	**741–6086**

ELECTRONIC RESEARCH
World Wide Web

Full text of the daily Federal Register, CFR and other publications is located at: **http://www.gpoaccess.gov/nara/index.html**

Federal Register information and research tools, including Public Inspection List, indexes, and links to GPO Access are located at: **http://www.archives.gov/federal__register/**

E-mail

FEDREGTOC-L (Federal Register Table of Contents LISTSERV) is an open e-mail service that provides subscribers with a digital form of the Federal Register Table of Contents. The digital form of the Federal Register Table of Contents includes HTML and PDF links to the full text of each document.

To join or leave, go to **http://listserv.access.gpo.gov** and select *Online mailing list archives, FEDREGTOC-L, Join or leave the list (or change settings);* then follow the instructions.

PENS (Public Law Electronic Notification Service) is an e-mail service that notifies subscribers of recently enacted laws.

To subscribe, go to **http://listserv.gsa.gov/archives/publaws-l.html** and select *Join or leave the list (or change settings);* then follow the instructions.

FEDREGTOC-L and **PENS** are mailing lists only. We cannot respond to specific inquiries.

Reference questions. Send questions and comments about the Federal Register system to: **fedreg.info@nara.gov**

The Federal Register staff cannot interpret specific documents or regulations.

FEDERAL REGISTER PAGES AND DATE, APRIL

16691–16920 1
16921–17196 4
17197–17300 5
17301–17582 6
17583–17886 7
17887–18262 8
18263–18960 11
18961–19252 12
19253–19678 13
19679–19876 14
19877–20044 15
20045–20270 18
20271–20454 19
20455–20690 20
20691–20806 21
20807–21128 22
21129–21324 25
21325–21612 26

CFR PARTS AFFECTED DURING APRIL

At the end of each month, the Office of the Federal Register publishes separately a List of CFR Sections Affected (LSA), which lists parts and sections affected by documents published since the revision date of each title.

3 CFR

Proclamations:
7877 17197
7878 17293
7879 17295
7880 17297
7881 17301
7882 17883
7883 17885
7884 17887
7885 20265
7886 20269
7887 20455
7888 20691
7889 21127

Administrative Orders:
Memorandums:
Memorandums of March 31, 2005 17195
Order of April 21, 2005 21609
Presidential Determination No. 2005-22 of April 14, 2005 21611

Executive Orders:
11767 (Revoked by EO 13377) 20263
12863 (Amended by EO 13376) 20261
13070 (See EO 13376) 20261
13295 (Amended by EO 13375) 17299
13301 (See EO 13376) 20261
13375 17299
13376 20261
13377 20263

4 CFR

Ch. I 17583
21 19679

5 CFR

310 20457

Proposed Rules:
337 17610
1600 21290
1601 21290
1604 21290
1605 21290
1606 21290
1620 21290
1640 21290
1645 21290
1650 21290
1651 21290
1653 21290
1655 21290
1690 21290

6 CFR

Proposed Rules:
5 20061

7 CFR

54 17611
62 17611
272 18263
274 18263
301 .....20271, 21325, 21326
354 16691
624 16921
723 17150
945 21328
955 20693
982 20695
1001 18961
1124 18963
1463 17150
1464 17150
1700 17199
1709 17199
1728 20698
1738 16930
1942 19253
1955 20703
4279 17616

Proposed Rules:
28 21342
29 20724
946 16759
1000 19012
1001 19012
1005 19012
1006 19012
1007 19012
1030 .....19012, 19709
1032 19012
1033 19012
1124 .....19012, 19636
1126 19012
1131 .....19012, 19636
1738 16967

8 CFR

204 21129
217 17820
231 17820
251 17820

9 CFR

77 19877
93 18252
94 18252
95 18252
97 16691
98 18252

Proposed Rules:
93 17928
94 17928
98 17928

10 CFR

2.....20457

Proposed Rules:

52.....20062

11 CFR

Proposed Rules:

100.....16967
109.....21163
110.....16967
114.....16967, 21163
300.....21163

12 CFR

225.....20704
229.....21132
303.....17550
325.....17550
327.....17550
347.....17550, 20704
617.....18965
1710.....17303

Proposed Rules:

723.....20487

13 CFR

134.....17583
140.....17583

14 CFR

23 .....19254, 19257, 20706
25.....18271
39 .....17199, 17312, 17315, 17590, 17591, 17594, 17596, 17598, 17600, 17603, 17604, 17606, 17889, 18274, 18275, 18277, 18282, 18285, 18287, 18290, 18463, 19259, 19681, 19682, 19685, 20045, 20271, 20273, 20275, 20276, 20708, 20710, 20713, 20715, 21134, 21136, 21137, 21139, 21141
71 .....16931, 16932, 18294, 18295, 18296, 18297, 18968, 20046, 20047, 21144
95.....18299
97.....17318, 19878

Proposed Rules:

23.....21562
25 .....18321, 19015, 21343, 21562
39 .....16761, 16764, 16767, 16769, 16771, 16979, 16981, 16984, 16986, 17212, 17216, 17340, 17342, 17345, 17347, 17349, 17351, 17353, 17354, 17357, 17359, 17361, 17366, 17368, 17370, 17373, 17375, 17377, 17618, 17620, 17621, 18322, 18324, 18327, 18332, 19340, 19342, 19345, 19718, 19893, 20080, 20083, 20724, 20842, 20844, 21344, 21346
71 .....18335, 18337, 19027, 20085, 20087, 20088, 20090, 20091, 20092, 20093, 20095, 20096
121.....21562
129.....21562
241.....20098
249.....20098
256.....16990
382.....20640
413.....19720
415.....19720
417.....19720

15 CFR

742.....19688, 20805
744.....19688, 20805
774.....19688, 20805

16 CFR

312.....21104

Proposed Rules:

310.....20848
312.....21107
410.....17623
Ch. II.....18338
1214.....18339

17 CFR

210.....20717
211.....16693
228.....20717
231.....19672
241.....19672
249.....20674
271.....19672
275.....20424

Proposed Rules:

240.....21306

18 CFR

385.....21330
390.....21330

Proposed Rules:

35.....21349
45.....17219

19 CFR

4.....17820
122.....17820
178.....17820

20 CFR

Proposed Rules:

404 .....19351, 19353, 19356, 19358, 19361
416 .....19351, 19353, 19356, 19358, 19361
655.....16774

21 CFR

2.....17168
510.....17319
520 .....16933, 17319, 19261
522.....16933
526.....20048
558.....16933
1305.....16902
1308.....16935
1311.....16902

Proposed Rules:

Ch. I.....20882
101 .....16995, 17008, 17010

22 CFR

10.....16937

23 CFR

772.....16707

Proposed Rules:

650.....18342

24 CFR

30.....21572
200.....19660
203.....19666, 21572

Proposed Rules:

990.....19858
3280.....21498
3285.....21498

26 CFR

1 .....18301, 18920, 20049, 20315
31.....19694
48.....21332
54.....21146
301 .....16711, 18920, 19697
602.....18920, 21332

Proposed Rules:

1.....20099, 20325
31 .....19028, 19721, 21163
48.....21361
301.....19722, 20099

27 CFR

17.....19880
19.....19880
24.....19880
25.....19880
26.....19880
27.....19880
31.....19880
45.....19888
70.....19880
194.....19880

Proposed Rules:

1.....18949
9.....17940
301.....18949
479.....17624

28 CFR

2.....19262

29 CFR

1910.....20807
1981.....17889
2590.....21146
4022.....19890
4044.....19890

30 CFR

936.....16941
946.....19698
950.....16945

Proposed Rules:

701.....17626
774.....17626
913.....17014

31 CFR

10 .....19559, 19892, 20805
351.....17288
542.....17201

Proposed Rules:

29.....19366
103.....21362, 21369

32 CFR

199.....19263
527.....18301
634.....18969

Proposed Rules:

43.....20316
50.....20316

33 CFR

100.....20049, 21335
110.....17898, 20638
117 .....18301, 18989, 20051, 20464, 20466, 20467, 20469
162.....20471
165 .....17608, 18302, 18305, 20473, 20809, 20811, 20813

Proposed Rules:

100.....16781, 21376
117 .....19029, 20322, 20489, 20490
147.....21378
165 .....17627, 18343, 20493

34 CFR

Proposed Rules:

Ch. I.....16784

36 CFR

7.....16712
1270.....16717

Proposed Rules:

401.....20324
402.....20324
403.....20324

37 CFR

258.....17320

Proposed Rules:

1.....17629
2.....17636
3.....17629
7.....17636
10.....17629

39 CFR

211.....20291
601.....20291

40 CFR

9.....18074
49.....18074
52 .....16717, 16955, 16958, 17321, 18308, 18991, 18993, 18995, 19000, 19702, 20473, 20816, 21147, 21151, 21337, 21496
55.....20053
63.....19266, 19895
81.....19844
82.....19273
174.....17323
180 .....17901, 17908, 19278, 19283, 20477, 20821
261.....21153
271.....17286
300.....20058, 20719

Proposed Rules:

51.....17018
52 .....16784, 17027, 17028, 17029, 17640, 18346, 19030, 19031, 19035, 19723, 19895, 20495, 21164, 21380, 21384, 21387
63.....19369, 21094
70.....19914
71.....19914
81.....19895, 20495
82.....19371
122.....18347
152.....16785
158.....16785
180.....20036
261.....21165
300 .....18347, 19915, 20099

42 CFR

403.....16720
405.....16720
410.....16720

411 16720
412 16724
413 16724
414 16720
418 16720
424 16720
484 16720
486 16720

43 CFR

2800 20970
2810 20970
2880 20970
2920 20970
9230 20970
9260 20970

44 CFR

64 ....16964, 20299, 21159
65 ....16730, 16733
67 ....16736, 16738
Proposed Rules:
67 ....16786, 16789, 17037, 20326, 20327

45 CFR

146 21146
Proposed Rules:
160 20224
164 20224

46 CFR

115 20302
501 20302
535 20302
Proposed Rules:
67 19376
221 19376

47 CFR

1 19293
2 17327
11 19312
15 17328
22 ....17327, 19293, 19315
24 17327
25 ....19316, 20479
52 19321
64 ....17330, 17334, 19330
73 ....17334, 19337
74 17327
78 17327
80 19315
87 19315
90 ....17327, 19293, 19315
101 19315
Proposed Rules:
1 19377
25 20508
69 19381
73 ....17042, 17043, 17044, 17045, 17046, 17047, 17048, 17049, 17381, 17382, 17383, 17384, 19396, 19397, 19398, 19399, 19400, 19401, 19402, 19403, 19404, 19405, 19406, 19407, 19408

48 CFR

Ch. 1 ....18954, 18959
8 18954
25 18954
39 18958
52 18959
202 20831
204 20831
211 20831
212 20831
225 20838
237 19003
243 20831
252 ....20831, 20838
Proposed Rules:
2 17945
7 17945
34 17945
36 20329
42 17945
52 17945
204 ....19036, 19037
205 19038
211 ....19039, 20726
212 20726
213 ....19041, 19042
223 19039
226 19038
242 19043
244 19044
252 ....19038, 19039, 19043, 19044, 20726
253 19042
538 19045
546 19051
552 ....19042, 19051

49 CFR

171 20018
174 20018
219 16966
541 20481
571 18136
573 16742
575 20720
585 18136
1002 17335
Proposed Rules:
172 17385
225 20333
230 20333

50 CFR

13 18311
17 ....17864, 17916, 18220, 19154, 19562
20 17574
21 18311
92 18244
216 19004
223 ....17211, 17386
229 20484
300 ....16742, 19004, 20304
622 ....16754, 17401
648 ....16758, 21162, 21340
660 20304
679 ....16742, 19338, 19708, 20840, 21341
Proposed Rules:
17 20512
223 17223
224 17223
600 17949
622 21170
648 19724
679 19409

REMINDERS

The items in this list were editorially compiled as an aid to Federal Register users. Inclusion or exclusion from this list has no legal significance.

RULES GOING INTO EFFECT APRIL 26, 2005

AGRICULTURE DEPARTMENT

Animal and Plant Health Inspection Service

Plant-related quarantine, domestic:

West Indian fruit fly; published 4-26-05

ENERGY DEPARTMENT

Federal Energy Regulatory Commission

Practice and procedure:

Commission issuances and proceedings; electronic notification and services; published 4-26-05

ENVIRONMENTAL PROTECTION AGENCY

Air programs; approval and promulgation; State plans for designated facilities and pollutants:

Connecticut; published 2-25-05

NUCLEAR REGULATORY COMMISSION

Production and utilization facilities; domestic licensing:

Emergency planning and preparedness; published 1-26-05

TRANSPORTATION DEPARTMENT

Federal Aviation Administration

Airworthiness directives:

Boeing; published 4-11-05

Dassault; published 4-11-05

COMMENTS DUE NEXT WEEK

AGENCY FOR INTERNATIONAL DEVELOPMENT

Personnel:

Employee responsibilities and conduct; CFR part removed; comments due by 5-4-05; published 4-4-05 [FR 05-06383]

AGRICULTURE DEPARTMENT

Agricultural Marketing Service

Cotton classing, testing and standards:

Classification services to growers; 2004 user fees; Open for comments until further notice; published 5-28-04 [FR 04-12138]

Irish potatoes grown in—

Washington; comments due by 5-2-05; published 4-1-05 [FR 05-06417]

AGRICULTURE DEPARTMENT

Animal and Plant Health Inspection Service

Plant-related quarantine, domestic:

Emerald ash borer; comments due by 5-2-05; published 3-3-05 [FR 05-04095]

Oriental fruit fly; comments due by 5-6-05; published 3-7-05 [FR 05-04376]

AGRICULTURE DEPARTMENT

Rural Utilities Service

Rural Broadband Access Loans and Loan Guarantees; comments due by 5-4-05; published 4-4-05 [FR 05-06537]

COMMERCE DEPARTMENT

Industry and Security Bureau

Export administration regulations:

Russia; Tula Instrument Design Bureau; licensing requirements; comments due by 5-6-05; published 3-7-05 [FR 05-04325]

COMMERCE DEPARTMENT

National Oceanic and Atmospheric Administration

Fishery conservation and management:

Caribbean, Gulf, and South Atlantic fisheries—

King mackerel; comments due by 5-2-05; published 3-18-05 [FR 05-05351]

King mackerel; comments due by 5-6-05; published 3-7-05 [FR 05-04377]

South Atlantic shrimp; comments due by 5-6-05; published 3-7-05 [FR 05-04375]

COURT SERVICES AND OFFENDER SUPERVISION AGENCY FOR THE DISTRICT OF COLUMBIA

Semi-annual agenda; Open for comments until further notice; published 12-22-03 [FR 03-25121]

DEFENSE DEPARTMENT

Acquisition regulations:

Pilot Mentor-Protege Program; Open for comments until further notice; published 12-15-04 [FR 04-27351]

EDUCATION DEPARTMENT

Grants and cooperative agreements; availability, etc.:

Vocational and adult education—

Smaller Learning Communities Program; Open for comments until further notice; published 2-25-05 [FR E5-00767]

ENERGY DEPARTMENT

Meetings:

Environmental Management Site-Specific Advisory Board—

Oak Ridge Reservation, TN; Open for comments until further notice; published 11-19-04 [FR 04-25693]

ENERGY DEPARTMENT

Energy Efficiency and Renewable Energy Office

Commercial and industrial equipment; energy efficiency program:

Test procedures and efficiency standards—

Commercial packaged boilers; Open for comments until further notice; published 10-21-04 [FR 04-17730]

ENERGY DEPARTMENT

Federal Energy Regulatory Commission

Electric rate and corporate regulation filings:

Virginia Electric & Power Co. et al.; Open for comments until further notice; published 10-1-03 [FR 03-24818]

ENVIRONMENTAL PROTECTION AGENCY

Air programs:

Ambient air quality standards, national—

8-hour ozone standard; Phase 1 implementation; comments due by 5-4-05; published 4-4-05 [FR 05-06630]

Air quality implementation plans; approval and promulgation; various States:

Kentucky; comments due by 5-4-05; published 4-4-05 [FR 05-06631]

Missouri; comments due by 5-2-05; published 3-31-05 [FR 05-06370]

Nebraska; comments due by 5-2-05; published 3-31-05 [FR 05-06368]

Pennsylvania; comments due by 5-2-05; published 3-31-05 [FR 05-06371]

Washington, DC, Baltimore, MD, and Philadelphia metropolitan areas; comments due by 5-4-05; published 4-4-05 [FR 05-06502]

Environmental statements; availability, etc.:

Coastal nonpoint pollution control program—

Minnesota and Texas; Open for comments until further notice; published 10-16-03 [FR 03-26087]

Toxic substances:

Dioxin and Dioxin-like compounds; chemical release reporting; comments due by 5-6-05; published 3-7-05 [FR 05-04339]

Significant new uses—

2-ethoxyethanol, etc.; comments due by 5-2-05; published 3-1-05 [FR 05-03911]

Water pollution control:

National Pollutant Discharge Elimination System—

Concentrated animal feeding operations in New Mexico and Oklahoma; general permit for discharges; Open for comments until further notice; published 12-7-04 [FR 04-26817]

Water pollution; effluent guidelines for point source categories:

Meat and poultry products processing facilities; Open for comments until further notice; published 9-8-04 [FR 04-12017]

FEDERAL COMMUNICATIONS COMMISSION

Committees; establishment, renewal, termination, etc.:

Technological Advisory Council; Open for comments until further notice; published 3-18-05 [FR 05-05403]

Common carrier services:

Interconnection—

Incumbent local exchange carriers unbounding obligations; local competition provisions; wireline services offering advanced telecommunications capability; Open for comments until further notice; published 12-29-04 [FR 04-28531]

Practice and procedure:
Air-ground telecommunications services; comments due by 5-3-05; published 4-13-05 [FR 05-06950]
Radio stations; table of assignments:
Arkansas and Missouri; comments due by 5-5-05; published 3-24-05 [FR 05-05855]
Colorado; comments due by 5-5-05; published 3-24-05 [FR 05-05844]
Louisiana and Texas; comments due by 5-5-05; published 3-24-05 [FR 05-05852]
Texas; comments due by 5-5-05; published 3-24-05 [FR 05-05849]
Texas and Wyoming; comments due by 5-5-05; published 3-24-05 [FR 05-05850]
Wyoming; comments due by 5-5-05; published 3-24-05 [FR 05-05848]

FEDERAL DEPOSIT INSURANCE CORPORATION
Economic Growth and Regulatory Paperwork Reduction Act:
Money laundering, safety and soundness, and securities; burden reduction recommendations; comment request; comments due by 5-4-05; published 2-3-05 [FR 05-02079]

FEDERAL RESERVE SYSTEM
Collection and availability of checks and other items by Federal Reserve banks and funds transfers through Fedwire (Regulations J and CC):
Remotely created checks; definition and presentment warranties transfer and creation; comments due by 5-3-05; published 3-4-05 [FR 05-04128]
Economic Growth and Regulatory Paperwork Reduction Act:
Money laundering, safety and soundness, and securities; burden reduction recommendations; comment request; comments due by 5-4-05; published 2-3-05 [FR 05-02079]

HEALTH AND HUMAN SERVICES DEPARTMENT
Centers for Medicare & Medicaid Services
Medicare:
End stage renal disease facilities; conditions for coverage; comments due by 5-5-05; published 2-4-05 [FR 05-01622]

HEALTH AND HUMAN SERVICES DEPARTMENT
Food and Drug Administration
Reports and guidance documents; availability, etc.:
Evaluating safety of antimicrobial new animal drugs with regard to their microbiological effects on bacteria of human health concern; Open for comments until further notice; published 10-27-03 [FR 03-27113]
Medical devices—
Dental noble metal alloys and base metal alloys; Class II special controls; Open for comments until further notice; published 8-23-04 [FR 04-19179]

HOMELAND SECURITY DEPARTMENT
Coast Guard
Anchorage regualtions:
Washington; comments due by 5-2-05; published 3-1-05 [FR 05-03918]
Anchorage regulations:
Maryland; Open for comments until further notice; published 1-14-04 [FR 04-00749]
Drawbridge operations:
Alabama; comments due by 5-2-05; published 3-1-05 [FR 05-03919]
Florida; comments due by 5-2-05; published 3-3-05 [FR 05-04129]
Ports and waterways safety:
Fifth Coast Guard District; safety zone; comments due by 5-2-05; published 3-31-05 [FR 05-06140]
Regattas and marine parades:
Fort Myers Beach Air Show; comments due by 5-2-05; published 4-1-05 [FR 05-06477]

INTERIOR DEPARTMENT
Fish and Wildlife Service
Endangered and threatened species permit applications
Recovery plans—
Paiute cutthroat trout; Open for comments until further notice; published 9-10-04 [FR 04-20517]
Endangered and threatened species:
Findings on petitions, etc.—
Preble's meadow jumping mouse; comments due by 5-3-05; published 2-2-05 [FR 05-02020]
Migratory bird hunting:
Alaska; spring/summer subsistence harvest regulations; comments due by 5-1-05; published 4-6-05 [FR 05-06816]

INTERIOR DEPARTMENT
Surface Mining Reclamation and Enforcement Office
Permanent program and abandoned mine land reclamation plan submissions:
Illinois; comments due by 5-4-05; published 4-4-05 [FR 05-06601]

JUSTICE DEPARTMENT
Drug Enforcement Administration
Schedules of controlled substances:
Sodium permanganate; control as List II chemical; comments due by 5-2-05; published 3-1-05 [FR 05-03913]

JUSTICE DEPARTMENT
Executive Office for Immigration Review
Background and security investigations in proceedings before immigration judges and Immigration Appeals Board; comments due by 5-2-05; published 3-31-05 [FR 05-06428]

LABOR DEPARTMENT
Employment and Training Administration
Aliens; temporary employment in U.S.:
Nonimmigrants on H-1B visas in specialty occupations and as fashion models; labor condition applications and requirements; filing procedures; comments due by 5-2-05; published 4-1-05 [FR 05-06454]

NATIONAL CREDIT UNION ADMINISTRATION
Credit unions:
Economic Growth and Regulatory Paperwork Reduction Act of 1996; implementation—
Safety and soundness and anti-money laundering; burden reduction recommendations; comment request; comments due by 5-5-05; published 2-4-05 [FR 05-02205]

NUCLEAR REGULATORY COMMISSION
Environmental statements; availability, etc.:
Fort Wayne State Developmental Center; Open for comments until further notice; published 5-10-04 [FR 04-10516]

SMALL BUSINESS ADMINISTRATION
Disaster loan areas:
Maine; Open for comments until further notice; published 2-17-04 [FR 04-03374]

SOCIAL SECURITY ADMINISTRATION
Social security benefits:
Medicare subsidies; Medicare Part D Program; comments due by 5-3-05; published 3-4-05 [FR 05-04097]

STATE DEPARTMENT
Personnel:
Employee responsibilities and conduct; CFR part removed; comments due by 5-4-05; published 4-4-05 [FR 05-06383]

OFFICE OF UNITED STATES TRADE REPRESENTATIVE
Trade Representative, Office of United States
Generalized System of Preferences:
2003 Annual Product Review, 2002 Annual Country Practices Review, and previously deferred product decisions; petitions disposition; Open for comments until further notice; published 7-6-04 [FR 04-15361]

TRANSPORTATION DEPARTMENT
Computer reservations systems, carrier-owned; joint operations display; comments due by 5-4-05; published 4-4-05 [FR 05-06650]

TRANSPORTATION DEPARTMENT
Federal Aviation Administration
Airworthiness directives:
Air Tractor, Inc.; comments due by 5-6-05; published 3-4-05 [FR 05-04238]
Airbus; comments due by 5-4-05; published 4-4-05 [FR 05-06578]
BAE Systems (Operations) Ltd.; comments due by 5-6-05; published 4-6-05 [FR 05-06772]
Boeing; comments due by 5-2-05; published 3-16-05 [FR 05-05137]
Bombardier; comments due by 5-6-05; published 4-6-05 [FR 05-06764]

Dassault; comments due by 5-2-05; published 3-1-05 [FR 05-03559]

Dornier; comments due by 5-6-05; published 4-6-05 [FR 05-06761]

Empresa Brasileira de Aeronautica S.A. (EMBRAER); comments due by 5-2-05; published 3-31-05 [FR 05-06348]

Extra Flugzeugproduktions- und Vertriebs- GmbH; comments due by 5-3-05; published 4-1-05 [FR 05-06443]

Fokker; comments due by 5-6-05; published 4-6-05 [FR 05-06760]

Goodrich De-icing and Specialty Systems; comments due by 5-6-05; published 4-6-05 [FR 05-06776]

GROB-WERKE; comments due by 5-3-05; published 4-1-05 [FR 05-06444]

McDonnell Douglas; comments due by 5-6-05; published 3-22-05 [FR 05-05574]

Class E airspace; comments due by 5-2-05; published 3-23-05 [FR 05-05763]

Commercial space transportation:

Licensing and safety requirements for launch; meeting; comments due by 5-2-05; published 3-1-05 [FR 05-03916]

TRANSPORTATION DEPARTMENT

National Highway Traffic Safety Administration

Motor vehicle theft prevention standard:

Passenger motor vehicle theft data (2003 CY); comments due by 5-2-05; published 3-2-05 [FR 05-03987]

TRANSPORTATION DEPARTMENT

Research and Special Programs Administration

Pipeline safety:

Operator qualifications; comments due by 5-2-05; published 3-3-05 [FR 05-04122]

TREASURY DEPARTMENT

Comptroller of the Currency

Economic Growth and Regulatory Paperwork Reduction Act:

Money laundering, safety and soundness, and securities; burden reduction recommendations; comment request; comments due by 5-4-05; published 2-3-05 [FR 05-02079]

TREASURY DEPARTMENT

Thrift Supervision Office

Adjudicatory proceedings; practice and procedure:

Holding companies; special rules; comments due by 5-2-05; published 3-2-05 [FR 05-04017]

Economic Growth and Regulatory Paperwork Reduction Act:

Money laundering, safety and soundness, and securities; burden reduction recommendations; comment request; comments due by 5-4-05; published 2-3-05 [FR 05-02079]

LIST OF PUBLIC LAWS

This is a continuing list of public bills from the current session of Congress which have become Federal laws. It may be used in conjunction with "P L U S" (Public Laws Update Service) on 202–741–6043. This list is also available online at *http://www.archives.gov/federal_register/public_laws/public_laws.html*.

The text of laws is not published in the **Federal Register** but may be ordered in "slip law" (individual pamphlet) form from the Superintendent of Documents, U.S. Government Printing Office, Washington, DC 20402 (phone, 202–512–1808). The text will also be made available on the Internet from GPO Access at *http://www.gpoaccess.gov/plaws/index.html*. Some laws may not yet be available.

S. 256/P.L. 109–8

Bankruptcy Abuse Prevention and Consumer Protection Act of 2005 (Apr. 20, 2005; 119 Stat. 23)

Last List April 19, 2005

Public Laws Electronic Notification Service (PENS)

PENS is a free electronic mail notification service of newly enacted public laws. To subscribe, go to *http://listserv.gsa.gov/archives/publaws-l.html*

Note: This service is strictly for E-mail notification of new laws. The text of laws is not available through this service. **PENS** cannot respond to specific inquiries sent to this address.