Federal Register

5–19–05 Thursday
Vol. 70 No. 96 May 19, 2005

Pages 28773–29188

The **FEDERAL REGISTER** (ISSN 0097–6326) is published daily, Monday through Friday, except official holidays, by the Office of the Federal Register, National Archives and Records Administration, Washington, DC 20408, under the Federal Register Act (44 U.S.C. Ch. 15) and the regulations of the Administrative Committee of the Federal Register (1 CFR Ch. I). The Superintendent of Documents, U.S. Government Printing Office, Washington, DC 20402 is the exclusive distributor of the official edition. Periodicals postage is paid at Washington, DC.

The **FEDERAL REGISTER** provides a uniform system for making available to the public regulations and legal notices issued by Federal agencies. These include Presidential proclamations and Executive Orders, Federal agency documents having general applicability and legal effect, documents required to be published by act of Congress, and other Federal agency documents of public interest.

Documents are on file for public inspection in the Office of the Federal Register the day before they are published, unless the issuing agency requests earlier filing. For a list of documents currently on file for public inspection, see *www.archives.gov.*

The seal of the National Archives and Records Administration authenticates the Federal Register as the official serial publication established under the Federal Register Act. Under 44 U.S.C. 1507, the contents of the **Federal Register** shall be judicially noticed.

The **Federal Register** is published in paper and on 24x microfiche. It is also available online at no charge as one of the databases on GPO Access, a service of the U.S. Government Printing Office.

The online edition of the **Federal Register** *www.gpoaccess.gov/nara,* available through GPO Access, is issued under the authority of the Administrative Committee of the Federal Register as the official legal equivalent of the paper and microfiche editions (44 U.S.C. 4101 and 1 CFR 5.10). It is updated by 6 a.m. each day the **Federal Register** is published and includes both text and graphics from Volume 59, Number 1 (January 2, 1994) forward.

For more information about GPO Access, contact the GPO Access User Support Team, call toll free 1-888-293-6498; DC area 202-512-1530; fax at 202-512-1262; or via e-mail at *gpoaccess@gpo.gov.* The Support Team is available between 7:00 a.m. and 9:00 p.m. Eastern Time, Monday–Friday, except official holidays.

The annual subscription price for the **Federal Register** paper edition is $749 plus postage, or $808, plus postage, for a combined **Federal Register, Federal Register** Index and List of CFR Sections Affected (LSA) subscription; the microfiche edition of the **Federal Register** including the **Federal Register** Index and LSA is $165, plus postage. Six month subscriptions are available for one-half the annual rate. The prevailing postal rates will be applied to orders according to the delivery method requested. The price of a single copy of the daily **Federal Register,** including postage, is based on the number of pages: $11 for an issue containing less than 200 pages; $22 for an issue containing 200 to 400 pages; and $33 for an issue containing more than 400 pages. Single issues of the microfiche edition may be purchased for $3 per copy, including postage. Remit check or money order, made payable to the Superintendent of Documents, or charge to your GPO Deposit Account, VISA, MasterCard, American Express, or Discover. Mail to: New Orders, Superintendent of Documents, P.O. Box 371954, Pittsburgh, PA 15250-7954; or call toll free 1-866-512-1800, DC area 202-512-1800; or go to the U.S. Government Online Bookstore site, see *bookstore.gpo.gov.*

There are no restrictions on the republication of material appearing in the **Federal Register.**

How To Cite This Publication: Use the volume number and the page number. Example: 70 FR 12345.

Postmaster: Send address changes to the Superintendent of Documents, Federal Register, U.S. Government Printing Office, Washington DC 20402, along with the entire mailing label from the last issue received.

SUBSCRIPTIONS AND COPIES

PUBLIC

Subscriptions:

Paper or fiche	**202–512–1800**
Assistance with public subscriptions	**202–512–1806**

General online information **202–512–1530; 1–888–293–6498**

Single copies/back copies:

Paper or fiche	**202–512–1800**
Assistance with public single copies	**1–866–512–1800 (Toll-Free)**

FEDERAL AGENCIES

Subscriptions:

Paper or fiche	**202–741–6005**
Assistance with Federal agency subscriptions	**202–741–6005**

FEDERAL REGISTER WORKSHOP

THE FEDERAL REGISTER: WHAT IT IS AND HOW TO USE IT

FOR: Any person who uses the Federal Register and Code of Federal Regulations.

WHO: Sponsored by the Office of the Federal Register.

WHAT: Free public briefings (approximately 3 hours) to present:

1. The regulatory process, with a focus on the Federal Register system and the public's role in the development of regulations.

2. The relationship between the Federal Register and Code of Federal Regulations.

3. The important elements of typical Federal Register documents.

4. An introduction to the finding aids of the FR/CFR system.

WHY: To provide the public with access to information necessary to research Federal agency regulations which directly affect them. There will be no discussion of specific agency regulations.

WHEN: Tuesday, Tuesday, July 19, 2005
9:00 a.m.–Noon

WHERE: Office of the Federal Register
Conference Room, Suite 700
800 North Capitol Street, NW.
Washington, DC 20002

RESERVATIONS: (202) 741–6008

Printed on recycled paper.

Contents

Federal Register

Vol. 70, No. 96

Thursday, May 19, 2005

Agricultural Marketing Service
RULES
Plant Variety Protection Office; fee increase, 28783–28786

Agriculture Department
See Agricultural Marketing Service
See Forest Service
See Rural Utilities Service

Alcohol and Tobacco Tax and Trade Bureau
PROPOSED RULES
Alcohol; viticultural area designations:
Livermore Valley, Alameda County, CA, 28873–28878
San Antonio Valley, Monterey County, CA, 28865–28870
San Francisco Bay and Central Coast, CA, 28870–28873
Wahluke Slope, Grant County, WA, 28861–28865
NOTICES
Agency information collection activities; proposals, submissions, and approvals, 28982–28983

Alcohol, Tobacco, Firearms, and Explosives Bureau
NOTICES
Agency information collection activities; proposals, submissions, and approvals, 28957

Antitrust Modernization Commission
NOTICES
Reports and guidance documents; availability, etc.:
Antitrust laws modernization, 28902–28907

Army Department
See Engineers Corps

Arts and Humanities, National Foundation
See National Foundation on the Arts and the Humanities

Centers for Disease Control and Prevention
NOTICES
Meetings:
Disease, Disability, and Injury Prevention and Control Special Emphasis Panel, 28946

Centers for Medicare & Medicaid Services
PROPOSED RULES
Medicare:
Skilled nursing facilities; prospective payment system and consolidated billing; update, 29070–29162

Coast Guard
RULES
Ports and waterways safety; regulated navigation areas, safety zones, security zones, etc.:
Portland Captain of Port Zone, OR, 28826
NOTICES
Meetings:
Merchant Mariner; identity security and modernization, 28947–28949

Commerce Department
See National Institute of Standards and Technology
See National Oceanic and Atmospheric Administration

Defense Department
See Engineers Corps
NOTICES
Arms sales notification; transmittal letter, etc., 28911–28920
Federal Acquisition Regulation (FAR):
Agency information collection activities; proposals, submissions, and approvals, 28920–28921
Meetings:
National Security Education Board, 28921

Education Department
NOTICES
Agency information collection activities; proposals, submissions, and approvals, 28926–28927

Employment and Training Administration
NOTICES
Adjustment assistance; applications, determinations, etc.:
Acco Chain and Lifting Products, 28959
AVX Corp., 28959
Bic Corp., 28959
Brandon Hosiery, et al., 28959–28961
Cedar Creek Corp., 28961
Citicorp Credit Services, Inc., 28961
Gaylord Inland, 28961
Neat Feet Hosiery, Inc., 28961
Source Electronics Corp., 28961
Stoneridge Control Devices, 28961

Energy Department
See Energy Efficiency and Renewable Energy Office
See Federal Energy Regulatory Commission
NOTICES
Committees; establishment, renewal, termination, etc.:
Basic Energy Sciences Advisory Committee, 28927
Recommendations:
Nuclear material; storage and handling outside engineered contamination barriers; safe packaging criteria, 28927–28930

Energy Efficiency and Renewable Energy Office
NOTICES
Consumer products; energy conservation program:
Fujitsu General Ltd.; waiver from air conditioner and heat pump test procedures, 28930

Engineers Corps
NOTICES
Environmental statements; notice of intent:
Caminada and Shell Island Restoration Feasibility Study, LA, 28921–28923
Kissimmee River Restoration Project, FL, 28923–28924
North Topsail Beach, NC, 28924–28926

Environmental Protection Agency
RULES
Air quality implementation plans; approval and promulgation; various States:
California, 28826–28829
District of Columbia; correction, 28988
PROPOSED RULES
Air quality implementation plans; approval and promulgation; various States:
California, 28878

NOTICES
Agency information collection activities; proposals, submissions, and approvals, 28934–28936

Equal Employment Opportunity Commission
NOTICES
Meetings; Sunshine Act, 28936

Executive Office of the President
See Presidential Documents

Federal Accounting Standards Advisory Board
NOTICES
Meetings:
Federal Accounting Standards Advisory Board, 28936–28937

Federal Aviation Administration
RULES
Airports:
Airport noise compatibility planning, 29066–29067
Air traffic operating and flight rules, etc.:
Ronald Reagan Washington National Airport, VA; commuter aircraft definition, 29062–29063
Airworthiness directives:
Boeing, 28793–28806
General Electric, 28806–28808
Turbomeca, 28791–28793
PROPOSED RULES
Airworthiness directives:
Boeing; correction, 28988
Bombardier; correction, 28988
Cessna Aircraft Co., 28857–28859
Tiger Aircraft, LLC, 28854–28856
Commercial space transportation:
Miscellaneous changes, 29164–29168

Federal Energy Regulatory Commission
NOTICES
Electric rate and corporate regulation filings, 28931–28933

Federal Mine Safety and Health Review Commission
NOTICES
Meetings; Sunshine Act, 28962

Federal Motor Carrier Safety Administration
PROPOSED RULES
Motor carrier safety standards:
Unified Registration System, 28990–29060

Federal Reserve System
NOTICES
Banks and bank holding companies:
Change in bank control, 28937
Formations, acquisitions, and mergers, 28937
Permissible nonbanking activities, 28937

Federal Trade Commission
NOTICES
Agency information collection activities; proposals, submissions, and approvals, 28937–28943
Premerger notification waiting periods; early terminations, 28944–28945

Fish and Wildlife Service
PROPOSED RULES
Endangered and threatened species:
Findings on petitions, etc.—
Mexican bobcat, 28895–28900
NOTICES
Agency information collection activities; proposals, submissions, and approvals, 28950–28951
Endangered and threatened species permit applications, 28951–28952
Environmental statements; availability, etc.:
Driftless Area National Wildlife Refuge, 28952–28953
Wild Bird Conservation Act:
Blue-eyed cockatoo; breeding program, 28953

Food and Drug Administration
NOTICES
Reports and guidance documents; availability, etc.:
Nonclinical Studies for Safety Evaluation of Pharmaceutical Excipients, 28946–28947

Forest Service
NOTICES
Meetings:
Resource Advisory Committees—
Ravalli County, 28901
Resource management plans, etc.:
Clearwater and Nez Perce National Forests, 28901
Kootenai and Idaho Panhandle National Forests, 28901–28902
Western Montana Planning Zone, 28902

General Services Administration
NOTICES
Federal Acquisition Regulation (FAR):
Agency information collection activities; proposals, submissions, and approvals, 28920–28921
Federal Management Regulation:
Web Site location for annual motor vehicle reports, 28945

Health and Human Services Department
See Centers for Disease Control and Prevention
See Centers for Medicare & Medicaid Services
See Food and Drug Administration
NOTICES
Agency information collection activities; proposals, submissions, and approvals, 28946

Homeland Security Department
See Coast Guard

Housing and Urban Development Department
NOTICES
Privacy Act:
Computer matching programs, 28949–28950

Indian Affairs Bureau
PROPOSED RULES
Indian tribes, acknowledgment of existence determinations, etc.:
Western Shoshone, 28859–28861
NOTICES
Indian entities recognized as eligible to receive services from BIA; list, 28953–28954

Interior Department
See Fish and Wildlife Service
See Indian Affairs Bureau
See Minerals Management Service
See Surface Mining Reclamation and Enforcement Office

Internal Revenue Service
RULES
Income taxes:
Personal property exchanges, 28818–28820

NOTICES
Agency information collection activities; proposals, submissions, and approvals, 28983–28987

Justice Department
See Alcohol, Tobacco, Firearms, and Explosives Bureau
See Justice Programs Office
NOTICES
Pollution control; consent judgments:
Abeldgaard, 28956
Gorman Park Properties, et al., 28956
W.J. Sherard Co., 28956–28957

Justice Programs Office
NOTICES
Agency information collection activities; proposals, submissions, and approvals, 28957–28959

Labor Department
See Employment and Training Administration

Maritime Administration
RULES
Merchant Marine training:
Maritime education and training, 28829–28833

Minerals Management Service
NOTICES
Environmental statements; availability, etc.:
Gulf of Mexico OCS—
Oil and gas operations, 28954–28955

Mine Safety and Health Federal Review Commission
See Federal Mine Safety and Health Review Commission

National Aeronautics and Space Administration
RULES
Grant and cooperative agreement handbook:
Research misconduct defined; agency requirements implemented, 28808–28809
NOTICES
Federal Acquisition Regulation (FAR):
Agency information collection activities; proposals, submissions, and approvals, 28920–28921

National Foundation on the Arts and the Humanities
NOTICES
Meetings:
Arts Advisory Panel, 28962
Federal Advisory Committee on International Exhibitions, 28962

National Highway Traffic Safety Administration
RULES
Motor vehicle theft prevention standard:
Response to petitions for reconsideration, 28843–28852
PROPOSED RULES
Motor vehicle safety standards:
Occupant crash protection—
Attaching child restraints to the LATCH system for the suppression test, 28878–28888
Tires; performance requirements, 28888–28895

National Institute of Standards and Technology
NOTICES
Information processing standards, Federal:
Withdrawal of FIPS 46-3, Fips 74, and FIPS 81, 28907–28908
Trade workshops:
Request for technical input, 28909

National Oceanic and Atmospheric Administration
RULES
Fishery conservation and management:
West Coast States and Western Pacific fisheries—
Pacific Coast groundfish, 28852–28853
NOTICES
Permits:
Marine mammals, 28909–28911

National Prison Rape Elimination Commission
NOTICES
Meetings, 28962

National Science Foundation
NOTICES
Meetings; Sunshine Act, 28962–28963

Nuclear Regulatory Commission
NOTICES
Environmental statements; availability, etc.:
Allegheny General Hospital, PA, 28963
Princeton Healthcare System, NJ, 28964
Meetings:
Reactor Safeguards Advisory Committee, 28964–28965

Personnel Management Office
RULES
Presidential Management Fellows Program, 28775–28783

Pipeline and Hazardous Materials Safety Administration
RULES
Pipeline safety:
Pipeline Operator Public Awareness Program, 28833–28843
PROPOSED RULES
Hazardous materials transportation:
Infectious substances; United Nations recommendations harmonization, 29170–29187

Presidential Documents
ADMINISTRATIVE ORDERS
Government agencies and employees:
Office of Personnel Management; designation of officers to act as Director (Memorandum of May 5, 2005), 28773–28774

Regulatory Information Service Center
PROPOSED RULES
Introduction to Unified Agenda of Federal Regulatory and Deregulatory Actions
Correction, 28988

Rural Utilities Service
RULES
Grants:
Household Water Well System Program, 28786–28791

Securities and Exchange Commission
NOTICES
Agency information collection activities; proposals, submissions, and approvals, 28965
Securities:
Suspension of trading—
Sino Silver Corp., 28965
Self-regulatory organizations; proposed rule changes:
American Stock Exchange LLC, 28965–28968

Chicago Board Options Exchange, Inc., 28968–28969
Chicago Stock Exchange, Inc., 28969–28970
National Association of Securities Dealers, Inc., 28970–28973
National Stock Exchange, Inc., 28973–28974

Small Business Administration
NOTICES
Meetings:
Regional Fairness Boards—
Region V; hearing, 28974–28975
Reports and guidance documents; availability, etc.:
Innovation Research Program Policy Directive, 28975–28979

Social Security Administration
RULES
Social security benefits:
Federal old age, survivors, and disability insurance—
Earnings; retirement beneficiaries annual test, 28809–28815

State Department
RULES
Exchange Visitor Program
Professor and research scholar participation, 28815–28818
NOTICES
Arms Export Control Act:
Countries not cooperating fully with U.S. antiterrorism efforts; determination and certification; congressional notification, 28979

Surface Mining Reclamation and Enforcement Office
RULES
Permanent program and abandoned mine land reclamation plan submissions:
Illinois, 28820–28824

Surface Transportation Board
NOTICES
Agency information collection activities; proposals, submissions, and approvals, 28979–28982
Rail carriers:
Waybill data; release for use, 28982
Railroad operation, acquisition, construction, etc.:
Illinois Central Railroad Co., 28982

Tennessee Valley Authority
NOTICES
Agency information collection activities; proposals, submissions, and approvals, 28979

Transportation Department
See Federal Aviation Administration
See Federal Motor Carrier Safety Administration
See Maritime Administration
See National Highway Traffic Safety Administration
See Pipeline and Hazardous Materials Safety Administration
See Surface Transportation Board

Treasury Department
See Alcohol and Tobacco Tax and Trade Bureau
See Internal Revenue Service
RULES
Practice and procedure:
Practice before Internal Revenue Service, 28824–28826

Separate Parts In This Issue

Part II
Transportation Department, Federal Motor Carrier Safety Administration, 28990–29060

Part III
Transportation Department, Federal Aviation Administration, 29062–29063

Part IV
Transportation Department, Federal Aviation Administration, 29066–29067

Part V
Health and Human Services Department, Centers for Medicare & Medicaid Services, 29070–29162

Part VI
Transportation Department, Federal Aviation Administration, 29164–29168

Part VII
Transportation Department, Pipeline and Hazardous Materials Safety Administration, 29170–29187

Reader Aids
Consult the Reader Aids section at the end of this issue for phone numbers, online resources, finding aids, reminders, and notice of recently enacted public laws.

To subscribe to the Federal Register Table of Contents LISTSERV electronic mailing list, go to http://listserv.access.gpo.gov and select Online mailing list archives, FEDREGTOC-L, Join or leave the list (or change settings); then follow the instructions.

CFR PARTS AFFECTED IN THIS ISSUE

A cumulative list of the parts affected this month can be found in the Reader Aids section at the end of this issue.

3CFR

Administrative Orders:

Memorandums:

Memorandum of March 11, 2003 (Superceded by Memorandum of May 5, 2005) 28773

Memorandum of May 5, 2005 28773

5 CFR

213 28775
297 28775
315 28775
334 28775
362 28775
537 28775
550 28775

7 CFR

97 28783
1776 28786

14 CFR

39 (7 documents) 28791, 28793, 28795, 28797, 28800, 28803, 28806
93 29062
150 29066
1260 28808
1273 28808
1274 28808

Proposed Rules:

39 (4 documents) 28854, 28857, 28988
401 29164
404 29164
413 29164
415 29164
420 29164

20 CFR

404 28809

22 CFR

62 28815

25 CFR

Proposed Rules:

61 28859

26 CFR

1 28818

27 CFR

Proposed Rules:

9 (4 documents) 28861, 28865, 28870, 28873

30 CFR

913 28820

31 CFR

10 28824

33 CFR

165 28826

40 CFR

52 (2 documents) 28826, 28988

Proposed Rules:

52 28878

42 CFR

Proposed Rules:

424 29070

46 CFR

310 28829

49 CFR

192 28833
195 28833
541 28843
543 28843
545 28843

Proposed Rules:

171 29170
172 29170
173 29170
175 29170
360 28990
365 28990
366 28990
368 28990
387 28990
390 28990
571 (2 documents) 28878, 28888

50 CFR

660 28852

Proposed Rules:

17 28895

Federal Register
Vol. 70, No. 96
Thursday, May 19, 2005

Presidential Documents

Title 3—

The President

Memorandum of May 5, 2005

Designation of Officers of the Office of Personnel Management to Act as Director of the Office of Personnel Management

Memorandum for the Director of the Office of Personnel Management

By the authority vested in me as President under the Constitution and laws of the United States of America and pursuant to the Federal Vacancies Reform Act of 1998, 5 U.S.C. 3345 *et seq.*, I hereby order that:

Section 1. *Order of Succession.*

During any period when the Director of the Office of Personnel Management (Director), or the Deputy Director of the Office of Personnel Management, has died, resigned, or otherwise become unable to perform the functions and duties of the office of Director, the following officers of the Office of Personnel Management, in the order listed, shall perform the functions and duties of the office of Director, if they are eligible to act as Director under the provisions of the Federal Vacancies Reform Act of 1998, until such time as at least one of the officers mentioned above is able to perform the functions and duties of the office of Director:

General Counsel;

Chief of Staff;

Director, Office of Communications and Public Liaison;

Director, Office of Congressional Relations;

Associate Director, Human Resources Products and Services;

Associate Director for Management;

Associate Director, Strategic Human Resources Policy;

Chief Financial Officer;

Associate Director, Human Capital Leadership and Merit Systems Accountability;

Deputy Associate Director, Center for Investigations Services; and

Director, Federal Executive Institute.

Sec. 2. *Exceptions.*

(a) No individual who is serving in an office listed in section 1 in an acting capacity, by virtue of so serving, shall act as Director pursuant to this memorandum.

(b) Notwithstanding the provisions of this memorandum, the President retains discretion, to the extent permitted by the Federal Vacancies Reform Act of 1998, 5 U.S.C. 3345–3349d, to depart from this memorandum in designating an acting Director.

Sec. 3. *Prior Memorandum Superceded.*

This memorandum supercedes the Presidential Memorandum of March 11, 2003, entitled, ''Designation of Officers of the Office of Personnel Management to Act as Director of the Office of Personnel Management.''

Sec. 4. *Publication.*

You are authorized and directed to publish this memorandum in the **Federal Register**.

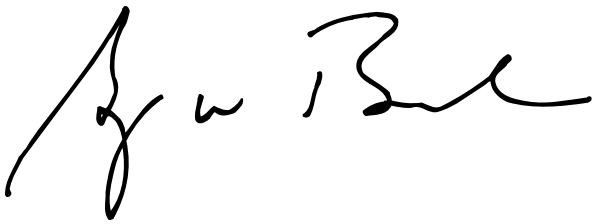

THE WHITE HOUSE,
Washington, May 5, 2005.

[FR Doc. 05–10106
Filed 5–18–05; 8:45 am]
Billing code 6325–48–P

Rules and Regulations

Federal Register
Vol. 70, No. 96
Thursday, May 19, 2005

This section of the FEDERAL REGISTER contains regulatory documents having general applicability and legal effect, most of which are keyed to and codified in the Code of Federal Regulations, which is published under 50 titles pursuant to 44 U.S.C. 1510.

The Code of Federal Regulations is sold by the Superintendent of Documents. Prices of new books are listed in the first FEDERAL REGISTER issue of each week.

OFFICE OF PERSONNEL MANAGEMENT

5 CFR Parts 213, 297, 315, 334, 362, 537, and 550

RIN 3206–AK27

Excepted Service, Privacy Procedures for Personnel Records, Career and Career-Conditional Employment, Temporary Assignment of Employees Between Federal Agencies and State, Local, and Indian Tribal Governments, Institutions of Higher Education, and Other Eligible Organizations, Presidential Management Fellows Program, Repayment of Student Loans, and Pay Administration (General)

AGENCY: Office of Personnel Management.

ACTION: Final rule.

SUMMARY: The Office of Personnel Management (OPM) is issuing final regulations modifying the Presidential Management Intern (PMI) Program. The regulations implement Executive Order 13318, which renames the PMI Program as the Presidential Management Fellows (PMF) Program, with two components: Presidential Management Fellows (Fellows) and Senior Presidential Management Fellows (Senior Fellows). The regulations prescribe OPM and agency responsibilities with respect to administration of the PMF Program and amend other regulations to reflect the changes established by the Executive Order. In addition, the regulations allow the OPM Director to provide guidance for an orderly transition from the PMI Program to the PMF Program.

DATES: *Effective Date*: This final rule is effective June 20, 2005.

FOR FURTHER INFORMATION CONTACT: Larry Lorenz by telephone on 202–606–0960, by FAX on 202–606–2329, by TDD on 202–418–3134, or by e-mail at *employ@opm.gov*.

SUPPLEMENTARY INFORMATION: The President signed Executive Order (E.O.) 13318 on November 21, 2003, modernizing the Presidential Management Intern (PMI) Program, in keeping with his emphasis on the strategic management of the Federal Government's human capital. The E.O. changed the name of the PMI Program to the Presidential Management Fellows (PMF) Program to better reflect its high standards, rigor, and prestige. The PMF Program has two components: Presidential Management Fellows (generally comparable to PMIs and hereafter referred to as Fellows); and new Senior Presidential Management Fellows (hereafter referred to as Senior Fellows). The E.O. charges the OPM Director with prescribing regulations for the PMF Program and with providing for an orderly transition from the PMI Program to the PMF Program.

On January 26, 2004, OPM issued proposed regulations at 69 FR 3526 and requested comments by March 26, 2004. OPM received written comments from 12 agencies, 1 public service organization, 11 current Fellows, 1 former PMI, and 1 Federal employee.

Discussion of Comments

Generally, the comments were very supportive of the proposed regulations. Below we summarize and respond to comments that suggested changes or requested clarification.

Definitions

One agency commented the new Senior Fellows component will be used to circumvent requirements for Senior Executive Service (SES) placements to the detriment of civil servants. OPM disagrees. We believe the Senior Fellows program will be attractive to highly qualified mid-career applicants from inside and outside the Federal Government and selection will be merit-based.

One agency noted excepted service agencies are not required to have Executive Resources Boards (ERBs). Our research confirmed this. We learned some small agencies and some very large agencies have assigned agency-wide executive development responsibilities to other senior agency positions, boards, committees, or groups. We agree the PMF regulations need to accommodate all Executive agencies.

Accordingly, we expanded the ERB definition at 5 CFR 362.101(b) to also mean the agency head or senior agency official or officials who have been given executive resource management and oversight responsibility by the agency head. We did this to accommodate differences among Executive agencies, while maintaining the Program's requirement for ERB-level participation and certification for both Fellows and Senior Fellows.

In addition, we are also clarifying the definition of a qualifying college or university for consistency with OPM's longstanding policy on the acceptability of higher education.

Agency Programs—Number of Fellows and Senior Fellows

One agency suggested we clarify whether the OPM Director will determine separately the total number of Fellow appointments and the total number of Senior Fellow appointments. We agree and have changed 5 CFR 362.201(a) to specify that the OPM Director will determine annually the number of Fellows and the number of Senior Fellows appointments.

One former PMI and a current Fellow asserted that removing the cap (the maximum number of PMI appointments allowed under the now-superceded E.O.) will hurt the image of the program by lowering standards and expectations. Another Fellow suggested raising the cap. OPM does not believe removal of a fixed limit or cap will impugn the image of the program. We note the regulations require the OPM Director to determine the number of Fellows and Senior Fellows, annually, based on input from the Chief Human Capital Officers Council and agency needs, especially with regard to managerial and leadership succession.

Selection

One agency suggested we define ''exceptional record'' and the criteria used to identify an exceptional record in 5 CFR 362.202(c)(1). We are not adopting this suggestion. OPM believes the experiences and accomplishments of Senior Fellow candidates may vary to such an extent that a ''one size fits all'' definition or set of criteria may dissuade interested candidates from applying to the program. In addition, we prefer to give the Senior Presidential Management Fellows Selection Committee (SPMFSC) the flexibility to

evaluate each candidate's records without constraints in regulation. The Committee and OPM may develop criteria to evaluate applications.

Three agencies expressed concerns with the ability and performance of nominating schools to determine preliminary eligibility for veterans' preference and suggested OPM provide training or additional guidance. We agree and plan to review and revise the current guidance or provide training as needed.

One agency requested clarification regarding how veterans' preference procedures apply when selecting Program finalists for positions in the agency. We added references to 5 CFR 302 in part 362. Part 302 describes the application of veterans' preference in the excepted service. In addition, we will review current guidance and provide additional guidance if needed.

An agency suggested OPM expand the evaluation and selection process for Fellows to include a PMF Selection Committee with interagency representation, similar to what is proposed for Senior Fellows. We do not agree a PMF selection committee is necessary; the current process works well.

Appointment and Extensions

One agency suggested it is inappropriate for the OPM Director, a political appointee, to appoint members to the SPMFSC, which determines and recommends finalists. The agency recommends OPM ask agencies to nominate eligible members to serve on the committee, *e.g.*, Chief Human Capital Officers or other high-level career managers, because agencies have a significant interest. OPM sees no conflict of interest in having the OPM Director appoint members to the SPMFSC. We point out the SPMFSC will be chaired by a career member of the SES and will include other senior agency career executives as members.

One agency suggested OPM specifically reference 5 CFR 317.502 in 5 CFR 213.3102(jj) and 5 CFR 362.209(c). Section 317.502 pertains to the Qualifications Review Board certification. We have modified 5 CFR 362.209(c) to include the reference, where we think it is appropriate.

The same agency suggested changing 5 CFR 317.502 to add a Senior Fellows category. We find no reason to change 5 CFR 317.502 because 5 CFR 362.204(e)(1) provides that ERB-certified Senior Fellows are considered in the same manner as a graduate of an OPM-approved SES Candidate Development Program (CDP).

An agency asked us to clarify whether Fellows who have served the initial 2-year period, and then are appointed as Senior Fellows, are subject to a new 2-year period. Although the answer is yes, the Senior Fellows component is not designed for those graduating Fellows who may lack the significant work and supervisory experience needed to demonstrate their readiness for senior management. We agree some clarification is needed and will provide this in guidance rather than in the regulation.

One agency suggested OPM not allow non-citizens to be appointed as Fellows. The agency noted in today's climate of security issues and terrorism, appointing non-citizens is not practical and may present problems. OPM is not adopting this suggestion because it would limit agency flexibility. Current rules allow certain non-citizens to be appointed in the excepted service, and we see no reason to treat the PMFs differently. Agencies may establish more restrictive citizenship requirements for appointments into their PMF positions. Fellows and Senior Fellows must be U.S. citizens at the time of conversion into the competitive service.

One agency suggested we clarify who may extend the appointment of Fellows and Senior Fellows for up to 1 additional year. Section 362.203(a)(3)(iii) now reads, ''The OPM Director, or the Director's designee, may approve an extension.''

One agency suggested agency requests for extension of Fellowships come from an appropriate agency representative (supervisor or PMF Coordinator), rather than requiring it from the agency head. OPM agrees extension requests may come from someone other than the agency head and have changed the regulations in § 362.203(a)(3)(iii) to allow the chair of the agency's ERB, or equivalent, to make such requests.

Development, Evaluation, Promotion, and Certification

One agency suggested we either combine the Senior Fellow and SES CDP or afford Senior Fellows noncompetitive promotion and conversion eligibility only to the GS–15 (or equivalent) level. If we accepted the latter recommendation, the agency recommended Senior Fellows interested in SES positions would have to compete for SES and CDP vacancies in accordance with the same procedures and under the same conditions as other employees. We are not adopting this suggestion for several reasons. The Senior Fellows program is intended to produce candidates as part of a progression towards placement in the SES. However, Senior Fellows are not entitled to placement in the SES. Placement depends upon the individual's level of readiness for SES placement as well as upon agency needs. Limiting the conversion of Senior Fellows to the GS–15 level would eliminate a key flexibility of this program; *i.e.*, agencies' ability to select truly exceptional individuals for placement in the SES. The SES CDP provides a separate pool of candidates, who most likely will come from different recruitment sources, for SES placement. They are complementary programs for SES succession planning.

One individual questioned the legal basis for excepting Senior Fellows from the requirement to compete under SES merit staffing requirements as a prerequisite to appointment in the SES. Subchapter VIII of chapter 33, title 5, United States Code, gives OPM authority to prescribe SES appointment criteria and also to establish programs for the systematic development of candidates for the SES. Executive Order 13318 authorizes the establishment of the PMF Program and OPM has chosen to make this Program a part of its SES development effort. Section 6 of E.O. 13318 gives OPM the authority to prescribe regulations for the Senior Fellow program. In addition, we note the structure of the Senior Fellows program requires competitive entry and developmental rigor comparable to SES CDPs as required by 5 CFR part 412.

One agency suggested OPM determine the grade level for which each finalist is qualified. The agency noted that a decentralized process for determining whether Fellows qualify for grades above the GS–9 level would result in significant hiring delays and hinder the ability of Fellows to enter on duty in a timely fashion. We are not adopting this suggestion because agencies may develop their own qualification requirements for Schedule A positions and are in the best position to evaluate the relevance of the individual's specialized education or experience to the position. OPM will determine whether applicants are minimally qualified, and agencies can apply the qualification standards and make appropriate decisions for hiring Fellows and Senior Fellows above the minimum level as they routinely do for any excepted service hire.

Another agency suggested an alternative to the proposed rules for hiring Fellows above the GS–9 level. This alternative is based on a model the agency currently uses when making certain excepted service appointments at various grade levels. OPM is not

adopting this suggestion because we believe each agency should have the flexibility to develop policies and criteria for promotion, which best meet its needs as required by 5 CFR 362.204(d)(1). Further, all that is required to hire a Fellow above the GS–9 level is for the agency to determine whether the Fellow meets the qualifications for the grade level.

One Fellow assumed incorrectly that those entering at the GS–12 level could not be promoted for 2 years. The PMF regulations allow agencies to promote Fellows to GS–13 at any time during the 2-year period.

Two agencies and one Fellow doubted that their agency will hire above the GS–9 level; one agency believed they will instead continue to use available recruitment options such as student loan repayment, superior qualifications appointment, and accelerated promotion, while another agency pointed to tight budgets as a deterrent to use of this flexibility. We understand some agencies will not need or want to hire above the GS–9 level. However, we believe this flexibility is extremely useful in accommodating agency and candidate-specific circumstances. Accordingly, we are adopting the regulations in this area without substantive change.

One agency suggested the requirement to assign a mentor to a Senior Fellow be made optional. OPM is not adopting this suggestion because we believe assigning senior level mentors to Senior Fellows is critical to the training and development of individuals who are being groomed for possible future placement in the SES. For the same reason, we established a comparable requirement for SES CDPs, see 5 CFR 412.104(e)(3).

One agency suggested changing the requirement that Senior Fellows complete formal training through, ''the OPM-approved SES candidate development program,'' to ''an OPM-approved SES candidate development program.'' Another agency commented that agencies must have the latitude to determine whether they will use an existing SES CDP of their choice, and to determine if an SES CDP is appropriate based on succession planning requirements. Agencies may use any OPM-approved SES CDP, and we have revised the proposed 5 CFR 362.204(b)(2)(ii) to state this.

One agency suggested the long-term developmental assignment requirement for Senior Fellows will deter agencies with limited travel and training budgets from using this program. The agency recommended OPM give agencies the option of placing Senior Fellows on long-term developmental assignments or providing a plan of acceptable short-term developmental assignments. We agree that 12-month developmental assignments may be burdensome, so we changed their duration to a minimum of 9 months (in addition to classroom training). We have revised the proposed 5 CFR 362.204(b)(4)(ii) accordingly.

One agency wanted OPM to define ''developmental assignment'' and the optional ''rotational assignment.'' The agency sought clarification as to what constitutes acceptable developmental and rotational assignments and whether both agency external and internal assignments would be acceptable. OPM is not adopting this suggestion because we believe defining these terms may limit agencies' creativity in terms of designing these assignments. We prefer to give agencies discretion to define the nature or content of their assignments and to tailor them to meet agency-specific needs.

One agency suggested holding Senior Fellows to the same requirements as participants in a formal SES Candidate Development Program. We disagree and note that Senior Fellows are appointed in the excepted service, and they are not subject to time-in-grade (TIG) requirements. This condition provides agencies with added flexibility to promote these individuals when they qualify.

One agency noted that eliminating TIG requirements for promoting Fellows could result in perceptions of inequities among non-Fellow employees and lead to morale problems for agencies not authorized to use pay banding. Another agency commented that the more rapid promotion of Fellows will negatively impact coworkers. OPM considered these comments and decided to give agencies the same ability to accelerate promotions as exists for other excepted service positions and require agencies to establish criteria and procedures for accelerated promotions.

Another agency recommended retaining the TIG limitation for Fellows until TIG is eliminated for the competitive service. For the reasons stated in the paragraph above we see no reason to require TIG for Fellows and Senior Fellows when it does not apply to other excepted service employees.

One Fellow asked OPM to clarify how promotions without TIG will work, and one agency asked OPM to define the criteria and qualifications for accelerated promotion. Promotions without TIG work in the same fashion as career ladder promotions, but without regard to the 12-month rule; *i.e.*, when an individual meets the qualification requirements for the next highest grade, the agency may promote the individual. The regulations require agencies to establish policies and criteria for promotion. We will provide guidance identifying relevant issues and provide access to any relevant samples or models agencies may give us.

One agency anticipated the elimination of TIG may result in a ''hodge-podge of implementation schemes'' that ''will be used to circumvent civil service regulations.'' We disagree because agencies currently have the same discretion for any excepted service employees. Therefore, removing the TIG restriction for Fellows does not circumvent civil service regulations. We will provide agencies with supplementary guidance for developing criteria and procedures for accelerated promotion.

Accordingly, we are adopting regulations regarding TIG without substantive change.

For the sake of clarity and to avoid redundancy OPM has removed the references to coverage under parts 432 and 752 in section 362.204, paragraph (c)(3). The appeal rights for Fellows and Senior Fellows are found in section 362.208, paragraph (d), which for purposes of determining whether Fellows and Senior Fellows have appeal rights, says they are treated as excepted service employees. Fellows and Senior Fellows in systems not subject to appeal rights under 5 U.S.C. chapters 43 or 75, such as the Department of Homeland Security, Central Intelligence Agency and National Security Personnel System, have the appeal rights as provided by the equivalent authorities under their systems, if any.

Graduate Degree Waiver

One agency suggested OPM develop criteria for waiving the graduate study requirement for Senior Fellow candidates to assist agencies in attracting quality leaders, while ensuring high-level program standards. OPM does not believe adding criteria to the regulations is necessary. We revised the regulations in section 362.205 to provide the OPM Director, or the Director's designee, one general waiver authority.

Two agencies and one Fellow recommended we require a graduate degree for Senior Fellows. We are retaining the flexibility for the OPM Director, or the Director's designee, to waive the graduate degree requirement per section 362.205 because Senior Fellow candidates may have substantially high-level work experience or accomplishments, which may be substituted for a graduate degree in certain situations.

One agency suggested OPM define what an ''exceptional candidate'' is for the purpose of waiving the graduate degree requirement. We choose not to define ''exceptional candidate'' in regulations because doing so could limit the Senior Fellow Selection Committee's ability to evaluate exceptional candidates on a case-by-case basis.

One agency suggested the regulations include information on how to request graduate degree waivers. We agree ''how to'' information should be readily available. However, we plan to provide this as guidance rather than placing it in regulation.

Another agency suggested agencies should be able to require Senior Fellows, who received a waiver of the graduate degree requirement, to get a graduate degree. We disagree and are not adopting this suggestion. A waiver signifies an individual's exceptional record of accomplishment is a sufficient substitute for a graduate degree.

Program Completion and Placement

Seven agencies and one Fellow recommended we drop the requirement for an agency ERB to certify each Fellow's and Senior Fellow's successful completion of all Program requirements. We disagree. Generally ERBs (or equivalents) have relevant competent evaluation experience, and we believe they should have oversight of their agency's PMF Program. Fellows may one day be selected for senior executive level positions; therefore, ERB certification should be required for these individuals. Further, we believe ERB certification reinforces the agency's commitment to this Program while protecting the prestige and competitive nature of this Presidential Program. As discussed above, we have expanded the definition of ERB for the purposes of this regulation to include agency officials or bodies who have equivalent responsibility. See 5 CFR 362.101(b) below.

Two agencies suggested conversion to the competitive service following successful completion of the Senior Fellows program be discretionary rather than mandatory. We disagree and believe the lack of mandatory conversion, following successful completion of the program and 2 years of rigorous training, will dissuade talented individuals from participating in the program and adversely affect the significant investment in the selection and development of high potential individuals. We also received a similar comment concerning Fellows and disagree for the same reasons.

One agency recommended more flexibility with regard to the timing of placements. We note 5 CFR 362.209(b)(1) requires agencies to appoint a Fellow or Senior Fellow who has been certified as having successfully completed the Program, ''effective on, or before the expiration of the individual's excepted appointment, including extensions.'' We agree the immediate placement requirement has the potential to create an unnecessary administrative burden on agencies. To alleviate any processing difficulties which may arise from this requirement, we are delegating to agencies the authority to extend an appointment up to 120 days. Agencies may appoint a Fellow or Senior Fellow who has been certified as having successfully completed the Program at any time during this 120-day period. This new provision is consistent with flexibilities contained in other programs, such as the Federal Career Intern Program, which allows for conversion to the competitive service upon successful completion of the program. OPM retains the authority for extensions beyond 120 days up to 1 year. Accordingly, we have added language at 5 CFR 362.203(a)(3)(iv) and revised 5 CFR 362.209(b)(1) to reflect this.

Transition From the Presidential Management Intern (PMI) Program

Comments from three agencies and 10 Fellows noted the proposed regulations did not address how individuals appointed as PMIs under the previous Executive order and implementing regulations will transition to the new PMF regulations. Most agencies and Fellows suggested such individuals be covered by these new regulations. Several agencies and Fellows suggested current Fellows be transitioned into the PMF Program and be subject to its provisions. We agree that agencies be permitted to avail themselves of the new flexibilities contained in this regulation with respect to existing fellows.

In addition, two agencies and four Fellows suggested OPM issue guidance addressing various transition issues, including ''how and when to implement each * * * ''program change.'' OPM agrees agencies need transition guidance on this subject as well. We have revised these regulations to provide that OPM will issue such guidance to agencies.

One Fellow and one former PMI suggested highly qualified Fellows and PMIs with substantial high-level work experience should have an opportunity to be evaluated in advance and appointed to Senior Fellow positions. We disagree. The Senior Fellows program is for truly exceptional individuals who already possess exemplary leadership, managerial, or professional experience. Qualified Fellows and former PMIs may apply for the Senior Fellows program the same as any individual.

Miscellaneous Comments

One organization recommended requiring the Chief Human Capital Officers Council to include an evaluation of the PMF Program in its annual report to Congress. We decided not to include such a requirement at this time. However, we will add specific authority codes in the Guide to Processing Personnel Actions to facilitate future Program evaluation using data submitted by agencies for the Central Personnel Data File.

One agency asked if there was a ''fallback eligibility'' for Federal employees who become Senior Fellows and do not successfully complete the Senior Fellow program. Agencies will not be required to place Senior Fellows who fail to successfully complete the Senior Fellow program. When selecting a Senior Fellow who is a Federal employee in a competitive service position, agencies must follow notification and documentation procedures in 5 CFR 302.102(b). Further, agencies may use existing appointing authorities when appropriate and desirable to reinstate former competitive service employees.

Regulatory Flexibility Act

I certify that this regulation will not have a significant economic impact on a substantial number of small entities because it affects only certain potential applicants and Federal employees.

Executive Order 12866, Regulatory Review

This rule has been reviewed by the Office of Management and Budget in accordance with Executive Order 12866.

List of Subjects in 5 CFR Parts 213, 297, 315, 334, 362, 537, and 550

Administrative practice and procedure, Claims, Colleges and universities, Government employees, Indians, Intergovernmental relations, Privacy, Reporting and recordkeeping requirements, Wages.

Office of Personnel Management.

Dan G. Blair,

Acting Director.

■ Accordingly, OPM is amending 5 CFR parts 213, 297, 315, 334, 362, 537, and 550 as follows:

PART 213—EXCEPTED SERVICE

■ 1. Revise the authority citation for part 213 to read as follows:

Authority: 5 U.S.C. 3161; 5 U.S.C. 3301 and 3302; E.O. 10577, 3 CFR, 1954–1958 Comp., p. 218; Sec. 213.101 also issued under 5 U.S.C. 2103; Sec. 213.3102 also issued under 5 U.S.C. 3301, 3302, 3307, 3391–3396, 8337(h), and 8456; E.O. 13318; 38 U.S.C. 4301 *et seq.*; Pub. L. 105–339, 112 Stat 3182–83; and E.O. 13162.

■ 2. Revise paragraph (ii) of § 213.3102 and add paragraph (jj) to read as follows:

§ 213.3102 Entire executive civil service.

* * * * *

(ii) Positions of Fellows in the Presidential Management Fellows Program. Initial appointments of Fellows are made at either the GS–9, GS–11, or GS–12 level (or their equivalents), depending on the candidate's qualifications. Appointments are made under this authority for 2 years; however, upon approval of OPM, the head of the department, agency, or component within the Executive Office of the President may extend the appointment for up to 1 additional year. Upon the Fellow's satisfactory completion of the Program, as certified by the employing agency's Executive Resources Board (ERB) or equivalent, the employing agency must noncompetitively appoint the Fellow to a full-time, permanent position in the competitive service as prescribed in § 315.708 and part 362 of this chapter.

(jj) Positions of Senior Fellows in the Presidential Management Fellows Program. Initial appointments are made at the GS–13, GS–14, or GS–15 level (or their equivalents), depending on the candidate's qualifications. Appointments may be made under this authority for up to 2 years; however, upon approval of OPM, the head of the department, agency, or component within the Executive Office of the President may extend the Senior Fellow's appointment for up to 1 additional year. Upon the Senior Fellow's satisfactory completion of the Program, as certified by the employing agency's Executive Resources Board (ERB) or equivalent, the employing agency must noncompetitively appoint the Fellow to a full-time, permanent position in the competitive service as prescribed in § 315.708 and part 362 of this chapter. If a Senior Fellow successfully completes the Program, as certified by the appointing agency's ERB or equivalent, he/she may, at the agency's discretion, be appointed to a position in the Senior Executive Service (SES) (or the equivalent) without further competition and only one time, in the same manner, and subject to the same Qualifications Review Board review, as an individual who has successfully completed an OPM-approved SES candidate development program under parts 317 and 412 of this chapter.

* * * * *

PART 297—PRIVACY PROCEDURES FOR PERSONNEL RECORDS

■ 3. The authority citation for part 297 continues to read as follows:

Authority: Sec. 3, Pub. L. 93–579, 88 Stat. 1896 (5 U.S.C. 552a).

Subpart E—Exempt Records

■ 4. Revise paragraph (b)(6) of § 297.501 to read as follows:

§ 297.501 Exemptions.

* * * * *

(b) * * *

(6) *Presidential Management Fellows Program Records (OPM/CENTRAL–11).* All information in these records that meets the criteria stated in 5 U.S.C. 552a(k)(6) is exempt from the requirements of 5 U.S.C. 552a(d), relating to access to and amendment of records by the data subject. This exemption is claimed because portions of this system relate to testing or examining materials used solely to determine individual qualifications for appointment or promotion in the Federal service and access to or amendment of this information by the data subject would compromise the objectivity and fairness of the testing or examining process.

* * * * *

PART 315—CAREER OR CAREER-CONDITIONAL EMPLOYMENT

■ 5. Revise the authority citation for part 315 to read as follows:

Authority: 5 U.S.C. 1302, 3301, and 3302; E.O. 10577, 3 CFR, 1954–1958 Comp., p. 218, unless otherwise noted; and E.O. 13162. Secs. 315.601 and 315.609 also issued under 22 U.S.C. 3651 and 3652. Secs. 315.602 and 315.604 also issued under 5 U.S.C. 1104. Sec. 315.603 also issued under 5 U.S.C. 8151. Sec. 315.605 also issued under E.O. 12034, 3 CFR, 1978 Comp., p. 111. Sec. 315.606 also issued under E.O. 11219, 3 CFR, 1964–1965 Comp., p. 303. Sec. 315.607 also issued under 22 U.S.C. 2506. Sec. 315.608 also issued under E.O. 12721, 3 CFR, 1990 Comp., p. 293. Sec. 315.610 also issued under 5 U.S.C. 3304(d). Sec. 315.611 also issued under Section 511, Pub. L. 106–117, 113 Stat. 1575–76. Sec. 315.708 also issued under E.O. 13318. Sec. 315.710 also issued under E.O. 12596, 3 CFR, 1987 Comp., p. 229. Subpart I also issued under 5 U.S.C. 3321, E.O. 12107, 3 CFR, 1978 Comp., p. 264.

Subpart B—The Career-Conditional Employment System

■ 6. Revise paragraph (b)(1)(xiii) of § 315.201 to read as follows:

§ 315.201 Service requirement for career tenure.

* * * * *

(b) * * *

(1) * * *

(xiii) The date of appointment as a participant in the Presidential Management Fellows Program under the provisions of Executive Order 13318, provided the employee's appointment is converted without a break in service to career or career-conditional appointment under § 315.708;

* * * * *

Subpart G—Conversion to Career or Career-Conditional Employment From Other Types of Employment

■ 7. Revise § 315.708 to read as follows:

§ 315.708 Conversion based on service as a Fellow or Senior Fellow in the Presidential Management Fellows Program.

(a) *Agency authority.* (1) An agency, not excepted from the competitive service, must appoint a Fellow or Senior Fellow to a full-time, permanent position in the competitive service without further competition when the Fellow or Senior Fellow:

(i) Has satisfactorily completed the Program as outlined in part 362 of this chapter; and

(ii) Meets the citizenship requirement set forth in part 338 of this chapter.

(2) A Fellow or Senior Fellow who was initially appointed to a permanent position in an agency excepted from the competitive service upon completion of the Program may be appointed subsequently to a full-time permanent position in the competitive service without further competition subject to paragraph (a)(1)(ii) of this section.

(b) *Tenure upon conversion.* (1) Except as provided in paragraph (b)(2) of this section, a Fellow or Senior Fellow appointed under paragraph (a) of this section becomes a career-conditional employee.

(2) A Fellow or Senior Fellow appointed under paragraph (a) of this section becomes a career employee when he/she has completed the service requirement for career tenure or is excepted from it under § 315.201(c).

(c) *Acquisition of Competitive Status.* A Fellow or Senior Fellow appointed to a full-time, permanent position in the competitive service under this section does not serve a probationary period and acquires competitive status immediately upon appointment.

PART 334—TEMPORARY ASSIGNMENT OF EMPLOYEES BETWEEN FEDERAL AGENCIES AND STATE, LOCAL, AND INDIAN TRIBAL GOVERNMENTS, INSTITUTIONS OF HIGHER EDUCATION, AND OTHER ELIGIBLE ORGANIZATIONS

■ 8. The authority citation for part 334 continues to read as follows:

Authority: 5 U.S.C. 3376; E.O. 11589, 3 CFR 557 (1971–1975).

■ 9. Revise the definition of *Employee* in § 334.102 to read as follows:

* * * * *

Employee means an individual serving in a Federal agency under a career or career-conditional appointment including career appointees in the Senior Executive Service, individuals under appointments of equivalent tenure in excepted service positions, and Fellows and Senior Fellows in the Presidential Management Fellows Program; or an individual employed for at least 90 days in a career position with a State, local, or Indian tribal government, institution of higher education, or other eligible organization;

* * * * *

■ 10. Revise part 362 to read as follows:

PART 362—PRESIDENTIAL MANAGEMENT FELLOWS PROGRAM

Subpart A—Definitions

Sec.
362.101 Definitions.

Subpart B—Program Administration

362.201 Agency programs.
362.202 Announcement, nomination, and selection.
362.203 Appointment and extensions.
362.204 Development, evaluation, promotion, and certification.
362.205 Waiver.
362.206 Movement between departments or agencies.
362.207 Withdrawal and readmission.
362.208 Resignation, termination, reduction in force, and appeal rights.
362.209 Placement upon completion.
362.210 Transition.

Authority: E.O. 13318 of Nov. 21, 2003, 3 CFR, 2003 Comp., p. 265.

Subpart A—Definitions

§ 362.101 Definitions.

For purposes of this part,

An *agency* means a component within the Executive Office of the President, or an Executive department, Government corporation, or independent establishment as defined in 5 U.S.C. 101, 103, and 104, respectively.

An *Executive Resources Board (ERB)* has the same meaning as specified in § 317.501(a) of this chapter; in those agencies that are not required to have an ERB pursuant to that section, it means the senior agency official or officials who have been given executive resource management and oversight responsibility by the agency head.

A *Presidential Management Fellow* or *Fellow* is an individual appointed, at the GS–9, GS–11, or GS–12 level (or equivalent), in the excepted service under § 213.3102(ii) of this chapter, or under an agency-specific authority if the agency is excepted from the competitive service. The individual must have completed a graduate course of study at a qualifying college or university, received the nomination of the dean or academic director, successfully completed an Office of Personnel Management (OPM) administered assessment process, been selected as a finalist, and been appointed by an agency as a Presidential Management Fellow.

A *Qualifications Review Board (QRB)* has the same meaning as specified in § 317.502(a) of this chapter.

A *qualifying college or university* is an academic institution that meets the requirements as stated in the ''General Policies and Instructions'' section of the Office of Personnel Management's ''Operating Manual: Qualification Standards for General Schedule Positions,'' under ''Educational and Training Provisions or Requirements.'' The Operating Manual is available on OPM's Web site at *http://www.opm.gov.*

A *Senior Presidential Management Fellow* or *Senior Fellow* is an individual appointed, at the GS–13, GS–14, or GS–15 level (or equivalent), in the excepted service under § 213.3102(jj) of this chapter, or under an agency-specific authority if the agency is excepted from the competitive service. The individual must have completed a graduate course of study at a qualifying college or university; have an outstanding record of achievement in an applicable leadership, policy, managerial, professional, or technical position or area; have successfully completed an OPM-administered assessment process; been selected as a finalist by the OPM Director, or the Director's designee; and been appointed by an agency as a Senior Fellow.

Subpart B—Program Administration

§ 362.201 Agency programs.

(a) On or about October 1 of each year, the OPM Director will determine the number of Fellows and the number of Senior Fellows that may be appointed during that fiscal year. Those determinations will be based on input from the Chief Human Capital Officers Council, as well as input from agencies not represented on the Council.

(b) Thereafter, subject to the provisions and requirements of this chapter, an agency may appoint individuals selected by the OPM Director, or the Director's designee, as Fellows finalists and/or Senior Fellows finalists according to its short-, medium-, and long-term senior leadership and related (senior policy, professional, technical, and equivalent) recruitment, development, and succession requirements, as set forth in 5 U.S.C. 1103(c)(2)(C).

§ 362.202 Announcement, nomination, and selection.

(a) At least once each year, OPM will announce the availability of Fellow and Senior Fellow appointments and conduct a competition for the selection of finalists as set forth below.

(b) *Fellows.* (1) Graduate students from all academic disciplines who complete or expect to complete an advanced degree from a qualifying college or university by August 31 of the academic year in which the competition is held, are eligible to become Fellows. These individuals must demonstrate an exceptional ability for, as well as a clear interest in and commitment to, leadership in the analysis and management of public policies and programs.

(2) For an individual to apply to become a Fellow:

(i) His/her school must first establish a competitive nomination process to ensure that all eligible graduate students are aware of the Presidential Management Fellows Program and know how to apply for nomination. The school must establish procedures to ensure that each candidate receives careful and thorough review and receives equal opportunity for nomination.

(ii) He/she must compete in the school's nomination process.

(iii) His/her school must rate those who want to be considered for nomination either qualified or not qualified. The school will determine preliminary eligibility for veterans' preference, and must nominate any student who is eligible for veterans' preference and is found qualified for nomination. Students eligible for veterans' preference who believe they met the school's nomination qualification requirements, but were not nominated, may obtain a review by OPM by requesting it in writing.

(iv) He/she must be officially nominated by the dean, chairperson, or

academic program director using an OPM-provided application form.

(3) OPM will select Fellow finalists based on an OPM evaluation of each candidate's experience and accomplishments based on his/her application and the results of a rigorous structured assessment process.

(4) OPM will notify individual candidates of their selection as a Fellow finalist. OPM will send all participating agencies the list of Fellows finalists for consideration. Agencies may select and appoint a finalist as a Fellow.

(5) Veterans' preference will be applied pursuant to part 302 of this chapter.

(c) *Senior Fellows.* (1) Any individual with an exceptional record of experience and achievement in a leadership (supervisory or managerial), policy, professional, or technical position, in an area relevant to the appointing agency's mission or succession requirements, and who has completed a graduate course of study from a qualifying college or university, may apply for appointment as a Senior Fellow. Candidates should evidence a strong commitment to public service and be able to clearly demonstrate that, by virtue of their competencies and accomplishments to date, they have the potential to assume a senior executive or senior level policy, professional, or technical position in the Federal Government after a relatively brief but intensive period of training and development.

(2) The OPM Director, or the Director's designee, will select Senior Fellow finalists based on an evaluation of each candidate's experience and accomplishments based on his/her application, the results of a structured assessment process, and applying veterans' preference in accordance with part 302 of this chapter.

(i) The OPM Director will appoint a Senior Presidential Management Fellows Selection Committee to oversee the evaluation of Senior Fellow candidates and recommend finalists.

(ii) The Selection Committee will be chaired by a career member of the Senior Executive Service (SES) and may comprise other individuals from within the Federal Government, such as members of the Chief Human Capital Officers Council, as appropriate, and/or others, such as non-Federal employees, when deemed appropriate by the OPM Director.

(3) OPM will notify each individual candidate of his/her selection as a Senior Fellow finalist. OPM will send all participating agencies the list of Senior Fellow finalists for consideration. Agencies may select and appoint a finalist as a Senior Fellow, subject to the application of veterans' preference requirements in part 302 of this chapter.

§ 362.203 Appointment and extensions.

(a) *Appointment.* (1) Except as provided in paragraph (a)(2) of this section, an agency must appoint a Fellow or Senior Fellow using the excepted service appointing authority provided by 5 CFR 213.3102(ii) or (jj), as applicable, of this chapter.

(2) An agency excepted from the competitive service must appoint a Fellow or Senior Fellow under an agency-specific appointing authority.

(3)(i) Fellows are appointed for an initial period of 2 years.

(ii) Upon approval of the agency's ERB, Senior Fellows are appointed for an initial period of up to 2 years, depending on individual qualifications and competencies.

(iii) The OPM Director, or the Director's designee, may approve an extension of a Fellow's or Senior Fellow's appointment for up to 1 additional year upon written request by the chair of the agency's ERB or equivalent; such requests must be received at least 90 days before the end of the initial appointment.

(iv) Agencies may extend, without prior OPM approval, a Fellow's or Senior Fellow's appointment for up to an initial 120 days.

(4) An agency may appoint a Fellow or Senior Fellow any time after the individual has been notified that he/she has been selected as a finalist, but not more than 12 months after the Fellow or Senior Fellow was so selected. However, the OPM Director, or the Director's designee, may approve a written agency request to appoint a Fellow or Senior Fellow after that deadline, so long as the agency request is submitted no later than 30 days prior to the end of the 12-month period.

(5)(i) An agency may not appoint a Fellow or Senior Fellow unless and until he/she has met all graduate degree requirements.

(ii) If a Fellow or Senior Fellow does not complete all degree requirements by August 31 of the year in which the Fellow or Senior Fellow was selected as a finalist, the Fellow's or Senior Fellow's finalist status is terminated.

(b) *Citizenship.* (1) An agency is authorized to appoint a Fellow or Senior Fellow who is not a U.S. citizen only under the following conditions:

(i) The individual is lawfully admitted to the United States as a permanent resident or is otherwise authorized by the Department of Homeland Security's Bureau of Citizenship and Immigration Services to be employed in the U.S.; and

(ii) The agency is authorized to pay the noncitizen under the annual appropriations Act ban or any agency-specific enabling appropriations statute.

(c) *Grade.* (1) An agency must appoint a Fellow at the grade GS–9 level, or its equivalent, at a minimum. However, if the agency determines that a Fellow meets the requisite qualification requirements, the agency may appoint the Fellow at the grade GS–11 or GS–12 level, or their equivalents.

(2) An agency must appoint a Senior Fellow at the grade GS–13 level, or its equivalent, at a minimum. However, if the agency determines that a Senior Fellow meets the requisite qualification requirements (general leadership, managerial, or specialized experience, academic credentials, professional certifications, etc.), the agency may appoint the Senior Fellow at the grade GS–14 or GS–15 level, or their equivalents.

§ 362.204 Development, evaluation, promotion, and certification.

(a) *Individual development plans.* The appointing agency will approve an Individual Development Plan (IDP) for each of its Fellows and Senior Fellows that sets forth the specific developmental activities designed to impart the competencies of the occupation or functional discipline in which the Fellow or Senior Fellow is most likely to be placed. The IDP of a Senior Fellow must be approved by the appointing agency's ERB or equivalent.

(b) *Required developmental activities.* (1) OPM will provide orientation and graduation programs for each class or cohort of Fellows and Senior Fellows, and will provide information on available training opportunities.

(2) The appointing agency will provide each Fellow and Senior Fellow with formal classroom training during the Program:

(i) For each Fellow, the appointing agency will provide a minimum of 80 hours per year of formal classroom training that addresses the core competencies required of the occupation or functional discipline in which the Fellow will most likely be placed upon completion of the program and conversion to a full-time, permanent position.

(ii) For each Senior Fellow, the appointing agency will provide a minimum of 80 hours of formal interagency classroom training provided through an OPM-approved SES candidate development program. The OPM Director, or the Director's

designee, may approve alternative sources of such training.

(3) The appointing agency will assign each Senior Fellow a mentor, who is a member of the SES (or equivalent). The mentor will assist the Senior Fellow in the development of his/her IDP.

(4) The appointing agency will provide each Fellow and Senior Fellow with at least one rotational or developmental assignment with full-time management and/or technical responsibilities consistent with the Fellow's or Senior Fellow's IDP. With respect to this requirement:

(i)(A) Each Fellow must receive at least one developmental assignment of 4 to 6 months in duration in the occupation or functional discipline in which the Fellow will most likely be placed, with full-time management and/or technical responsibilities consistent with the Fellow's IDP.

(B) In addition, the Fellow may receive other short-term rotational assignments of 1 to 6 months in duration, at the appointing agency's discretion, to occupations or functional areas different from the one in which the Fellow will most likely be placed;

(ii) Each Senior Fellow will receive at least one long-term developmental assignment of at least 9 months in duration during which time the Senior Fellow will serve with full responsibilities for accomplishing the duties of that position.

(c) *Performance and progress evaluation.* (1) Each Fellow and Senior Fellow will be placed on a performance plan, as prescribed by part 430 of this chapter or other applicable law or regulation, establishing performance elements and standards that are directly related to acquiring and demonstrating the various leadership, technical, and/or general competencies expected of the Fellow or Senior Fellow as well as the elements and standards established for the duties assigned.

(2) Each Fellow and Senior Fellow must receive an annual performance evaluation in accordance with the agency's performance management program. The rating is derived from an evaluation of the Fellow's or Senior Fellow's success in completing developmental activities designed to prepare the Fellow or Senior Fellow to meet the developmental and performance expectations described in his/her performance plan.

(3) If a Fellow or Senior Fellow does not meet expectations (set forth in the performance plan) with regard to his/her developmental progress or assignments, the agency may take appropriate action.

(d) *Promotion.* (1) An agency must establish policies and criteria for the promotion of Fellows and Senior Fellows. A Fellow may be promoted up to the GS–13 level or its equivalent. A Senior Fellow may be promoted up to the GS–15 level or its equivalent.

(2) Time-in-grade requirements in part 300 of this chapter do not apply to the promotion of Fellows or Senior Fellows while they are appointed under § 213.3102(ii) or (jj) of this chapter.

(e) *Certification of completion.* (1)(i) Upon a Fellow's or Senior Fellow's completion of the Program, the appointing agency's ERB must evaluate each Fellow or Senior Fellow, as applicable, and determine whether it can certify in writing that he/she has met all of the requirements of the Program, including the performance and developmental expectations set forth in the individual's performance plan and IDP, as established by this regulation, and, if so, make that certification. In the event the OPM Director, or the Director's designee, has approved a waiver of one or more of those requirements in a particular case pursuant to § 362.205, the ERB must certify that such a waiver has been granted and that any remaining requirements were met. The mentor may be consulted during this process. Any certifications are forwarded to OPM.

(ii) Once Senior Fellows have been certified by the agency ERB, they are eligible for consideration by the QRB in the same manner as a graduate of an OPM-approved SES candidate development program.

(iii) The agency must complete its evaluation, make a decision regarding certification of successful completion, and notify the Fellow or Senior Fellow, no later than 30 calendar days prior to the expiration of the Fellow's or Senior Fellow's appointment in the Program.

(2)(i) If the ERB decides not to certify a Fellow or Senior Fellow, the Fellow or Senior Fellow may request reconsideration of that determination by the OPM Director, or the Director's designee. Such reconsideration must be requested in writing, with appropriate documentation and justification, within 15 calendar days of the date of the agency's decision.

(ii) The Fellow or Senior Fellow may continue in the Program pending the outcome of his/her request for reconsideration. The agency must continue to provide appropriate developmental activities during this period.

(iii) The OPM Director's, or the Director's designee's, determination in this regard shall be final and not subject to further review or appeal.

§ 362.205 Waiver.

Under limited circumstances, the OPM Director, or the Director's designee, may approve a written request for a waiver of any of the requirements enumerated in this part.

§ 362.206 Movement between departments or agencies.

(a) A Fellow or Senior Fellow may move to another agency at any time during his/her appointment in the Program. To move from one agency to another during the Program, the Fellow or Senior Fellow must separate from the current agency. The new employing agency must appoint the participant without a break in service under the appropriate Fellow or Senior Fellow appointing authority. The gaining agency's ERB must approve the Senior Fellow's appointment for continuation in the Program.

(b) The Fellow or Senior Fellow does not begin a new period in the Program upon appointment by the new employing agency. Because there is no break in service, time served under the previous Program appointment will apply towards the completion of the Program with the new employing agency.

(c) The new appointing agency must notify OPM when a Fellow or Senior Fellow moves to that agency from another agency.

§ 362.207 Withdrawal and readmission.

(a) *Withdrawal.* (1) A Fellow or Senior Fellow may withdraw from the Program at any time by resigning from his/her appointment. Such withdrawal will be treated as a resignation from the Federal service; however, any obligations established upon admission and appointment (for example, as a result of accepting a recruitment bonus under part 575, subpart A, of this chapter) still apply.

(2) A Fellow or Senior Fellow who held a career or career-conditional appointment in an agency immediately before entering the Program, and who withdraws from the Program for reasons that are not related to misconduct, poor performance, or suitability, may, at the employing agency's discretion, be placed in a career or career-conditional position, as appropriate, in that agency. The employing agency's determination in this regard is not subject to appeal.

(3) An agency must notify OPM when a Fellow or Senior Fellow withdraws from the Program.

(b) *Readmission.* (1) If a Fellow or Senior Fellow withdraws from the Program for reasons that are related to misconduct, poor performance, or suitability, as determined by the agency,

he/she will not be readmitted to the Program at any time.

(2) If a Fellow or Senior Fellow withdraws from the Program for reasons that are not related to misconduct, poor performance, or suitability, he/she may petition the employing agency for readmission and reappointment to the Program; such a petition must be in writing and include appropriate justification. Upon consideration of that petition, the agency may, at its discretion, submit a written request seeking OPM approval to readmit and reappoint the individual to the Program; the individual's status in the Program upon readmission and reappointment must be addressed as part of the agency's submission. The OPM Director's, or the Director's designee's, final determination regarding readmission and reappointment is not subject to appeal.

§ 362.208 Resignation, termination, reduction in force, and appeal rights.

(a) *Resignation.* A Fellow or Senior Fellow who resigns at any time prior to completion of the Program does not have reinstatement eligibility for competitive service positions based on his/her Fellow or Senior Fellow appointment.

(b) *Termination.* If an agency does not appoint a Fellow or Senior Fellow at the end of the Program, as provided in § 362.209, or extend the individual's initial appointment under § 362.203, the appointment expires when certification for Program completion is denied or when the OPM Director, or the Director's designee, denies the agency's request for an extension. The agency must provide written notification to OPM when a Fellow or Senior Fellow is terminated for this or any reason.

(c) *Reduction in force.* Fellows and Senior Fellows are in the excepted service Tenure Group II for purposes of § 351.502 of this chapter.

(d) *Appeal rights.* Fellows and Senior Fellows are excepted service employees within the meaning of chapters 43 and 75 in title 5, United States Code, and have appeal rights as provided therein. For systems not covered by 5 U.S.C. chapters 43 or 75, Fellows and Senior Fellows have appeal rights as provided by the equivalent authorities under their system, if any.

§ 362.209 Placement upon completion.

(a) A Fellow or Senior Fellow must complete the Program within the time limits prescribed in § 362.203, including any extensions approved by OPM. At the conclusion of that time period, the Fellow or Senior Fellow must be appointed, as provided in paragraph (b) of this section.

(b)(1) As provided in part 315 of this chapter and/or Executive Order 13318, and except as provided in paragraph (c) of this section, an agency must appoint without further competition an ERB-certified Fellow or Senior Fellow to a full-time, permanent position, in the competitive or excepted service, as applicable. Appointments must be effective on or before the expiration of the individual's PMF appointment, including extensions.

(2) A Fellow or Senior Fellow who was initially appointed to a permanent position in an agency excepted from the competitive service upon completion of the Program may be appointed subsequently to a full-time permanent position in the competitive service without further competition one time only in accordance with the requirements prescribed in § 315.708 and Executive Order 13318.

(c) As provided for in § 362.204(e)(1)(ii), an agency may appoint a Senior Fellow who has been certified as having successfully completed the Senior Fellows program to a position in the SES, without further competition, in the same manner and subject to the same QRB review prescribed in § 317.502 of this chapter as a graduate of an OPM-approved SES candidate development program.

§ 362.210 Transition.

OPM shall provide written guidance for the orderly transition of employees from the Presidential Management Intern Program to the Fellow program and may revise it as necessary.

PART 537—REPAYMENT OF STUDENT LOANS

■ 11. The authority citation for part 537 continues to read as follows:

Authority: 5 U.S.C. 5379.

■ 12. Revise paragraph (d) of § 537.104 to read as follows:

§ 537.104 Employee eligibility.

* * * * *

(d) Employees serving on excepted appointments who are eligible for noncompetitive conversion to a term, career, or career-conditional appointment (including, but not limited to, Career Interns, Presidential Management Fellows, or Senior Presidential Management Fellows).

PART 550—PAY ADMINISTRATION (GENERAL)

Subpart G—Severance Pay

■ 13. The authority citation for subpart G continues to read as follows:

Authority: 5 U.S.C. 5595; E.O. 11257, 3 CFR, 1964–1965 Comp., p. 357.

■ 14. Revise paragraph (f)(6) of the definition of ''*Nonqualifying appointment*'' in § 550.703 to read as follows:

§ 550.703 Definitions.

* * * * *

Nonqualifying appointment * * *

(f) * * *

(6) A Presidential Management Fellow or Senior Presidential Management Fellow appointment under part 362 of this chapter.

* * * * *

[FR Doc. 05–9909 Filed 5–18–05; 8:45 am]

BILLING CODE 6325–39–P

DEPARTMENT OF AGRICULTURE

Agricultural Marketing Service

7 CFR Part 97

[Docket Number ST–02–02]

RIN 0581–AC31

Plant Variety Protection Office, Supplemental Fees

AGENCY: Agricultural Marketing Service, USDA

ACTION: Final rule.

SUMMARY: The Agricultural Marketing Service (AMS) is establishing supplemental fees for the Plant Variety Protection (PVP) Office covering a variety of administrative services that are not currently charged by the program. These include administrative service requests for: Replenishment of seed low in germination or seed number; submission of new application data after notice of allowance, but prior to certificate issuance; recording any revision, withdrawal, or revocation of an assignment; and protest to the issuance of a certificate. The allowance and issuance fee is increased also to recover the costs of enhancing the PVP program's electronic archiving capabilities. Also, technical amendments are made which revise or remove obsolete language.

DATES: Effective June 20, 2005.

FOR FURTHER INFORMATION CONTACT: Janice M. Strachan, USDA, AMS, Science and Technology (S&T), PVP

Office, NAL Building, Room 401, 10301 Baltimore Avenue, Beltsville, MD 20705–2351, telephone 301–504–5518, fax 301–504–5291, and e-mail *Janice.Strachan@usda.gov.*

SUPPLEMENTARY INFORMATION:

I. Executive Order 12866

This rule has been determined to be not significant for the purposes of Executive Order 12866, and therefore, was not reviewed by the Office of Management and Budget (OMB).

II. Regulatory Flexibility Act

Pursuant to requirements set forth in the Regulatory Flexibility Act (RFA) (5 U.S.C. 601 *et seq.*), the AMS has considered the economic impact of this action on small business entities. There are more than 800 potential users of the PVP Office's service, of whom about 100 may file applications in a given year. Some of these users are considered small business entities under the criteria established by the Small Business Administration (13 CFR 121.201). The AMS has determined that this action will not have a significant economic impact on a substantial number of these small business entities.

The PVP Office administers the PVP Act of 1970, as amended (7 U.S.C. 2321 *et seq.*), and issues Certificates of Protection that provide intellectual property rights to developers of new varieties of plants. A Certificate of Protection is awarded to an owner of a variety after examination indicates that the variety is new, distinct from other varieties, genetically uniform, and stable through successive generations. The Act requires that reasonable fees be collected in order to maintain the program. This action establishes new fees charged to users of plant variety protection for administrative services. AMS estimates that the rule will yield an additional $96,000 of new revenue in fiscal year (FY) 2006. The costs to private and public business entities will be proportional to their use of the administrative services. The PVP program is a voluntary service, so any decision by developers to discontinue the use of plant variety protection will not hinder private and public entities from marketing their varieties in commercial markets.

AMS regularly reviews its user-fee-financed programs to determine their fiscal condition. In a recent review of the PVP program, the cost analysis indicated that there are a number of administrative services for which there are no fees established to recover costs. AMS determined the new fees by analyzing the costs for providing the listed services, including salaries and materials. Comments concerning the proposed rule are discussed later in this document.

The PVP Advisory Board has been informed of customer services for which the PVP Office is not reimbursed, and consulted on new supplementary fees in November 2001 and again in March 2003. The Board recommended that new supplemental fees be put in place. This rule makes changes in the regulations to implement the supplemental fees.

Without the supplemental fees in FY 2006, the PVP Office revenues are projected at $1,496,000, operational expenses are estimated at $1,614,720, and trust fund balances would be down to $966,458. On the other hand, if supplemental fees are established, the trust fund balance would be $1,243,658 at the end of FY 2006, which would begin to replenish the program reserves.

III. Civil Justice Reform

This rule was reviewed under Executive Order 12988, Civil Justice Reform. This action is not intended to have retroactive effect, nor will it preempt any State or local laws, regulations, or policies, unless they present an irreconcilable conflict with the rule. There are no administrative procedures that must be exhausted prior to any judicial challenge to the provisions of the rule.

IV. Paperwork Reduction Act

This rule does not contain any information collection or recordkeeping requirements that are subject to the Office of Management and Budget approval under the Paperwork Reduction Act of 1995 (44 U.S.C. Chapter 35).

The current information collection and recordkeeping requirements in part 97 were previously approved under OMB control No. 0581–0055.

Background Information

The PVP program is a voluntary, user-fee-funded service, conducted under the Authority of the PVP Act (7 U.S.C. 2321 *et seq.*) of 1970, as amended. The Act authorizes the Secretary of Agriculture to provide intellectual property rights that facilitate marketing of new varieties of seed-reproduced or tuber-propagated plants. The Act also requires that reasonable fees be collected from the users of the services to cover the costs of maintaining the program.

This rule amends the current fee schedule to cover a variety of administrative services for which users are not being charged by the program. These include administrative service requests for replenishment of seed low in germination or seed number; submission of new application data after notice of allowance, but prior to certificate issuance; revocation of authorization or change of address on assignments, security interests, licenses, grants, or conveyances; recording of withdrawal from assignments, security interests, licenses, grants, or conveyances; and protest to the issuance of a certificate. In addition, the allowance and issuance fee is increased by $250 to recover the costs of improving the PVP program's electronic archiving capabilities.

On January 10, 2003, AMS published a rule in the **Federal Register** (68 FR 1359) that increased PVP fees and that became effective February 10, 2003. In that rule, the fees were revised to take into account that from 1995 through 2002, the PVP Office absorbed accumulated national and locality salary increases for Federal employees. The fees in this rule will yield an estimated $96,000 of additional revenue.

The PVP Advisory Board has been informed of customer services for which the PVP Office is not reimbursed, and consulted on new supplementary fees in November 2001 and again in March 2003. The Board recommended that new supplemental fees be put in place. This rule makes changes in the regulations to implement these new supplemental fees.

This rule amends § 97.2 by updating the definition of the term ''Plant Variety Protection Office'' by noting that the Office is part of the Agricultural Marketing Service's Science and Technology Programs. The definition of the term ''owner'' also is clarified by specifying that the owner is the person who developed or discovered and developed a variety, or the breeder's successor, as the PVP Act provides.

The address of the PVP Office is given in § 97.5(c). This rule updates the address of the Office.

Section 97.6(d)(1) is amended by adding a replenishment fee for restocking the voucher seed sample. Seeds need to be replenished when the germination rate falls below 85%. The germination rate is tested periodically and these tests use up the stored seed sample. The voucher seed sample is a supplement to the Exhibit C description of the variety and is kept for the life of the certificate. Failure to replenish the voucher seed sample results in cancellation of the certificate.

Section § 97.6(d) provides that a viable seed sample shall be submitted with the application. For tuber propagated varieties, the applicant must verify that a viable cell culture has been deposited in an approved public

depository, and for hybrids from self-incompatible parents, verification that a plot of vegetative material for each parent has been established in an approved public depository.

Because of the expense of depositing cell cultures and because cell cultures are not useful in the examination process, the PVP Office has granted exceptions to applicants so that the cell culture need not be deposited until the examination has been completed. This rule regularizes this practice by providing that applicants declare that the cell culture will be deposited. A similar change is made for the establishment of plots of vegetative material for self-incompatible parents of hybrids.

There are instances where it is impractical or impossible for the applicant to submit a sample of viable seeds with the application. For example, requirements for phytosanitary certificates for the importation of seed could delay the submission of a sample until the variety would no longer be eligible for protection. Accordingly, the rule allows a waiver of the requirement that the sample be submitted at the time of the application; but this is not intended to operate so that the certificate could be obtained without submitting the seed sample.

Section 97.158 prohibits, with limited exceptions, advertising by attorneys and other persons practicing before the PVPO. Although the prohibition of advertising by attorneys was once standard, this is no longer the case. Accordingly, the provisions are removed.

The provision for priority contests, §§ 97.205 through 97.222, are obsolete and are removed, together with references to those provisions in other sections. When the same variety is independently developed by different parties, the right of priority for a certificate of protection is determined by filing date. Prior to amendment of the PVP Act in 1994, the right of priority was controlled by the date of determination of the variety. Because applications pending at the time of the amendment of the PVP Act continued to be governed by the old provisions, it was necessary to leave the priority contest regulations in place for a transition period. There are no longer any pending applications to which the priority contest procedure could be applied. All other references to priority contests also are removed.

Section 97.175 is revised by adding new supplemental fees, and incorporating language to the present fee schedule to recover the costs of administrative service requests for: Replenishment of seed low in germination or seed number; submission of new application data after notice of allowance, but prior to certificate issuance; revocation of authorization, change of address, or recording of withdrawal from assignments, security interests, licenses, grants, or conveyances; and protest to the issuance of a certificate.

Finally, the authority citation for part 97 is revised to remove a reference to an obsolete statutory provision.

Summary of Public Comment

A notice of the proposed rule was published in the **Federal Register** (70 FR 1835) on January 11, 2005. A 30-day comment period was provided to allow interested persons the opportunity to respond to the proposal, including any regulatory and informational impact of this action on organizations considered small businesses. The comment period expired on February 10, 2005, and four comments were received on the proposed rule.

Three comments were received which expressed concern about the impact of the supplemental fees on small businesses. Only one new fee will be routinely charged. That is the additional fee to recover the costs of improving electronic archiving capabilities, which service is frequently requested by users. This $250 fee will be added to the allowance and issuance fee since only issued certificates are open to public access. All other fees are paid only if the user requests that the service be performed. It is expected that these fees will be assessed very infrequently based on past requests for these types of services. When these fees were set, the salary costs and time needed to perform the services were considered. In accordance with the PVP Act, new supplemental fees are reasonable and will allow the PVP program to recover the actual costs of performing the requested services. The costs to small businesses should be proportional to their use of the services. It is necessary that the program recover the costs of services. Accordingly, no changes are made based on these comments.

Finally, one comment was received from an individual who had concerns about Invasive Species, a program that is not administered by the PVP Office.

List of Subjects in 7 CFR Part 97

Plants, Seeds.

■ For reasons set forth in the preamble, 7 CFR part 97 is amended as follows.

PART 97—PLANT VARIETY PROTECTION

■ 1. The authority citation for part 97 is revised to read as follows:

Authority: Plant Variety Protection Act, as amended, 7 U.S.C. 2321 *et seq.*

§ 97.2 [Amended]

■ 2. Section 97.2 is amended by:

■ a. Revising the word ''Division'' to read ''Programs'' in the definition of the term *Office or Plant Variety Protection Office.*

■ b. Adding the words ''and developed'' after the word ''discovered'' in the definition of term *Owner*.

■ 3. In § 97.5, paragraph (c) is revised to read as follows:

§ 97.5 General requirements.

* * * * *

(c) Application and exhibit forms shall be issued by the Commissioner. (Copies of the forms may be obtained from the Plant Variety Protection Office, National Agricultural Library, Room 401, 10301 Baltimore Avenue, Beltsville, MD 20705–2351).

* * * * *

§ 97.6 [Amended]

■ 4. Section 97.6 is amended by:

■ a. Adding the words '', unless a waiver has been granted for good cause'' immediately following the word ''variety'' in paragraph (d)(1).

■ b. Removing the words ''verification that a viable cell culture has been deposited'' and adding the words ''a declaration that a viable cell culture will be deposited'' in their place in paragraph (d)(2).

■ c. Removing the words ''verification that a plot of vegetable material for each parent has been established'' and adding the words ''a declaration that a plot of vegetative material for each parent will be established'' in their place in paragraph (d)(3).

§ 97.104 [Amended]

■ 5. In § 97.104, paragraph (b) the words ''and shall pay the handling fee for replenishment'' are added following the words ''sample of the variety''.

§ 97.107 [Amended]

■ 6. § 97.107, the words ''within 60 days from the date of denial, in accordance with §§ 97.300–97.303'' are removed.

§ 97.108 [Amended]

■ 7. In § 97.108, paragraph (b) the words ''to carry into effect a recommendation under § 97.302(b)'' are removed and the words ''in accordance with the decision'' are added in their place.

§ 97.158 [Removed]

■ 8. Section 97.158 is removed.

■ 9. Section 97.175 is revised to read as follows:

§ 97.175 Fees and charges.

(a) Filing the application and notifying the public of filing—$432.00..

(b) Search or examination—$3,220.00.

(c) Submission of new application data, after notice of allowance, prior to issuance of certificate—$432.00.

(d) Allowance and issuance of certificate and notifying public of issuance—$682.00.

(e) Revive an abandoned application—$432.00.

(f) Reproduction of records, drawings, certificates, exhibits, or printed material (copy per page of material)—$1.50.

(g) Authentication (each page)—$1.50.

(h) Correcting or re-issuance of a certificate—$432.00

(i) Recording an assignment, any revision of an assignment, or withdrawal or revocation of an assignment (per certificate or application)—$38.00.

(j) Copies of 8 x 10 photographs in color—$38.00.

(k) Additional fee for reconsideration—$432.00.

(l) Additional fee for late payment—$38.00.

(m) Fee for handling replenishment seed sample (applicable only for certificates issued after June 20, 2005)—$38.00.

(n) Additional fee for late replenishment of seed—$38.00.

(o) Filing a petition for protest proceeding—$4,118.00.

(p) Appeal to Secretary (refundable if appeal overturns the Commissioner's decision)—$4,118.00.

(q) Granting of extensions for responding to a request—$74.00.

(r) Field inspections or other services requiring travel by a representative of the Plant Variety Protection Office, made at the request of the applicant, shall be reimbursable in full (including travel, per diem or subsistence, salary, and administrative costs) in accordance with Standardized Government Travel Regulation.

(s) Any other service not covered in this section will be charged for at rates prescribed by the Commissioner, but in no event shall they exceed $89.00 per employee-hour. Charges also will be made for materials, space, and administrative costs.

§§ 97.205–97.222 [Removed]

■ 10. Sections 97.205 through 97.222 are removed.

Dated: May 13, 2005.

Kenneth C. Clayton,

Acting Administrator, Agricultural Marketing Service.

[FR Doc. 05–9963 Filed 5–18–05; 8:45 am]

BILLING CODE 3410–02–P

DEPARTMENT OF AGRICULTURE

Rural Utilities Service

7 CFR Part 1776

RIN 0572–AC00

Household Water Well System Grant Program

AGENCY: Rural Utilities Service, USDA.

ACTION: Final rule.

SUMMARY: The Rural Utilities Service (RUS) issues regulations to establish the Household Water Well System (HWWS) Program. This action establishes a grant program as authorized by Section 306E of the Consolidated Farm and Rural Development Act (CONACT). The HWWS Program will provide grants to private non-profit organizations, which, in turn, will use the funds to set up a loan program, making loans to eligible individuals for household water well systems. Eligible individuals may use the loans to construct, refurbish, and service individual household water well systems that they own or will own in rural areas. Additionally, the rule outlines the process by which applicants can apply for the program and describes how RUS will administer the grant program.

DATES: This rule will become effective June 20, 2005.

FOR FURTHER INFORMATION CONTACT: Cheryl Francis, Loan Specialist, Water Programs Division, Rural Utilities Service, U.S. Department of Agriculture, 1400 Independence Avenue, SW., Room 2239–S, Stop 1570, Washington, DC 20250–1570. Telephone (202) 720–1937. E-mail: *Cheryl.Francis@usda.gov.*

SUPPLEMENTARY INFORMATION:

Executive Order 12866

This final rule has been determined to be not significant under Executive Order 12866, Regulatory Planning and Review. Therefore, it has not been reviewed by the Office of Management and Budget (OMB).

Executive Order 12372

This program is not subject to the requirements of Executive Order 12372, ''Intergovernmental Review of Federal Programs,'' as implemented under USDA's regulations at 7 CFR part 3015.

Executive Order 12988

This rule has been reviewed under Executive Order 12988, Civil Justice Reform. RUS has determined that this rule meets the applicable standards provided in section 3 of the Executive Order. In accordance with the Executive Order and the rule: (1) All state and local laws and regulations that are in conflict with this rule will be preempted; (2) no retroactive effect will be given to the rule; and (3) administrative appeal procedures, if any, must be exhausted before litigation against the Department or its agencies may be initiated in accordance with section 212(e) of the Department of Agriculture Reorganization Act of 1994 (7 U.S.C. 6912).

Regulatory Flexibility Act Certification

It has been determined that the Regulatory Flexibility Act is not applicable to this rule since the Rural Utilities Service is not required by 5 U.S.C. 551 *et seq.* or any other provision of the law to publish a notice of final rule making with respect to the subject matter of this rule.

Information Collection and Recordkeeping Requirements

The information collection and recordkeeping requirements contained in this rule have been cleared under OMB control number 0572–0139 in accordance with the Paperwork Reduction Act of 1995 (44 U.S.C. chapter 35).

National Environmental Policy Act Certification

The Administrator of RUS has determined that this rule will not significantly affect the quality of the human environment as defined by the National Environmental Policy Act of 1969 (42 U.S.C. 4321 *et seq.*). Therefore, this action does not require an environmental impact statement or assessment.

Catalog of Federal Domestic Assistance

The program described by this rule is listed in the Catalog of Federal Domestic Assistance Programs under number 10.862. This catalog is available electronically through the free CFDA website on the Internet at *http://www.cfda.gov.* The print edition may be purchased by calling the Superintendent of Documents at 202–512–1800 or toll free at 866–512–1800, or ordering it online at *http://bookstore.gpo.gov.*

Unfunded Mandates

This rule contains no Federal mandates (under the regulatory

provision of Title II of the Unfunded Mandates Reform Act of 1995) for State, local, and tribal governments or the private sector. Thus, this rule is not subject to the requirements of section 202 and 205 of the Unfunded Mandates Reform Act of 1995.

Executive Order 13132, Federalism

The policies contained in this rule do not have any substantial direct effect on states, on the relationship between the national government and the states, or on the distribution of power and responsibilities among the various levels of government. Nor does this rule impose substantial direct compliance costs on state and local governments. Therefore, consultation with states is not required.

Background

On May 13, 2002, the Farm Security and Rural Investment Act of 2002 (Farm Bill) was signed into law as Public Law 107–171. Section 6012 of the Farm Bill amended the CONACT by adding a grant program of which the proceeds would be used to establish a lending program. Under the Household Water Well System Program, the Secretary may make grants to private non-profit organizations to establish a revolving loan program. Loans may be made to eligible individuals to construct, refurbish, and service individual household water well systems that they own or will own in rural areas. The loans will be serviced through the USDA Centralized Servicing Center to enhance standardized servicing and minimize related servicing fees.

The CONACT defines an ''eligible individual'' to mean ''an individual who is a member of a household the members of which have a combined income (for the most recent 12-month period for which the information is available) that is not more than 100 percent of the median nonmetropolitan household income for the State or territory in which the individual resides, according to the most recent decennial census of the United States.''

This program is authorized to be appropriated $10,000,000 for each of the fiscal years (FY) 2003 through 2007. There was no funding appropriated in FY 2003, but $1,000,000 was appropriated in each fiscal year 2004 and 2005. The appropriations were authorized by the Consolidated Appropriations Act, 2004, Public Law 108–199 (Jan. 23, 2004; 118 Stat.3); and the Consolidated Appropriations Act, 2005, Public Law 108–447 (Dec. 8, 2004, 118 Stat. 2809).

To reduce duplicative promulgation of specific rules regarding grants and loans hereunder, RUS has referenced existing USDA rules to the extent practicable, including references to specific regulations and standard forms.

RUS published a notice of inquiry, requesting comments on the grant program, in the **Federal Register** on February 10, 2004 (69 FR 6251). It published regulations for the HWWS Program in a direct final rule on October 6, 2004 (69 FR 59764). The direct final rule would have been effective on November 22, 2004. However, since RUS received written adverse comments by November 5, 2004, the rule was withdrawn. RUS published a notice of withdrawal in the **Federal Register** on November 17, 2004 (69 FR 67263). Based on the parallel proposed rule also published on October 6, 2004 (69 FR 59836), RUS stated that it would publish this final rule and address the adverse comments made. RUS will not institute a second comment period on this action.

The adverse comments primarily challenged the program's matching or cost sharing requirements and the agency's position to not permit in-kind contributions to count towards satisfying the requirements. The following paragraphs briefly summarize and respond to the comments received.

Comment: Either eliminate the requirement that grant applicants must provide matching funds in order to be considered eligible for consideration or modify the requirement.

Response: A matching requirement is in the best interests of the HWWS program. It is an essential support mechanism in establishing the loan program. A cash match combined with the HWWS grant will make more funds available to start up the revolving loan fund so that a greater number of rural residents may benefit from the program. RUS has lowered the minimum eligibility percentage from 26 percent to 10 percent of the total project costs. Any applicant that does not offer at least a 10 percent match will be ineligible for the HWWS Program.

Comment: Eliminate the 26 percent match requirement for eligibility and establish a new scale to award priority points for matching funds as one criterion to consider in selecting grant recipients.

Response: The minimum level of matching funds for which an applicant receives priority points has been revised downward to 10 percent. Compared to the minimum matching levels of other Rural Development programs which range from 5 to 20 percent, the level is reasonable. The smaller percentage will allow small non-profits to compete with large national non-profit organizations. The priority points will be awarded as follows:

Revised regulation		Withdrawn regulation	
Percentages	Points	Percentages	Points
0–9	(1)	0–24	(1)
10–25	5	26–30	5
26–30	10	31–50	10
31–50	15	51 or more	20
51 or more	20		

[1]Ineligible.

Comment: Permit in-kind contributions to qualify as matching funds and broadly define them.

Response: The RUS water and waste programs that use in-kind contributions to supplement federal funds are technical assistance programs that do not have a revolving loan fund component to them. The thrust of the HWWS Program is to provide low interest loans to the greatest number of eligible individuals possible, using a grant recipient as an intermediary for the loans. The most effective way to realize that goal is to have a revolving loan fund that is capitalized with as much money as possible. Consequently, RUS is requiring a matching cash contribution, which may include funds contributed by grant recipients, funds donated from third parties, or other federal grant funds specifically authorized by law to be used to match funds. In-kind contributions will not be considered in satisfying the HWWS Program's matching requirement. This policy is in line with other Rural

Development programs that feature a re-lending program but do not allow in-kind contributions as a matching requirement.

Comment: Allow the grant recipient discretion in the use of matching funds. The requirement that each loan recipient's project be made up of HWWS grant funds and matching funds should be changed. HWWS grant funds and any matching funds should go into the revolving loan fund and that fund should be used to issue loans and to pay for administrative costs related to the HWWS purpose, without distinction as to whether those payments are from HWWS grant or matching funds.

Response: The grant recipient has discretion in using matching funds the same as federal funds as long as they are for authorized grant purposes. Authorized grant purposes include establishing a loan program for household water well systems, making loans to eligible well owners, and paying for administrative expenses related to operating the loan program. The expenses must be allowable costs in accordance with federal cost principles. There is no requirement that an individual loan recipient's project be made up entirely of HWWS grant funds and matching funds.

Grant funds and matching funds must be placed into the revolving loan fund. The recipient may transfer additional assets into the fund where they would become part of the fund and be available for authorized grant purposes. Loans may be made and the administrative expenses may be paid from the revolving loan fund as authorized grant purposes. As long as any part of the HWWS grant remains available for lending and loans made from the revolving loan fund have an outstanding balance, the grant recipient must use funds in the revolving loan fund for authorized grant purposes.

Comment: Maintain the character of purpose of the revolved funds.

Response: The HWWS regulation places enough controls on the revolved funds so that they are not subject to non-programmatic uses. First, section 1776.17(g) states that the revolved funds are a part of the revolving loan fund. Second, under section 1776.17(h), the revolved funds would be used for authorized purposes before any grant funds that might be in the revolving loan fund would be used. Third, section 1776.17(k), requires that cash in the revolving fund from any source must be available for additional loans if the cash is not required for debt service, approved administrative costs, or reasonable reserves. Since the revolved funds would be repayments of loans and the loans would have a balance, any funds in the revolving loan fund must be used for programmatic purposes in accordance with the opening paragraph of section 1776.17.

Comment: Delay application process until the final rule is revised to reflect the above comments, and start a new application process based on the revised rule.

Response: Because the direct final rule was withdrawn, the deadline for the application process was extended until a final rule is published. A new deadline will be set at the time of publication.

List of Subjects in 7 CFR Part 1776

Agriculture, Community development, Community facilities, Credit, Grant programs—housing and community development, Nonprofit organizations, Reporting and recordkeeping requirements, Rural areas, Waste treatment and disposal, Water pollution control, Water resources, Water supply, Watersheds.

■ For reasons set forth in the preamble, RUS amends 7 CFR chapter XVII of Title 7 of the Code of Federal Regulations by adding a new part 1776 to read as follows:

PART 1776—HOUSEHOLD WATER WELL SYSTEM GRANT PROGRAM

Subpart A—General

Sec.
1776.1 Purpose.
1776.2 Uniform Federal Assistance Provisions.
1776.3 Definitions.
1776.4 [Reserved]

Subpart B—HWWS Grants

1776.5 Eligibility to receive a HWWS grant.
1776.6 Notice of availability of funds.
1776.7 HWWS grant application process.
1776.8 Methods for submitting applications.
1776.9 Scoring applications.
1776.10 Grant agreement.
1776.11 Revolving loan fund.
1776.12 Use of HWWS grant proceeds.
1776.13 Administrative expenses.

Subpart C—HWWS Loans

1776.14 Eligibility to receive a HWWS loan.
1776.15 Terms of loans.
1776.16 Loan servicing.
1776.17 Revolving loan fund maintenance.

Authority: 7 U.S.C. 1926e.

Subpart A—General

§ 1776.1 Purpose.

This part sets forth the policies and procedures for making grants to private, non-profit organizations to finance the construction, refurbishing and servicing of individually-owned household water well systems in rural areas for individuals with low or moderate income.

§ 1776.2 Uniform Federal Assistance Provisions.

(a) This program is subject to the general provisions that apply to all grants made by USDA and that are set forth in 7 CFR Part 3015—Uniform Federal Assistance Regulations.

(b) This program is subject to the uniform administrative requirements that apply to all grants made by USDA to non-profit organizations and that are set forth in 7 CFR Part 3019—Uniform Administrative Requirements for Grants And Agreements with Institutions of Higher Education, Hospitals, and Other Non-Profit Organizations.

(c) This program is subject to OMB Circular No. A–122 (Revised): Cost Principles for Non-Profit Organizations.

§ 1776.3 Definitions.

Administrative expenses means expenses incurred by a grant recipient that are of the type more particularly described in Section 13 of this part.

Applicant means a private, non-profit organization that applies for a HWWS grant under this part.

Centralized Servicing Center (CSC) means the centralized loan servicing center within the United States Department of Agriculture, Rural Development. CSC provides nationwide services for borrowers that have received financing from Rural Development programs.

Construction means building or assembling a water well system or portion thereof, that is not a water well system or portion thereof being constructed in connection with a new building.

Eligible individual means an individual who is a member of a household the members of which have a combined income (for the most recent 12-month period for which the information is available) that is not more than 100 percent of the median nonmetropolitan household income for the State or territory in which the individual resides, according to the most recent decennial census of the United States.

Grant agreement means the contract between RUS and the grant recipient which sets forth the terms and conditions governing a particular grant awarded under this part.

Grant recipient means an applicant that has been awarded a HWWS grant under this part.

HWWS means household water well system.

HWWS grant means a grant awarded by RUS to a grant recipient under this part.

HWWS loan means a loan made by a grant recipient to a loan recipient using the direct or indirect proceeds of a HWWS grant awarded under this part.

Loan recipient means an eligible individual who has received a HWWS loan.

Refurbishing means to renovate or to restore a water well system or portion thereof to near new condition.

Revolved funds means the cash portion of the revolving loan fund that is not composed of HWWS grant funds, including repayments of revolving HWWS loans, fees, and interest collected on HWWS loans.

Revolving loan fund means the loan fund established by the grant recipient to carry out the purposes of this part, such fund comprising the proceeds of a HWWS grant and other related assets.

Rural area means any area other than a city or town that has a population of greater than 50,000 inhabitants; and the urbanized area contiguous and adjacent to such city or town.

RUS means the Rural Utilities Service, a Federal agency delivering the United States Department of Agriculture's Rural Development Utilities Program.

Servicing means making repairs or performing maintenance on a water well system or portion thereof.

USDA means the United States Department of Agriculture.

§ 1776.4 [Reserved]

Subpart B—HWWS Grants

§ 1776.5 Eligibility to receive a HWWS grant.

(a) The applicant must be a private organization.

(b) The applicant must be organized as a non-profit organization.

(c) The applicant must have legal capacity and lawful authority to perform the obligations of a grant recipient under this part. Example 1: If the organization is incorporated as a non-profit corporation, it must have corporate authority under state law and its corporate charter to engage in the practice of making loans to individuals. Example 2: if the organization is an unincorporated association, state law may prevent the organization from entering into binding contracts, such as a grant agreement.

(d) The applicant must have sufficient expertise and experience in lending and in promoting the safe and productive use of individually-owned household water well systems and ground water to assure the likelihood that the objectives of this part can be achieved.

§ 1776.6 Notice of availability of funds.

(a) In Fiscal Year 2005, applications will be accepted for this program from May 19, 2005, until July 18, 2005, at which time the application period will close. An applicant may withdraw, substitute, amend or supplement its application at any time before the application period closes. Once the application period has closed, all applications will be final.

(b) For subsequent fiscal years, if any funds for this program are available, the Secretary will publish a notice to that effect. The notice will establish the period during which applications for such funds may be submitted for consideration.

§ 1776.7 HWWS Grant application process.

(a) The applicant must complete and submit the following standard forms to RUS to apply for a HWWS grant under this part:

(1) Application for Federal Assistance: *Standard Form 424,*

(2) Budget Information—Non-Construction Programs: *Standard Form 424A,* and

(3) Assurances—Non-Construction Programs: *Standard Form 424B.*

(b) The applicant must submit a written work plan that demonstrates the feasibility of the applicant's lending program to meet the objectives of this part.

(c) The applicant should submit a narrative establishing the basis for any claims that it has substantial expertise in promoting the safe and productive use of individually-owned household water well systems. The Secretary will give priority to an applicant that demonstrates it has substantial experience of this type.

(d) The applicant must submit:

(1) A pro forma balance sheet at start-up and projected balance sheets for at least three additional years,

(2) Financial statements for the last three years, or from inception of the operations of the grant recipient if less than three years, and

(3) Projected cash flow and earnings statements for at least three years, supported by a list of assumptions showing the basis for the projections. The projected earnings statement and balance sheets must include one set of projections specific to the revolving loan fund, and a separate set of projections that detail the proposed applicant organization's total operations.

(e) The applicant may submit such additional information as it elects to support and describe its plan for achieving the objectives of this part.

§ 1776.8 Methods for submitting applications.

(a) Applications may be filed in either paper or electronic format. RUS will not accept applications by fax or e-mail.

(b) Paper applications for HWWS grants may be delivered by the U.S. Postal Service (USPS) or courier delivery services. Applications submitted by mail or courier must be postmarked no later than the filing deadline to be considered for the grant period. Applications delivered by mail or courier must be addressed to the attention of the Assistant Administrator, Water and Environmental Programs as follows: ATTN: Assistant Administrator, WEP, Rural Utilities Service, Stop 1548 Room 5145 South, 1400 Independence Ave. SW., Washington, DC 20250–1548.

(c) Electronic applications may be filed through Grants.gov, the official Federal Government Web site at *http://www.grants.gov.* The applicant must be registered with Grants.gov before they can submit a grant applicant. The applicant should refer to instructions found on the Grants.gov Web site for procedures for registering and using this facility. An applicant who is not registered on Grants.gov should allow a sufficient number of business days to complete the process. Applications submitted electronically must be show an electronic date and time stamp on or before the filing deadline to be considered for the grant period.

(d) The methods of submitting applications may be changed from time to reflect changes in addresses and electronic submission procedures. The applicant should refer to the most recent notice of funding availability for notice of any such changes. In the event of any discrepancy, the notice must be followed.

§ 1776.9 Scoring applications.

(a) Applications that are incomplete or ineligible will be returned to the applicant, accompanied by a statement explaining why the application is being returned.

(b) Promptly after an application period closes, all applications that are complete and eligible will be ranked competitively based on the following scoring criteria:

(1) Degree of expertise and experience in promoting the safe and productive use of individually-owned household water well systems and ground water. Up to 30 points

(2) Degree of expertise and successful experience in making and servicing loans to individuals. Up to 20 points

(3) Percentage of applicant contributions. Points allowed under this paragraph will be based on written

evidence of the availability of funds from sources other than the proceeds of a HWWS grant to pay part of the cost of a loan recipient's project. In-kind contributions will not be considered. Funds from other sources as a percentage of the HWWS grant and points corresponding to such percentages are as follows:

(i) 0 to 9 percent—ineligible;

(ii) 10 to 25 percent—5 points;

(iii) 26 to 30 percent—10 points;

(iv) 31 to 50 percent—15 points; and

(v) 51 percent or more—20 points

(4) Extent to which the work plan demonstrates a well thought out, comprehensive approach to accomplishing the objectives of this part, clearly defines who will be served by the project, and appears likely to be sustainable. Up to 20 points

(5) Extent to which the goals and objectives are clearly defined, tied to the work plan, and measurable. Up to 10 points

(6) Lowest ratio of projected administrative expenses to loans advanced. 10 points

(7) Administrator's discretion, considering such factors as creative outreach ideas for marketing HWWS loans to rural residents, the amount of funds requested in relation to the amount of needs demonstrated in the work plan, previous experiences demonstrating excellent utilization of a revolving loan fund grant, and optimizing the use of agency resources. Up to 10 points

(c) All qualifying applications under this part will be scored based on the criteria contained in this section. Awards will be made based on the highest ranking applications and the amount of financial assistance available for HWWS grants. All applicants will be notified in writing of the score each application receives.

§ 1776.10 Grant agreement.

RUS and the grant recipient will enter into an agreement setting forth the terms and conditions governing a particular HWWS grant award. RUS will furnish the form of grant agreement. No funds awarded under this part shall be disbursed to the grant recipient before the grant agreement is binding and RUS has received a fully executed counterpart of the grant agreement.

§ 1776.11 Revolving loan fund.

The grant recipient shall establish and maintain a revolving loan fund for the purposes set forth in § 1776.12. All loans made to loan recipients shall be drawn from the revolving loan fund. The loans shall be serviced, and the revolving loan fund shall be maintained, as set forth in § 1776.17.

§ 1776.12 Use of HWWS grant proceeds.

(a) Except as otherwise provided in the next paragraph, HWWS grant proceeds shall be used solely for the purpose of providing loans to eligible individuals for the construction, refurbishing, and servicing of individual household water well systems in rural areas that are or will be owned by the eligible individuals.

(b) A grant recipient may use HWWS grant funds to pay administrative expenses associated with providing the assistance described in the immediately preceding paragraph.

(c) A grant recipient may not use grant funds in any manner inconsistent with the terms of the grant agreement.

§ 1776.13 Administrative expenses.

(a) Subject to the limitations provided in paragraphs (b), (c) and (d) of this section, the grant recipient may use grant funds to pay administrative expenses associated with providing HWWS loans.

(b) Administrative expenses incurred in any calendar year which exceed 10 percent of the HWWS loans made by the grant recipient during that same period do not qualify for reimbursement.

(c) Administrative expenses incurred prior to the execution of the grant agreement by RUS do not qualify for reimbursement.

(d) Allowability of administrative expense costs shall be determined in accordance with 7 CFR 3019.27.

Subpart C—HWWS Loans

§ 1776.14 Eligibility to receive a HWWS loan.

(a) The loan recipient must be an eligible individual.

(b) The loan recipient must either own and occupy the home being improved with the proceeds of the HWWS loan, or be occupying the home as the purchaser under a legally enforceable land purchase contract which is not in default by either the seller or the purchaser.

(c) The home using the water well system being funded from proceeds of the HWWS loan must be located in a rural area.

(d) The water well system being funded from the proceeds of the HWWS loan may not be associated with the construction of a new dwelling.

(e) The water well system being funded from the proceeds of the HWWS loan may not be used to substitute for water service available from collective water systems. Example: Loan recipient wishes to restore an old well which had been abandoned when the dwelling was connected to a water line belonging to a water district.

(f) A loan recipient must not be suspended or debarred from participation in Federal programs.

§ 1776.15 Terms of loans.

(a) HWWS loans under this part—

(1) Shall have an interest rate of 1 percent;

(2) Shall have a term not to exceed 20 years; and

(3) Shall not exceed $8,000 for each household water well system.

(b) The grant recipient must set forth the HWWS loan terms in written documentation signed by the loan recipient.

(c) Grant recipients must develop and use HWWS loan documentation that conforms to the terms of this part, the grant agreement, and the laws of the state or states having jurisdiction.

§ 1776.16 Loan servicing.

(a) If RUS determines that HWWS loans may be serviced by CSC, then the grant recipient will enter into an agreement with the Centralized Servicing Center for servicing all HWWS loans made from the revolving loan fund. All HWWS loan payments will be received by and processed at the Centralized Servicing Center. The grant recipient will be charged a fee for this service, and such fee should be included in the projected financial statements and work plan submitted as part of the grant application. This fee may be reimbursed as an administrative expense as provided in § 1776.13.

(b) If RUS determines that CSC is not able to service HWWS loans, then the grant recipient shall be responsible for servicing, or causing to be serviced, all HWWS loans. Servicing will include preparing loan agreements, processing loan payments, reviewing financial statements and debt reserves balances, and other responsibilities such as enforcement of loan terms. Loan servicing will be in accordance with the work plan RUS approved when the grant was awarded. It will continue as long as any loan made in whole or in part with RUS grant funds is outstanding.

§ 1776.17 Revolving loan fund maintenance.

As long as any part of the HWWS grant remains available for lending, and loans made from the revolving loan fund have an outstanding balance due, the grant recipient must maintain the revolving loan fund for the purposes set forth in § 1776.13.

(a) All HWWS grant funds received by a grant recipient must be deposited into the revolving loan fund.

(b) The grant recipient may transfer additional assets into the revolving loan fund.

(c) All cash and other assets of the revolving loan fund shall be deposited in a separate bank account or accounts.

(d) No cash or other assets of any other fund maintained by the grant recipient shall be commingled with the cash and other assets of the revolving loan fund.

(e) All moneys deposited in such bank account or accounts shall be money of the revolving loan fund.

(f) Loans to loan recipients are advanced from the revolving loan fund.

(g) The revolving loan fund will consist of receivables created by making loans, the grant recipient's security interest in collateral pledged by loan recipients, collections on the receivables, interest, fees, and any other income or assets derived from the operation of the revolving loan fund.

(h) The portion of the revolving loan fund that consists of HWWS grant funds, on a last-in-first-out basis, may be used for only those purposes set forth in this part.

(i) The grant recipient must submit an annual budget of proposed administrative costs for RUS approval. The amount removed from the revolving loan fund for administrative costs in any year must be reasonable; must not exceed the actual cost of operating the revolving loan fund, including loan servicing and providing technical assistance; and must not exceed the amount approved by RUS in the grant recipient's annual budget.

(j) A reasonable amount of revolved funds must be used to create a reserve for bad debts. Reserves should be accumulated over a period of years. The total amount should not exceed maximum expected losses, considering the quality of the grant recipient's portfolio of loans. Unless the grant recipient provides loss and delinquency records that, in the opinion of RUS, justifies different amounts, a reserve for bad debts of 6 percent of outstanding loans must be accumulated over three years and then maintained as set forth in the grant agreement.

(k) Any cash in the revolving loan fund from any source that is not needed for debt service, approved administrative costs, or reasonable reserves must be available for additional loans to loan recipients.

(l) All reserves and other cash in the revolving loan fund not immediately needed for loans to loan recipients or other authorized uses must be deposited in accounts in banks or other financial institutions. Such accounts must be fully covered by Federal deposit insurance or fully collateralized with U.S. Government obligations, and must be interest bearing. Any interest earned thereon remains a part of the revolving loan fund.

Dated: May 12, 2005.

Curtis M. Anderson,

Acting Administrator, Rural Utilities Service.

[FR Doc. 05–10003 Filed 5–18–05; 8:45 am]

BILLING CODE 3410–15–P

DEPARTMENT OF TRANSPORTATION

Federal Aviation Administration

14 CFR Part 39

[Docket No. FAA–2005–21155; Directorate Identifier 2005–NE–14–AD; Amendment 39–14099; AD 2005–09–51]

RIN 2120–AA64

Airworthiness Directives; Turbomeca Arrius 2F Turboshaft Engines

AGENCY: Federal Aviation Administration (FAA), DOT.

ACTION: Final rule; request for comments.

SUMMARY: This document publishes in the **Federal Register** an amendment adopting emergency airworthiness directive (AD) 2005–09–51 that we sent previously to all known U.S. owners and operators of certain Turbomeca Arrius 2F turboshaft engines. This AD requires before further flight, replacing the Module 2 on certain engines listed by serial number (SN) in this AD. This AD results from a report of the failure of a high pressure turbine (HPT) blade and damage to two other HPT blades in a Turbomeca Arrius 2F turboshaft engine. We are issuing this AD to prevent failure of the engine and subsequent loss of power.

DATES: This AD becomes effective June 3, 2005 to all persons except those persons to whom it was made immediately effective by emergency AD 2005–09–51, issued on April 28, 2005, which contained the requirements of this amendment.

We must receive any comments on this AD by July 18, 2005.

ADDRESSES: Use one of the following addresses to comment on this AD.

- DOT Docket Web site: Go to *http://dms.dot.gov* and follow the instructions for sending your comments electronically.
- Government-wide rulemaking Web site: Go to *http://www.regulations.gov* and follow the instructions for sending your comments electronically.
- Mail: Docket Management Facility; U.S. Department of Transportation, 400 Seventh Street, SW., Nassif Building, Room PL–401, Washington, DC 20590–0001.
- Fax: (202) 493–2251.
- Hand Delivery: Room PL–401 on the plaza level of the Nassif Building, 400 Seventh Street, SW., Washington, DC, between 9 a.m. and 5 p.m., Monday through Friday, except Federal holidays.

FOR FURTHER INFORMATION CONTACT: Christopher Spinney, Aerospace Engineer, Engine Certification Office, FAA, Engine and Propeller Directorate, 12 New England Executive Park, Burlington, MA 01803–2599, telephone (781) 238–7175; fax (781) 238–7199.

SUPPLEMENTARY INFORMATION: The Direction General De L'Aviation Civile (DGAC), which is the airworthiness authority for France, recently notified us that an unsafe condition might exist on certain Turbomeca Arrius 2F turboshaft engines. The DGAC advises that on March 31, 2005, the failure of an HPT blade and damage to two other HPT blades in a Turbomeca Arrius 2F turboshaft engine caused an in-flight engine shutdown (IFSD). That IFSD resulted in loss of the helicopter and fatalities and injuries to the occupants. A preliminary investigation of the engine found that a ferrule started a disturbance that reduced the cooling effect of the secondary air system. The secondary air system cools the HPT. Turbomeca identified 38 engines that might contain a configuration similar to the engine involved in the accident. This condition, if not corrected, could result in failure of the engine and subsequent loss of power. On April 28, 2005, we issued emergency AD 2005–09–51 that applies to certain Turbomeca Arrius 2F turboshaft engines. That AD requires before further flight, replacing the Module 2 on certain engines listed by SN in that AD.

Bilateral Airworthiness Agreement

This Turbomeca Arrius 2F turboshaft engine model is manufactured in France and is type certificated for operation in the United States under the provisions of section 21.29 of the Federal Aviation Regulations (14 CFR 21.29) and the applicable bilateral airworthiness agreement. Under this bilateral airworthiness agreement, the DGAC kept the FAA informed of the situation described above. We have examined the findings of the DGAC, reviewed all available information, and determined that AD action is necessary for products of this type design that are certificated for operation in the United States.

FAA's Determination and Requirements of This AD

Since the unsafe condition described is likely to exist or develop on other engines of the same type design, we issued emergency AD 2005–09–51 to prevent failure of the engine and subsequent loss of power. This AD requires before further flight, replacing the Module 2, on certain engines listed by SN in this AD.

FAA's Determination of the Effective Date

Since an unsafe condition exists that requires the immediate adoption of this AD, we have found that notice and opportunity for public comment before issuing this AD are impracticable, and that good cause existed to make the AD effective immediately on April 28, 2005, to all known U.S. owners and operators of Turbomeca Arrius 2F turbofan engines. These conditions still exist, and we are publishing the AD in the **Federal Register** as an amendment to Section 39.13 of part 39 of the Code Federal Regulations (14 CFR part 39) to make it effective to all persons.

Interim Action

These actions are interim actions and we may take further rulemaking actions in the future.

Comments Invited

This AD is a final rule that involves requirements affecting flight safety and was not preceded by notice and an opportunity for public comment. However, we invite you to send us any written relevant data, views, or arguments regarding this AD. Send your comments to an address listed under **ADDRESSES.** Include ''AD Docket No. FAA–2005–21155; Directorate Identifier 2005–NE–14–AD'' in the subject line of your comments. We specifically invite comments on the overall regulatory, economic, environmental, and energy aspects of the rule that might suggest a need to modify it.

We will post all comments we receive, without change, to *http://dms.dot.gov,* including any personal information you provide. We will also post a report summarizing each substantive verbal contact with FAA personnel concerning this AD. Using the search function of the DMS web site, anyone can find and read the comments in any of our dockets, including the name of the individual who sent the comment (or signed the comment on behalf of an association, business, labor union, etc.). You may review the DOT's complete Privacy Act Statement in the **Federal Register** published on April 11, 2000 (65 FR 19477–78) or you may visit *http://dms.dot.gov.*

Examining the AD Docket

You may examine the docket that contains the AD, any comments received, and any final disposition in person at the DMS Docket Offices between 9 a.m. and 5 p.m., Monday through Friday, except Federal holidays. The Docket Office (telephone (800) 647–5227) is located on the plaza level of the Department of Transportation Nassif Building at the street address stated in **ADDRESSES.** Comments will be available in the AD docket shortly after the DMS receives them.

Authority for This Rulemaking

Title 49 of the United States Code specifies the FAA's authority to issue rules on aviation safety. Subtitle I, Section 106, describes the authority of the FAA Administrator. Subtitle VII, Aviation Programs, describes in more detail the scope of the Agency's authority.

We are issuing this rulemaking under the authority described in Subtitle VII, Part A, Subpart III, Section 44701, ''General requirements.'' Under that section, Congress charges the FAA with promoting safe flight of civil aircraft in air commerce by prescribing regulations for practices, methods, and procedures the Administrator finds necessary for safety in air commerce. This regulation is within the scope of that authority because it addresses an unsafe condition that is likely to exist or develop on products identified in this rulemaking action.

Regulatory Findings

We have determined that this AD will not have federalism implications under Executive Order 13132. This AD will not have a substantial direct effect on the States, on the relationship between the national Government and the States, or on the distribution of power and responsibilities among the various levels of government.

For the reasons discussed above, I certify that the regulation:

1. Is not a ''significant regulatory action'' under Executive Order 12866;

2. Is not a ''significant rule'' under the DOT Regulatory Policies and Procedures (44 FR 11034, February 26, 1979); and

3. Will not have a significant economic impact, positive or negative, on a substantial number of small entities under the criteria of the Regulatory Flexibility Act.

We prepared a summary of the costs to comply with this AD and placed it in the AD Docket. You may get a copy of this summary at the address listed under **ADDRESSES.**

List of Subjects in 14 CFR Part 39

Air transportation, Aircraft, Aviation safety, Safety.

Adoption of the Amendment

■ Under the authority delegated to me by the Administrator, the Federal Aviation Administration amends part 39 of the Federal Aviation Regulations (14 CFR part 39) as follows:

PART 39—AIRWORTHINESS DIRECTIVES

■ 1. The authority citation for part 39 continues to read as follows:

Authority: 49 U.S.C. 106(g), 40113, 44701.

§ 39.13 [Amended]

■ 2. The FAA amends § 39.13 by adding the following new airworthiness directive:

2005–09–51 Turbomeca: Amendment 39–14099. Docket No. FAA–2005–21155; Directorate Identifier 2005–NE–14–AD.

Effective Date

(a) This airworthiness directive (AD) becomes effective June 3, 2005, to all persons except those persons to whom it was made immediately effective by emergency AD 2005–09–51, issued April 28, 2005, which contained the requirements of this amendment.

Affected ADs

(b) None.

Applicability

(c) This AD applies to certain Turbomeca Arrius 2F turboshaft engines listed by serial number (SN) in Table 1 of this AD. These engines are installed on, but not limited to, Eurocopter EC 120B Helicopters.

TABLE 1.—ENGINE AND MODULE SERIAL NUMBERS

Engine SN	Module 2 SN
34416	01045
34417	01063
34418	01052
34419	01053
34420	01067
34421	01068
34422	01051
34423	01078
34424	01079
34425	01080
34426	01083
34427	01089
34428	01090
34429	01097
34430	01098
34431	01099
34432	01102
34433	01103
34434	01109
34435	01110

TABLE 1.—ENGINE AND MODULE SERIAL NUMBERS—Continued

Engine SN	Module 2 SN
34436	01121
34437	01122
34438	01123
34439	01136
34440	01139
34441	01140
34442	01138
34443	01141
34444	01142
34445	01146
34446	01147
34447	01148
34448	01164
34449	01165
34450	01177
Not Installed	01149
34033	00125
34177	00446

Unsafe Condition

(d) This AD results from failure of a high pressure turbine (HPT) blade and damage to two other HPT blades in a Turbomeca Arrius 2F turboshaft engine on March 31, 2005. We are issuing this AD to prevent failure of the engine and subsequent loss of power.

Compliance

(e) You are responsible for having the actions required by this AD performed before further flight, unless the actions have already been done.

Replacing the Module 2

(f) Before further flight, on Turbomeca Arrius 2F engines that have a SN listed in Table 1 of this AD, remove the Module 2 and replace the Module with a Module 2 that was overhauled or that has a SN not listed in Table 1 of this AD.

Alternative Methods of Compliance

(g) The Manager, Engine Certification Office, has the authority to approve alternative methods of compliance for this AD if requested using the procedures found in 14 CFR 39.19.

Related Information

(h) Direction General De L'Aviation Civile Emergency airworthiness directive No. UF–2005–073, dated April 27, 2005, also addresses the subject of this AD.

Issued in Burlington, Massachusetts, on May 13, 2005.

Robert J. Ganley,

Acting Manager, Engine and Propeller Directorate, Aircraft Certification Service.

[FR Doc. 05–9982 Filed 5–18–05; 8:45 am]

BILLING CODE 4910–13–P

DEPARTMENT OF TRANSPORTATION

Federal Aviation Administration

14 CFR Part 39

[Docket No. FAA–2004–19998; Directorate Identifier 2004–NM–224–AD; Amendment 39–14097; AD 2005–10–20]

RIN 2120–AA64

Airworthiness Directives; Boeing Model 777–200 Series Airplanes

AGENCY: Federal Aviation Administration (FAA), Department of Transportation (DOT).

ACTION: Final rule.

SUMMARY: The FAA is adopting a new airworthiness directive (AD) for certain Boeing Model 777–200 series airplanes. This AD requires replacing the pressure switches on the override/jettison fuel pumps with new pressure switches, and replacing the ship side electrical connectors for the pressure switches on override/jettison fuel pumps with new connectors. This AD is prompted by reports that the ''FUEL LOW CENTER'' message does not activate when the fuel level in the center tank is low. We are issuing this AD to prevent the fuel pumps in the center fuel tank from running dry and becoming a potential ignition source, which could result in a fuel tank explosion.

DATES: This AD becomes effective June 23, 2005.

The incorporation by reference of a certain publication listed in the AD is approved by the Director of the Federal Register as of June 23, 2005.

ADDRESSES: For service information identified in this AD, contact Boeing Commercial Airplanes, P.O. Box 3707, Seattle, Washington 98124–2207.

Docket: AD docket contains the proposed AD, comments, and any final disposition. You can examine the AD docket on the Internet at *http://dms.dot.gov*, or in person at the Docket Management Facility office between 9 a.m. and 5 p.m., Monday through Friday, except Federal holidays. The Docket Management Facility office (telephone (800) 647–5227) is located on the plaza level of the Nassif Building at the U.S. Department of Transportation, 400 Seventh Street SW., room PL–401, Washington, DC. This docket number is FAA–2004–19998; the directorate identifier for this docket is 2004–NM–224–AD.

FOR FURTHER INFORMATION CONTACT: Margaret Langsted, Aerospace Engineer, Propulsion Branch, ANM–140S, FAA, Seattle Aircraft Certification Office, 1601 Lind Avenue, SW., Renton, Washington 98055–4056; telephone (425) 917–6500; fax (425) 917–6590.

SUPPLEMENTARY INFORMATION: The FAA proposed to amend 14 CFR part 39 with an AD for certain Boeing Model 777–200 series airplanes. That action, published in the **Federal Register** on January 5, 2005 (70 FR 735), proposed to require replacing the pressure switches on the override/jettison fuel pumps with new pressure switches, and replacing the ship side electrical connectors for the pressure switches on override/jettison fuel pumps with new connectors.

Comments

We provided the public the opportunity to participate in the development of this AD. We have considered the comments that have been submitted on the proposed AD. One commenter concurs with the contents of the proposed AD.

Request To Clarify Applicability

One commenter states that there is a concern for possible misinterpretation of the applicability specified in the Summary and Applicability sections of the proposed AD. The commenter adds that the referenced service bulletin specifically identifies the affected airplanes, and it is only applicable to Boeing Model 777–200 series airplanes equipped with no center wing tank, and is not applicable to Boeing Model 777–200ER series airplanes. The commenter recommends clarification that Model 777–200ER series airplanes are not affected be added to the proposed AD.

We acknowledge the commenter's concern and offer clarification. The proposed AD is applicable to Boeing Model 777–200 series airplanes, certificated in any category; as identified in Boeing Special Attention Service Bulletin 777–28–0036, dated September 2, 2004. There are two center wing tank configurations certificated on the Model 777–200 series airplane; the referenced service bulletin identifies the airplanes that have the smaller tank configuration. The other Model 777–200 series airplanes, informally referred to by Boeing as Model 777–200ER airplanes, have a larger center wing tank and a different pump inlet configuration. Therefore, Model 777–200ER airplanes are not subject to the identified unsafe condition. We have not changed the final rule in this regard.

Request To Change the Costs of Compliance Section/Compliance Time

One commenter asks that the work hours shown in the estimated costs table in the proposed AD be reconsidered. The commenter estimates 5.5 work

hours are necessary to perform the modification alone, without taking into account the time for access and close up. The commenter adds that it is unlikely that this modification can be scheduled on an overnight maintenance check, and would most likely be accomplished during maintenance base visits. In light of the above, the commenter notes that the 24-month compliance time allows little flexibility to negotiate unforeseen scheduling problems. The commenter states that any deadline requirement that is less than 24 months will require special maintenance visits beyond the current schedule to accomplish the modification.

We do not agree that it is necessary to change the work hours in this AD, which reflect only the direct costs of the specific required actions based on the best data available from the manufacturer. We recognize that operators may incur incidental costs (such as the time for planning and associated administrative actions) in addition to the direct costs. The cost analysis in ADs, however, typically does not include incidental costs. The 24-month compliance time in this AD should allow ample time for the majority of affected operators to do the required actions at the same time as scheduled major airplane inspection and maintenance activities, which would reduce the additional time and costs associated with special scheduling. We note that the 24-month compliance time is consistent with the compliance time specified in the referenced service bulletin. We have not changed the final rule in this regard.

Conclusion

We have carefully reviewed the available data, including the comments that have been submitted, and determined that air safety and the public interest require adopting the AD as proposed.

Costs of Compliance

There are about 61 airplanes of the affected design in the worldwide fleet. The following table provides the estimated costs for U.S. operators to comply with this AD.

ESTIMATED COSTS

Action	Work hours	Average labor rate per hour	Parts	Cost per airplane	Number of U.S.-registered airplanes	Fleet cost
Replacement	3	$65	$13,430	$13,625	21	$286,125

Authority for This Rulemaking

Title 49 of the United States Code specifies the FAA's authority to issue rules on aviation safety. Subtitle I, Section 106, describes the authority of the FAA Administrator. Subtitle VII, Aviation Programs, describes in more detail the scope of the Agency's authority.

We are issuing this rulemaking under the authority described in Subtitle VII, Part A, Subpart III, Section 44701, ''General requirements.'' Under that section, Congress charges the FAA with promoting safe flight of civil aircraft in air commerce by prescribing regulations for practices, methods, and procedures the Administrator finds necessary for safety in air commerce. This regulation is within the scope of that authority because it addresses an unsafe condition that is likely to exist or develop on products identified in this rulemaking action.

Regulatory Findings

We have determined that this AD will not have federalism implications under Executive Order 13132. This AD will not have a substantial direct effect on the States, on the relationship between the national government and the States, or on the distribution of power and responsibilities among the various levels of government.

For the reasons discussed above, I certify that this AD:

(1) Is not a ''significant regulatory action'' under Executive Order 12866;

(2) Is not a ''significant rule'' under DOT Regulatory Policies and Procedures (44 FR 11034, February 26, 1979); and

(3) Will not have a significant economic impact, positive or negative, on a substantial number of small entities under the criteria of the Regulatory Flexibility Act.

We prepared a regulatory evaluation of the estimated costs to comply with this AD. See the **ADDRESSES** section for a location to examine the regulatory evaluation.

List of Subjects in 14 CFR Part 39

Air transportation, Aircraft, Aviation safety, Incorporation by reference, Safety.

Adoption of the Amendment

■ Accordingly, under the authority delegated to me by the Administrator, the FAA amends 14 CFR part 39 as follows:

PART 39—AIRWORTHINESS DIRECTIVES

■ 1. The authority citation for part 39 continues to read as follows:

Authority: 49 U.S.C. 106(g), 40113, 44701.

§ 39.13 [Amended]

■ 2. The FAA amends § 39.13 by adding the following new airworthiness directive (AD):

2005–10–20 Boeing: Amendment 39–14097. Docket No. FAA–2004–19998; Directorate Identifier 2004–NM–224–AD.

Effective Date

(a) This AD becomes effective June 23, 2005.

Affected ADs

(b) None.

Applicability

(c) This AD applies to Boeing Model 777–200 series airplanes, certificated in any category; as identified in Boeing Special Attention Service Bulletin 777–28–0036, dated September 2, 2004.

Unsafe Condition

(d) This AD was prompted by reports that the ''FUEL LOW CENTER'' message does not activate when the fuel level in the center tank is low. We are issuing this AD to prevent the fuel pumps in the center fuel tank from running dry and becoming a potential ignition source, which could result in a fuel tank explosion.

Compliance

(e) You are responsible for having the actions required by this AD performed within the compliance times specified, unless the actions have already been done.

Replacement

(f) Within 24 months after the effective date of this AD, replace the pressure switches on the override/jettison fuel pumps with new pressure switches, and replace the ship side electrical connectors for the pressure switches on the override/jettison fuel pumps with new connectors, in accordance with the Accomplishment Instructions of Boeing

Special Attention Service Bulletin 777–28–0036, dated September 2, 2004.

Alternative Methods of Compliance (AMOCs)

(g) The Manager, Seattle Aircraft Certification Office, FAA, has the authority to approve AMOCs for this AD, if requested in accordance with the procedures found in 14 CFR 39.19.

Material Incorporated by Reference

(h) You must use Boeing Special Attention Service Bulletin 777–28–0036, dated September 2, 2004, to perform the actions that are required by this AD, unless the AD specifies otherwise. The Director of the Federal Register approves the incorporation by reference of this document in accordance with 5 U.S.C. 552(a) and 1 CFR part 51. To get copies of the service information, contact Boeing Commercial Airplanes, P.O. Box 3707, Seattle, Washington 98124–2207. To view the AD docket, go to the Docket Management Facility, U.S. Department of Transportation, 400 Seventh Street SW., room PL–401, Nassif Building, Washington, DC. To review copies of the service information, go to the National Archives and Records Administration (NARA).

For information on the availability of this material at the NARA, call (202) 741–6030, or go to *http://www.archives.gov/federal_register/code_of_federal_regulations/ibr_locations.html*.

Issued in Renton, Washington, on May 9, 2005.

Jeffrey E. Duven,

Acting Manager, Transport Airplane Directorate, Aircraft Certification Service.

[FR Doc. 05–9873 Filed 5–18–05; 8:45 am]

BILLING CODE 4910–13–P

DEPARTMENT OF TRANSPORTATION

Federal Aviation Administration

14 CFR Part 39

[Docket No. FAA–2004–19532; Directorate Identifier 2004–NM–87–AD; Amendment 39–14096; AD 2005–10–19]

RIN 2120–AA64

Airworthiness Directives; Boeing Model 747–100, 747–100B, 747–200B, 747–300, 747–400, 747–400D, 747SR, and 747SP Series Airplanes

AGENCY: Federal Aviation Administration (FAA), Department of Transportation (DOT).

ACTION: Final rule.

SUMMARY: The FAA is adopting a new airworthiness directive (AD) for certain Boeing Model 747–100, 747–100B, 747–200B, 747–300, 747–400, 747–400D, 747SR, and 747SP series airplanes. This AD requires replacing or modifying the control panels for the galley cart lift and modifying related electrical cable assemblies, as applicable. This AD is prompted by reports of injuries to catering personnel and flight attendants who were loading or unloading galley carts on one deck when, due to a disabled or malfunctioning safety interlock door switch, the galley cart lift unexpectedly moved when it was activated from the control panel on the other deck. We are issuing this AD to ensure that the galley cart lift can be sent only from the deck on which it is in use, which will prevent unexpected movement of the cart lift that could result in possible injury to catering personnel or flight attendants.

DATES: This AD becomes effective June 23, 2005.

The incorporation by reference of certain publications listed in the AD is approved by the Director of the Federal Register as of June 23, 2005.

ADDRESSES: For service information identified in this AD, contact Boeing Commercial Airplanes, P.O. Box 3707, Seattle, Washington 98124 2207.

Docket: The AD docket contains the proposed AD, comments, and any final disposition. You can examine the AD docket on the Internet at *http://dms.dot.gov,* or in person at the Docket Management Facility office between 9 a.m. and 5 p.m., Monday through Friday, except Federal holidays. The Docket Management Facility office (telephone (800) 647–5227) is located on the plaza level of the Nassif Building at the U.S. Department of Transportation, 400 Seventh Street SW., room PL–401, Washington, DC. This docket number is FAA–2004–19532; the directorate identifier for this docket is 2004–NM–87–AD.

FOR FURTHER INFORMATION CONTACT: Donald Wren, Aerospace Engineer, Cabin Safety and Environmental Systems Branch, ANM–150S, FAA, Seattle Aircraft Certification Office, 1601 Lind Avenue, SW., Renton, Washington 98055–4056; telephone (425) 917–6451; fax (425) 917–6590.

SUPPLEMENTARY INFORMATION: The FAA proposed to amend 14 CFR Part 39 with an AD for certain Boeing Model 747–100, 747–100B, 747–200B, 747–300, 747–400, 747–400D, 747SR, and 747SP series airplanes. That action, published in the **Federal Register** on November 5, 2004 (69 FR 64537), proposed to require replacing or modifying the control panels for the galley cart lift and modifying related electrical cable assemblies, as applicable.

Comments

We provided the public the opportunity to participate in the development of this AD. We have considered the comments that have been submitted on the proposed AD.

Request To Clarify Prompt Language and Statement of Unsafe Condition

One commenter, the manufacturer, requests that we clarify the statements in the Summary and paragraph (d) of the proposed AD of what prompted the proposed AD and clarifying the unsafe condition. The commenter suggests we can do this by explaining the role of a disabled or malfunctioning safety interlock door switch of the galley cart lift. The commenter states that the existing statements do not clearly describe the string of events relevant to the unexpected movement of the galley cart lift.

We partially agree. The statement of what prompted the proposed AD would be clearer if we included the role of a disabled or malfunctioning safety interlock door switch of the galley cart lift. We have changed the Summary and paragraph (d) of the final rule to include this role.

However, we do not agree that the statement of the unsafe condition should include the role of a disabled or malfunctioning safety interlock door switch. The purpose of this AD is to prevent the galley cart lift from being activated from the other deck control panel, regardless of whether the safety interlock switch is functional or not. We have not changed the final rule in this regard.

Request To Clarify Discussion and Relevant Service Information

The same commenter requests that the Discussion and Relevant Service Information sections of the proposed AD be revised to include the role of a disabled or malfunctioning safety interlock door switch. The commenter states the same reason as before.

We do not agree. The existing sections are intended to describe the unsafe condition and are adequate as written. Further, the Discussion and Relevant Service Information sections are not carried forward into the final rule. No change is needed in this regard.

Request To Specify Increased Personnel Training and Oversight

The same commenter requests that the Relevant Service Information section be revised by adding Boeing Alert Service Bulletin 747–25A3116, which specifies installation of additional cautionary placarding to the galley lift doors. Further, the commenter states that increased levels of operational training and oversight would best minimize injury of personnel who operate the galley cart lift. The commenter states

these actions will have the greatest effect in reducing potential injuries.

We do not agree. The commenter's proposed revision introduces the replacement and/or relocation of warning placards as well as additional recommended actions involving crew training and oversight that are not required by this AD. Additional crew training and oversight and additional placards may be helpful but we have determined, in this case, that the actions mandated by this AD are sufficient to address the unsafe condition. Further, as already stated, the Relevant Service Information section is not carried forward into the final rule. No change is needed in this regard.

Conclusion

We have carefully reviewed the available data, including the comments that have been submitted, and determined that air safety and the public interest require adopting the AD with the changes described previously. We have determined that these changes will neither increase the economic burden on any operator nor increase the scope of the AD.

Costs of Compliance

There are about 600 airplanes of the affected design worldwide. This AD will affect about 66 airplanes of U.S. registry.

About 22 Model 747–100, 747–100B, 747–200B, 747–300, 747SR, and 747SP series airplanes of U.S. registry will be affected by the required actions. It will take about 7 work hours per airplane to do the required actions, at an average labor rate of $65 per work hour. Required parts will cost about $143 per airplane. Based on these figures, the estimated cost of the AD for these U.S. operators is $13,156, or $598 per airplane.

About 44 Model 747–400 and 747–400D series airplanes of U.S. registry will be affected by the required actions. It will take about 2 work hours per airplane to do the required actions, at an average labor rate of $65 per work hour. Required parts will cost about $4,934 per airplane. Based on these figures, the estimated cost of the AD for these U.S. operators is $222,816, or $5,064 per airplane.

Authority for This Rulemaking

Title 49 of the United States Code specifies the FAA's authority to issue rules on aviation safety. Subtitle I, Section 106, describes the authority of the FAA Administrator. Subtitle VII, Aviation Programs, describes in more detail the scope of the Agency's authority.

We are issuing this rulemaking under the authority described in Subtitle VII, Part A, Subpart III, Section 44701, ''General requirements.'' Under that section, Congress charges the FAA with promoting safe flight of civil aircraft in air commerce by prescribing regulations for practices, methods, and procedures the Administrator finds necessary for safety in air commerce. This regulation is within the scope of that authority because it addresses an unsafe condition that is likely to exist or develop on products identified in this rulemaking action.

Regulatory Findings

We have determined that this AD will not have federalism implications under Executive Order 13132. This AD will not have a substantial direct effect on the States, on the relationship between the national government and the States, or on the distribution of power and responsibilities among the various levels of government.

For the reasons discussed above, I certify that this AD:

(1) Is not a ''significant regulatory action'' under Executive Order 12866;

(2) Is not a ''significant rule'' under DOT Regulatory Policies and Procedures (44 FR 11034, February 26, 1979); and

(3) Will not have a significant economic impact, positive or negative, on a substantial number of small entities under the criteria of the Regulatory Flexibility Act.

We prepared a regulatory evaluation of the estimated costs to comply with this AD. See the **ADDRESSES** section for a location to examine the regulatory evaluation.

List of Subjects in 14 CFR Part 39

Air transportation, Aircraft, Aviation safety, Incorporation by reference, Safety.

Adoption of the Amendment

■ Accordingly, under the authority delegated to me by the Administrator, the FAA amends 14 CFR part 39 as follows:

PART 39—AIRWORTHINESS DIRECTIVES

■ 1. The authority citation for part 39 continues to read as follows:

Authority: 49 U.S.C. 106(g), 40113, 44701.

§ 39.13 [Amended]

■ 2. The FAA amends § 39.13 by adding the following new airworthiness directive (AD):

2005–10–19 Boeing: Amendment 39–14096. Docket No. FAA–2004–19532; Directorate Identifier 2004–NM–87–AD.

Effective Date

(a) This AD becomes effective June 23, 2005.

Affected ADs

(b) None.

Applicability

(c) This AD applies to certain Boeing Model 747–100, 747–100B, 747–200B, 747–300, 747SR, and 747SP series airplanes, as identified in Boeing Alert Service Bulletin 747–25A3287, Revision 2, dated September 4, 2003; and Model 747–400 and 747–400D series airplanes, as identified in Boeing Service Bulletin 747–25A3187, Revision 2, dated January 27, 2000; certificated in any category.

Unsafe Condition

(d) This AD was prompted by reports of injuries to catering personnel and flight attendants who were loading or unloading galley carts on one deck when, due to a disabled or malfunctioning safety interlock door switch, the galley cart lift unexpectedly moved when it was activated from the control panel on the other deck. We are issuing this AD to ensure that the galley cart lift can be sent only from the deck on which it is in use, which will prevent unexpected movement of the cart lift that could result in possible injury to catering personnel or flight attendants.

Compliance

(e) You are responsible for having the actions required by this AD performed within the compliance times specified, unless the actions have already been done.

Replacement/Modification of Control Panel

(f) Within 18 months after the effective date of this AD, accomplish the actions required by paragraph (f)(1) or (f)(2) of this AD, as applicable.

(1) For Model 747–400 and 747–400D series airplanes: Replace the main and upper deck control panels for the galley cart lift with new or modified control panels by doing all the actions specified in Boeing Service Bulletin 747–25A3187, Revision 2, dated January 27, 2000.

(2) For Model 747–100, 747–100B, 747–200B, 747–300, 747SR, and 747SP series airplanes: Modify the main and upper deck control panels and related cable assemblies for the galley cart lift by doing all the actions specified in Boeing Alert Service Bulletin 747–25A3287, Revision 2, dated September 4, 2003.

Actions Accomplished Per Previous Issue of Service Bulletin

(g) Actions accomplished before the effective date of this AD in accordance with Boeing Alert Service Bulletin 747–25A3287, dated October 25, 2001, or Revision 1, dated April 25, 2002; or in accordance with Boeing Service Bulletin 747–25A3187, dated April 29, 1999, or Revision 1, dated September 23, 1999; are considered acceptable for compliance with the corresponding actions specified in paragraph (f) of this AD.

Alternative Methods of Compliance (AMOCs)

(h) The Manager, Seattle Aircraft Certification Office, FAA, has the authority to approve AMOCs for this AD, if requested in accordance with the procedures found in 14 CFR 39.19.

Material Incorporated by Reference

(i) You must use Boeing Service Bulletin 747–25A3187, Revision 2, dated January 27, 2000; or Boeing Alert Service Bulletin 747–25A3287, Revision 2, dated September 4, 2003; as applicable; to perform the actions that are required by this AD, unless the AD specifies otherwise. The Director of the Federal Register approves the incorporation by reference of these documents in accordance with 5 U.S.C. 552(a) and 1 CFR part 51. To get copies of the service information, go to Boeing Commercial Airplanes, P.O. Box 3707, Seattle, Washington 98124–2207. To view the AD docket, go to the Docket Management Facility, U.S. Department of Transportation, 400 Seventh Street SW., room PL–401, Nassif Building, Washington, DC. To review copies of the service information, go to the National Archives and Records Administration (NARA). For information on the availability of this material at the NARA, call (202) 741–6030, or go to *http://www.archives.gov/federal_register/code_of_federal_regulations/ibr_locations.html.*

Issued in Renton, Washington, on May 9, 2005.

Jeffrey E. Duven,

Acting Manager, Transport Airplane Directorate, Aircraft Certification Service.

[FR Doc. 05–9874 Filed 5–18–05; 8:45 am]

BILLING CODE 4910–13–P

DEPARTMENT OF TRANSPORTATION

Federal Aviation Administration

14 CFR Part 39

[Docket No. 2003–NM–214–AD; Amendment 39–14094; AD 2005–10–17]

RIN 2120–AA64

Airworthiness Directives; Boeing Model 777–200 and –300 Series Airplanes

AGENCY: Federal Aviation Administration (FAA), Department of Transportation (DOT).

ACTION: Final rule.

SUMMARY: This amendment adopts a new airworthiness directive (AD), applicable to certain Boeing Model 777–200 and –300 series airplanes, that requires modification of the bolt holes of the lower side of the body splice t-chord common to the paddle fittings of the lower wing panel. The modification includes performing a high frequency eddy current inspection of the fastener holes for cracks, repairing the hole if necessary, and replacing the fasteners with new inconel bolts. This action is necessary to prevent fatigue cracks in the lower t-chord at the bolt holes common to the paddle fittings that could result in fractures of one or more of the t-chord segments, which could lead to detachment of the lower wing panel and consequent loss of the wing. This action is intended to address the identified unsafe condition.

DATES: Effective June 23, 2005.

The incorporation by reference of a certain publication listed in the regulations is approved by the Director of the Federal Register as of June 23, 2005.

ADDRESSES: The service information referenced in this AD may be obtained from Boeing Commercial Airplanes, P.O. Box 3707, Seattle, Washington 98124–2207. This information may be examined at the Federal Aviation Administration (FAA), Transport Airplane Directorate, Rules Docket, 1601 Lind Avenue, SW., Renton, Washington.

FOR FURTHER INFORMATION CONTACT: Gary Oltman, Aerospace Engineer, Airframe Branch, ANM–120S, FAA, Seattle Aircraft Certification Office, 1601 Lind Avenue, SW., Renton, Washington 98055–4056; telephone (425) 917–6443; fax (425) 917–6590.

SUPPLEMENTARY INFORMATION: A proposal to amend part 39 of the Federal Aviation Regulations (14 CFR part 39) to include an airworthiness directive (AD) that is applicable to certain Boeing Model 777–200 and –300 series airplanes was published in the **Federal Register** on June 16, 2004 (69 FR 33595). That action proposed to require modification of the bolt holes of the lower side of the body splice t-chord common to the paddle fitting of the lower wing panel. The modification includes performing a high frequency eddy current inspection of the fastener hole for cracks, repairing the hole if necessary, and replacing the fasteners with new inconel bolts.

Comments

Interested persons have been afforded an opportunity to participate in the making of this amendment. Due consideration has been given to the comments received.

Agreement With Proposed Modification

Two commenters generally agree with the proposal to mandate the modification specified in the proposed AD instead of allowing an option to accomplish repetitive inspections. One commenter notes that the work hours needed to do the modification are comparable to the work hours needed to do the inspection.

Request To Revise Compliance Times Based on ''Sliding Scale'' Equation

One commenter, the manufacturer, requests that the compliance times specified in paragraph (a) of the proposed AD be revised to be based on a ''sliding scale'' equation. The commenter states that the ''sliding scale'' equation determines compliance times based on an evaluation of the total flight cycles associated with the total flight hours. The commenter notes that the compliance times specified in paragraph (a) of the proposed AD were found to be adversely affecting operators who use airplanes on long missions. The commenter states that some airplanes are reaching the 60,000 total flight-hour threshold before reaching 8,000 total flight cycles. The commenter further contends that the cracks addressed in the proposed AD are largely a function of flight cycles, not flight hours, and that, for these airplanes, the proposed AD would mandate the modification before it is necessary.

We agree with the commenter to revise the compliance times specified in paragraph (a) of the final rule. However, we do not agree with the compliance time based on a ''sliding scale'' equation proposed by the commenter. That proposed compliance time would expand the compliance envelope for airplanes utilized on long missions but would reduce the compliance time for airplanes near the 20,000 flight-cycle and 60,000 flight-hour compliance envelope.

We held an ex-parte meeting with the commenter to discuss its proposed compliance time. The commenter presented data in support of a new ''sliding scale'' equation for the compliance time that differed from the equation proposed in the manufacturer's comment. The new proposed compliance time simply expanded the compliance time specified in the proposed AD. The new data were accepted and subsequently incorporated into Boeing Service Bulletin 777–57A0040, Revision 2, dated February 24, 2005. Boeing Service Bulletin 777–57A0040, Revision 1, dated July 10, 2003, was referenced as the appropriate source of service information for accomplishing the proposed actions. Revision 2 of the service bulletin contains the same actions for doing the modification as Revision 1 of the service bulletin.

We have revised paragraph (a) of the final rule to reference Revision 2 of the

service bulletin as the appropriate source of service information for doing the actions, and we have revised paragraph (a)(1) of the final rule to specify the compliance times in the service bulletin. The service bulletin specifies the actions be done within approximately 20,000 total flight cycles, or 80,000 total flight hours, as shown in Figure 1 of the service bulletin.

We have also revised the applicability of the final rule to reference Revision 2 of the service bulletin. In addition, we added new paragraph (c) of the final rule to allow credit for actions done in accordance with Revision 1 of the service bulletin.

Request To Increase the Flight Hour Compliance Time

Several commenters request that the flight-hour compliance time specified in paragraph (a)(1) of the proposed AD be increased from 60,000 total flight hours to 65,000 total flight hours.

One commenter notes that, when its airplanes reach the 60,000 total flight-hour threshold, the airplanes will have only 12,000 total flight cycles, which is well below the 20,000 total flight-cycle threshold. The commenter states that increasing the flight-hour compliance time will allow accomplishing the modification at 65,000 total flight hours, which leaves approximately 7,000 flight cycles remaining before reaching the 20,000 total flight cycle threshold. The commenter also points out that it concurs with Boeing that the premature accomplishment of the modification would decrease the fatigue life of the affected area. The commenter notes that an airplane's productive life may be decreased if there is premature accomplishment of the modification because fatigue cracks may occur earlier than on airplanes that do not accomplish the modification prematurely. The commenter contends that increasing the flight-hour threshold will prevent premature accomplishment of the modification for airplanes having a low number of flight cycles.

One other commenter states that the issue addressed by the proposed AD is a fatigue concern and therefore the flight cycle compliance time is more relevant than the flight-hour compliance time. The commenter notes that Boeing is in agreement with the request to increase the compliance time to 65,000 flight hours. The commenter states that increasing the compliance time will allow it to accomplish the modification during heavy maintenance visits instead of light maintenance visits.

Another commenter states that further studies may show justification for greater increases in the compliance times.

We do not agree with the commenters' request to increase the flight-hour compliance time specified in paragraph (a)(1) of the final rule to 65,000 flight hours. The commenters did not provide data to substantiate that the change in compliance time would provide an acceptable level of safety. In addition, the manufacturer determined after further analysis that premature accomplishment of the modification is not an issue. However, as stated previously in the ''Request to Revise Compliance Times Based on ''Sliding Scale'' Equation'' paragraph, we have revised the compliance time specified in paragraph (a)(1) of the final rule to refer to the compliance time specified in Revision 2 of Boeing Service Bulletin 777–57A0040. The revised compliance time extends the compliance time threshold for certain airplanes.

In developing an appropriate compliance time for this action, we considered the urgency associated with the subject unsafe condition, the compliance times recommended by the manufacturer, and the practical aspect of accomplishing the required modification within a period of time that corresponds to the normal scheduled maintenance for most affected operators. In addition, according to the provisions of paragraph (d) of the final rule, we may approve requests to adjust the compliance time if the request includes data that substantiate that the new compliance time would provide an acceptable level of safety. No change is made to this final rule in this regard.

Request To Increase Flight Hour and Flight Cycle Compliance Time

One commenter requests that the compliance times specified in paragraph (a)(1) of the proposed AD be revised to ''70,000 [total] flight hours or 10,000 [total] flight cycles, whichever comes first.'' The commenters state that this new compliance time would lessen the impact on operators that use high flight hour airplanes.

We partially agree with the request to revise the compliance times in paragraph (a)(1) of the final rule. The commenter did not provide data to substantiate that reducing the flight cycle threshold and increasing the flight hour threshold would provide an acceptable level of safety, and therefore, we have not revised the final rule in this regard. However, as stated previously in the ''Request to Revise Compliance Times Based on ''Sliding Scale'' Equation'' paragraph, we have revised the compliance time specified in paragraph (a)(1) of the final rule to refer to the compliance time specified in Revision 2 of Boeing Service Bulletin 777–57A0040. Airplanes having 70,000 total flight hours and 10,000 total flight cycles would be compliant within the compliance time specified in Revision 2.

Request To Add Reference About the Early Accomplishment of the Modification

One commenter states it is concerned that the proposed AD does not include reference to flag note 2 of Figure 1 of Boeing Service Bulletin 777–57A0040, Revision 1, dated July 10, 2003, which states that ''the full benefit of the modification will not be realized if the modification is accomplished too early in the airplane life.'' The commenter notes that, if the modification is done early and then cracks are discovered later, there may be future regulatory action. The commenter contends this would create an unnecessary burden to operators that accomplish the actions in the proposed AD.

We infer from the commenter's statement that it requests that a reference be added to the final rule regarding the early accomplishment of the modification as specified in Revision 1 of the service bulletin. However, as stated previously in the ''Request to Revise Compliance Times Based on ''Sliding Scale'' Equation'' paragraph, Revision 2 of the service bulletin is referenced as the appropriate source of service information for accomplishing the required actions in the final rule. Revision 2 of the service bulletin does not include flag note 2 of Figure 1 from Revision 1 of the service bulletin. After the manufacturer did further analysis, the manufacturer determined that the note is not necessary. We have not revised the final rule in this regard.

Request To Revise the Cost Impact

One commenter states that actions specified in the proposed AD will take 200 work hours and that the materials will cost $24,000, for a total cost of $464,266 per airplane.

We infer from the commenter's statement that it requests that the estimate be revised in the Cost Impact section of the final rule. We partially agree with the commenter to revise the Cost Impact section of the final rule. We have revised the work hour estimate in the final rule from approximately 34 work hours per airplane to 68 work hours per airplane. We do not agree to revise the work hour estimate to the commenter's work hour estimate of 200 work hours per airplane. The work hour

estimate in the final rule represents only the time necessary to perform the specific actions actually required by the final rule. The work hour estimate typically does not include incidental costs, such as the time required to gain access and close up, planning time, or time necessitated by other administrative actions. The commenter's estimate of $24,000 for materials is within the range specified in the Cost Impact section of the final rule, which specifies parts cost between approximately $21,686 and $24,803. We have not made a change to the parts cost estimate in the final rule in this regard.

Changes to Delegation Authority

Boeing has received a Delegation Option Authorization (DOA). We have revised this final rule to delegate the authority to approve an alternative method of compliance for any repair required by this AD (if specifically authorized) to the Authorized Representative for the Boeing DOA Organization rather than the Designated Engineering Representative (DER).

Conclusion

After careful review of the available data, including the comments noted above, we have determined that air safety and the public interest require the adoption of the rule with the changes previously described. These changes will neither increase the economic burden on any operator nor increase the scope of the AD.

Cost Impact

There are approximately 262 airplanes of the affected design in the worldwide fleet. The FAA estimates that 73 airplanes of U.S. registry will be affected by this final rule, that it would take approximately 68 work hours per airplane to accomplish the required modification, and that the average labor rate is $65 per work hour. Required parts will cost between approximately $21,686 and $24,803 per airplane. Based on these figures, the cost impact of the final rule on U.S. operators is estimated to be between $1,905,738 and $2,133, 279, or between $26,106 and $29,223 per airplane.

The cost impact figure discussed above is based on assumptions that no operator has yet accomplished any of the requirements of this AD action, and that no operator would accomplish those actions in the future if this AD were not adopted. The cost impact figures discussed in AD rulemaking actions represent only the time necessary to perform the specific actions actually required by the AD. These figures typically do not include incidental costs, such as the time required to gain access and close up, planning time, or time necessitated by other administrative actions.

Authority for This Rulemaking

The FAA's authority to issue rules regarding aviation safety is found in Title 49 of the United States Code. Subtitle I, Section 106 describes the authority of the FAA Administrator. Subtitle VII, Aviation Programs, describes in more detail the scope of the agency's authority.

This rulemaking is promulgated under the authority described in Subtitle VII, Part A, Subpart III, Section 44701, ''General requirements.'' Under that section, Congress charges the FAA with promoting safe flight of civil aircraft in air commerce by prescribing regulations for practices, methods, and procedures the Administrator finds necessary for safety in air commerce. This regulation is within the scope of that authority because it addresses an unsafe condition that is likely to exist or develop on products identified in this AD.

Regulatory Impact

The regulations adopted herein will not have a substantial direct effect on the States, on the relationship between the national Government and the States, or on the distribution of power and responsibilities among the various levels of government. Therefore, it is determined that this final rule does not have federalism implications under Executive Order 13132.

For the reasons discussed above, I certify that this action (1) is not a ''significant regulatory action'' under Executive Order 12866; (2) is not a ''significant rule'' under DOT Regulatory Policies and Procedures (44 FR 11034, February 26, 1979); and (3) will not have a significant economic impact, positive or negative, on a substantial number of small entities under the criteria of the Regulatory Flexibility Act. A final evaluation has been prepared for this action and it is contained in the Rules Docket. A copy of it may be obtained from the Rules Docket at the location provided under the caption **ADDRESSES.**

List of Subjects in 14 CFR Part 39

Air transportation, Aircraft, Aviation safety, Incorporation by reference, Safety.

Adoption of the Amendment

■ Accordingly, pursuant to the authority delegated to me by the Administrator, the Federal Aviation Administration amends part 39 of the Federal Aviation Regulations (14 CFR part 39) as follows:

PART 39—AIRWORTHINESS DIRECTIVES

■ 1. The authority citation for part 39 continues to read as follows:

Authority: 49 U.S.C. 106(g), 40113, 44701.

§ 39.13 [Amended]

■ 2. Section 39.13 is amended by adding the following new airworthiness directive:

2005–10–17 Boeing: Amendment 39–14094. Docket 2003–NM–214–AD.

Applicability: Model 777–200 and –300 series airplanes, certificated in any category, as identified in Boeing Service Bulletin 777–57A0040, Revision 2, dated February 24, 2005.

Compliance: Required as indicated, unless accomplished previously.

To prevent fatigue cracks in the lower t-chord at the bolt holes common to the paddle fittings that could result in fractures of one or more of the t-chord segments, which could lead to detachment of the lower wing panel and consequent loss of the wing, accomplish the following:

Modification of the Lower Paddle Fitting Bolt Holes/Fastener Replacement

(a) At the later of the times specified in paragraphs (a)(1) and (a)(2) of this AD, modify the bolt holes of the lower side of the body splice t-chord common to the paddle fittings of the lower wing panel (includes performing a high frequency eddy current inspection of the fastener hole for cracks, repairing the hole if necessary, and replacing the fasteners with new inconel bolts) by accomplishing all of the actions specified in ''Part 2—Preventative Modification'' of the Work Instructions of Boeing Service Bulletin 777–57A0040, Revision 2, dated February 24, 2005, except as provided by paragraph (b) of this AD. Any applicable repair must be accomplished before further flight.

(1) At the time specified in Figure 1 of the service bulletin. Where the service bulletin refers to compliance times as flight hours and flight cycles, this AD refers to the compliance times as total flight hours and total flight cycles.

(2) Within 1,500 days or 8,000 flight cycles after the effective date of this AD, whichever is first.

(b) If any crack is found during the modification required by paragraph (a) of this AD, and the service bulletin specifies to contact Boeing for additional instructions: Before further flight, repair per a method approved by the Manager, Seattle Aircraft Certification Office (ACO), FAA; or according to data meeting the certification basis of the airplane approved by an Authorized Representative for the Boeing Delegation Option Authorization Organization who has been authorized by the Manager, Seattle ACO, to make those findings. For a repair method to be approved, the repair must meet the certification basis of the airplane, and the approval must specifically refer to this AD.

Actions Accomplished According to Previous Issue of Service Bulletin

(c) Actions accomplished before the effective date of this AD according to Boeing Service Bulletin 777–57A0040, Revision 1, dated July 10, 2003, are considered acceptable for compliance with the corresponding action specified in this AD.

Alternative Methods of Compliance

(d) In accordance with 14 CFR 39.19, the Manager, Seattle ACO, is authorized to approve alternative methods of compliance for this AD.

Incorporation by Reference

(e) Unless otherwise specified in this AD, the actions shall be done in accordance with Boeing Service Bulletin 777–57A0040, Revision 2, dated February 24, 2005. This incorporation by reference was approved by the Director of the Federal Register in accordance with 5 U.S.C. 552(a) and 1 CFR part 51. To get copies of the service information, go to Boeing Commercial Airplanes, P.O. Box 3707, Seattle, Washington 98124–2207. Copies may be inspected at the FAA, Transport Airplane Directorate, 1601 Lind Avenue, SW., Renton, Washington; or at the National Archives and Records Administration (NARA). For information on the availability of this material at NARA, call (202) 741–6030, or go to: *http://www.archives.gov/federal_register/code_of_federal_regulations/ibr_locations.html.*

Effective Date

(f) This amendment becomes effective on June 23, 2005.

Issued in Renton, Washington, on May 9, 2005.

Jeffrey E. Duven,

Acting Manager, Transport Airplane Directorate, Aircraft Certification Service.

[FR Doc. 05–9875 Filed 5–18–05; 8:45 am]

BILLING CODE 4910–13–P

DEPARTMENT OF TRANSPORTATION

Federal Aviation Administration

14 CFR Part 39

[Docket No. FAA–2004–19796; Directorate Identifier 2004–NM–61–AD; Amendment 39–14095; AD 2005–10–18]

RIN 2120–AA64

Airworthiness Directives; Boeing Model 747–100, –100B, –100B SUD, –200B, –200C, –300, –400, and –400D Series Airplanes; and Model 747SR Series Airplanes

AGENCY: Federal Aviation Administration (FAA), Department of Transportation (DOT).

ACTION: Final rule.

SUMMARY: The FAA is superseding an existing airworthiness directive (AD), which applies to certain Boeing Model 747 series airplanes. That AD currently requires a one-time inspection to determine the material type of the stop support fittings of the main entry doors (MEDs). That AD also currently requires repetitive detailed inspections to detect cracks of certain stop support fittings of the MEDs, and replacement of any cracked stop support fitting with a certain new stop support fitting. This new AD adds new inspections, and replacement if necessary, of the stop support fittings of MED 3, and adds airplanes to the applicability. This AD is prompted by reports of MED 3 having certain stop support fittings that are susceptible to stress corrosion cracking. We are issuing this AD to detect and correct stress corrosion cracking of the stop support fittings of the MEDs, which could result in damage to the adjacent forward edge frame of the door and consequent loss of a MED and rapid decompression of the airplane.

DATES: This AD becomes effective June 23, 2005.

The incorporation by reference of Boeing Service Bulletin 747–53–2358, Revision 1, dated April 19, 2001; and Boeing Special Attention Service Bulletin 747–53–2485, dated January 8, 2004; as listed in the AD, is approved by the Director of the Federal Register as of June 23, 2005.

On January 25, 1999 (63 FR 70316, December 21, 1998), the Director of the Federal Register approved the incorporation by reference of Boeing Service Bulletin 747–53–2358, dated August 26, 1993.

ADDRESSES: For service information identified in this AD, contact Boeing Commercial Airplanes, P.O. Box 3707, Seattle, Washington 98124–2207.

Docket: The AD docket contains the proposed AD, comments, and any final disposition. You can examine the AD docket on the Internet at *http://dms.dot.gov,* or in person at the Docket Management Facility office between 9 a.m. and 5 p.m., Monday through Friday, except Federal holidays. The Docket Management Facility office (telephone (800) 647–5227) is located on the plaza level of the Nassif Building at the U.S. Department of Transportation, 400 Seventh Street, SW., room PL–401, Washington, DC. This docket number is FAA–2004–19796; the directorate identifier for this docket is 2004–NM–61–AD.

FOR FURTHER INFORMATION CONTACT: Ivan Li, Aerospace Engineer, Airframe Branch, ANM–120S, FAA, Seattle Aircraft Certification Office, 1601 Lind Avenue, SW., Renton, Washington 98055–4056; telephone (425) 917–6437; fax (425) 917–6590.

SUPPLEMENTARY INFORMATION: The FAA proposed to amend part 39 of the Federal Aviation Regulations (14 CFR Part 39) with an AD to supersede AD 98–26–13, amendment 39–10954 (63 FR 70316, December 21, 1998). The existing AD applies to certain Boeing Model 747 series airplanes. The proposed AD was published in the **Federal Register** on December 3, 2004 (69 FR 70204), to continue to require a one-time inspection to determine the material type of the stop support fittings of the main entry doors (MEDs), repetitive detailed inspections to detect cracks of certain stop support fittings of the MEDs, and replacement of any cracked stop support fitting with a certain new stop support fitting. The proposed AD also adds new inspections, and replacement if necessary, of the stop support fittings of MED 3, and adds airplanes to the applicability.

Comments

We provided the public the opportunity to participate in the development of this AD. We have considered the comments that have been submitted on the proposed AD.

Concur With the Proposed AD

One commenter concurs with the proposed AD and has no additional comments.

Request To Add Provision to State Operators Are Not in Violation of Proposed AD

One commenter requests that a provision be added to the proposed AD to state that operators ''are not in violation of paragraphs (f) and (g)'' of the proposed AD if it is determined that some of the fittings replaced in accordance with paragraphs (f) and (g) were made of the incorrect material. The commenter states that paragraphs (f) and (g) of the proposed AD specify that fittings be replaced with fittings made of the correct material. The commenter also states that paragraph (h) of the proposed AD specifies that replaced fittings be inspected to determine if the fittings are made of the correct material. Therefore, if an operator accomplishes the inspection specified in paragraph (h) of the proposed AD and finds fittings made of the incorrect material, then the operator would be in violation of the paragraphs (f) and (g) of the proposed AD.

We agree that an operator is not in violation of paragraphs (f), (g), and (l) of the final rule if fittings were replaced in good faith with fittings supplied by Boeing that are determined to be made

of the incorrect material during the inspection required by paragraph (h) of the final rule. As stated in the preamble of the proposed AD, ''the new stop support fittings supplied by Boeing as the replacement fitting for MED 3 may not have been made from the correct material type.'' Thus, operators may have unknowingly installed replacement fittings made of the incorrect material and should not be penalized if the inspection required by paragraph (h) of the final rule determines there are fittings made of the incorrect material. However, operators must then do the applicable inspections/replacement required by paragraph (k) of the final rule. We have not changed the final rule in this regard.

Request To Remove Requirement to Remove Foam and Inspect/Drill Drain Hole

One commenter requests that the actions specified in Boeing Special Attention Service Bulletin 747–53–2485 (cited in the proposed AD as the appropriate source of service information for accomplishing the proposed inspections) to remove foam and inspect/drill drain holes be removed from the requirements of the proposed AD. The commenter states it has established that the foam need not be removed to do the conductivity test. The commenter also states that ''this has been acknowledged in the Boeing telex SR 1–48729376/Message No 1–TETPP.''

We agree that removal of the foam and inspecting/drilling drain holes should not be required. Paragraphs (h) and (i) of the proposed AD specify only that an inspection to determine material type of the stop support fittings be done in accordance with Boeing Special Attention Service Bulletin 747–53–2485 and paragraph (k) of the proposed AD specifies that an inspection for cracks of the stop support fittings be done in accordance with the service bulletin. Removing foam and inspecting/drilling drain holes are not a part of these inspections and are not part of the corrective action needed to address the identified unsafe condition (stress corrosion cracking of the stop support fittings of the main entry doors). Because removing foam and inspecting/drilling drain holes are described in the Accomplishment Instructions of the service bulletin, we have added Note 2 to the final rule for clarification that these actions are not required when doing any inspection required by paragraphs (h), (i), and (k) of the final rule.

Request for Credit for Inspection

One commenter has no technical objections to the proposed AD. However, the commenter requests that if a stop support fitting was replaced before the effective date of the proposed AD and a conductivity test per Boeing 747 Nondestructive Test Manual D6 7170, Part 6, Chapter 51–00–00, Figure 20, was done during the replacement, then the one-time high frequency eddy current (HFEC) inspection specified in paragraph (h)(1) of the proposed AD need not be required.

We agree that, for any stop support fitting replaced before the effective date of the final rule on which a conductivity test per Boeing 747 Nondestructive Test Manual D6–7170, Part 6, Chapter 51–00–00, Figure 20, has been done, then the one-time HFEC inspection specified in paragraph (h)(1) of the final rule does not need to be done. The conductivity test per Boeing 747 Nondestructive Test Manual D6–7170, Part 6, Chapter 51–00–00, Figure 20, is the HFEC inspection specified in the final rule. The final rule specifies that the HFEC be done in accordance with Boeing Special Attention Service Bulletin 747–53–2485, and the service bulletin refers to Boeing 747 Nondestructive Test Manual D6–7170, Part 6, Chapter 51–00–00, Figure 20. Paragraph (e) of the final rule gives credit for actions done before the effective date of the final rule. We have not changed the final rule in this regard.

Request To Revise One-Time HFEC Inspection

One commenter requests that the one-time HFEC inspection specified in paragraph (h)(1) of the proposed AD be revised to be applicable only to fittings that were replaced before the effective date of AD 98–26–13. The commenter notes that paragraph (c) of AD 98–26–13 mandates that no person shall install a stop fitting made from either 7079–T651 or 7075–T651 material on any airplane as of January 25, 1999 (the effective date of AD 98–26–13). The commenter concludes that all stop support fittings installed after the effective date of AD 98–26–13 are required to be made from 7075–T73 or 7050–T451 aluminum.

We disagree with the request to revise the one-time HFEC inspection. As stated in the preamble of the proposed AD, ''the new stop support fittings supplied by Boeing as the replacement fitting for MED 3 may not have been made from the correct material type.'' Therefore, operators complying with AD 98–26–13 could have unknowingly installed support fittings supplied by Boeing that were made of the incorrect material (7079–T651 or 7075–T651 material). Because of this possibility, the final rule requires a one-time HFEC inspection of any stop support fittings that were replaced before the effective date of the final rule. We have not changed the final rule in this regard.

Conclusion

We have carefully reviewed the available data, including the comments that have been submitted, and determined that air safety and the public interest require adopting the AD with the change described previously. We have determined that this change will neither increase the economic burden on any operator nor increase the scope of the AD.

Costs of Compliance

There are about 814 airplanes of the affected design in the worldwide fleet. There are about 119 airplanes of U.S. registry that will be affected by this AD. The following table provides the estimated costs for U.S. operators to comply with this AD.

ESTIMATED COSTS

Action	Work hours	Average labor rate per hour	Parts	Cost per door
HFEC Inspection (required by AD 98–26–13)	1	$65	(1)	$65
Detailed Inspection as applicable (required by AD 98–26–13)	2	65	(1)	130
Optional Terminating Action (specified in AD 98–26–13)	124	65	$13,000	21,060
Detailed Inspection and HFEC Inspection as applicable (new action)	3	65	(1)	195
Replacement as applicable (new action)	120	65	17,724	25,524

[1] None.

Authority for This Rulemaking

Title 49 of the United States Code specifies the FAA's authority to issue rules on aviation safety. Subtitle I, Section 106, describes the authority of the FAA Administrator. Subtitle VII, Aviation Programs, describes in more detail the scope of the Agency's authority.

We are issuing this rulemaking under the authority described in Subtitle VII, Part A, Subpart III, Section 44701, ''General requirements.'' Under that section, Congress charges the FAA with promoting safe flight of civil aircraft in air commerce by prescribing regulations for practices, methods, and procedures the Administrator finds necessary for safety in air commerce. This regulation is within the scope of that authority because it addresses an unsafe condition that is likely to exist or develop on products identified in this rulemaking action.

Regulatory Findings

We have determined that this AD will not have federalism implications under Executive Order 13132. This AD will not have a substantial direct effect on the States, on the relationship between the national government and the States, or on the distribution of power and responsibilities among the various levels of government.

For the reasons discussed above, I certify that this AD:

(1) Is not a ''significant regulatory action'' under Executive Order 12866;

(2) Is not a ''significant rule'' under DOT Regulatory Policies and Procedures (44 FR 11034, February 26, 1979); and

(3) Will not have a significant economic impact, positive or negative, on a substantial number of small entities under the criteria of the Regulatory Flexibility Act.

We prepared a regulatory evaluation of the estimated costs to comply with this AD. *See* the **ADDRESSES** section for a location to examine the regulatory evaluation.

List of Subjects in 14 CFR Part 39

Air transportation, Aircraft, Aviation safety, Incorporation by reference, Safety.

Adoption of the Amendment

■ Accordingly, under the authority delegated to me by the Administrator, the FAA amends 14 CFR part 39 as follows:

PART 39—AIRWORTHINESS DIRECTIVES

■ 1. The authority citation for part 39 continues to read as follows:

Authority: 49 U.S.C. 106(g), 40113, 44701.

§ 39.13 [Amended]

■ 2. The FAA amends § 39.13 by removing amendment 39–10954 (63 FR 70316, December 21, 1998), and by adding the following new airworthiness directive (AD):

2005–10–18 Boeing: Amendment 39–14095. Docket No. FAA–2004–19796; Directorate Identifier 2004–NM–61–AD.

Effective Date

(a) This AD becomes effective June 23, 2005.

Affected ADs

(b) This AD supersedes AD 98–26–13, amendment 39–10954.

Applicability

(c) This AD applies to Boeing Model 747–100, –100B, –100B SUD, –200B, –200C, –300, –400, and –400D series airplanes; and Model 747SR series airplanes; having line numbers 1 through 1301 inclusive; certificated in any category.

Unsafe Condition

(d) This AD was prompted by reports of main entry door (MED) 3 having certain stop support fittings that are susceptible to stress corrosion cracking. We are issuing this AD to detect and correct stress corrosion cracking of the stop support fittings of the MEDs, which could result in damage to the adjacent forward edge frame of the door and consequent loss of a MED and rapid decompression of the airplane.

Compliance

(e) You are responsible for having the actions required by this AD performed within the compliance times specified, unless the actions have already been done.

Requirements of AD 98–26–13

Inspections and Corrective Action

(f) For Model 747–100, –100B, –100B SUD, –200, –200B, –200C, –300, –400, and 747SR series airplanes having line numbers 1 through 830 inclusive: Within 18 months after January 25, 1999 (the effective date of AD 98–26–13, amendment 39–10954), perform a high frequency eddy current (HFEC) inspection to determine the material type of the stop support fittings of the MEDs, in accordance with the Accomplishment Instructions of Boeing Service Bulletin 747–53–2358, dated August 26, 1993; or Boeing Service Bulletin 747–53–2358, Revision 1, dated April 19, 2001. Perform the inspection only at those locations where the material type of the stop support fittings is unknown, as specified in Figure 3, Table 1, of either service bulletin. As of the effective date of this AD, do the actions in accordance with Boeing Service Bulletin 747–53–2358, Revision 1, dated April 19, 2001.

(1) If the fitting is made from 7075–T73 or 7050–T7451 material, no further action is required by this AD for that fitting; however, the requirements of paragraph (l) of this AD still apply.

(2) If the fitting is not made from 7075–T73 or 7050–T7451 material, before further flight, perform a detailed inspection to detect cracks of the stop support fitting of the MEDs, in accordance with the applicable service bulletin.

Note 1: For the purposes of this AD, a detailed inspection is ''an intensive examination of a specific item, installation, or assembly to detect damage, failure, or irregularity. Available lighting is normally supplemented with a direct source of good lighting at an intensity deemed appropriate. Inspection aids such as mirrors magnifying lenses, etc. may be necessary. Surface cleaning and elaborate procedures may be required.''

(i) If no crack is detected, repeat the detailed inspection thereafter at intervals not to exceed 36 months or 2,000 flight cycles, whichever occurs first.

(ii) If any crack is detected, before further flight, replace the fitting with a stop support fitting made from 7075–T73 or 7050–T7451 material, in accordance with the applicable service bulletin.

(g) For Model 747–100, –100B, –100B SUD, –200, –200B, –200C, –300, –400, and 747SR series airplanes having line numbers 1 through 830 inclusive: Replacement of the stop support fitting of the MEDs with a stop support fitting made from 7075–T73 material, in accordance with Boeing Service Bulletin 747–53–2358, dated August 26, 1993; or replacement with a stop support fitting made from 7075–T73 or 7050–T7451 material, in accordance with Boeing Service Bulletin 747–53–2358, Revision 1, dated April 19, 2001; constitutes terminating action for the repetitive inspection requirements of paragraph (f) of this AD for the replaced fitting. As of the effective date of this AD, only Boeing Service Bulletin 747–53–2358, Revision 1, dated April 19, 2001, may be used.

New Requirements of This AD

Note 2: Operators are not required to remove foam and inspect/drill drain holes as specified in Paragraph 3.B.1.e. and the Notes of the Accomplishment Instructions of Boeing Special Attention Service Bulletin 747–53–2485, dated January 8, 2004, when doing any inspection required by paragraphs (h), (i), and (k) of this AD.

Inspection for Material Type

(h) For Model 747–100, –100B, –100B SUD, –200B, –200C, –300, –400, and –400D series airplanes, and Model 747SR series airplanes, having line numbers 1 through 830 inclusive on which the actions specified in the Accomplishment Instructions of Boeing Service Bulletin 747–53–2358, dated August 26, 1993; or Boeing Service Bulletin 747–53–2358, Revision 1, dated April 19, 2001; have been done: Do the inspection specified in paragraph (h)(1) or (h)(2) of this AD, as applicable, at the time specified.

(1) Except as provided by paragraph (h)(2) of this AD, if any stop support fitting, 2L through 6L and 2R through 6R, of MED 3, was replaced before the effective date of this AD: Perform a one-time HFEC inspection to determine the material type of the stop support fittings of MED 3 that were replaced, in accordance with the Accomplishment Instructions of Boeing Special Attention

Service Bulletin 747–53–2485, dated January 8, 2004, at the later of the times specified in paragraphs (h)(1)(i) and (h)(1)(ii) of this AD.

(i) Within 72 months after the stop support fitting of MED 3 was replaced.

(ii) Within 18 months after the effective date of this AD.

(2) If any stop support fitting, 2L through 6L and 2R through 6R, of MED 3, cannot be determined conclusively by reviewing airplane maintenance records that the fitting was not replaced, within 18 months after the effective date of this AD, perform a one-time HFEC inspection to determine the material type of the stop support fitting, in accordance with the Accomplishment Instructions of Boeing Special Attention Service Bulletin 747–53–2485, dated January 8, 2004.

(i) For airplanes having line numbers 831 through 1301 inclusive: At the later of the times specified in paragraphs (i)(1) and (i)(2) of this AD, perform a one-time HFEC inspection to determine the material type of the stop support fittings of MED 3 in accordance with the Accomplishment Instructions of Boeing Special Attention Service Bulletin 747–53–2485, dated January 8, 2004.

(1) Before 72 months since the date of issuance of the original Airworthiness Certificate or the date of issuance of the original Export Certificate of Airworthiness.

(2) Within 18 months after the effective date of this AD.

No Further Action

(j) If, during any HFEC inspection required by paragraph (h) or (i) of this AD, any fitting is found to be made of 7075–T73 or 7050–T7451 material, no further action is required by this AD for that fitting; however, paragraph (l) of this AD still applies.

Initial and Repetitive Inspections for Cracking and Corrective Action

(k) If, during any HFEC inspection required by paragraph (h) or (i) of this AD, any fitting is found not to be made of 7075–T73 or 7050–T7451 material, before further flight, perform a detailed inspection for cracks of the fitting in accordance with the Accomplishment Instructions of Boeing Special Attention Service Bulletin 747–53–2485, dated January 8, 2004.

(1) If no crack is detected, repeat the detailed inspection specified in paragraph (k) of this AD thereafter at intervals not to exceed 36 months or 2,000 flight cycles, whichever comes first. Doing the replacement specified in paragraph (k)(2) of this AD ends the repetitive inspections for the replaced fitting.

(2) If any crack is detected, before further flight, replace the fitting with a fitting made of 7075–T73 or 7050–T7451 material in accordance with the Accomplishment Instructions of Boeing Special Attention Service Bulletin 747–53–2485, dated January 8, 2004. No further action is required by this AD for that fitting; however, paragraph (l) of this AD still applies.

Parts Installation

(l) As of the date specified in paragraph (l)(1) or (l)(2) of this AD, as applicable, no person shall install on any airplane a stop support fitting of the MEDs made from either 7079–T651 or 7075–T651 material.

(1) For airplanes having line numbers 1 through 830 inclusive: As of January 25, 1999.

(2) For airplanes having line numbers 831 through 1301 inclusive: As of the effective date of this AD.

Alternative Methods of Compliance (AMOCs)

(m)(1) The Manager, Seattle Aircraft Certification Office (ACO), FAA, has the authority to approve AMOCs for this AD, if requested using the procedures found in 14 CFR 39.19.

(2) AMOCs, approved previously per AD 98–26–13, amendment 39–10954, are approved as AMOCs with paragraph (f) or (g) of this AD, as applicable. However, any stop support fitting, 2L through 6L and 2R through 6R, of MED 3 that was replaced is still required to be inspected as required in paragraph (h) of this AD.

Material Incorporated by Reference

(n) You must use the service information that is specified in Table 1 of this AD to perform the actions that are required by this AD, unless the AD specifies otherwise.

(1) The Director of the Federal Register approves the incorporation by reference of Boeing Service Bulletin 747–53–2358, Revision 1, dated April 19, 2001; and Boeing Special Attention Service Bulletin 747–53–2485, dated January 8, 2004; in accordance with 5 U.S.C. 552(a) and 1 CFR part 51.

(2) The Director of the Federal Register previously approved the incorporation by reference of Boeing Service Bulletin 747–53–2358, dated August 26, 1993, as of January 25, 1999 (63 FR 70316, December 21, 1998).

(3) To get copies of the service information, go to Boeing Commercial Airplanes, P.O. Box 3707, Seattle, Washington 98124–2207. To view the AD docket, go to the Docket Management Facility, U.S. Department of Transportation, 400 Seventh Street SW., room PL–401, Nassif Building, Washington, DC. To review copies of the service information, go to the National Archives and Records Administration (NARA). For information on the availability of this material at the NARA, call (202) 741–6030, or go to *http://www.archives.gov/federal_register/code_of_federal_regulations/ibr_locations.html.*

TABLE 1.—MATERIAL INCORPORATED BY REFERENCE

Service bulletin	Revision level	Date
Boeing Service Bulletin 747–53–2358	Original	August 26, 1993.
Boeing Service Bulletin 747–53–2358	1	April 19, 2001.
Boeing Special Attention Service Bulletin 747–53–2485	Original	January 8, 2004.

Issued in Renton, Washington, on May 9, 2005.

Jeffrey E. Duven,

Acting Manager, Transport Airplane Directorate, Aircraft Certification Service.

[FR Doc. 05–9876 Filed 5–18–05; 8:45 am]

BILLING CODE 4910–13–P

DEPARTMENT OF TRANSPORTATION

Federal Aviation Administration

14 CFR Part 39

[Docket No. FAA–2004–19538; Directorate Identifier 2003–NM–99–AD; Amendment 39–14098; AD 2005–10–21]

RIN 2120–AA64

Airworthiness Directives; Boeing Model 747 Airplanes

AGENCY: Federal Aviation Administration (FAA), Department of Transportation (DOT).

ACTION: Final rule.

SUMMARY: The FAA is superseding an existing airworthiness directive (AD), which applies to certain Boeing Model 747 airplanes. That AD currently requires inspections to detect cracks in the front spar pressure bulkhead chord, and repair if necessary. This new AD requires repetitive high frequency eddy current (HFEC) inspections of the body station (BS) 1000 bulkhead chord for cracks, repetitive detailed inspections of the bathtub fittings, if installed, for cracks, and corrective action if necessary. Initiation of the new inspections ends the inspections of the existing AD. This AD also revises the applicability of the existing AD to include additional airplanes. This AD is

prompted by reports of cracks in the BS 1000 bulkhead chord. We are issuing this AD to detect and correct fatigue cracks in the BS 1000 bulkhead chord, which, if not repaired before they reach critical length, could result in the failure of the adjacent structure and skin and lead to in-flight depressurization of the airplane.

DATES: This AD becomes effective June 23, 2005.

The incorporation by reference of Boeing Alert Service Bulletin 747–53A2471, dated March 27, 2003; and Boeing Service Bulletin 747–53–2064, Revision 4, including Addendum, dated September 23, 1983; as listed in the regulations; is approved by the Director of the Federal Register as of June 23, 2005.

ADDRESSES: For service information identified in this AD, contact Boeing Commercial Airplanes, P.O. Box 3707, Seattle, Washington 98124–2207. You can examine this information at the National Archives and Records Administration (NARA). For information on the availability of this material at NARA, call (202) 741–6030, or go to: *http://www.archives.gov/federal_register/code_of_federal_regulations/ibr_locations.html.*

Docket: The AD docket contains the proposed AD, comments, and any final disposition. You can examine the AD docket on the Internet at *http://dms.dot.gov,* or in person at the Docket Management Facility office between 9 a.m. and 5 p.m., Monday through Friday, except Federal holidays. The Docket Management Facility office (telephone (800) 647–5227) is located on the plaza level of the Nassif Building at the U.S. Department of Transportation, 400 Seventh Street SW., room PL–401, Washington, DC. This docket number is FAA–2004–19538; the directorate identifier for this docket is 2003–NM–99–AD.

FOR FURTHER INFORMATION CONTACT: Nick Kusz, Aerospace Engineer, Airframe Branch, ANM–120S, FAA, Seattle Aircraft Certification Office, 1601 Lind Avenue, SW., Renton, Washington 98055–4056; telephone (425) 917–6432; fax (425) 917–6590.

SUPPLEMENTARY INFORMATION: The FAA proposed to amend part 39 of the Federal Aviation Regulations (14 CFR part 39) with an AD to supersede AD 90–09–09, amendment 39–6586 (55 FR 17928, April 30, 1990), for certain Boeing Model 747 airplanes (a correction of that AD was published in the **Federal Register** on May 21, 1990 (55 FR 20894)). That action, published in the **Federal Register** on November 5, 2004 (69 FR 64517), proposed to require inspections to detect cracks in the front spar pressure bulkhead chord, and repair if necessary (the actions previously required by AD 90–09–09). That action also proposed to require repetitive high frequency eddy current inspections of the body station 1000 bulkhead chord for cracks, repetitive detailed inspections of the bathtub fittings, if installed, for cracks, and corrective action, if necessary.

Comments

We provided the public the opportunity to participate in the development of this AD. We have considered the comments that have been submitted on the proposed AD.

Request To Clarify Paragraph (h); Meaning of ''All'' Actions

One commenter states that, as the proposed rule is currently written, operators would be required to replace all bathtub fittings if cracks are found at just one fitting. The operator points out that the referenced service bulletin states that operators replace only the items that are found to be cracked. However, the commenter points out that paragraph (h) of the proposed rule specifies that the corrective action must be taken by accomplishing ''all'' the actions specified in the accomplishment instructions of the service bulletin. The commenter states that a literal review and interpretation of paragraph (h) and the service bulletin could lead operators to the conclusion that all four bathtub fittings must be replaced if only one is found to be cracked.

We agree. The intent of the proposed rule was not to require operators to replace all fittings in the event that only one is found cracked. However, it is important to note that the 6,000-cycle post-modification inspection threshold is valid only if the chord is replaced along with all bathtub fittings that correspond to the side of the airplane (left or right) in which the chord was replaced. We have added a note to paragraph (h) of this final rule and revised (k) of the final rule to reflect this change. We have re-numbered the notes in the final rule accordingly.

Request To Remove Replacement Requirement

One commenter requests that we remove the requirement to replace the bathtub fittings in order to be eligible for the 6,000-cycle post-modification threshold after the chord replacement. The commenter gives several reasons for this request: There have been no reports of cracked bathtub fittings; the replacement bathtub fittings are the same material, in some cases, as the original fittings; and bathtub fittings must be removed for chord replacement, thereby allowing thorough inspections of the fittings.

We disagree. Although the commenter states otherwise, we have received reports of cracked bathtub fittings. In addition, the fact that the replacement fittings are of the same material as the original fittings does not mean that the fittings should not be replaced. Moreover, replacing all fittings, not just the damaged ones, is necessary in order to apply the 6,000-cycle post-modification threshold. Operators still have the option to replace only those bathtub fittings with detected cracking, and to continue with the 3,000-cycle inspection interval. No change to the final rule is necessary in this regard.

Request To Revise Cost Estimate

One commenter, an airplane operator having no technical objections, requests that the cost estimate be recalculated to include the work hours necessary for access and restoration. The commenter states that access and restoration can require up to 24 work hours for each airplane, and that such tasks do not occur frequently enough to warrant leaving them out of the cost estimate.

We disagree. In establishing the requirements of all ADs, we typically do not include incidental costs such as the time required to gain access and close up, planning time, or the time needed for other administrative actions. Because incidental costs may vary significantly from operator to operator, they are almost impossible to calculate. The work hours that are needed to accomplish the actions required by this AD represent the time necessary to perform only the actions actually required by this AD (that is, the inspection). No change to the final rule is necessary in this regard.

Explanation of Changes Made to the Proposed AD

We have revised the subject heading to identify model designations as published in the most recent type certificate data sheet for the affected models.

Boeing has received a Delegation Option Authorization (DOA). We have revised paragraph (l) of the final rule to delegate the authority to approve an alternative method of compliance for any repair required by this AD to the Authorized Representative for the Boeing DOA Organization.

We have also revised paragraph (i) of the final rule to allow any crack in the subject area to be repaired according to data that conform to the airplane's type

certificate and that are approved by an Authorized Representative for the Boeing DOA Organization whom we have authorized to make such findings.

Conclusion

We have carefully reviewed the available data, including the comments that have been submitted, and determined that air safety and the public interest require adopting the AD with the changes described previously. We have determined that these changes will neither increase the economic burden on any operator nor increase the scope of the AD.

Costs of Compliance

There are about 1,350 Model 747 series airplanes worldwide of the affected design. This AD affects about 245 airplanes of U.S. registry.

The actions that are required by AD 90–09–09 and retained in this AD take about 84 work hours per airplane, at an average labor rate of $65 per work hour. We estimate 102 airplanes of U.S. registry are affected by AD 90–09–09. Based on these figures, the estimated cost of the currently required actions is $556,920, or $5,460 per airplane, per inspection cycle.

The new inspections take about 14 work hours per airplane, at an average labor rate of $65 per work hour. Based on these figures, the estimated cost of the new actions specified in this AD for U.S. operators is $222,950, or $910 per airplane, per inspection cycle.

Authority for This Rulemaking

Title 49 of the United States Code specifies the FAA's authority to issue rules on aviation safety. Subtitle I, Section 106, describes the authority of the FAA Administrator. Subtitle VII, Aviation Programs, describes in more detail the scope of the Agency's authority.

We are issuing this rulemaking under the authority described in Subtitle VII, Part A, Subpart III, Section 44701, ''General requirements.'' Under that section, Congress charges the FAA with promoting safe flight of civil aircraft in air commerce by prescribing regulations for practices, methods, and procedures the Administrator finds necessary for safety in air commerce. This regulation is within the scope of that authority because it addresses an unsafe condition that is likely to exist or develop on products identified in this rulemaking action.

Regulatory Findings

We have determined that this AD will not have federalism implications under Executive Order 13132. This AD will not have a substantial direct effect on the States, on the relationship between the national government and the States, or on the distribution of power and responsibilities among the various levels of government.

For the reasons discussed above, I certify that this AD:

(1) Is not a ''significant regulatory action'' under Executive Order 12866;

(2) Is not a ''significant rule'' under DOT Regulatory Policies and Procedures (44 FR 11034, February 26, 1979); and

(3) Will not have a significant economic impact, positive or negative, on a substantial number of small entities under the criteria of the Regulatory Flexibility Act.

We prepared a regulatory evaluation of the estimated costs to comply with this AD. See the **ADDRESSES** section for a location to examine the regulatory evaluation.

List of Subjects in 14 CFR Part 39

Air transportation, Aircraft, Aviation safety, Incorporation by reference, Safety.

Adoption of the Amendment

■ Accordingly, under the authority delegated to me by the Administrator, the FAA amends 14 CFR part 39 as follows:

PART 39—AIRWORTHINESS DIRECTIVES

■ 1. The authority citation for part 39 continues to read as follows:

Authority: 49 U.S.C. 106(g), 40113, 44701.

§ 39.13 [Amended]

■ 2. The FAA amends § 39.13 by removing amendment 39–6586 (55 FR 17928, April 30, 1990), corrected at 55 FR 20894, May 21, 1990, and by adding the following new airworthiness directive (AD):

2005–10–21 Boeing: Amendment 39–14098. Docket No. FAA–2004–19538; Directorate Identifier 2003–NM–99–AD.

Effective Date

(a) This AD becomes effective June 23, 2005.

Affected ADs

(b) This AD supersedes AD 90–09–09, amendment 39–6586 (55 FR 20894, May 21, 1990).

Applicability

(c) This AD applies to Boeing Model 747 series airplanes, line numbers 1 through 1307 inclusive, 1309 through 1312 inclusive, and 1314; certificated in any category.

Unsafe Condition

(d) This AD was prompted by reports of cracks in the body station (BS) 1000 bulkhead chord. We are issuing this AD to detect and correct fatigue cracks in the BS 1000 bulkhead chord, which, if not repaired before they reach critical length, could result in the failure of the adjacent structure and skin and lead to in-flight depressurization of the airplane.

Compliance

(e) You are responsible for having the actions required by this AD performed within the compliance times specified, unless the actions have already been done.

Restatement of Requirements of AD 90–09–09

(f) For airplanes listed in Boeing Service Bulletin 747–53–2064, Revision 4, dated September 23, 1983, that have not been modified in accordance with Boeing Service Bulletin 747–53–2064, dated July 25, 1972: Within the next 1,000 landings after October 15, 1984 (the effective date of AD 84–18–06, amendment 39–4912), or prior to the accumulation of 10,000 landings, whichever occurs later, and thereafter at intervals not to exceed 7,000 landings, conduct a high frequency eddy current (HFEC) inspection of the chord to detect cracks between stringers S–37 and S–39 at the chord radius, heel, and flanges adjacent to the fastener holes identified for inspection in Boeing Service Bulletin 747–53–2064, Revision 4, dated September 23, 1983. If cracks are found in the pressure bulkhead chord, accomplish the repair in accordance with the service bulletin before further flight. Repair of cracks along the chord radius under 5 inches in length, or across a chord flange that have not severed the chord flange, may be deferred 1,000 landings by stop drilling and reinspecting for crack progression every 200 landings using HFEC. If crack progression is found, repair in accordance with the service bulletin prior to further flight. Inspections are to continue at intervals not to exceed 7,000 landings after repair.

(g) For airplanes listed in Boeing Service Bulletin 747–53–2064, Revision 4, dated September 23, 1983, that have been modified in accordance with Boeing Service Bulletin 747–53–2064, dated July 25, 1972: Within the next 1,000 landings after October 15, 1984, or prior to the accumulation of 10,000 landings after the modification, whichever is later, and thereafter at intervals not to exceed 10,000 landings, conduct an HFEC inspection to detect cracks in the front spar pressure bulkhead lower chord heel from stringers S–37 to S–39, and conduct an ultrasonic inspection to detect cracks in the fuselage skin originating at the indicated fastener holes beneath the forward drag splice fitting flanges, in accordance with the service bulletin. If any cracks are found, repair in accordance with Boeing Service Bulletin 747–53–2064, Revision 4, dated September 23, 1983, before further flight. Inspections are to continue at intervals not to exceed 10,000 landings after repair.

New Requirements of This AD

Initial Inspections

(h) At the later of the times specified in paragraph (h)(1), (h)(2), or (h)(3) of this AD: Except as provided by paragraph (i) of this

AD, perform an HFEC inspection of BS 1000 bulkhead chord for cracks, a detailed inspection of the bathtub fittings, if installed, for cracks, and corrective action, as applicable, by accomplishing all the actions specified in the Accomplishment Instructions of Boeing Alert Service Bulletin 747–53A2471, dated March 27, 2003. Any applicable corrective action must be done before further flight. Corrective actions include replacing only those bathtub fittings that are found to be cracked. Accomplishment of the HFEC and detailed inspections required by this paragraph ends the requirements of paragraphs (f) and (g) of this AD.

Note 1: The 6,000-cycle post-modification inspection threshold in paragraph (k) of this AD is valid only if the chord is replaced along with all bathtub fittings corresponding to the side of the airplane (left or right) in which the chord was replaced.

Note 2: For the purposes of this AD, a detailed inspection is ''an intensive examination of a specific item, installation, or assembly to detect damage, failure, or irregularity. Available lighting is normally supplemented with a direct source of good lighting at an intensity deemed appropriate. Inspection aids such as mirrors, magnifying lenses, etc., may be necessary. Surface cleaning and elaborate procedures may be required.''

(1) Prior to the accumulation of 10,000 total flight cycles.

(2) Within 18 months after the effective date of this AD.

(3) For airplanes on which the repair (*i.e.*, chord replacement) has been accomplished in accordance with Boeing Service Bulletin 747–53–2362, dated March 26, 1992, or in accordance with paragraph (f) or (g) of this AD (*i.e.*, per Boeing Service Bulletin 747–53–2064, Revision 4, dated September 23, 1983): Within 3,000 flight cycles after the replacement was accomplished.

Note 3: Repairs (*i.e.*, chord replacement) accomplished prior to the effective date of this AD in accordance with Boeing Service Bulletin 747–53–2064, Revision 1, dated May 18, 1973; Revision 2, dated February 22, 1974; Revision 3, dated September 13, 1974; Revision 5, dated July 23, 1987; or Revision 6, dated June 22, 1989; are also considered to be applicable to the inspection threshold specified in paragraph (h)(3) of this AD.

(i) If any crack is found during any inspection required by paragraph (h) of this AD, and Boeing Alert Service Bulletin 747–53A2471, dated March 27, 2003, specifies contacting Boeing for additional information: Before further flight, repair according to a method approved by the Manager, Seattle Aircraft Certification Office (ACO), FAA; or according to data meeting the certification basis of the airplane approved by an Authorized Representative for the Boeing Delegation Option Authorization Organization who has been authorized by the Manager, Seattle ACO, to make those findings. For a repair method to be approved, the repair must meet the certification basis of the airplane, and the approval must specifically reference this AD.

Repetitive Inspections

(j) Except as provided by paragraph (k) of this AD, repeat the inspections required by paragraph (h) of this AD thereafter at intervals not to exceed 3,000 flight cycles.

(k) For the side of the airplane on which the chord and all corresponding bathtub fittings for that side of the airplane (left or right) were replaced in accordance with the Accomplishment Instructions of Boeing Alert Service Bulletin 747–53A2471, dated March 27, 2003: Repeat the inspections required by paragraph (h) of this AD within 6,000 flight cycles after accomplishing replacement of the chord and bathtub fittings. Thereafter repeat the inspections at intervals not to exceed 3,000 flight cycles.

Alternative Methods of Compliance (AMOC)

(l)(1) In accordance with 14 CFR 39.19, the Manager, Seattle ACO, FAA, is authorized to approve AMOCs for this AD.

(2) AMOCs, approved previously in accordance with AD 90–09–09, amendment 39–6586, are approved as AMOCs to paragraph (f) or (g) of this AD, as applicable.

(3) An AMOC that provides an acceptable level of safety may be used for any repair required by this AD, if it is approved by an Authorized Representative for the Boeing Delegation Option Authorization Organization who has been authorized by the Manager, Seattle ACO, to make those findings. For a repair method to be approved, the approval must specifically refer to this AD.

Material Incorporated by Reference

(m) You must use Boeing Alert Service Bulletin 747–53A2471, dated March 27, 2003; and Boeing Service Bulletin 747–53–2064, Revision 4, including Addendum, dated September 23, 1983; as applicable, to perform the actions that are required by this AD, unless the AD specifies otherwise. The Director of the Federal Register approves the incorporation by reference of this document in accordance with 5 U.S.C. 552(a) and 1 CFR part 51. For copies of the service information, contact Boeing Commercial Airplanes, P.O. Box 3707, Seattle, Washington 98124–2207.

You may view the AD docket at the Docket Management Facility, U.S. Department of Transportation, 400 Seventh Street SW, room PL–401, Nassif Building, Washington, DC. To review copies of the service information, go the National Archives and Records Administration (NARA). For information on the availability of this material at the NARA, call (202) 741–6030, or go to *http://www.archives.gov/federal_register/code_of_federal_regulations/ibr_locations.html.*

Issued in Renton, Washington, on May 11, 2005.

Jeffrey E. Duven,

Acting Manager, Transport Airplane Directorate, Aircraft Certification Service.

[FR Doc. 05–9880 Filed 5–18–05; 8:45 am]

BILLING CODE 4910–13–P

DEPARTMENT OF TRANSPORTATION

Federal Aviation Administration

14 CFR Part 39

[Docket No. FAA–2005–21238; Directorate Identifier 2005–NE–12–AD; Amendment 39–14093; AD 2005–10–16]

RIN 2120–AA64

Airworthiness Directives; General Electric (GE) CF6–80E1 Series Turbofan Engines

AGENCY: Federal Aviation Administration (FAA), DOT.

ACTION: Final rule; request for comments.

SUMMARY: The FAA is adopting a new airworthiness directive (AD) for General Electric (GE) CF6–80E1 series turbofan engines that have an electronic control unit (ECU) with software version E.1.M. or earlier installed. This AD requires installing improved software for the ECU. This AD results from an uncommanded engine acceleration event caused by a failure of the ECU digital interface unit (DIU). We are issuing this AD to prevent an undetected failure of the ECU DIU, which could result in uncommanded acceleration to the overspeed limit without response to throttle commands. The airplane could then experience asymmetric thrust.

DATES: This AD becomes effective June 3, 2005. The Director of the Federal Register approved the incorporation by reference of certain publications listed in the regulations as of June 3, 2005.

We must receive any comments on this AD by July 18, 2005.

ADDRESSES: Use one of the following addresses to comment on this AD.

- DOT Docket Web site: Go to *http://dms.dot.gov* and follow the instructions for sending your comments electronically.
- Government-wide rulemaking Web site: Go to *http://www.regulations.gov* and follow the instructions for sending your comments electronically.
- Mail: Docket Management Facility; U.S. Department of Transportation, 400 Seventh Street, SW., Nassif Building, Room PL–401, Washington, DC 20590–001.
- Fax: (202) 493–2251.
- Hand Delivery: Room PL–401 on the plaza level of the Nassif Building, 400 Seventh Street, SW., Washington, DC, between 9 a.m. and 5 p.m., Monday through Friday, except Federal holidays.

Contact General Electric Company via Lockheed Martin Technology Services, Lockheed Martin Technical Services,

Distribution Center, 1330 Kemper Meadow Drive, Suite 110–C, Cincinnati, Ohio 45240, telephone (513) 672–8400; fax (513) 672–8422, or E-mail: *lmco_distribution@ae.ge.com* for the service information identified in this AD; or

Sign on to the GEAE Customer Web Center (CWC): *https://customer.geae.com.*

FOR FURTHER INFORMATION CONTACT: Karen Curtis, Aerospace Engineer, Engine Certification Office, FAA, Engine and Propeller Directorate, 12 New England Executive Park, Burlington, MA 01803; telephone (781) 238–7192; fax (781) 238–7199.

SUPPLEMENTARY INFORMATION: In June 2003, a CF6–80E1 engine experienced an uncommanded acceleration and did not respond to throttle commands during cruise. The pilot shut down the engine by switching off the master lever. GE investigated the uncommanded acceleration and confirmed that failure of the ECU DIU caused the event. This failure corrupted all the digital interfaces with the airplane, ECU pressure subsystem, and opposite ECU channel. The ECU used a default ambient pressure value, which scheduled fuel flow to a higher than intended value. In addition, the DIU failure corrupted the channel-health and channel-activity data communication between channels and allowed the failed channel to remain active while the healthy channel became active. The existing ECU software logic did not detect and record the DIU fault and did not ensure control of the engine by the healthy channel. Failure of the DIU, if not detected, could result in an uncommanded engine acceleration to the overspeed limit, without response to throttle commands. The airplane may then experience asymmetric thrust.

Relevant Service Information

We have reviewed and approved the technical contents of GE Aircraft Engines CF6–80E1 Service Bulletin (SB) 73–0070, dated June 22, 2004, and SB 73–0070, Revision 01, dated March 21, 2005, that describe procedures for uploading new software E.1.N. to the ECU.

FAA's Determination and Requirements of This AD

Although no airplanes that are registered in the United States use these engines, the possibility exists that these engines could be used on airplanes that are registered in the United States in the future. The unsafe condition described previously is likely to exist or develop on other GE CF6–80E series turbofan engines of the same type design that have an ECU with software version E.1.M or earlier installed. We are issuing this AD to prevent undetected failure of the ECU DIU. This AD requires installing improved ECU software version E.1.N at the next ECU exposure. You must use the service information described previously to perform the actions required by this AD.

FAA's Determination of the Effective Date

Since there are currently no domestic operators of these GE CF6–80E1 series turbofan engines, notice and opportunity for public comment before issuing this AD are unnecessary. A situation exists that allows the immediate adoption of this regulation.

Comments Invited

This AD is a final rule that involves requirements affecting flight safety and was not preceded by notice and an opportunity for public comment; however, we invite you to send us any written relevant data, views, or arguments regarding this AD. Send your comments to an address listed under **ADDRESSES**. Include ''AD Docket No. 2005–10–16, FAA–2005–21238; Directorate Identifier 2005–NE–12–AD'' in the subject line of your comments. We specifically invite comments on the overall regulatory, economic, environmental, and energy aspects of the rule that might suggest a need to modify it.

We will post all comments we receive, without change, to *http://dms.dot.gov,* including any personal information you provide. We will also post a report summarizing each substantive verbal contact with FAA personnel concerning this AD. Using the search function of the DMS web site, anyone can find and read the comments in any of our dockets, including the name of the individual who sent the comment (or signed the comment on behalf of an association, business, labor union, etc.). You may review the DOT's complete Privacy Act Statement in the **Federal Register** published on April 11, 2000 (65 FR 19477–78) or you may visit *http://dms.dot.gov.*

Examining the AD Docket

You may examine the docket that contains the AD, any comments received, and any final disposition in person at the DMS Docket Offices between 9:00 a.m. and 5:00 p.m., Monday through Friday, except Federal holidays. The Docket Office (telephone (800) 647–5227) is located on the plaza level of the Department of Transportation Nassif Building at the street address stated in **ADDRESSES**. Comments will be available in the AD docket shortly after the DMS receives them.

Authority for This Rulemaking

Title 49 of the United States Code specifies the FAA's authority to issue rules on aviation safety. Subtitle I, Section 106, describes the authority of the FAA Administrator. Subtitle VII, Aviation Programs, describes in more detail the scope of the Agency's authority.

We are issuing this rulemaking under the authority described in Subtitle VII, Part A, Subpart III, Section 44701, ''General requirements.'' Under that section, Congress charges the FAA with promoting safe flight of civil aircraft in air commerce by prescribing regulations for practices, methods, and procedures the Administrator finds necessary for safety in air commerce. This regulation is within the scope of that authority because it addresses an unsafe condition that is likely to exist or develop on products identified in this rulemaking action.

Regulatory Findings

We have determined that this AD will not have federalism implications under Executive Order 13132. This AD will not have a substantial direct effect on the States, on the relationship between the national Government and the States, or on the distribution of power and responsibilities among the various levels of government.

For the reasons discussed above, I certify that the regulation:

1. Is not a ''significant regulatory action'' under Executive Order 12866;
2. Is not a ''significant rule'' under the DOT Regulatory Policies and Procedures (44 FR 11034, February 26, 1979); and
3. Will not have a significant economic impact, positive or negative, on a substantial number of small entities under the criteria of the Regulatory Flexibility Act.

We prepared a summary of the costs to comply with this AD and placed it in the AD Docket. You may get a copy of this summary at the address listed under **ADDRESSES**.

List of Subjects in 14 CFR Part 39

Air transportation, Aircraft, Aviation safety, Incorporation by reference, Safety.

Adoption of the Amendment

■ Under the authority delegated to me by the Administrator, the Federal Aviation Administration amends part 39 of the Federal Aviation Regulations (14 CFR part 39) as follows:

PART 39—AIRWORTHINESS DIRECTIVES

■ 1. The authority citation for part 39 continues to read as follows:

Authority: 49 U.S.C. 106(g), 40113, 44701.

§ 39.13 [Amended]

■ 2. The FAA amends § 39.13 by adding the following new airworthiness directive:

2005–10–16 General Electric Company: Amendment 39–14093. Docket No. FAA–2005–21238; Directorate Identifier 2005–NE–12–AD.

Effective Date

(a) This airworthiness directive (AD) becomes effective June 3, 2005.

Affected ADs

(b) None.

Applicability

(c) This AD applies to all General Electric (GE) CF6–80E1 series turbofan engines with electronic control unit (ECU) part numbers (P/N's) 1799M99P12, 1851M74P05, 1851M80P05, and 1960M84P03 or earlier installed. These (GE) CF6–80E1 series engines are installed on, but not limited to, Airbus Industrie (AI) A330 airplanes.

Unsafe Condition

(d) This AD results from an uncommanded engine acceleration event caused by a failure of the ECU digital interface unit (DIU). We are issuing this AD to prevent undetected failure of the ECU DIU, which could result in uncommanded acceleration to the overspeed limit without response to throttle commands. The airplane could then experience asymmetric thrust.

Compliance

(e) You are responsible for having the actions required by this AD performed within the compliance times specified unless the actions have already been done.

GE CF6–80E1A4/B Engines

(f) For GE CF6–80E1A4/B engines with ECU's that already have software version E.1.N installed, no further action is required.

All Other CF6–80E1 Series Turbofan Engines

(g) At next ECU exposure, upload improved software version E.1.N. Use the Accomplishment Instructions of either of GE Aircraft Engines CF6–80E1 Service Bulletin (SB) 73–0070, dated June 22, 2004, or SB 73–0070, Revision 01, dated March 21, 2005.

(h) For the purposes of this AD, the next ECU exposure is defined as the next removal of the ECU for repair, or the next engine shop visit, whichever occurs sooner.

(i) After the effective date of this AD, do not install any ECU that has a software version earlier than E.1.N onto any engine.

Alternative Methods of Compliance

(j) The Manager, Engine Certification Office, has the authority to approve alternative methods of compliance for this AD if requested using the procedures found in 14 CFR 39.19.

Related Information

(k) None.

Material Incorporated by Reference

(l) You must use of General Electric (GE) Aircraft Engines CF6–80E1 Service Bulletin (SB) 73–0070, dated June 22, 2004, or SB 73–0070, Revision 01, dated March 21, 2005 to install the updated software required by this AD. The Director of the Federal Register approved the incorporation by reference of this service bulletin in accordance with 5 U.S.C. 552(a) and 1 CFR part 51. Contact General Electric Company via Lockheed Martin Technology Services, Lockheed Martin Technical Services, Distribution Center, 1330 Kemper Meadow Drive, Suite 110–C, Cincinnati, Ohio 45240, telephone (513) 672–8400; fax (513) 672–8422, or e-mail: *lmco_distribution@ae.ge.com* for the service information identified in this AD; or

Go to the GEAE Customer Web Center (CWC): *https://customer.geae.com.* You may review copies at the Docket Management Facility; U.S. Department of Transportation, 400 Seventh Street, SW., Nassif Building, Room PL–401, Washington, DC 20590–001, on the Internet at *http://dms.dot.gov,* or at the National Archives and Records Administration (NARA).

For information on the availability of this material at NARA, call 202–741–6030, or go to: *http://www.archives.gov/federal_register/code_of_federal_regulations/ibr_locations.html.*

Issued in Burlington, Massachusetts, on May 12, 2005.

Robert Ganley,

Acting Manager, Engine and Propeller Directorate, Aircraft Certification Service.

[FR Doc. 05–9887 Filed 5–18–05; 8:45 am]

BILLING CODE 4910–13–P

NATIONAL AERONAUTICS AND SPACE ADMINISTRATION

14 CFR Parts 1260, 1273, and 1274

RIN 2700–AD11

NASA Grant and Cooperative Agreement Handbook—Research Misconduct

AGENCY: National Aeronautics and Space Administration.

ACTION: Final rule.

SUMMARY: This final rule amends several of the NASA Grant and Cooperative Agreement Handbook sections, which are all entitled, ''Definitions,'' to include Research Misconduct as a defined term. In addition, provisions would be added to implement NASA's requirements on research misconduct.

DATES: *Effective Date:* May 19, 2005.

FOR FURTHER INFORMATION CONTACT: Paul Brundage, NASA Headquarters, Code HC, Washington, DC, (202) 358–0481, e-mail: *paul.d.brundage@nasa.gov.*

SUPPLEMENTARY INFORMATION:

A. Background

NASA published a final rule in the **Federal Register** at 69 FR 42102 on July 14, 2004, (see 14 CFR part 1275), which defined and established policy and procedures regarding research misconduct. This final rule implements those polices and procedures for grants and cooperative agreements.

B. Regulatory Flexibility Act

NASA certifies that this final rule will not have a significant economic impact on a substantial number of small entities within the meaning of the Regulatory Flexibility Act, 5 U.S.C. 601 *et seq.*, because the changes will affect an insignificant number of grants and cooperative agreements.

C. Paperwork Reduction Act

The Paperwork Reduction Act does not apply because this rule does not impose any new recordkeeping or information collection requirements, or collection of information from offerors, contractors, or members of the public that require the approval of the Office of Management (OMB) and Budget under 44 U.S.C. 3501, *et seq.*

List of Subjects in 14 CFR Parts 1260, 1273, and 1274

Grant Programs—Science and technology.

Tom Luedtke,

Assistant Administrator for Procurement.

■ Accordingly, 14 CFR parts 1260, 1273, and 1274 are amended as follows:

PART 1260—GRANTS AND COOPERATIVE AGREEMENTS

■ 1. The authority citation for 14 CFR part 1260 continues to read as follows:

Authority: 42 U.S.C. 2473(c)(1), Pub. L. 97–258, 96 Stat. 1003 (31 U.S.C. 6301, *et seq.*), and OMB Circular A–110.

■ 2. Add § 1260.40 to read as follows:

§ 1260.40 Investigation of Research Misconduct.

Investigation of Research Misconduct (May 2005)

Recipients of this grant or cooperative agreement are subject to the requirements of 14 CFR part 1275, ''Investigation of Research Misconduct.''

[End of provision]

■ 3. Amend § 1260.102 by adding the definition for ''Research misconduct'' after ''Research and development'' to read as follows:

§ 1260.102 Definitions.

* * * * *

Research misconduct is defined in 14 CFR 1275.101. NASA policies and procedures regarding Research misconduct are set out in 14 CFR part 1275, ''Investigation of Research Misconduct.''

* * * * *

PART 1273—GRANTS AND COOPERATIVE AGREEMENTS

■ 4. The authority citation for 14 CFR part 1273 continues to read as follows:

Authority: 42 U.S.C. 2451, *et seq.,* and 31 U.S.C. 6301 to 6308.

■ 5. Amend § 1273.3 by adding the definition for ''Research misconduct'' after ''Real property'' to read as follows:

§ 1273.3 Definitions.

* * * * *

Research misconduct is defined in 14 CFR 1275.101. NASA policies and procedures regarding Research misconduct are set out in 14 CFR part 1275, ''Investigation of Research Misconduct.''

* * * * *

PART 1274—GRANTS AND COOPERATIVE AGREEMENTS

■ 6. The authority citation for 14 CFR part 1274 continues to read as follows:

Authority: 42 U.S.C. 2451, *et seq.,* and 31 U.S.C. 6301 to 6308.

■ 7. Amend § 1274.103 by adding the definition for ''Research misconduct'' after ''Recipient'' to read as follows:

§ 1274.103 Definitions.

* * * * *

Research misconduct is defined in 14 CFR 1275.101. NASA policies and procedures regarding Research misconduct are set out in 14 CFR part 1275, ''Investigation of Research Misconduct.''

* * * * *

■ 8. Add § 1274.943 to read as follows:

§ 1274.943 Investigation of Research Misconduct.

Investigation of Research Misconduct (May 2005)

Recipients of this cooperative agreement are subject to the requirements of 14 CFR part 1275, ''Investigation of Research Misconduct.''

[End of provision]

[FR Doc. 05–9952 Filed 5–18–05; 8:45 am]

BILLING CODE 7510–01–P

SOCIAL SECURITY ADMINISTRATION

20 CFR Part 404

[Regulation No. 4]

RIN 0960–AF62

Amendments to Annual Earnings Test for Retirement Beneficiaries

AGENCY: Social Security Administration.

ACTION: Final rules.

SUMMARY: These final rules amend our regulations to conform to the ''Senior Citizens' Freedom to Work Act of 2000.'' This legislation was enacted on April 7, 2000, and became retroactively effective on January 1, 2000. It eliminates the Social Security annual earnings test for retirement beneficiaries, starting from the month in which they reach full retirement age. Before the passage of this legislation, persons reaching full retirement age were subject to an earnings test until the month in which they attained age 70.

DATES: *Effective Date:* These rules are effective June 20, 2005.

FOR FURTHER INFORMATION CONTACT: Dorothy Skipwith, Social Insurance Specialist, Office of Income Security Programs, Social Security Administration, Cubicle # 128, RRCC, 6401 Security Boulevard, Baltimore, Maryland 21235–6401, 410–965–4231 or TTY 410–966–5609. For information on eligibility or filing for benefits: Call our national toll-free numbers, 1–800–772–1213 or TTY 1–800–325–0078, or visit our Internet web site, Social Security Online, at *http://www.socialsecurity.gov.*

Electronic Version: The electronic file of this document is available on the date of publication in the **Federal Register** on the Internet site for the Government Printing Office, *http://www.gpoaccess.gov/fr/index.html.* It is also available on the Internet site for SSA (*i.e.,* Social Security Online) at *http://www.socialsecurity.gov/regulations/final-rules.htm.*

SUPPLEMENTARY INFORMATION:

Background

In addition to the revisions required by the ''Senior Citizens' Freedom to Work Act of 2000,'' which eliminated the annual earnings test for persons reaching full retirement age, we have made changes necessitated by the ''Social Security Amendments of 1983,'' Public Law 98–21. This legislation increases the full retirement age for persons born in 1938 or later in incremental amounts, with a full 2-year increase in full retirement age for persons born in 1960 or later. We have also revised the existing regulatory sections to present them in plain language and to update the examples.

Explanation of Changes

The following is a brief summary of the sections we have revised and the changes to each of them.

Section 404.338 Widow's and widower's benefits amounts. This section describes the benefit amount a widow or widower may expect to receive relative to the benefit amount of the deceased insured spouse. The benefit amount for the widow or widower may include increased benefits based on delayed retirement credit of the deceased insured spouse, or reduced benefits based on the deceased insured spouse retiring before reaching full retirement age. This section also discusses widow or widower benefits based on a special primary insurance amount when the insured died before reaching age 62.

We have revised this section to reflect the change in full retirement age.

Sections 404.415 and 404.416 Deductions because of excess earnings; annual earnings test. Amount of deduction because of excess earnings. We have combined §§ 404.415 and 404.416 into a new § 404.415, ''Deductions because of excess earnings,'' because the topics are closely related and overlapping.

New § 404.415 explains the effect of excess earnings on the benefits of:

1. An insured person caused by his/her excess earnings;

2. An auxiliary beneficiary because of the excess earnings of the insured person on whose record he/she draws benefits;

3. An auxiliary beneficiary because of his/her own excess earnings, which reduce only that beneficiary's benefits.

The new § 404.415 also reflects the legislated changes in full retirement age and annual earnings test.

Section 404.428 Earnings in a taxable year. This section clarifies the method for calculating a beneficiary's or prospective beneficiary's annual earnings with respect to the annual earnings test. It also clarifies when the claimant may use a taxable year other than a calendar year, and the number of months in a taxable year used in the earnings test calculation for the year of death. This section also defines which reporting year wage earners and self-employed individuals must use relative to the year in which the earnings were earned.

This section is revised to reflect changes in the annual earnings test and full retirement age.

Section 404.429 Earnings; defined. This section defines wages and net earnings from self-employment for earnings test purposes. It also lists the self-employment occupations that are included in ''net earnings from self-employment'' for earnings test purposes. This section also defines the allowable level of a claimant's involvement and performance in an ongoing business in determining whether the claimant's retirement actually has taken place.

The section is revised to reflect the new annual earnings test and full retirement age legislation.

Section 404.430 Excess earnings defined for taxable years ending after December 1972; monthly exempt amount defined. This section defines the maximum monthly and annual amounts of earnings that can be earned by retirement and survivor beneficiaries without the earnings causing a reduction in their benefits. It then delineates the reduction if these earning limits are exceeded, as a proportion of the amount of earnings that are above those limits.

We have revised this section by changing the section heading to ''Monthly and annual exempt amounts defined; excess earnings defined,'' and deleting obsolete material. This section also reflects the changes in the annual earnings test and full retirement age, and displays annual earnings test exempt amounts for 2000 through 2005.

Section 404.434 Excess earnings; method of charging. This section describes the method of charging estimated excess earnings of an insured person and also the excess earnings of a beneficiary. Although the excess earnings may not completely eliminate the benefits to be paid on the insured's record, all the estimated earnings of the calendar (or fiscal) year are charged to the earlier months of the year. This may eliminate benefits for those earlier months, and may allow full benefits in the later months of the year. This section also states that if both the insured and other(s) receiving benefits on an insured's record have excess earnings, the excess earnings of the insured are first charged to the total family benefits payable (or deemed payable), and then the excess earnings of the secondary beneficiary are charged against that secondary beneficiary's remaining benefits. This section also clarifies that the excess earnings of a person receiving benefits on another's record only diminish or eliminate the benefits of that beneficiary; they do not affect the benefits of the insured or those of others receiving benefits on the insured's record.

We revised this section to be consistent with the rule in § 404.415(b) regarding divorced spouses by adding a cross-reference to that section. We have rewritten this section in plain language.

Section 404.435 Excess earnings; months to which excess earnings cannot be charged. This section lists the situations in which a person's excess earnings in a month are not counted to cause reductions in benefits. The section defines the grace year and the termination grace year, and delineates the circumstances where a person can have more than one grace year. The section cites examples to clarify these concepts.

This section also states the presumption that an individual was engaged in self-employment and/or performing services for wages each month in a taxable year in which such earnings are reported until the individual provides evidence to the Social Security Administration about non-earning months in that year.

We have rewritten this section in plain language, updated outdated examples, deleted obsolete material, and changed the heading to ''Excess earnings; months to which excess earnings can or cannot be charged; grace year defined,'' to reflect the change in the full retirement age.

Section 404.437 Excess earnings; benefit rate subject to deductions because of excess earnings.

This section delineates the various benefit reduction factors to which a beneficiary may be subjected.

We have rewritten the section by using simpler, clearer language. We also revised the section heading to ''Excess earnings; benefits subject to deductions because of excess earnings.''

Section 404.452 Reports to Social Security Administration of earnings; wages; net earnings from self-employment. This section contains the reporting requirements and conditions under which Social Security survivor and retirement beneficiaries, who have not yet reached full retirement age, are required to report earnings to the Social Security Administration. The purposes of these reports are: (1) To enable the Social Security Administration to adjust the monthly benefit amounts that may have been affected by the earnings test and (2) to establish whether a grace year has occurred because the earnings of a beneficiary fell below the earnings test amount. This section also conveys what reporting formats are acceptable, the filing deadlines and possible extensions, and the reporting requirements of persons receiving benefits on behalf of others (representative payees).

We have rewritten this section to reflect changes in the full retirement age and to reflect section 309(c) of Public Law 103–296, the Social Security Independence and Program Improvements Act of 1994, which eliminates an exception to the requirement to file an annual report for beneficiaries under age 70 receiving auxiliary or survivor's benefits when there are auxiliary or survivor beneficiaries living in a separate household, and deleted obsolete material.

Comment on Notice of Proposed Rulemaking

On August 25, 2003, we published a notice of proposed rulemaking in the **Federal Register** at 68 FR 50985 and provided a 60-day period for interested individuals and organizations to comment. We received one comment from an individual concerning this action. Following is a summary of the comment and our response.

Comment: This commenter states that the original premise of social security was only to pay benefits to replace income that was reduced or lost because of retirement, death or disability. The commenter believes that the original basic rules and premise to receive benefits has been broken, as a result of eliminating the earnings test at age 65.

Response: The elimination of the earnings test at full retirement age is in accordance with Public Law 106–182 and our regulations must reflect the terms of the statute.

For the reason discussed above, we have not changed the language of the regulatory text from what was published in the notice of proposed rulemaking as a result of the public comment. However, we have changed the language from what we published in the notice of proposed rulemaking by making non-substantive wording and formatting changes and punctuation corrections. Specifically, we:

1. Revised § 404.338 by removing the phrase ''widow's and widower's'' and the word ''the'' when referring to benefits and replacing them with the word ''your''.

2. Revised §§ 404.338, 404.415, 404.428, 404.429, 404.430, 404.434, 404.435, 404.437, and 404.452 by making the cross reference to the ''full retirement age'' rule more specifically 404.409(a).

3. Clarified § 404.430(a)(2) to explain that when we determine the earnings test exempt amounts each year, the exempt amount so determined must be greater than or equal to the corresponding exempt amount in effect for months in the taxable year in which

the exempt amount determination is being made.

4. Updated the chart in § 404.430(a)(2)(iii) to add the exempt amounts for 2004 and 2005.

5. Clarified § 404.434(b) by adding a cross-reference to § 404.415(b) for the effect on divorced wife's and divorced husband's benefits.

6. Clarified § 404.435(b)(4) Example 2 by revising the reason for a child's benefit termination.

Regulatory Procedures

Executive Order 12866

We have consulted with the Office of Management and Budget (OMB) and determined that these final regulations meet the requirements for a significant regulatory action under Executive Order 12866, as amended by Executive Order 13258. Thus, they were subject to OMB review.

Regulatory Flexibility Act

We certify that these final regulations will not have a significant economic impact on a substantial number of small entities because they affect only individuals. Therefore, a regulatory flexibility analysis, as provided in the Regulatory Flexibility Act, as amended, is not required.

Paperwork Reduction Act

The Paperwork Reduction Act (PRA) of 1995 says that no persons are required to respond to a collection of information unless it displays a valid OMB control number. In accordance with the PRA, SSA is providing notice that the OMB has approved the information collection requirements contained in sections 404.428(b), 404.429(d), 404.435(d)–(e) and 404.452(a)–(e) of these final rules. The OMB Control Number for these collections is 0960–0676, expiring October 31, 2006.

(Catalog of Federal Domestic Assistance Program Nos. 96.001, Social Security-Disability Insurance; 96.002, Social Security-Retirement Insurance; 96.004, Social Security-Survivors Insurance)

List of Subjects in 20 CFR Part 404

Administrative practice and procedure in the federal old age, survivors and disability insurance program: Earnings coverage; Insured status; Computation of and eligibility for benefits.

Dated: February 15, 2005.

Jo Anne B. Barnhart,

Commissioner of Social Security.

■ For the reasons set out in the preamble, we amend subparts D and E of part 404 of Chapter III of Title 20 of the Code of Federal Regulations as follows:

PART 404—FEDERAL OLD-AGE, SURVIVORS AND DISABILITY INSURANCE (1950–)

Subpart D—[Amended]

■ 1. The authority citation for subpart D of part 404 continues to read as follows:

Authority: Secs. 202, 203(a) and (b), 205(a), 216, 223, 225, 228(a)–(e), and 702(a)(5) of the Social Security Act (42 U.S.C. 402, 403(a) and (b), 405(a), 416, 423, 425, 428(a)–(e), and 902(a)(5)).

■ 2. Section 404.338 is revised to read as follows:

§ 404.338 Widow's and widower's benefits amounts.

(a) Your monthly benefit is equal to the insured person's primary insurance amount. If the insured person dies before reaching age 62 and you are first eligible after 1984, we may compute a special primary insurance amount to determine the amount of the monthly benefit (see § 404.212(b)).

(b) We may increase your monthly benefit amount if the insured person delays filing for benefits or requests voluntary suspension of benefits, and thereby earns delayed retirement credit (see § 404.313), and/or works before the year 2000 after reaching full retirement age (as defined in § 404.409(a)). The amount of your monthly benefit may change as explained in § 404.304.

(c) Your monthly benefit will be reduced if the insured person chooses to receive old-age benefits before reaching full retirement age. If so, your benefit will be reduced to the amount the insured person would be receiving if alive, or 82½ percent of his or her primary insurance amount, whichever is larger.

Subpart E—[Amended]

■ 3. The authority citation for subpart E of part 404 is revised to read as follows:

Authority: Secs. 202, 203, 204(a) and (e), 205(a) and (c), 222(b), 223(e), 224, 225, 702(a)(5) and 1129A of the Social Security Act (42 U.S.C. 402, 403, 404(a) and (e), 405(a) and (c), 422(b), 423(e), 424a, 425, 902(a)(5) and 1320a–8a.).

■ 4. Section 404.415 is revised to read as follows:

§ 404.415 Deductions because of excess earnings.

(a) *Deductions because of insured individual's earnings.* Under the annual earnings test, we will reduce your monthly benefits (except disability insurance benefits based on the beneficiary's disability) by the amount of your excess earnings (as described in § 404.434), for each month in a taxable year (calendar year or fiscal year) in which you are under full retirement age (as defined in § 404.409(a)).

(b) *Deductions from husband's, wife's, and child's benefits because of excess earnings of the insured individual.* We will reduce husband's, wife's, and child's insurance benefits payable (or deemed payable—see § 404.420) on the insured individual's earnings record because of the excess earnings of the insured individual. However, beginning with January 1985, we will not reduce the benefits payable to a divorced wife or a divorced husband who has been divorced from the insured individual for at least 2 years.

(c) *Deductions because of excess earnings of beneficiary other than the insured.* If benefits are payable to you (or deemed payable—see § 404.420) on the earnings record of an insured individual and you have excess earnings (as described in § 404.430) charged to a month, we will reduce only your benefits for that month under the annual earnings test. Child's insurance benefits payable by reason of being disabled will be evaluated using Substantial Gainful Activity guidelines (as described in § 404.1574 or § 404.1575). This deduction equals the amount of the excess earnings. (See § 404.434 for charging of excess earnings where both the insured individual and you, a beneficiary, have excess earnings.)

§ 404.416 [Removed]

■ 5. Section 404.416 is removed.

■ 6. Section 404.428 is revised to read as follows:

§ 404.428 Earnings in a taxable year.

(a) When we apply the annual earnings test to your earnings as a beneficiary under this subpart (see § 404.415), we count all of your earnings (as defined in § 404.429) for all months of your taxable year even though you may not be entitled to benefits during all months of that year. (See § 404.430 for the rule that applies to the earnings of a beneficiary who attains full retirement age (as described in § 404.409(a))).

(b) Your taxable year is presumed to be a calendar year until you show to our satisfaction that you have a different taxable year. If you are self-employed, your taxable year is a calendar year unless you have a different taxable year for the purposes of subtitle A of the Internal Revenue Code of 1986. In either case, the number of months in a taxable year is not affected by:

(1) The date a claim for Social Security benefits is filed;

(2) Attainment of any particular age;

(3) Marriage or the termination of marriage; or

(4) Adoption.

(c) The month of death is counted as a month of the deceased beneficiary's taxable year in determining whether the beneficiary had excess earnings for the year under § 404.430. For beneficiaries who die after November 10, 1988, we use twelve as the number of months to determine whether the beneficiary had excess earnings for the year under § 404.430.

(d) Wages, as defined in § 404.429(c), are charged as earnings for the months and year in which you rendered the services. Net earnings or net losses from self-employment count as earnings or losses in the year for which such earnings or losses are reportable for Federal income tax purposes.

■ 7. Section 404.429 is revised to read as follows:

§ 404.429 Earnings; defined.

(a) *General.* The term ''earnings'' as used in this subpart (other than as a part of the phrase ''net earnings from self-employment'') includes the sum of your wages for services rendered in a taxable year, plus your net earnings from self-employment for the taxable year, minus any net loss from self-employment for the same taxable year.

(b) *Net earnings or net loss from self-employment.* Your net earnings or net loss from self-employment are determined under the provisions in subpart K of this part, except that:

(1) In this section, the following occupations are included in the definition of ''trade or business'' (although they may be excluded in subpart K):

(i) The performance of the functions of a public office;

(ii) The performance of a service of a duly ordained, commissioned, or licensed minister of a church in the exercise of his or her ministry or by a member of a religious order in the exercise of duties required by the order;

(iii) The performance of service by an individual in the exercise of his or her profession as a Christian Science practitioner;

(iv) The performance by an individual in the exercise of his or her profession as a doctor of medicine, lawyer, dentist, osteopath, veterinarian, chiropractor, naturopath, or optometrist.

(2) For the sole purpose of the earnings test under this subpart:

(i) If you reach full retirement age, as defined in § 404.409(a), on or before the last day of your taxable year, you will have excluded from your gross earnings from self-employment, your royalties attributable to a copyright or patent obtained before the taxable year in which you reach full retirement age; and

(ii) If you are entitled to insurance benefits under title II of the Act, other than disability insurance benefits or child's insurance benefits payable by reason of being disabled, we will exclude from gross earnings any self-employment income you received in a year after your initial year of entitlement that is not attributable to services you performed after the first month you became entitled to benefits. In this section, services means any significant work activity you performed in the operation or management of a trade, profession, or business which can be related to the income received. If a part of the income you receive in a year is not related to any significant services you performed after the month of initial entitlement, only that part of your income may be excluded from gross earnings for deduction purposes. We count the balance of the income for deduction purposes. Your royalties or other self-employment income is presumed countable for purposes of the earnings test until it is shown to our satisfaction that such income may be excluded under this section.

(3) We do not count as significant services:

(i) Actions you take after the initial month of entitlement to sell a crop or product if it was completely produced in or before the month of entitlement. This rule does not apply to income you receive from a trade or business of buying and selling products produced or made by others; for example, a grain broker.

(ii) Your activities to protect an investment in a currently operating business or activities that are too irregular, occasional, or minor to be considered as having a bearing on the income you receive, such as—

(A) Hiring an agent, manager, or other employee to operate the business;

(B) Signing contracts where your signature is required, so long as the major contract negotiations were handled by others in running the business for you;

(C) Looking over the company's financial records to assess the effectiveness of those agents, managers, or employees in running the business for you;

(D) Personally contacting an old and valued customer solely for the purpose of maintaining good will when such contact has a minimal effect on the ongoing operation of the trade or business; or

(E) Occasionally filling in for an agent, manager, or other employee or partner in an emergency.

(4) In figuring your net earnings or net loss from self-employment, we count all net income or net loss even though:

(i) You did not perform personal services in carrying on the trade or business;

(ii) The net profit was less than $400;

(iii) The net profit was in excess of the maximum amount creditable to your earnings record; or

(iv) The net profit was not reportable for social security tax purposes.

(5) Your net earnings from self-employment is the excess of gross income over the allowable business deductions (allowed under the Internal Revenue Code). Net loss from self-employment is the excess of business deductions (that are allowed under the Internal Revenue Code) over gross income. You cannot deduct, from wages or net earnings from self-employment, expenses in connection with the production of income excluded from gross income under paragraph (b)(2)(ii) of this section.

(c) *Wages.* Wages include the gross amount of your wages rather than the net amount paid after deductions by your employer for items such as taxes and insurance. Wages are defined in subpart K of this part, except that we also include the following types of wages that are excluded in subpart K:

(1) Remuneration in excess of the amounts in the annual wage limitation table in § 404.1047;

(2) Wages of less than the amount stipulated in section § 404.1057 that you receive in a calendar year for domestic service in the private home of your employer, or service not in the course of your employer's trade or business;

(3) Payments for agricultural labor excluded under § 404.1055;

(4) Remuneration, cash and non-cash, for service as a home worker even though the cash remuneration you received is less than the amount stipulated in § 404.1058(a) in a calendar year;

(5) Services performed outside the United States in the Armed Forces of the United States.

(d) *Presumptions concerning wages.* For purposes of this section, when reports received by us show that you received wages (as defined in paragraph (c) of this section) during a taxable year, it is presumed that they were paid to you for services rendered in that year unless you present evidence to our satisfaction that the wages were paid for services you rendered in another taxable year. If a report of wages shows your wages for a calendar year, your taxable

year is presumed to be a calendar year for purposes of this section unless you present evidence to our satisfaction that your taxable year is not a calendar year.

■ 8. Section 404.430 is revised to read as follows:

§ 404.430 Monthly and annual exempt amounts defined; excess earnings defined.

(a) *Monthly and annual exempt amounts.* (1) The earnings test monthly and annual exempt amounts are the amounts of wages and self-employment income which you, as a Social Security beneficiary, may earn in any month or year without part or all of your monthly benefit being deducted because of excess earnings. The monthly exempt amount, (which is 1/12 of the annual exempt amount), applies only in a beneficiary's grace year or years. (See § 404.435(a) and (b)). The annual exempt amount applies to the earnings of each non-grace taxable year prior to the year of full retirement age, as defined in § 404.409(a). A larger ''annual'' exempt amount applies to the total earnings of the months in the taxable year that precedes the month in which you attain full retirement age. The full annual exempt amount applies to the earnings of these pre-full retirement age months, even though they are earned in less than a year. For beneficiaries using a fiscal year as a taxable year, the exempt amounts applicable at the end of the fiscal year apply.

(2) We determine the monthly exempt amounts for each year by a method that depends on the type of exempt amount. In each case, the exempt amount so determined must be greater than or equal to the corresponding exempt amount in effect for months in the taxable year in which the exempt amount determination is being made.

(i) To calculate the lower exempt amount (the one applicable before the calendar year of attaining full retirement age) for any year after 1994, we multiply $670 (the lower exempt amount for 1994) by the ratio of the national average wage index for the second prior year to that index for 1992. If the amount so calculated is not a multiple of $10, we round it to the nearest multiple of $10 (*i.e.*, if the amount ends in $5 or more, we round up, otherwise we round down). The annual exempt amount is then 12 times the rounded monthly exempt amount.

(ii) The higher exempt amount (the one applicable in months of the year of attaining full retirement age (as defined in section 404.409(a)) that precede such attainment) was set by legislation (Public Law 104–121) for years 1996–2002. To calculate the higher exempt amount for any year after 2002, we multiply $2,500 (the higher exempt amount for 2002) by the ratio of the national average wage index for the second prior year to that index for 2000. We round the result as described in paragraph (a)(2)(i) of this section for the lower exempt amount.

(iii) The following are the annual and monthly exempt amounts for taxable years 2000 through 2005.

Year	For years through taxable year preceding year of reaching full retirement age		Months of taxable year prior to month of full of retirement age	
	Reduction: $1 for every $2 over the exempt amount		Reduction: $1 for every $3 over the exempt amount	
	Annual	Monthly	Annual	Monthly
2000	$10,080	$840	$17,000	$1,417
2001	10,680	890	25,000	2,084
2002	11,280	940	30,000	2,500
2003	11,520	960	30,720	2,560
2004	11,640	970	31,080	2,590
2005	12,000	1,000	31,800	2,650

(b) *Method of determining excess earnings for years after December 1999.* If you have not yet reached your year of full retirement age, your excess earnings for a taxable year are 50 percent of your earnings (as described in § 404.429) that are above the exempt amount. After December 31, 1999, in the taxable year in which you will reach full retirement age (as defined in § 404.409(a)), the annual (and monthly, if applicable) earnings limit applies to the earnings of the months prior to the month in which you reach full retirement age. Excess earnings are 33 1/3 percent of the earnings above the annual exempt amount. Your earnings after reaching the month of full retirement age are not subject to the earnings test.

■ 9. Section 404.434 is revised to read as follows:

§ 404.434 Excess earnings; method of charging.

(a) *Months charged.* If you have not yet reached your year of full retirement age, and if your estimated earnings for a year result in estimated excess earnings (as described in § 404.430), we will charge these excess earnings to your full benefit each month from the beginning of the year, until all of the estimated excess earnings have been charged. Excess earnings, however, are not charged to any month described in §§ 404.435 and 404.436.

(b) *Amount of excess earnings charged.* (1) *Insured individual's excess earnings.* For each $1 of your excess earnings we will decrease by $1 the benefits to which you and all others are entitled (or deemed entitled—see § 404.420) on your earnings record. (See § 404.439 where the excess earnings for a month are less than the total benefits payable for that month.) (See 404.415(b) for the effect on divorced wife's and divorced husband's benefits.)

(2) *Excess earnings of beneficiary other than insured individual.* We will charge a beneficiary, other than the insured, $1 for each $1 of the beneficiary's excess earnings (see § 404.437). These excess earnings, however, are charged only against that beneficiary's own benefits.

(3) *You, the insured individual, and a person entitled (or deemed entitled) on your earnings record both have excess earnings.* If both you and a person entitled (or deemed entitled) on your earnings record have excess earnings (as described in § 404.430), your excess earnings are charged first against the total family benefits payable (or deemed payable) on your earnings record, as described in paragraph (b)(1) of this section. Next, the excess earnings of a person entitled on your earnings record are charged against his or her own benefits remaining after part of your excess earnings have been charged against his/her benefits (because of the reduction in the total family benefits payable). See § 404.441 for an example of this process and the manner in which

partial monthly benefits are apportioned.

(c) *Earnings test applicability.* Public Law 106–182 eliminated the Social Security earnings test, beginning with the month in which a person attains full retirement age (as defined in § 404.409(a)), for taxable years after 1999. In the year that you reach full retirement age, the annual earnings test amount is applied to the earnings amounts of the months that precede your month of full retirement age. (See § 404.430). The reduction rate for these months is $1 of benefits for every $3 you earned above the earnings limit in these months. The earnings threshold amount will be increased in conjunction with increases in average wages.

■ 10. Section 404.435 is revised to read as follows:

§ 404.435 Excess earnings; months to which excess earnings can or cannot be charged; grace year defined.

(a) *Monthly benefits payable.* We will not reduce your benefits on account of excess earnings for any month in which you, the beneficiary—

(1) Were not entitled to a monthly benefit;

(2) Were considered not entitled to benefits (due to non-covered work outside the United States or no child in care, as described in § 404.436);

(3) Were at full retirement age (as described in § 404.409(a));

(4) Were entitled to payment of a disability insurance benefit as defined in § 404.315; (see § 404.1592 and § 404.1592a(b) which describes the work test if you are entitled to disability benefits);

(5) Are age 18 or over and entitled to a child's insurance benefit based on disability;

(6) Are entitled to a widow's or widower's insurance benefit based on disability; or

(7) Had a non-service month in your grace year (see paragraph (b) of this section). A non-service month is any month in which you, while entitled to retirement or survivors benefits:

(i) Do not work in self-employment (see paragraphs (c) and (d) of this section);

(ii) Do not perform services for wages greater than the monthly exempt amount set for that month (see paragraph (e) of this section and § 404.430); and

(iii) Do not work in non-covered remunerative activity on 7 or more days in a month while outside the United States. A non-service month occurs even if there are no excess earnings in the year.

(b) *Grace year defined.* (1) A beneficiary's initial grace year is the first taxable year in which the beneficiary has a non-service month (see paragraph (a)(7) of this section) in or after the month in which the beneficiary is entitled to a retirement, auxiliary, or survivor's benefit.

(2) A beneficiary may have another grace year each time his or her entitlement to one type of benefit ends and, after a break in entitlement of at least one month, the beneficiary becomes entitled to a different type of retirement or survivors benefit. The new grace year would then be the taxable year in which the first non-service month occurs after the break in entitlement.

(3) For purposes of determining whether a given year is a beneficiary's grace year, we will not count as a non-service month, a month that occurred while the beneficiary was entitled to disability benefits under section 223 of the Social Security Act or as a disabled widow, widower, or child under section 202.

(4) A beneficiary entitled to child's benefits, to spouse's benefits before age 62 (entitled only by reason of having a child in his or her care), or to mother's or father's benefits is entitled to a termination grace year in any year the beneficiary's entitlement to these types of benefits terminates. This provision does not apply if the termination is because of death or if the beneficiary is entitled to a Social Security benefit for the month following the month in which the entitlement ended. The beneficiary is entitled to a termination grace year in addition to any other grace year(s) available to him or her.

Example 1: Don, age 62, will retire from his regular job in April of next year. Although he will have earned $15,000 for January-April of that year and plans to work part time, he will not earn over the monthly exempt amount after April. Don's taxable year is the calendar year. Since next year will be the first year in which he has a non-service month while entitled to benefits, it will be his grace year and he will be entitled to the monthly earnings test for that year only. He will receive benefits for all months in which he does not earn over the monthly exempt amount (May-December) even though his earnings have substantially exceeded the annual exempt amount. However, in the years that follow, up to the year of full retirement age, only the annual earnings test will be applied if he has earnings that exceed the annual exempt amount, regardless of his monthly earnings amounts.

Example 2: Marion was entitled to mother's insurance benefits from 1998 because she had a child in her care. Because she had a non-service month in 1998, 1998 was her initial grace year. Marion's child turned 16 in May 2000, and the child's benefits terminated in April 2000. Marion's entitlement to mother's benefits also terminated in April 2000. Since Marion's entitlement did not terminate by reason of her death and she was not entitled to another type of Social Security benefit in the month after her entitlement to a mother's benefit ended, she is entitled to a termination grace year for 2000, the year in which her entitlement to mother's insurance benefits terminated. She applied for and became entitled to widow's insurance benefits effective February 2001. Because there was a break in entitlement to benefits of at least one month before entitlement to another type of benefit, 2001 will be a subsequent grace year if Marion has a non-service month in 2001.

(c) *You worked in self-employment.* You are considered to have worked in self-employment in any month in which you performed substantial services (see § 404.446) in the operation of a trade or business (or in a combination of trades and businesses if there are more than one), as an owner or partner even though you had no earnings or net earnings resulting from your services during the month.

(d) *Presumption regarding work in self-employment.* You are presumed to have worked in self-employment in each month of your taxable year until you show to our satisfaction that in a particular month you did not perform substantial services (see § 404.446(c)) in any trades and businesses from which you derived your annual net income or loss (see § 404.429).

(e) *Presumption regarding services for wages.* You are presumed to have performed services in any month for wages (as defined in § 404.429) of more than the applicable monthly exempt amount in each month of the year, until you show to our satisfaction that you did not perform services for wages in that month that exceeded the monthly exempt amount.

■ 11. Section 404.437 is revised to read as follows:

§ 404.437 Excess earnings; benefit rate subject to deductions because of excess earnings.

We will further reduce your benefits (other than a disability insurance benefit) because of your excess earnings (see § 404.430), after your benefits may have been reduced because of the following:

(a) The family maximum (see §§ 404.403 and 404.404), which applies to entitled beneficiaries remaining after exclusion of beneficiaries deemed not entitled under § 404.436 (due to a deduction for engaging in non-covered remunerative activity outside the United States or failure to have a child in one's care);

(b) Your entitlement to benefits (see § 404.410) for months before you reach full retirement age (see § 404.409(a))

(this applies only to old-age, wife's, widow's, widower's or husband's benefits);

(c) Your receipt of benefits on your own earnings record, which reduces (see § 404.407) your entitlement (or deemed entitlement; see § 404.420) to benefits on another individual's earnings record; and

(d) Your entitlement to benefits payable (or deemed payable) to you based on the earnings record of an individual entitled to a disability insurance benefit because of that individual's entitlement to workers' compensation (see § 404.408).

■ 12. Section 404.452 is revised to read as follows:

§ 404.452 Reports to Social Security Administration of earnings; wages; net earnings from self-employment.

(a) *Reporting requirements and conditions under which a report of earnings, that is, wages and/or net earnings from self-employment, is required.* (1) If you have not reached full retirement age (see § 404.409(a)) and you are entitled to a monthly benefit, other than only a disability insurance benefit, you are required to report to us the total amount of your earnings (as defined in § 404.429) for each taxable year. This report will enable SSA to pay you accurate benefits and avoid both overpayments and underpayments.

(2) If your wages and/or net earnings from self-employment in any month(s) of the year are below the allowable amount (see §§ 404.446 and 404.447), your report should include this information in order to establish your grace year (see § 404.435) and possible eligibility for benefits for those months.

(3) Your report to us for a taxable year should be filed on or before the 15th day of the fourth month following the close of the taxable year; for example, April 15 when the beneficiary's taxable year is a calendar year. An income tax return or form W–2, filed timely with the Internal Revenue Service, may serve as the report required to be filed under the provisions of this section, where the income tax return or form W–2 shows the same wages and/or net earnings from self-employment that must be reported to us. Although we may accept W–2 information and special payment information from employers, you still have primary responsibility for making sure that the earnings we use for deduction purposes are correct. If there is a valid reason for a delay, we may grant you an extension of up to 4 months to file this report.

(4) You are not required to report to us if:

(i) You reached full retirement age before the first month of your entitlement to benefits; or

(ii) Your benefit payments were suspended under the provisions described in § 404.456 for all months of a taxable year before the year of full retirement age, or for all months prior to your full retirement age in the full retirement age year, unless you are entitled to benefits as an auxiliary or survivor and your benefits are reduced for any month in the taxable year because of earnings and there is another person entitled to auxiliary or survivor's benefits on the same record, but living in a different household.

(b) *Report required by person receiving benefits on behalf of another.* When you receive benefits as a representative payee on behalf of a beneficiary (see subpart U of this part), it is your duty to report any earnings of the beneficiary to us.

(c) *Information required.* If you are the beneficiary, your report should show your name, address, Social Security number, the taxable year for which the report is made, and the total amount of your wages and/or net earnings from self employment during the taxable year. If you are a representative payee, your report should show the name, address, and Social Security number of the beneficiary, the taxable year for which the report is made, and the total earnings of the beneficiary, as well as your name, address, and Social Security number.

(d) *Requirement to furnish requested information.* You, the beneficiary (or the person reporting on his/her behalf) are required to furnish any other information about earnings and services that we request for the purpose of determining the correct amount of benefits payable for a taxable year (see § 404.455).

(e) *Extension of time for filing report.* (1) *Request for extension to file report.* Your request for an extension of time, or the request of your authorized agent, must be in writing and must be filed at a Social Security Administration office before your report is due. Your request must include the date, your name, the Social Security number of the beneficiary, the name and Social Security number of the person filing the request if other than the beneficiary, the year for which your report is due, the amount of additional time requested, the reason why you require this extension (see § 404.454), and your signature.

(2) *Evidence that extension of time has been granted.* If you do not receive written approval of an extension of time for making your report of earnings, it will be presumed that no extension of time was granted. In such case, if you do not file on time, you will need to establish that you had good cause (§ 404.454) for filing your report after the normal due date.

[FR Doc. 05–9994 Filed 5–18–05; 8:45 am]

BILLING CODE 4191–02–P

DEPARTMENT OF STATE

22 CFR Part 62

[Public Notice: PN–5084]

RIN 1400–AC01

Participation in the Exchange Visitor Program as Professor and Research Scholar

AGENCY: State Department.

ACTION: Final rule.

SUMMARY: By this notice, the Department adopts as final with minor modification, the proposed rule published in the **Federal Register** on June 27, 2002. This rule amends the Department's Exchange Visitor Program regulations set forth at 22 CFR 62.20 by extending the duration of program participation for professors and research scholars from the current three years to five years. In addition, this rule implements a limitation on the eligibility of an extension for the professor and research scholar categories and implements a two-year bar for repeat participation to encourage and foster the purpose of the Mutual Educational and Cultural Exchange Act of 1961 (''Fulbright-Hays Act''). Additional minor modifications have been made throughout Sec. 62.20 for administrative purposes due to the implementation of the Student and Exchange Visitor Information System (SEVIS).

DATES: This rule becomes effective on the later of June 20, 2005, or the date upon which the Department of Homeland Security publishes a notice in the **Federal Register** announcing that it has completed the technical computer updates to its electronic Student and Exchange Visitor Information System (SEVIS) that are necessary to implement this rule.

FOR FURTHER INFORMATION CONTACT: Stanley S. Colvin, Acting Director, Office of Exchange Coordination and Designation, U.S. Department of State, 301 Fourth Street, SW., Room 734, Washington, DC 20547; telephone 202–203–5029; fax 202–203–5087; e-mail: *Jexchanges@state.gov.*

SUPPLEMENTARY INFORMATION: The Department published a proposed rule, Public Notice 4054 at 67 FR 43264, June 27, 2002, with a request for comments in the **Federal Register** regarding the authorized length of program duration for professors and research scholars. The rule proposed to lengthen the maximum program duration of this category from three years to five years.

The Department is implementing the change in maximum program duration and modifying the current regulations in order to develop a very simple, easy to administer, and user-friendly rule. In light of the favorable comments received, this rule is adopted to allow a five-year duration of program participation beginning with the participant's program begin date or initial program begin date (for continuing exchange visitors) identified in SEVIS and ending five years later. The five-year period of participation is calculated in calendar years from the participant's program begin date documented in SEVIS at the time the SEVIS record is validated. The Department assumes an exchange participant will actively pursue research or teaching opportunities for the entire five-year period. Generally, a participant in good standing with his or her program sponsor may depart and reenter the United States an unlimited number of times during the five calendar years. Thus, holiday visits, emergencies, consultations, attendance at professional meetings, and the like will not be prohibited or compromised.

It is extremely important to note, however, that the five-year period is not, as suggested in some comments, an aggregate of five years. The Department considered this approach and found it unworkable. Instead, this will be a calendar year, five-year period afforded to a participant on a ''use or lose'' basis which commences with the program begin date identified in SEVIS. For example, a research scholar who comes to an institution for two years and returns to his or her home institution for nine months will be eligible, as a program matter, to return to the same U.S. institution—or transfer to another—for an additional two years and three months. If the participant does not return to the United States until three months later, he or she has two years remaining on his or her program.

Comments indicated some confusion regarding the long-standing ''12-month bar'' rule set forth at Sec. 62.20(d)(ii). The 12-month bar applies to any non-immigrant and accompanying spouse or dependent who has held F or J non-immigrant visa status within the twelve-month period immediately preceding the commencement of a professor or research scholar program. The 12-month bar remains in effect under this rule. If eligible for professor or research scholar category, the exchange participant is eligible for a five-year period of time for program participation under this category.

The accompanying spouse and dependents are also subject to the 12-month bar. While some J–2 spouses have made some sacrifices in order to accompany the J–1 exchange visitor, such sacrifice is compensated for by employment opportunities in the United States—often in research. If the J–2 visa holder is not subjected to the 12-month bar, the underlying objective for imposing the bar is defeated in that the J–2 visa holder could become a J–1 participant and the former J–1 participant would be afforded J–2 derivative status.

The Department proposed that participants afforded five years of program participation not be eligible to return to the United States as a repeat participant of the professor or research scholar category for a period of two years (24 months) immediately following completion of the five-year period. Almost all comments were in favor of the two-year bar for repeat participation of professors and research scholars. Individuals who have entered the United States under the auspices of the Exchange Visitor Program as a professor or research scholar, or who have acquired such status while in the United States, are not eligible for repeat participation as a professor or research scholar for a period of two years following the completion of the five-year period. For example, a professor who enters the United States on September 1, 2005, may leave the United States and return several times within the five years until August 31, 2010. After August 31, 2010, this individual cannot return to the United States in the professor or research scholar category for two years (*i.e.*, their program begin date as a professor or research scholar could not be earlier than September 1, 2012). Sponsors are not to issue Forms DS–2019 to proposed participants who meet this restriction.

However, if a participant completes a professor or research scholar exchange program at one institution for a period of less than five years, then remains outside the United States for a minimum period of two years, he or she is eligible to begin another five-year program. If the period of time outside the United States is less than two years, the participant is still considered to be within the five-year period of time from the initial program. If the participant completes a program at one institution, which is less than five years (*e.g.*; four years), the participant has the option to have the current program extended up to the maximum duration of five years, transfer to another institution for one additional year, or return home and fulfill the two year bar.

This rule also permits the extension beyond five years for participants under the direct sponsorship of a Federally Funded National Research and Development Center (''FFNRDC'') or a U.S. Federal Laboratory. These sponsors will be identified in SEVIS with a separate program serial (G–7) in order to differentiate these programs from other sponsors designated to conduct exchange activities in the categories of research scholar and professor. A ''G–7'' program serial will be assigned to eligible programs as determined by the Department. Once fully implemented in SEVIS by the Department of Homeland Security, professors and research scholars currently in the United States who have begun their exchange activity, as identified by the program begin date in SEVIS, will be eligible for extensions of their program to the five year maximum. Until the Department of Homeland Security develops the system change requirements necessary to implement the new five-year duration, such extensions must be submitted to the Department via SEVIS as extensions beyond the maximum duration of participation.

Analysis of Comments

The proposed rule was published for comment on June 27, 2002. The Department received twenty-six comments regarding this proposal, all of which endorsed the proposed change. There were not any comments that objected to the changes, however nine of the responses thought that the five-year period should be an aggregate period of time. The Department finds this method unworkable and not easily managed.

Five of the comments required clarification on use of the 12-month bar. As stated in the supplementary information, the 12-month bar applies to any non-immigrant and accompanying spouse or dependent that has held F or J non-immigrant visa status within the twelve-month period immediately preceding the commencement of a professor or research scholar program. The 12-month bar remains in effect under this rule.

Regulatory Findings

Administrative Procedure Act

The Department is publishing this rule as a final rule after it was published as a proposed rule on June 27, 2002.

Regulatory Flexibility Act

The Department of State, in accordance with the Regulatory Act (5 U.S.C. 601(b)), has reviewed this regulation and, by approving it, certifies that this rule will not have a significant economic impact on a substantial number of small entities.

Unfunded Mandates Reform Act of 1995

This rule will not result in the expenditure by State, local and tribal governments, in the aggregate, or by the private sector, of $100 million in any year and it will not significantly or uniquely affect small governments. Therefore, no actions were deemed necessary under the provisions of the Unfunded Mandates Reform Act of 1995.

Small Business Regulatory Enforcement Fairness Act of 1996

This rule is not a major rule as defined by 5 U.S.C. 804 for purposes of Congressional review of agency rulemaking under the Small Business Regulatory Enforcement Fairness Act of 1996 (5 U.S.C. 801–808). This rule will not result in an annual effect on the economy of $100 million or more; a major increase in costs or prices; or significant adverse effects on competition, employment, investment, productivity, innovation, or on the ability of United States-based companies to compete with foreign-based companies in domestic and export markets.

Executive Order 12866

The Department of State does not consider this rule to be a ''significant regulatory action'' under Executive Order 12866, section 3(f), Regulatory Planning and Review. In addition, the Department is exempt from Executive Order 12866 except to the extent that it is promulgating regulations in conjunction with a domestic agency that are significant regulatory actions. The Department has nevertheless reviewed the regulation to ensure its consistency with the regulatory philosophy and principles set forth in that Executive Order.

Executive Order 12988

The Department has reviewed this regulation in light of sections 3(a) and 3(b)(2) of Executive Order 12988 to eliminate ambiguity, minimize litigation, establish clear legal standards, and reduce burden.

Executive Order 13132

This regulation will not have substantial direct effects on the States, on the relationship between the national government and the States, or on the distribution of power and responsibilities among the various levels of government. Therefore, in accordance with section 6 of Executive Order 13132, it is determined that this rule does not have sufficient federalism implications to require consultations or warrant the preparation of a federalism summary impact statement. The regulations implementing Executive Order 12372 regarding intergovernmental consultation on Federal programs and activities do not apply to this regulation.

Paperwork Reduction Act

This rule does not impose any new reporting or recordkeeping requirements subject to the Paperwork Reduction Act, 44 U.S.C. Chapter 35.

List of Subjects in 22 CFR Part 62

Cultural exchange programs.

■ Accordingly, 22 CFR part 62 is amended as follows:

PART 62—EXCHANGE VISITOR PROGRAM

■ 1. The authority citation for part 62 continues to read as follows:

Authority: 8 U.S.C. 1101(a)(15)(J), 1182, 1184, 1258; 22 U.S.C. 1431–1442, 2451–2460; Foreign Affairs Reform and Restructuring Act of 1998, Public Law. 105–277, 112 Stat. 2681 *et seq.*; Reorganization Plan No. 2 of 1977, 3 CFR, 1977 Comp. p. 200; E.O. 12048 of March 27, 1978; 3 CFR, 1978 Comp. p. 168.

■ 2. Section 62.20 is revised to read as follows:

§ 62.20 Professors and research scholars.

(a) *Introduction.* These regulations govern Exchange Visitor Program participants in the categories of professor and research scholar, except:

(1) Alien physicians in graduate medical education or training, who are governed by regulations set forth at § 62.27; and

(2) Short-term scholars, who are governed by regulations set forth at § 62.21.

(b) *Purpose.* The purpose of the Exchange Visitor Program, in part, is to foster the exchange of ideas between Americans and foreign nationals and to stimulate international collaborative teaching, lecturing and research efforts. The exchange of professors and research scholars promotes the exchange of ideas, research, mutual enrichment, and linkages between research and educational institutions in the United States and foreign countries. It does so by providing foreign professors and research scholars the opportunity to engage in research, teaching and lecturing with their American colleagues, to participate actively in cross-cultural activities with Americans, and ultimately to share with their countrymen their experiences and increased knowledge of the United States and their substantive fields.

(c) *Designation.* The Department of State may, in its sole discretion, designate *bona fide* exchange visitor programs, which offer foreign nationals the opportunity to engage in research, teaching, lecturing, observing, or consulting at research institutions, corporate research facilities, museums, libraries, post-secondary accredited educational institutions, or similar types of institutions in the United States.

(d) *Visitor eligibility.* An individual may be selected for participation in the Exchange Visitor Program as a professor or research scholar subject to the following conditions:

(1) The participant must not be a candidate for a tenure track position;

(2) The participant has not been physically present in the United States as a nonimmigrant pursuant to the provisions of 8 U.S.C. 1101(a)(15)(F) or (J) for all or part of the twelve-month period immediately preceding the date of program commencement set forth on his or her Form DS–2019, unless:

(i) The participant is transferring to the sponsor's program pursuant to provisions set forth in § 62.42;

(ii) The participant's presence in the United States was of less than six months duration; or

(iii) The participant's presence in the United States was pursuant to a short-term scholar exchange activity as authorized by § 62.21; and

(3) The participant is not subject to the prohibition against repeat participation set forth at § 62.20(i)(2).

(e) *Issuance of Form DS–2019.* The Form DS–2019 must be issued only after the professor or research scholar has been accepted by the institution where he or she will participate in an exchange visitor program.

(f) *Location of the exchange.* Professors or research scholars must conduct their exchange activity at the site(s) of activity identified in SEVIS, which may be either the location of the exchange visitor program sponsor or the site of a third party facilitating the exchange with permission of the Responsible Officer. An exchange visitor may also engage in activities at

other locations if such activities constitute occasional lectures or consultations permitted by paragraph (g) of this section. All such sites of activity must be entered into SEVIS while the exchange visitor's SEVIS record is in Initial or Active status.

(g) *Occasional lectures or consultations.* Professors and research scholars may participate in occasional lectures and short-term consultations, if authorized to do so by his or her sponsor. Such lectures and consultations must be incidental to the exchange visitor's primary program activities. If wages or other remuneration are received by the exchange visitor for such activities, the exchange visitor must act as an independent contractor, as such term is defined in 8 CFR 274a.1(j), and the following criteria and procedures must be satisfied:

(1) *Criteria.* The occasional lectures or short-term consultations must:

(i) Be directly related to the objectives of the exchange visitor's program;

(ii) Be incidental to the exchange visitor's primary program activities;

(iii) Not delay the completion date of the exchange visitor's program; and

(iv) Be documented in SEVIS.

(2) *Procedures.* (i) To obtain authorization to engage in occasional lectures or short-term consultations involving wages or other remuneration, the exchange visitor must present to the responsible officer:

(A) A letter from the offeror setting forth the terms and conditions of the offer to lecture or consult, including the duration, number of hours, field or subject, amount of compensation, and description of such activity; and

(B) A letter from the exchange visitor's department head or supervisor recommending such activity and explaining how the activity would enhance the exchange visitor's program.

(ii) The responsible officer must review the letters required in paragraph (g)(2)(i) of this section and make a written determination whether such activity is warranted, will not interrupt the exchange visitor's original objective, and satisfies the criteria set forth in paragraph (g)(1) of this section.

(h) *Change of activity.* At the discretion and approval of the responsible officer, professors may freely engage in research and research scholars may freely engage in teaching and lecturing. Because these activities are intertwined, such a change of activity is not considered a change of category necessitating formal approval by the Department of State and does not require the issuance of a new Form DS–2019 to reflect a change in category. Such change in activity does not extend the exchange visitor's maximum duration of program participation.

(i) *Duration of participation.* The permitted duration of program participation for a professor or research scholar is as follows:

(1) *General limitation.* A professor or research scholar may be authorized to participate in the Exchange Visitor Program for the length of time necessary to complete his or her program, provided such time does not exceed five years. The five-year period of permitted program participation is continuous and begins with the initial program begin date documented in SEVIS or the date such status was acquired via a petition submitted and approved by the Department of Homeland Security (DHS) as documented in SEVIS and ends five years from such date.

(2) *Repeat participation.* Exchange participants who have entered the United States under the Exchange Visitor Program as a professor or research scholar, or who have acquired such status while in the United States, and who have completed his or her program are not eligible for participation as a professor or research scholar for a period of two years following the end date of such program participation as identified in SEVIS.

(3) *Extensions.* A responsible officer may not extend the period of program duration beyond the five-year period of maximum program duration authorized for professor and research scholar participants. The Department may, in its sole discretion, authorize an extension beyond the permitted five-year period, as submitted by a ''G–7'' program sponsor, upon successful demonstration of the following:

(i) The participant for whom an extension is requested is engaged in a research project under the direct sponsorship of a Federally Funded National Research and Development Center (''FFNRDC'') or a U.S. Federal Laboratory;

(ii) The FFNRDC or U.S. Federal Laboratory requesting the extension on behalf of the participant has determined, through peer review, that the participant's continued involvement in the project is beneficial to its successful conclusion; and

(iii) The Secretary of the Department of Homeland Security has determined in his/her discretion that the extension may be approved;

(iv) The extension request is for not more than five years.

Dated: May 10, 2005.

Patricia S. Harrison,

Assistant Secretary, Bureau of Educational and Cultural Affairs, Department of State.

[FR Doc. 05–10020 Filed 5–18–05; 8:45 am]

BILLING CODE 4710–05–P

DEPARTMENT OF THE TREASURY

Internal Revenue Service

26 CFR Part 1

[TD 9202]

RIN 1545–BD25

Additional Rules for Exchanges of Personal Property Under Section 1031(a)

AGENCY: Internal Revenue Service (IRS), Treasury.

ACTION: Final regulations and removal of temporary regulations.

SUMMARY: This document contains final regulations that replace the use of the Standard Industrial Classification (SIC) system with the North American Industry Classification System (NAICS) for determining what properties are of a like class for purposes of section 1031 of the Internal Revenue Code (Code). The regulations affect taxpayers that engage in like-kind exchanges of depreciable tangible personal property.

DATES: *Effective Date:* These regulations are effective May 19, 2005.

Applicability Dates: For dates of applicability, see § 1.1031(a)–2(d).

FOR FURTHER INFORMATION CONTACT: J. Peter Baumgarten, (202) 622–4920 (not a toll-free number).

SUPPLEMENTARY INFORMATION:

Background

This document contains amendments to 26 CFR part 1. On August 13, 2004, the IRS and Treasury Department published in the **Federal Register** a notice of proposed rulemaking (REG–116265–04; 69 FR 50108) by cross reference to temporary regulations (TD 9151; 69 FR 50067) under section 1031(a). These amendments relate to the transition from the use of the four-digit codes under the SIC system to the six-digit NAICS for determining product classes of depreciable tangible personal property exchanged under section 1031. No written or electronic comments in response to the proposed regulations or requests to speak at a public hearing were received, and no hearing was held. The proposed regulations under section 1031 are adopted by this Treasury decision, and the temporary regulations are removed.

Effective Date

These final regulations apply to transfers of property made by taxpayers on or after August 12, 2004. However, taxpayers may apply the regulations to transfers of property made by taxpayers on or after January 1, 1997, in taxable years for which the period of limitation for filing a claim for refund or credit under section 6511 has not expired. Additionally, taxpayers may treat properties within the same product classes under a 4-digit SIC code as properties of like class for transfers of property made by taxpayers on or before May 19, 2005.

Special Analysis

It has been determined that these final regulations are not a significant regulatory action as defined in Executive Order 12866. Therefore, a regulatory assessment is not required. It also has been determined that section 553(b) of the Administrative Procedure Act (5 U.S.C. chapter 5) does not apply to these regulations, and, because the regulations do not impose a collection of information on small entities, the Regulatory Flexibility Act (5 U.S.C. chapter 6) does not apply. Pursuant to section 7805(f) of the Code, the notice of proposed rulemaking that preceded these regulations was submitted to the Chief Counsel for Advocacy of the Small Business Administration for comment on its impact on small business.

Drafting Information

The principal author of these final regulations is J. Peter Baumgarten of the Office of the Associate Chief Counsel (Income Tax and Accounting). However, other personnel from the IRS and Treasury Department participated in their development.

List of Subjects in 26 CFR Part 1

Income taxes, Reporting and recordkeeping requirements.

Adoption of Amendments to the Regulations

■ Accordingly, 26 CFR part 1 is amended as follows:

PART 1—INCOME TAXES

■ **Paragraph 1.** The authority citation for part 1 continues to read, in part, as follows:

Authority: 26 U.S.C. 7805. * * *

■ **Par. 2.** Section 1.1031(a)–2 is amended by:

■ 1. Revising paragraphs (b)(3) through (b)(6), *Example 3* and *Example 4* of paragraph (b)(7), and paragraph (d).

■ 2. Adding paragraph (b)(8).

The revisions and addition read as follows.

§ 1.1031(a)–2 Additional rules for exchanges of personal property.

* * * * *

(b) * * *

(3) *Product classes.* Except as provided in paragraphs (b)(4) and (5) of this section, or as provided by the Commissioner in published guidance of general applicability, property within a product class consists of depreciable tangible personal property that is described in a 6-digit product class within Sectors 31, 32, and 33 (pertaining to manufacturing industries) of the North American Industry Classification System (NAICS), set forth in Executive Office of the President, Office of Management and Budget, *North American Industry Classification System*, United States, 2002 (NAICS Manual), as periodically updated. Copies of the NAICS Manual may be obtained from the National Technical Information Service, an agency of the U.S. Department of Commerce, and may be accessed on the internet. Sectors 31 through 33 of the NAICS Manual contain listings of specialized industries for the manufacture of described products and equipment. For this purpose, any 6-digit NAICS product class with a last digit of 9 (a miscellaneous category) is not a product class for purposes of this section. If a property is listed in more than one product class, the property is treated as listed in any one of those product classes. A property's 6-digit product class is referred to as the property's NAICS code.

(4) *Modifications of NAICS product classes.* The product classes of the NAICS Manual may be updated or otherwise modified from time to time as the manual is updated, effective on or after the date of the modification. The NAICS Manual generally is modified every five years, in years ending in a 2 or 7 (such as 2002, 2007, and 2012). The applicability date of the modified NAICS Manual is announced in the **Federal Register** and generally is January 1 of the year the NAICS Manual is modified. Taxpayers may rely on these modifications as they become effective in structuring exchanges under this section. Taxpayers may rely on the previous NAICS Manual for transfers of property made by a taxpayer during the one-year period following the effective date of the modification. For transfers of property made by a taxpayer on or after January 1, 1997, and on or before January 1, 2003, the NAICS Manual of 1997 may be used for determining product classes of the exchanged property.

(5) *Administrative procedures for revising general asset classes and product classes.* The Commissioner may, through published guidance of general applicability, supplement, modify, clarify, or update the guidance relating to the classification of properties provided in this paragraph (b). (See § 601.601(d)(2) of this chapter.) For example, the Commissioner may determine not to follow (in whole or in part) a general asset class for purposes of identifying property of like class, may determine not to follow (in whole or in part) any modification of product classes published in the NAICS Manual, or may determine that other properties not listed within the same or in any product class or general asset class nevertheless are of a like class. The Commissioner also may determine that two items of property that are listed in separate product classes or in product classes with a last digit of 9 are of a like class, or that an item of property that has a NAICS code is of a like class to an item of property that does not have a NAICS code.

(6) *No inference outside of section 1031.* The rules provided in this section concerning the use of general asset classes or product classes are limited to exchanges under section 1031. No inference is intended with respect to the classification of property for other purposes, such as depreciation.

(7) Examples. * * *

* * * * *

Example 3. Taxpayer E transfers a grader to F in exchange for a scraper. Neither property is within any of the general asset classes. However, both properties are within the same product class (NAICS code 333120). The grader and scraper are of a like class and deemed to be of a like kind for purposes of section 1031.

Example 4. Taxpayer G transfers a personal computer (asset class 00.12), an airplane (asset class 00.21) and a sanding machine (NAICS code 333210), to H in exchange for a printer (asset class 00.12), a heavy general purpose truck (asset class 00.242) and a lathe (NAICS code 333210). The personal computer and the printer are of a like class because they are within the same general asset class. The sanding machine and the lathe are of a like class because they are within the same product class (although neither property is within any of the general asset classes). The airplane and the heavy general purpose truck are neither within the same general asset class nor within the same product class, and are not of a like kind.

(8) *Transition rule.* Properties within the same product classes based on the 4-digit codes contained in Division D of the Executive Office of the President, Office of Management and Budget, Standard Industrial Classification

Manual (1987), will be treated as property of a like class for transfers of property made by taxpayers on or before May 19, 2005.

* * * * *

(d) *Effective date.* Except as otherwise provided in this paragraph (d), this section applies to exchanges occurring on or after April 11, 1991. Paragraphs (b)(3) through (b)(6), *Example 3* and *Example 4* of paragraph (b)(7), and paragraph (b)(8) of this section apply to transfers of property made by taxpayers on or after August 12, 2004. However, taxpayers may apply paragraphs (b)(3) through (b)(6), and *Example 3* and *Example 4* of paragraph (b)(7) of this section to transfers of property made by taxpayers on or after January 1, 1997, in taxable years for which the period of limitation for filing a claim for refund or credit under section 6511 has not expired.

§ 1.1031(a)–2T [Removed]

■ **Par. 3.** Section 1.1031(a)–2T is removed.

§ 1.1031(j)–1 [Amended]

■ **Par. 4.** Section 1.1031(j)–1(d) is amended by removing the language ''(SIC Code 3531)'' in *Example 3*(ii)(C) and *Example 5*(i) and adding ''(NAICS code 333120)'' in its place.

Approved: May 12, 2005.

Cono R. Namorato,

Acting Deputy Commissioner for Services and Enforcement.

Eric Solomon,

Acting Deputy Assistant Secretary of the Treasury.

[FR Doc. 05–9960 Filed 5–18–05; 8:45 am]

BILLING CODE 4830–01–P

DEPARTMENT OF THE INTERIOR

Office of Surface Mining Reclamation and Enforcement

30 CFR Part 913

[Docket No. IL–104–FOR]

Illinois Regulatory Program

AGENCY: Office of Surface Mining Reclamation and Enforcement, Interior.

ACTION: Final rule; approval of amendment.

SUMMARY: We, the Office of Surface Mining Reclamation and Enforcement (OSM), are approving an amendment to the Illinois regulatory program (Illinois program) under the Surface Mining Control and Reclamation Act of 1977 (SMCRA or the Act). Illinois proposed revisions to its regulations and statutes regarding the Surface Mining Advisory Council, citation references, typographical errors, procedures for relocating or closing public roads, and subsidence control. Illinois intends to revise its program to provide additional safeguards and to clarify ambiguities.

DATES: *Effective Date:* May 19, 2005.

FOR FURTHER INFORMATION CONTACT: Andrew R. Gilmore, Chief, Alton Field Division—Indianapolis Area Office. Telephone: (317) 226–6700. E-mail: *IFOMAIL@osmre.gov.*

SUPPLEMENTARY INFORMATION:

I. Background on the Illinois Program
II. Submission of the Amendment
III. OSM's Findings
IV. Summary and Disposition of Comments
V. OSM's Decision
VI. Procedural Determinations

I. Background on the Illinois Program

Section 503(a) of the Act permits a State to assume primacy for the regulation of surface coal mining and reclamation operations on non-Federal and non-Indian lands within its borders by demonstrating that its State program includes, among other things, ''a State law which provides for the regulation of surface coal mining and reclamation operations in accordance with the requirements of this Act * * *; and rules and regulations consistent with regulations issued by the Secretary pursuant to this Act.'' *See* 30 U.S.C. 1253(a)(1) and (7). On the basis of these criteria, the Secretary of the Interior (Secretary) conditionally approved the Illinois program on June 1, 1982. You can find background information on the Illinois program, including the Secretary's findings, the disposition of comments, and the conditions of approval, in the June 1, 1982, **Federal Register** (47 FR 23858). You can also find later actions concerning the Illinois program and program amendments at 30 CFR 913.10, 913.15, 913.16, and 913.17.

II. Submission of the Amendment

By letter dated December 10, 2004 (Administrative Record No. IL–5086), the Illinois Department of Natural Resources, Office of Mines and Minerals (Department) sent us an amendment to its program under SMCRA (30 U.S.C. 1201 *et seq.*). The Department sent the amendment at its own initiative. The Department proposed to amend its regulations at 62 Illinois Administrative Code (IAC) parts 1700, 1761, 1762, 1772, and 1773 and its statutes at 225 Illinois Compiled Statutes (ILCS) 720/1.04.

We announced receipt of the proposed amendment in the February 8, 2005, **Federal Register** (70 FR 6602). In the same document, we opened the public comment period and provided an opportunity for a public hearing or meeting on the adequacy of the amendment. We did not hold a public hearing or meeting because no one requested one. The public comment period ended on March 10, 2005. We did not receive any public comments.

III. OSM's Findings

Following are the findings we made concerning the amendment under SMCRA and the Federal regulations at 30 CFR 732.15 and 732.17. We are approving the amendment.

A. Minor Revisions to Illinois' Regulations

Illinois proposed minor reference, wording, recodification, and typographical changes to the following previously-approved regulations:

1. 62 IAC 1700.17 Administration

In subsection (a), Illinois proposed to change its reference to SMCRA by changing it from ''the Surface Mining Control and Reclamation Act of 1977'' to ''the Federal Act (30 USCA § 1201 *et seq.*).'' Illinois proposed to update a citation reference, because of a previous recodification of statutes, by changing the citation from ''(Ill. Rev. Stat. 1985, ch. 127, pars. 1 *et seq.*)'' to ''[20 ILCS 5].'' Also, Illinois proposed to make various minor wording changes to clarify the general duties and powers of the Department. In subsections (a) through (d), because of a previous recodification of statutes, Illinois proposed to update citation references by changing the citations from ''(Ill. Rev. Stat. 1985, ch. 96 ½, par. 7909)'' to ''[225 ILCS 720/9].''

2. 62 IAC 1761.16 Submission and Processing of Requests for Valid Existing Rights Determinations

Illinois proposed to correct two typographical errors in subsection (b)(3) by changing a reference from ''subsection (b)(1)'' to ''subsection (b)(2)'' and by changing a reference from ''subsection (b)(2)'' to ''subsection (b)(1).''

3. 62 IAC 1762.15 Exploration on Lands Designated as Unsuitable for Surface Coal Mining Operations

Illinois proposed to correct two references by changing one reference from ''this Part'' to ''62 Ill. Adm. Code 1761 through 1764'' and by changing the other reference from ''this Part, any approved State or Federal program, and other applicable requirements'' to ''62 Ill. Adm. Code 1700 through 1850 and other applicable requirements.''

4. 62 IAC 1772.12 Permit Requirements for Exploration Removing More Than 250 Tons of Coal

Illinois proposed to correct a typographical error at subsection (b)(14) by changing its reference from ''62 Ill. Adm. Code 176.11'' to ''62 Ill. Adm. Code 1761.11.''

Because these changes are minor, we find that they will not make Illinois' regulations less effective than the corresponding Federal regulations at 30 CFR part 700, 761.16, 762.15, and 772.12, respectively.

B. Surface Mining Advisory Council

1. 225 ILCS 720 Advisory Council on Reclamation

On June 1, 1980, the Illinois General Assembly added Section 1.04 to 225 ILCS 720 of the Illinois Surface Coal Mining Land Conservation and Reclamation Act (State Act) to create the Surface Mining Advisory Council (Council). The Council was to act as an advisory body to the Director of the Illinois Department of Natural Resources (IDNR) and to the Office of Mines and Minerals, Land Reclamation Division (LRD) on matters of mining and reclamation as they relate to State rules. The Department had to submit proposed State rules to the Council for review and recommendations. The Council had to review SMCRA, the Federal regulations, and the proposed State rules before making its recommendations. Also, the Council requested comments from affected persons and the public before making its recommendations. The recommendations of the Council had no binding effect on the IDNR or the LRD. The advice, findings, and recommendations of the Council had to be made public in a semi-annual report published by the Department. In Public Act 93–0168, the Illinois General Assembly amended the State Act by repealing 225 ILCS 720/1.04, effective July 10, 2003.

There is no direct requirement in SMCRA for an advisory council of this type. Today, members of the public may directly provide comments to the Department on proposed amendments because on September 1, 1983, the Illinois Secretary of State promulgated regulations at 1 IAC part 100 and 1 IAC 100.400. The regulation at 1 IAC part 100 requires the publication of proposed State rules in the Illinois Register and 1 IAC 100.400 requires a 45-day public notice period. During the public notice period, interested persons may submit comments and request a public hearing on the proposed rules. Based on the above, we find that Illinois has adequate procedures in place to receive comments and recommendations directly from the public. Therefore, the repeal of 225 ILCS 720/1.04 will not make the Illinois State Act less stringent than SMCRA, and we are approving it.

2. 62 IAC 1700.18 Advisory Council on Reclamation

Illinois' regulation at 62 IAC 1700.18 implemented the statutory requirements at 225 ILCS 720/1.04. Illinois proposed to delete this regulation to reflect the repeal of 225 ILCS 720/1.04.

There is no Federal counterpart regulation and based on the discussion in finding B.1, we find that the deletion of 62 IAC 1700.18 will not make the Illinois regulations less effective than the Federal regulations, and we are approving it.

C. 62 IAC Part 1761 Areas Designated by Act of Congress

1. 62 IAC 1761.11 Areas Where Mining Is Prohibited or Limited

At subsection (e)(1), concerning the need for a written waiver in order to mine within 300 feet of an occupied dwelling, Illinois proposed to add a citation reference to its regulation at 62 IAC 1761.15. Illinois' regulation at 62 IAC 1761.15 contains the procedures for waiving the prohibition on surface coal mining operations within the 300-foot buffer zone of an occupied dwelling. Illinois proposed to add the reference at 62 IAC 1761.11(e) to clarify where procedures for the waiver are located.

The counterpart Federal regulation at 30 CFR 761.11(e)(1) contains a similar reference to the Federal counterpart to 62 IAC 1761.15. Therefore, we find that Illinois' proposed change is consistent with and no less effective than the counterpart Federal regulation at 30 CFR 761.11(e)(1), and we are approving it.

2. 62 IAC 1761.14 Procedures for Relocation or Closing of a Public Road or Waiving the Prohibition on Surface Coal Mining Operations Within the Buffer Zone of a Public Road

a. Illinois proposed to amend subsection (b) by adding new paragraph (1). The new paragraph requires the applicant to submit a request with an application for a new permit, a significant revision of a permit, an insignificant revision of a permit, or an incidental boundary revision, as applicable, if the applicant does not have valid existing rights and is proposing to conduct mining operations within 100 feet measured horizontally of the outside right-of-way line of any public road or if the applicant is proposing to relocate or close any public road. Illinois also proposed to redesignate existing paragraphs (1) through (4) as paragraphs (2) through (5).

The Department has always required applicants to submit a request to conduct mining within 100 feet of the outside right-of-way line of a public road or to close or relocate a public road in conjunction with a permit or revision application. The counterpart Federal regulation at 30 CFR 761.14(b) does not contain this requirement. However, many State and Federal programs have a similar requirement either through written policy documents or in their permit and revision application forms. Therefore, we find that Illinois' proposal to codify this requirement does not make its regulation at 62 IAC 1761.14(b) less effective than the counterpart Federal regulation, and we are approving it.

b. In the last sentence of newly redesignated subsection (b)(3), Illinois proposed to change a citation reference from ''subsection (b)(2)'' to ''subsection (b)(3).''

This change was necessary because existing ''paragraph (2)'' was redesignated as ''paragraph (3).'' We find that this change will not make Illinois' regulation at 62 IAC 1761.14 less effective than the corresponding Federal regulation at 30 CFR 761.14, and we are approving it.

c. In the introductory paragraph of newly redesignated subsection (b)(5), Illinois proposed to remove the requirement for a written finding within 30 days after completion of a hearing, or after the end of the public comment period if no hearing is held, as to whether or not the interest of the affected public and landowners will be protected from the proposed mining operations within 100 feet of the outside right-of-way line of a public road and for relocation or closure of a public road. Illinois also added the requirements that the determination and written finding may be based on information submitted in writing and that a road may not be relocated or closed unless the Department determines that the interest of the affected public and landowners will be protected.

At redesignated subsection (b)(5), Illinois proposed to add provisions at paragraphs (5)(i) and (ii) to provide the time frames for making a written finding for requests to mine within 100 feet of the outside right-of-way line of a public road and for relocation or closure of a public road. If the proposal is contained in an application for a new permit or a significant revision under 62 IAC 1774.13(b)(3), the written finding must

be issued concurrently with the permit decision under 62 IAC 1773.15(a). If the proposal is contained in an application for an insignificant revision under 62 IAC 1774.13(b) or an incidental boundary revision under 62 IAC 1774.13(d), the written finding must be issued concurrently with the decision to issue or deny the revision.

Because of its requirement that activities within 100 feet of a public road or to relocate or close a public road must be included in a permit or revision application, Illinois considered it impractical to have one decision deadline for a portion of an application that is different than the deadline for making a decision on the application as a whole. Illinois' proposed changes establish the same decision deadline for activities within 100 feet of a public road and relocation or closure of a public road as for the application as a whole. The counterpart Federal regulation at 30 CFR 761.14(c) requires a written finding within 30 days after a public hearing or within 30 days after the end of the public comment period as to whether the interests of the public and affected landowners will be protected. The Federal regulation at 30 CFR 761.14(c) provides that the regulatory authority, or a public road authority that the regulatory authority designates, will publish notice of the public comment period and opportunity to request a public hearing on the road activities and make the determination and written finding that the interests of the public and affected landowners will be protected.

At previously approved, redesignated subsection (b)(2), Illinois requires an applicant to obtain any necessary approvals from State or local government public road authorities. These approvals must be included with the applicant's request for the subject road activities in the applicable permit or revision application. Under redesignated subsection (b)(3), the applicant must publish a public notice and offer an opportunity for a public hearing for proposals to conduct surface coal mining operations within 100 feet of the outside right-of-way line of a public road and to relocate or close a public road. In lieu of providing the public notice and opportunity for a public hearing for new permit and significant revision applications under 62 IAC 1761.14(b)(3), the applicant may provide it under 62 IAC 1773.13(a)(1)(E). Illinois will make the determination and written finding that the interests of the public and affected landowners will be protected based on information received at the public hearing or submitted in writing as a result of the public notice and opportunity for a hearing that the applicant must publish under redesignated subsection (b)(3) or 62 IAC 1773.13(a)(1)(E).

Both the State procedures and time frames and the Federal procedures and time frames assure that the public will have input into the required determination and written finding for mining within 100 feet of a public road and for relocating or closing a public road. Considering the additional requirements in the Illinois regulation at 62 IAC 1761.14(b), we find that the proposed procedures and time frames for making a written finding as to whether the interests of the public and affected landowners will be protected is no less effective than the requirements of the counterpart Federal regulation at 30 CFR 761.14.

Although not specifically stated, the counterpart Federal regulation also indicates that the determination and written finding may be based on information submitted in writing. Therefore, the new requirement at subsection (b)(5) that the determination and written finding may be based on information submitted in writing is no less effective than the counterpart Federal regulation. Based on our findings above, we are approving Illinois' proposed changes at 62 IAC 1761.14(b).

D. 62 IAC 1773.15 Review of Permit Applications

At subsection (c)(3), the Department cannot approve an application for a permit or significant revision unless it finds that the proposed permit area is not (1) within an area under study or administrative proceedings under a petition to have an area designated as unsuitable for surface coal mining operations or (2) within an area designated as unsuitable for mining. At the introductory paragraph of subsection (c)(3), Illinois proposed to remove the language ''or the proposed shadow area for a planned subsidence operation.''

The State regulation as revised is substantively the same as the counterpart Federal regulation at 30 CFR 773.15(c). The Federal regulation provides that the regulatory authority cannot approve an application for a permit or significant revision unless it finds that the proposed permit area is not (1) within an area under study or administrative proceedings under a petition to have an area designated as unsuitable for surface coal mining operations or (2) within an area designated as unsuitable for mining. Also, the Federal regulation at 30 CFR 761.200 provides in part that subsidence due to underground coal mining is not prohibited in areas that are protected from mining operations under section 522(e) of the Act. Therefore, Illinois' proposal to remove the requirement that such a finding be made for the proposed shadow area for a planned subsidence operation does not make 62 IAC 1773.15(c)(3) less effective than the counterpart Federal regulation, and we are approving it.

IV. Summary and Disposition of Comments

Public Comments

We asked for public comments on the amendment, but did not receive any.

Federal Agency Comments

On December 29, 2004, under 30 CFR 732.17(h)(11)(i) and section 503(b) of SMCRA, we requested comments on the amendment from various Federal agencies with an actual or potential interest in the Illinois program (Administrative Record No. IL–5087). We did not receive any comments.

Environmental Protection Agency (EPA) Concurrence and Comments

Under 30 CFR 732.17(h)(11)(ii), we are required to get a written concurrence from EPA for those provisions of the program amendment that relate to air or water quality standards issued under the authority of the Clean Water Act (33 U.S.C. 1251 *et seq.*) or the Clean Air Act (42 U.S.C. 7401 *et seq.*). None of the revisions that Illinois proposed to make in this amendment pertain to air or water quality standards. Therefore, we did not ask EPA to concur on the amendment.

On December 29, 2004, under 30 CFR 732.17(h)(11)(i), we requested comments on the amendment from EPA (Administrative Record No. IL–5087). EPA did not respond to our request.

State Historical Preservation Officer (SHPO) and the Advisory Council on Historic Preservation (ACHP)

Under 30 CFR 732.17(h)(4), we are required to request comments from the SHPO and ACHP on amendments that may have an effect on historic properties. On December 29, 2004, we requested comments on Illinois' amendment (Administrative Record No. IL–5087), but neither responded to our request.

V. OSM's Decision

Based on the above discussion, we approve the amendment Illinois sent us on December 10, 2004.

We approve the regulations proposed by Illinois with the provision that they

be fully promulgated in identical form to the regulations submitted to and reviewed by OSM and the public.

To implement this decision, we are amending the Federal regulations at 30 CFR part 913, which codify decisions concerning the Illinois program. We find that good cause exists under 5 U.S.C. 553(d)(3) to make this final rule effective immediately. Section 503(a) of SMCRA requires that the State's program demonstrate that the State has the capability of carrying out the provisions of the Act and meeting its purposes. Making this rule effective immediately will expedite that process. SMCRA requires consistency of State and Federal standards.

VI. Procedural Determinations

Executive Order 12630—Takings

In this rule, the State is adopting valid existing rights standards that are similar to the standards in the Federal definition at 30 CFR 761.5. Therefore, this rule has the same takings implications as the Federal valid existing rights rule. The takings implications assessment for the Federal valid existing rights rule appears in part XXIX.E. of the preamble to that rule. See 64 FR 70766, 70822–27, December 17, 1999. The revisions made at the initiative of the State that do not have Federal counterparts have also been reviewed and a determination made that they do not have takings implications. This determination is based upon the fact that the provisions are administrative and procedural or editorial in nature and are not expected to have a substantive effect on the regulated industry.

Executive Order 12866—Regulatory Planning and Review

This rule is exempted from review by the Office of Management and Budget (OMB) under Executive Order 12866.

Executive Order 12988—Civil Justice Reform

The Department of the Interior has conducted the reviews required by section 3 of Executive Order 12988 and has determined that this rule meets the applicable standards of subsections (a) and (b) of that section. However, these standards are not applicable to the actual language of State regulatory programs and program amendments because each program is drafted and promulgated by a specific State, not by OSM. Under sections 503 and 505 of SMCRA (30 U.S.C. 1253 and 1255) and the Federal regulations at 30 CFR 730.11, 732.15, and 732.17(h)(10), decisions on proposed State regulatory programs and program amendments submitted by the States must be based solely on a determination of whether the submittal is consistent with SMCRA and its implementing Federal regulations and whether the other requirements of 30 CFR parts 730, 731, and 732 have been met.

Executive Order 13132—Federalism

This rule does not have Federalism implications. SMCRA delineates the roles of the Federal and State governments with regard to the regulation of surface coal mining and reclamation operations. One of the purposes of SMCRA is to ''establish a nationwide program to protect society and the environment from the adverse effects of surface coal mining operations.'' Section 503(a)(1) of SMCRA requires that State laws regulating surface coal mining and reclamation operations be ''in accordance with'' the requirements of SMCRA, and section 503(a)(7) requires that State programs contain rules and regulations ''consistent with'' regulations issued by the Secretary pursuant to SMCRA.

Executive Order 13175—Consultation and Coordination With Indian Tribal Governments

In accordance with Executive Order 13175, we have evaluated the potential effects of this rule on Federally-recognized Indian tribes and have determined that the rule does not have substantial direct effects on one or more Indian tribes, on the relationship between the Federal Government and Indian tribes, or on the distribution of power and responsibilities between the Federal Government and Indian tribes. This determination is based on the fact that the Illinois program does not regulate coal exploration and surface coal mining and reclamation operations on Indian lands. Therefore, the Illinois program has no effect on Federally-recognized Indian tribes.

Executive Order 13211—Regulations That Significantly Affect the Supply, Distribution, or Use of Energy

On May 18, 2001, the President issued Executive Order 13211 which requires agencies to prepare a Statement of Energy Effects for a rule that is (1) considered significant under Executive Order 12866, and (2) likely to have a significant adverse effect on the supply, distribution, or use of energy. Because this rule is exempt from review under Executive Order 12866 and is not expected to have a significant adverse effect on the supply, distribution, or use of energy, a Statement of Energy Effects is not required.

National Environmental Policy Act

This rule does not require an environmental impact statement because section 702(d) of SMCRA (30 U.S.C. 1292(d)) provides that agency decisions on proposed State regulatory program provisions do not constitute major Federal actions within the meaning of section 102(2)(C) of the National Environmental Policy Act (42 U.S.C. 4332(2)(C)).

Paperwork Reduction Act

This rule does not contain information collection requirements that require approval by OMB under the Paperwork Reduction Act (44 U.S.C. 3507 *et seq.*).

Regulatory Flexibility Act

The Department of the Interior certifies that a portion of the provisions in this rule will not have a significant economic impact on a substantial number of small entities under the Regulatory Flexibility Act (5 U.S.C. 601 *et seq.*) because they are based upon counterpart Federal regulations for which an economic analysis was prepared and certification made that such regulations would not have a significant economic effect upon a substantial number of small entities. In making the determination as to whether this part of the rule would have a significant economic impact, the Department relied upon the data and assumptions for the counterpart Federal regulations. The Department of the Interior also certifies that the provisions in this rule that are not based upon counterpart Federal regulations will not have a significant economic impact on a substantial number of small entities under the Regulatory Flexibility Act (5 U.S.C. 601 *et seq.*). This determination is based upon the fact that the provisions are administrative and procedural in nature and are not expected to have a substantive effect on the regulated industry.

Small Business Regulatory Enforcement Fairness Act

This rule is not a major rule under 5 U.S.C. 804(2), the Small Business Regulatory Enforcement Fairness Act. This rule: (a) Does not have an annual effect on the economy of $100 million; (b) will not cause a major increase in costs or prices for consumers, individual industries, Federal, State, or local government agencies, or geographic regions; and (c) does not have significant adverse effects on competition, employment, investment,

productivity, innovation, or the ability of U.S.-based enterprises to compete with foreign-based enterprises. This determination is based upon the fact that a portion of the State provisions are based upon counterpart Federal regulations for which an analysis was prepared and a determination made that the Federal regulation was not considered a major rule. For the portion of the State provisions that is not based upon counterpart Federal regulations, this determination is based upon the fact that the State provisions are administrative and procedural or editorial in nature and are not expected to have a substantive effect on the regulated industry.

Unfunded Mandates

This rule will not impose an unfunded mandate on State, local, or tribal governments or the private sector of $100 million or more in any given year. This determination is based upon the fact that a portion of the State submittal, which is the subject of this rule, is based upon counterpart Federal regulations for which an analysis was prepared and a determination made that the Federal regulation did not impose an unfunded mandate. For the portion of the State provisions that is not based upon counterpart Federal regulations, this determination is based upon the fact that the State provisions are administrative and procedural or editorial in nature and are not expected to have a substantive effect on the regulated industry.

List of Subjects in 30 CFR Part 913

Intergovernmental relations, Surface mining, Underground mining.

Dated: April 12, 2005.

Charles E. Sandberg,

Regional Director, Mid-Continent Regional Coordinating Center.

■ For the reasons set out in the preamble, 30 CFR part 913 is amended as set forth below:

PART 913—ILLINOIS

■ 1. The authority citation for part 913 continues to read as follows:

Authority: 30 U.S.C. 1201 *et seq.*

■ 2. Section 913.15 is amended in the table by adding a new entry in chronological order by ''Date of final publication'' to read as follows:

§ 913.15 Approval of Illinois regulatory program amendments.

* * * * *

Original amendment submission date	Date of final publication	Citation/description
*	*	*
December 10, 2004	May 19, 2005	225 ILCS 720/1.04; 62 IAC 1700.17, 1700.18; 1761.11(e)(1), 1761.14(b), 1761.16(b)(3); 1762.15; 1772.12(b)(14); 1773.15(c)(3).

[FR Doc. 05–10013 Filed 5–18–05; 8:45 am]

BILLING CODE 4310–05–P

DEPARTMENT OF THE TREASURY

Office of the Secretary

31 CFR Part 10

[TD 9201]

RIN 1545–BA70

Regulations Governing Practice Before the Internal Revenue Service

AGENCY: Office of the Secretary, Treasury.

ACTION: Final regulations.

SUMMARY: This document contains final regulations revising the regulations governing practice before the Internal Revenue Service (Circular 230). These regulations affect individuals who practice before the Internal Revenue Service. These regulations clarify the standards for covered opinions.

DATES: *Effective Date:* These regulations are effective May 19, 2005.

Applicability Date: For dates of applicability, see § 10.35(g).

FOR FURTHER INFORMATION CONTACT: Heather L. Dostaler at (202) 622–4940, or Brinton T. Warren at (202) 622–7800 (not toll-free numbers).

SUPPLEMENTARY INFORMATION:

Background

Section 330 of title 31 of the United States Code authorizes the Secretary of the Treasury to regulate practice before the Treasury Department. The Secretary has published the regulations in Circular 230 (31 CFR part 10). On December 20, 2004, the Treasury Department and the IRS published in the **Federal Register** (69 FR 75839) final regulations (Final Regulations) applicable to written advice that is rendered after June 20, 2005. Since publication of the Final Regulations, Treasury and the IRS have received a number of comments highlighting areas where the language of the Final Regulations might have consequences inconsistent with their intent. Upon consideration of those comments, the Treasury Department and the IRS have made revisions to the Final Regulations, as described below, to clarify the language of the Final Regulations.

Explanation of Provisions

Written Advice Issued After a Tax Return Is Filed

Commentators have expressed concern that advice given after a tax return is filed, in particular advice given in the context of an IRS examination or litigation, might constitute a covered opinion within the meaning of the Final Regulations. In response to this concern, the definition of *excluded advice* in § 10.35 is expanded to include written advice prepared for and provided to a taxpayer, solely for use by that taxpayer, after the taxpayer has filed a tax return reflecting the tax benefits of the transaction described in or referred to in the written advice. This exclusion does not apply if the practitioner knows or has reason to know that the taxpayer will rely upon the written advice to take a position on a return (including an amended return that claims tax benefits not reported on the original return) filed after the date on which the advice is provided to the taxpayer.

Advice Provided by Taxpayer's In-House Counsel

Commentators have also expressed concern that written advice provided by in-house counsel to the employer for purposes of determining the employer's tax liability could constitute a covered opinion and that the concept of a covered opinion in that context raises numerous issues. In response to these concerns, the definition of *excluded advice* in § 10.35 is expanded to include advice provided to an employer by a practitioner in that practitioner's capacity as an employee of that employer solely for purposes of determining the tax liability of the employer. Written advice provided by in-house counsel that falls within the revised definition of excluded advice will continue to be subject to the

requirements set forth in § 10.37 for other written advice. The exclusion of written advice provided by in-house counsel from the covered opinion standards of § 10.35 is in no way intended to affect other aspects of the relationship between in-house counsel and the employer, such as whether, and in what circumstances, the attorney-client privilege applies to communications involving in-house counsel, or the circumstances in which written advice provided by in-house counsel might be relevant to determining the employer's good faith and reasonable cause.

Negative Advice

Several commentators have suggested that negative advice, *i.e.*, advice concluding that a Federal tax issue will not be resolved in the taxpayer's favor, could constitute a covered opinion. This concern is most prevalent (1) in the context of written advice relating to a listed transaction or a transaction having the principal purpose of tax avoidance and (2) where written advice addresses more than one Federal tax issue and the advice concludes that one or more Federal tax issues will not be resolved in the taxpayer's favor.

Treasury and the IRS encourage practitioners to advise taxpayers that a transaction is not appropriate or that one or more Federal tax issues will not be resolved in the taxpayer's favor. Treasury and the IRS are concerned, however, about written advice that could be construed as encouraging taxpayers to take aggressive positions on their tax returns, such as advice that concludes one or more Federal tax issues will not be resolved in the taxpayer's favor, but also reaches a conclusion favorable to the taxpayer at any confidence level (*e.g.*, not frivolous, realistic possibility of success, reasonable basis or substantial authority) with respect to that issue(s). Consequently, the regulations are revised to provide that written advice that concludes that a Federal tax issue will not be resolved in the taxpayer's favor is not a covered opinion with respect to that issue, unless the written advice also reaches a conclusion favorable to the taxpayer at any confidence level (*e.g.*, not frivolous, realistic possibility of success, reasonable basis or substantial authority) with respect to that issue. If written advice concerns more than one Federal tax issue, the advice must comply with the requirements of § 10.35(c) with respect to any Federal tax issue that is not treated as excluded advice pursuant to the preceding sentence.

Prominently Disclosed

Commentators have raised questions about how to apply the definition of *prominently disclosed* under § 10.35(b)(8). The prominent disclosure requirement is intended to ensure transparency between taxpayers and practitioners and to provide taxpayers with notice of any limitation on their ability to rely on written advice. To achieve these goals while minimizing the burden of compliance on practitioners, these regulations modify the definition of prominently disclosed.

Transactions With the Principal Purpose of Tax Avoidance or Evasion

Commentators have asked for clarification of the term *the principal purpose* of tax avoidance or evasion and in particular have asked whether the definition in 26 CFR 1.6662–4(g)(2)(i) and (ii) is incorporated into § 10.35. In response, these regulations define the principal purpose in § 10.35(b)(10) similar to the definition in 26 CFR 1.6662–4(g)(2)(ii). This definition also provides that a transaction can be a listed transaction or can have a significant purpose of tax avoidance even if it lacks the principal purpose of tax avoidance. Practitioners must evaluate transactions under the rules in § 10.35(b)(2)(i)(A) and (C), even if those transactions are not covered by § 10.35(b)(2)(i)(B) because they do not have the principal purpose of avoidance or evasion within the meaning of § 10.35(b)(10) of these regulations.

Special Analyses

This final rule clarifies and narrows the application of final regulations published in the **Federal Register** on December 20, 2004 (69 FR 75839). Accordingly, pursuant to 5 U.S.C. 553(b)(B), there is good cause to issue this final rule without prior notice and opportunity for public comment, because such would be contrary to the public interest. For these same reasons, and because the previously published final regulations apply to written advice rendered after June 20, 2005, under 5 U.S.C. 553(d)(1) and (3) a delayed effective date is not required. This final rule is not a significant regulatory action for purposes of Executive Order 12866. Accordingly, a regulatory impact analysis is not required. Because no notice of proposed rulemaking is required, the Regulatory Flexibility Act (5 U.S.C. chapter 6) does not apply.

Drafting Information

The principal author of the regulations is Heather L. Dostaler of the Office of the Associate Chief Counsel (Procedure and Administration), Administrative Provisions and Judicial Practice Division.

List of Subjects in 31 CFR Part 10

Administrative practice and procedure, Lawyers, Accountants, Enrolled agents, Enrolled actuaries, Appraisers.

Adoption of Amendments to the Regulations

■ Accordingly, 31 CFR part 10 is amended as follows:

PART 10—PRACTICE BEFORE THE INTERNAL REVENUE SERVICE

■ **Paragraph 1.** The authority citation for 31 CFR part 10 continues to read as follows:

Authority: Sec. 3, 23 Stat. 258, secs. 2–12, 60 Stat. 237 *et seq.*; 5 U.S.C. 301, 500, 551–559; 31 U.S.C. 330, 118 Stat. 1418; Reorg. Plan No. 26 of 1950, 15 FR 4935, 64 Stat. 1280, 3 CFR, 1949–1953 Comp., p. 1017.

■ **Par. 2.** Section 10.35 is amended by:
■ 1. Revising paragraph (b)(2)(ii).
■ 2. Revising paragraph (b)(8).
■ 3. Adding paragraph (b)(10).

The additions and revisions read as follows:

§ 10.35 Requirements for covered opinions.

* * * * *

(b) * * *

(2) * * *

(ii) *Excluded advice.* A *covered opinion* does not include—

(A) Written advice provided to a client during the course of an engagement if a practitioner is reasonably expected to provide subsequent written advice to the client that satisfies the requirements of this section;

(B) Written advice, other than advice described in paragraph (b)(2)(i)(A) of this section (concerning listed transactions) or paragraph (b)(2)(ii)(B) of this section (concerning the principal purpose of avoidance or evasion) that—

(*1*) Concerns the qualification of a qualified plan;

(*2*) Is a *State or local bond opinion*; or

(*3*) Is included in documents required to be filed with the Securities and Exchange Commission;

(C) Written advice prepared for and provided to a taxpayer, solely for use by that taxpayer, after the taxpayer has filed a tax return with the Internal Revenue Service reflecting the tax benefits of the transaction. The preceding sentence does not apply if the practitioner knows or has reason to know that the written advice will be relied upon by the taxpayer to take a position on a tax return (including for

these purposes an amended return that claims tax benefits not reported on a previously filed return) filed after the date on which the advice is provided to the taxpayer;

(D) Written advice provided to an employer by a practitioner in that practitioner's capacity as an employee of that employer solely for purposes of determining the tax liability of the employer; or

(E) Written advice that does not resolve a Federal tax issue in the taxpayer's favor, unless the advice reaches a conclusion favorable to the taxpayer at any confidence level (*e.g.*, not frivolous, realistic possibility of success, reasonable basis or substantial authority) with respect to that issue. If written advice concerns more than one Federal tax issue, the advice must comply with the requirements of paragraph (c) of this section with respect to any Federal tax issue not described in the preceding sentence.

* * * * *

(8) *Prominently disclosed.* An item is prominently disclosed if it is readily apparent to a reader of the written advice. Whether an item is readily apparent will depend on the facts and circumstances surrounding the written advice including, but not limited to, the sophistication of the taxpayer and the length of the written advice. At a minimum, to be prominently disclosed an item must be set forth in a separate section (and not in a footnote) in a typeface that is the same size or larger than the typeface of any discussion of the facts or law in the written advice.

* * * * *

(10) *The principal purpose.* For purposes of this section, the principal purpose of a partnership or other entity, investment plan or arrangement, or other plan or arrangement is the avoidance or evasion of any tax imposed by the Internal Revenue Code if that purpose exceeds any other purpose. The principal purpose of a partnership or other entity, investment plan or arrangement, or other plan or arrangement is not to avoid or evade Federal tax if that partnership, entity, plan or arrangement has as its purpose the claiming of tax benefits in a manner consistent with the statute and Congressional purpose. A partnership, entity, plan or arrangement may have a significant purpose of avoidance or evasion even though it does not have the principal purpose of avoidance or evasion under this paragraph (b)(10).

* * * * *

Approved: May 12, 2005.

Mark E. Matthews,

Deputy Commissioner for Services and Enforcement, Internal Revenue Service.

James W. Carroll,

Acting General Counsel, Department of the Treasury.

[FR Doc. 05–9959 Filed 5–18–05; 8:45 am]

BILLING CODE 4830–01–P

DEPARTMENT OF HOMELAND SECURITY

Coast Guard

33 CFR Part 165

[CGD13–05–011]

RIN 1625–AA00

Safety Zones: Annual Fireworks Events in the Captain of the Port Portland Zone

AGENCY: Coast Guard, DHS.

ACTION: Notice of enforcement.

SUMMARY: The Captain of the Port, Portland, Oregon, will enforce the safety zones established May 30, 2003, to safeguard watercraft and their occupants from safety hazards associated with the display of fireworks. Entry into these safety zones is prohibited unless authorized by the Captain of the Port Portland Zone.

DATES: Paragraphs (a)(3) through (a)(7) of 33 CFR 165.1315 will be enforced on (a)(3) July 4, 2005, (a)(4) July 3, 2005, (a)(5) July 4, 2005, (a)(6) July 4, 2005, and (a)(7) September 1, 2005, respectively.

FOR FURTHER INFORMATION CONTACT: Petty Officer Charity Keuter, c/o Captain of the Port Portland, OR 6767 North Basin Avenue Portland, OR 97217 at (503) 240–2590 to obtain information concerning enforcement of this rule.

SUPPLEMENTARY INFORMATION: On May 30, 2003 the Coast Guard published a final rule (68 FR 32366) establishing regulations in 33 CFR 165.1315 to safeguard watercraft and their occupants on the waters of the Willamette, Columbia, and Coos Rivers from safety hazards associated with the display of fireworks within the AOR of the Captain of the Port, Portland, Oregon. The Coast Guard is issuing notice that the Captain of the Port, Portland, Oregon will enforce the established safety zones on the waters of the Willamette, Columbia and Coos Rivers published in 33 CFR 165.1315 at paragraphs (a)(3) Tri-City Chamber of Commerce Fireworks Display, Kennewick, WA, on July 4, 2005, from 9:30 p.m. to 11 p.m.; (a)(4) Cedco Inc. Fireworks Display, North Bend, OR, on July 3, 2005, from 9:30 p.m. to 11 p.m.; (a)(5) Astoria 4th of July Fireworks, Astoria, OR, on July 4, 2005, from 9:30 p.m. to 11 p.m.; (a)(6) Oregon Food Bank Blues Festival Fireworks, Portland, OR, on July 4, 2005, from 9:30 p.m. to 11 p.m.; and (a)(7) Oregon Symphony Concert Fireworks Display, Portland, OR, on September 1, 2005, from 8:30 p.m. to 10 p.m. Entry into these safety zones is prohibited unless otherwise exempted or excluded under the final rule or unless authorized by the Captain of the Port or his designee. The Captain of the Port may be assisted by other Federal, State, or local agencies in enforcing these safety zones.

Dated: May 11, 2005.

Paul D. Jewell,

Captain, U.S. Coast Guard, Captain of the Port, Portland, OR.

[FR Doc. 05–9915 Filed 5–18–05; 8:45 am]

BILLING CODE 4910–15–P

ENVIRONMENTAL PROTECTION AGENCY

40 CFR Part 52

[CA–309–0475a; FRL–7901–9]

Revisions to the California State Implementation Plan, Imperial County Air Pollution Control District and San Joaquin Valley Unified Air Pollution Control District

AGENCY: Environmental Protection Agency (EPA).

ACTION: Direct final rule.

SUMMARY: EPA is taking direct final action to approve revisions to the Imperial County Air Pollution Control District (ICAPCD) and San Joaquin Valley Unified Air Pollution Control District (SJVUAPCD) portions of the California State Implementation Plan (SIP). These revisions concern volatile organic compound (VOC) emissions from aerospace manufacturing and component coating and can and coil coating operations. We are approving local rules that regulate these emission sources under the Clean Air Act as amended in 1990 (CAA or the Act).

DATES: This rule is effective on July 18, 2005, without further notice, unless EPA receives adverse comments by June 20, 2005. If we receive such comments, we will publish a timely withdrawal in the **Federal Register** to notify the public that this direct final rule will not take effect.

ADDRESSES: Send comments to Andy Steckel, Rulemaking Office Chief (AIR–4), U.S. Environmental Protection

Agency, Region IX, 75 Hawthorne Street, San Francisco, CA 94105–3901, or e-mail to *steckel.andrew@epa.gov,* or submit comments at *http://www.regulations.gov.*

You can inspect copies of the submitted SIP revisions, EPA's technical support document (TSD), and public comments at our Region IX office during normal business hours by appointment. You may also see copies of the submitted SIP revisions by appointment at the following locations:

Air and Radiation Docket and Information Center, U.S. Environmental Protection Agency, Room B–102, 1301 Constitution Avenue, NW., (Mail Code 6102T), Washington, DC 20460;

California Air Resources Board, Stationary Source Division, Rule Evaluation Section, 1001 ''I'' Street, Sacramento, CA 95814;

Imperial County Air Pollution Control District, 150 South 9th Street, El Centro, CA 92243; and

San Joaquin Valley Unified Air Pollution Control District, 1990 East Gettysburg Ave., Fresno, CA 93726.

A copy of the rule may also be available via the Internet at *http://www.arb.ca.gov/drdb/drdbltxt.htm.* Please be advised that this is not an EPA website and may not contain the same version of the rule that was submitted to EPA.

FOR FURTHER INFORMATION CONTACT: Jerald S. Wamsley, EPA Region IX, (415) 947–4111, *wamsley.jerry@epa.gov.*

SUPPLEMENTARY INFORMATION: Throughout this document, ''we,'' ''us'' and ''our'' refer to EPA.

Table of Contents

I. The State's Submittal
A. What Rules did the State Submit?
B. Are There Other Versions of These Rules?
C. What is the Purpose of the Submitted Rule Revisions?
II. EPA's Evaluation and Action
A. How is EPA Evaluating the Rules?
B. Do the Rules Meet the Evaluation Criteria?
C. EPA Recommendations to Further Improve the Rules
D. Public Comment and Final Action
III. Statutory and Executive Order Reviews

I. The State's Submittal

A. What Rules Did the State Submit?

Table 1 lists the rules we are approving with the dates that they were adopted by the local air agencies and submitted by the California Air Resources Board (CARB).

TABLE 1.—SUBMITTED RULES

Local agency	Rule No.	Rule title	Adopted	Submitted
ICAPCD	425	Aerospace Coating Operations	05/18/04	07/19/04
SJVUAPCD	4604	Can and Coil Coating Operations	01/15/04	06/03/04

On June 30, 2004, and August 10, 2004, respectively, EPA found that SJVUAPCD Rule 4604 and ICAPCD Rule 425 met the completeness criteria in 40 CFR part 51 appendix V. These criteria must be met before formal EPA review begins.

B. Are There Other Versions of These Rules?

There is no previous version of ICAPCD Rule 425 in the SIP, although the ICAPCD adopted earlier versions of this rule. On June 26, 2002 (67 FR 42999), EPA reviewed and approved SJVUAPCD Rule 4604 into the SIP. This EPA action concerned the December 20, 2001, version of SJVUAPCD Rule 4604. CARB has made no intervening submittals of SJVUAPCD Rule 4604.

C. What Is the Purpose of the Submitted Rule Revisions?

VOCs help produce ground-level ozone and smog, which harm human health and the environment. Section 110(a) of the CAA requires states to submit regulations that control VOC emissions. ICAPCD Rule 425 is a rule designed to reduce VOC emissions at industrial sites engaged in coating airplanes, space craft and their component parts. Similarly, SJVUAPCD Rule 4604 is a rule designed to reduce VOC emissions at industrial sites engaged in metal can and coil coating operations. VOCs are emitted during the preparation and coating of the aerospace, can, and coil parts, as well as the drying phase of the coating process.

ICAPCD Rule 425 establishes general emission limits in units of grams of Reactive Organic Compound (ROC) per litre (gr/l) of coating, less water and exempt compounds as applied. It also allows the use of add-on emission controls whose combined capture and control efficiency must be 85.5 percent or better and specifies certain operating equipment. ICAPCD's May 18, 2004, adoption and amendments to Rule 425 included the following provisions:

—Purpose and applicability;
—Exemptions from the rule;
—Emission reduction requirements;
—Recordkeeping to demonstrate compliance with the rule; and,
—Test methods for determining compliance with the rule.

SJVUAPCD Rule 4604 establishes general emission limits of VOC per liter of coating less water and exempt compounds as applied. It also allows the use of add-on emission controls with a combined capture/control efficiency of 90 percent. SJVUAPCD's January 15, 2004, amendments to Rule 4604 included the following significant changes to its 2001 SIP-approved version.

The form and content of the rule's quantity exemption is changed from 3 gallons per day to 55 gallons per rolling 12 month year. Also, an exemption concerning Rule 4604 and Rule 201 was deleted and an existing exemption for cleaning solvents used in research and development lab work was moved to Section 4 from elsewhere within the rule.

On February 1, 2006, new VOC limits provide for emission reductions in ten coating categories. A new coating category for Repair Coating was added at 750 grams per liter.

Section 5.2 was added detailing the requirements for an approved emission control system and source testing requirements.

The provisions for Alternative Emission Control Plans was deleted.

Section 6.0, Administrative Requirements was edited for clarity and amendments were added to sections concerning recordkeeping and operation and maintenance plan requirements.

Test methods for transfer efficiency and source testing were added.

These amendments and others are discussed in more detail within the TSD and the SJVUAPCD staff report concerning the Rule 4604 amendments.

Each rules's TSD has more information about the rule.

II. EPA's Evaluation and Action

A. How Is EPA Evaluating the Rules?

Generally, SIP rules must be enforceable (*see* section 110(a) of the Act), must require Reasonably Available Control Technology (RACT) for major sources in nonattainment areas (*see* section 182(a)(2)(A)), and must not relax

existing requirements (*see* sections 110(l) and 193). The SJVUAPCD regulates an ozone nonattainment area (*see* 40 CFR part 81), so Rule 4604 must fulfill RACT. However, the ICAPCD is an ozone transitional area given its lack of past ozone violations and proximity to VOC sources along the US-Mexican border. Our TSD discusses the ICAPCD's classification status and regulatory requirements in more detail.

Guidance and policy documents that we use to help evaluate specific enforceability and RACT requirements consistently include the following:

1. Portions of the proposed post-1987 ozone and carbon monoxide policy that concern RACT, 52 FR 45044, November 24, 1987.
2. ''Issues Relating to VOC Regulation Cutpoints, Deficiencies, and Deviations,'' EPA, May 25, 1988 (the Bluebook).
3. ''Guidance Document for Correcting Common VOC & Other Rule Deficiencies,'' EPA Region 9, August 21, 2001 (the Little Bluebook).
4. ''Control of Volatile Organic Emissions from Existing Stationary Sources Volume II: Surface Coating of Cans, Coils, Paper, Fabrics, Automobiles, and Light Duty Trucks,'' USEPA, May 1977, EPA–450/2–77–008.
5. ''Control of Volatile Organic Emissions from Coating Operations at Aerospace Manufacturing and Rework Operations,'' USEPA, 1997, EPA–453/R–97–004.

B. Do the Rules Meet the Evaluation Criteria?

We believe these rules are consistent with the relevant policy and guidance regarding enforceability, RACT, and SIP relaxations. On August 8, 2002, EPA proposed a limited approval and limited disapproval of Rule ICAPCD 425 (*see* 67 FR 50847) concerning the September 14, 1999, version of ICAPCD Rule 425. We did not finalize this proposal. The May 18, 2004, amendments to ICAPCD Rule 425 corrected these deficiencies.

The TSD has more information on our respective evaluations.

C. EPA Recommendations To Further Improve the Rules

We have no recommendations.

D. Public Comment and Final Action

As authorized in section 110(k)(3) of the Act, EPA is fully approving the submitted rules because we believe they fulfill all relevant requirements. We do not think anyone will object to this approval, so we are finalizing it without proposing it in advance. However, in the proposed rules section of this **Federal Register**, we are simultaneously proposing approval of the same submitted rules. If we receive adverse comments by June 20, 2005, we will publish a timely withdrawal in the **Federal Register** to notify the public that the direct final approval will not take effect and we will address the comments in a subsequent final action based on the proposal. If we do not receive timely adverse comments, the direct final approval will be effective without further notice on July 18, 2005. This will incorporate these rules into the federally enforceable SIP.

Please note that if EPA receives adverse comment on an amendment, paragraph, or section of this rule and if that provision may be severed from the remainder of the rule, EPA may adopt as final those provisions of the rule that are not the subject of an adverse comment.

III. Statutory and Executive Order Reviews

Under Executive Order 12866 (58 FR 51735, October 4, 1993), this action is not a ''significant regulatory action'' and therefore is not subject to review by the Office of Management and Budget. For this reason, this action is also not subject to Executive Order 13211, ''Actions Concerning Regulations That Significantly Affect Energy Supply, Distribution, or Use'' (66 FR 28355, May 22, 2001). This action merely approves state law as meeting Federal requirements and imposes no additional requirements beyond those imposed by state law. Accordingly, the Administrator certifies that this rule will not have a significant economic impact on a substantial number of small entities under the Regulatory Flexibility Act (5 U.S.C. 601 *et seq.*). Because this rule approves pre-existing requirements under state law and does not impose any additional enforceable duty beyond that required by state law, it does not contain any unfunded mandate or significantly or uniquely affect small governments, as described in the Unfunded Mandates Reform Act of 1995 (Pub. L. 104–4).

This rule also does not have tribal implications because it will not have a substantial direct effect on one or more Indian tribes, on the relationship between the Federal Government and Indian tribes, or on the distribution of power and responsibilities between the Federal Government and Indian tribes, as specified by Executive Order 13175 (65 FR 67249, November 9, 2000). This action also does not have Federalism implications because it does not have substantial direct effects on the States, on the relationship between the national government and the States, or on the distribution of power and responsibilities among the various levels of government, as specified in Executive Order 13132 (64 FR 43255, August 10, 1999). This action merely approves a state rule implementing a Federal standard, and does not alter the relationship or the distribution of power and responsibilities established in the Clean Air Act. This rule also is not subject to Executive Order 13045 ''Protection of Children from Environmental Health Risks and Safety Risks'' (62 FR 19885, April 23, 1997), because it is not economically significant.

In reviewing SIP submissions, EPA's role is to approve state choices, provided that they meet the criteria of the Clean Air Act. In this context, in the absence of a prior existing requirement for the State to use voluntary consensus standards (VCS), EPA has no authority to disapprove a SIP submission for failure to use VCS. It would thus be inconsistent with applicable law for EPA, when it reviews a SIP submission, to use VCS in place of a SIP submission that otherwise satisfies the provisions of the Clean Air Act. Thus, the requirements of section 12(d) of the National Technology Transfer and Advancement Act of 1995 (15 U.S.C. 272 note) do not apply. This rule does not impose an information collection burden under the provisions of the Paperwork Reduction Act of 1995 (44 U.S.C. 3501 *et seq.*).

The Congressional Review Act, 5 U.S.C. section 801 *et seq.*, as added by the Small Business Regulatory Enforcement Fairness Act of 1996, generally provides that before a rule may take effect, the agency promulgating the rule must submit a rule report, which includes a copy of the rule, to each House of the Congress and to the Comptroller General of the United States. EPA will submit a report containing this rule and other required information to the U.S. Senate, the U.S. House of Representatives, and the Comptroller General of the United States prior to publication of the rule in the **Federal Register**. A major rule cannot take effect until 60 days after it is published in the **Federal Register**. This action is not a ''major rule'' as defined by 5 U.S.C. section 804(2).

Under section 307(b)(1) of the Clean Air Act, petitions for judicial review of this action must be filed in the United States Court of Appeals for the appropriate circuit by July 18, 2005. Filing a petition for reconsideration by the Administrator of this final rule does not affect the finality of this rule for the purposes of judicial review nor does it extend the time within which a petition

for judicial review may be filed, and shall not postpone the effectiveness of such rule or action. This action may not be challenged later in proceedings to enforce its requirements. (*See* section 307(b)(2).)

List of Subjects in 40 CFR Part 52

Environmental protection, Air pollution control, Incorporation by reference, Intergovernmental relations, Ozone, Reporting and recordkeeping requirements, Volatile organic compounds.

Dated: March 25, 2005.

Laura Yoshii,

Acting Regional Administrator, Region IX.

■ Part 52, Chapter I, Title 40 of the Code of Federal Regulations is amended as follows:

PART 52—[AMENDED]

■ 1. The authority citation for part 52 continues to read as follows:

Authority: 42 U.S.C. 7401 *et seq.*

Subpart F—California

■ 2. Section 52.220 is amended by adding paragraphs (c)(331)(i)(A)(*2*) and (c)(332)(i)(A)(*3*) to read as follows:

§ 52.220 Identification of plan.

* * * * *

(c) * * *

(331) * * *

(i) * * *

(A) * * *

(*2*) Rule 4604, adopted on April 11, 1991, and amended on January 15, 2004.

* * * * *

(332) * * *

(i) * * *

(A) * * *

(*3*) Rule 425, adopted on August 5, 1989, and amended on May 18, 2004.

* * * * *

[FR Doc. 05–10010 Filed 5–18–05; 8:45 am]

BILLING CODE 6560–50–P

DEPARTMENT OF TRANSPORTATION

Maritime Administration

46 CFR Part 310

[Docket Number: MARAD–2004–17760]

RIN 2133–AB60

Merchant Marine Training

AGENCY: Maritime Administration, Department of Transportation.

ACTION: Final rule.

SUMMARY: This rule revises and adopts as final the interim final rule published in the **Federal Register** (69 FR 31897) on June 8, 2004. The Maritime Administration (MARAD) is publishing this final rule to implement changes to its regulations in part 310 regarding Maritime Education and Training. This rulemaking updates the Maritime Education and Training regulations to conform with title XXXV, subtitle A, of the National Defense Authorization Act for Fiscal Year 2004, regarding the administration of state, regional and United States merchant marine academies. This rulemaking also makes non-substantive technical changes to part 310.

DATES: This final rule is effective May 19, 2005.

ADDRESSES: This final rule is available for inspection and copying between 10 a.m. and 5 p.m., ET, Monday through Friday, except Federal holidays at the Docket Clerk, U.S. DOT Dockets, Room PL–401, Department of Transportation, 400 7th St., SW., Washington, DC 20590. An electronic version of this document along with all documents entered into this docket are available on the World Wide Web at *http://dms.dot.gov.*

FOR FURTHER INFORMATION CONTACT: Jay Gordon, Maritime Administration, 400 7th St., SW., Washington, DC 20590; telephone: (202) 366–5173; or e-mail: *Jay.Gordon@marad.dot.gov.*

SUPPLEMENTARY INFORMATION: On June 8, 2004, MARAD published an interim final rule in the **Federal Register** (69 FR 31897) that amended existing regulations in 46 CFR part 310 regarding Maritime Education and Training. This rulemaking adopts the interim final rule as a final rule and revises the interim rule in two ways. First, the interim final rule provided in section 310.12–1 that MARAD would post on our Web site a model agreement between MARAD and schools for annual maintenance and support payments, Federal student subsistence and incentive payments, and fuel assistance. In lieu of posting the agreement on our Web site, MARAD is amending this section to provide that interested parties may obtain copies of the agreement from the Office of Policy and Plans. The second change effected by this final rule involves sections 310.7(b)(5) and 310.58(b). Both sections describe the number of days a graduate must serve each year on a vessel at sea in order to satisfy this component of his/her service obligations. The interim final rule indicated in both sections that the number of days would be posted on MARAD's Web site. At this time, MARAD has decided not to post the number of days, but has instead decided to amend the State maritime academy's regulations at section 310.7(b)(5) to match the Merchant Marine Academy's regulations at 310.58(b), which provide a default minimum number of sea days that will satisfy the obligation as well as an alternate method to derive the number of sea days in lieu of the default number (*i.e.*, the median number of days of seafaring employment based on articles achieved by deck or engine officers in the most recent calendar year for which statistics are available).

The changes set forth in the interim rule, with the revisions noted above, are summarized in the section-by-section analysis below.

Comments on the interim rule were due by August 9, 2004, and no comments were received.

Section-by-Section Analysis

For purposes of the following analysis, the term ''Act'' refers to the National Defense Authorization Act for Fiscal Year 2004, Pub. L. 108–136, unless otherwise indicated.

Subpart A—Regulations and Minimum Standards for State, Territorial or Regional Maritime Academies and Colleges

Section 310.1 Definitions

(b) *Act*—We update the term ''Act'' to include sections of the Maritime Education and Training Act of 1980, Public Law 96–453, as amended, which includes the changes effected by the National Defense Authorization Act for Fiscal Year 2004, Public Law 108–136, and any subsequent amendments.

(i) *Cost of Education Provided*—is a concept added by the National Defense Authorization Act for Fiscal Year 2004, Public Law 108–136, in connection with requiring Student Incentive Payment (''SIP'') students defaulting on their obligations to repay the student incentive payments made to such students by the Federal Government.

(j)–(r)—Definitions under these designations were renumbered.

Section 310.3 Schools and Courses

Changes in this section include capitalizing the words ''training ship'' and replacing the title of the Office of Maritime Labor and Training with the Office of Policy and Plans.

Section 310.7 Federal Student Subsistence Allowances and Student Incentive Payments

Section 310.7(b)(1)—Under the Oceans Act of 1992, Public Law 102–587, the student incentive payment amount was increased from $1200 per annum to $3000 per annum. While MARAD's regulations currently list

$1200 as the annual SIP payment amount, students currently receive payments of $3000 per annum. Students receiving $3,000 under their existing service obligation contracts will have the option of continuing to receive the $3,000 payment under their old service obligation contracts or executing new service obligation contracts and receiving the increased amount of $4000 per annum. The new service obligation contracts will include the increased obligations required by the new law. Individuals must execute the new service obligation contracts to receive the increased SIP payment amount.

Section 310.7(b)(3) addresses the form of the service obligation contract. This paragraph is changed to reflect revisions in the Act.

Section 310.7(b)(3)(ii)—Under former (b)(3)(ii), the separation of an individual by the School released that individual from his or her obligation to complete the course of instruction at the School. By virtue of the changes in the law, the separation of an individual by the School no longer releases an individual from this obligation. An individual who is separated by the School is now in default of his or her service obligations and is liable for the remedies for failure to fulfill these obligations, such as induction into military service or recovery by the Federal Government of the Cost of Education Provided, plus interest and attorney's fees.

Section 310.7(b)(3)(iv)—The previous law required graduates to maintain their license for at least six (6) years following graduation. This previous law required the graduate to maintain a Coast Guard license at least equal to the license, including endorsements, which such graduate had upon graduation from the School. The subsequent promulgation of Standards of Training, Certification and Watchkeeping (STCW) requirements created a situation in which various graduates were required to take additional courses in order to maintain such a license. Given the unanticipated impact of the STCW requirements, the Administration has determined that individuals graduating without the necessary STCW courses need not take these courses and can satisfy their service obligations by maintaining a more restricted type of Coast Guard license, other than a continuity license. Continuity licenses were not deemed acceptable because they do not allow such graduates to sail in any capacity.

Individuals executing or reexecuting service obligation contracts after the effective date of the Act are specifically required by law to maintain licenses that are at least equal in status to the licenses they had at the time of graduation (*i.e.*, the ability to sail without restrictions in both domestic and foreign commerce). Such graduates are required to take all courses necessary to maintain their licenses, even with respect to unforeseen future requirements. The type of Coast Guard license that is required to satisfy the service obligation of maintaining a license for at least six (6) years following graduation is a license containing appropriate national and international endorsements and certifications required by the United States Coast Guard for service both on domestic and international voyages. ''Appropriate'' in this instance means the same endorsements and certifications held at the date of graduation, or the equivalent. Restricted licenses limited in applicability to just portions of the domestic or international voyages do not satisfy this obligation, nor do continuity licenses. By this change, Congress confirmed the Administration's longstanding interpretation of the law in this respect—that graduates continue to maintain Coast Guard licenses that are not more restricted than the licenses with which they graduated.

Section 310.7(b)(3)(vi)—The Act now allows employment within the Federal Government to satisfy the requirement that graduates ''serve in the foreign or domestic commerce'' or ''national defense'' of the United States. Such employment in the Federal Government must be significantly maritime-related and serve the national security interests of the United States.

The determination of whether such employment satisfies this service obligation is made by the Administration. Examples of civilian employment that might satisfy this obligation are civilian positions relating to vessel or port security in the Navy, the Department of Homeland Security, or the Transportation Security Administration. ''Significant'' is equated to a material or essential portion of an individual's responsibilities. It does not mean a ''majority'' of such individual's responsibilities, but means more than just an incidental part.

Section 310.7(b)(5)—This section is amended to provide a default minimum number of sea days as well as an alternate method to determine the minimum number of sea days to be used in lieu of the default number.

Section 310.7(b)(7) Breach of Contract

Section 310.7(b)(7)(i)(A)—Undergraduate Breach/Induction into Armed Forces: This paragraph is substantially rewritten to conform to the new terms of the Act. Any individual who has accepted SIP payments for a minimum of two (2) academic years and fails to fulfill any of their service obligations may be ordered by the Secretary of Defense to active duty in the Armed Forces of the United States to serve a period of time not to exceed two (2) years. In cases of hardship or impossibility of performance of the provisions of the service obligation contract due to accident, illness or other justifiable reason, as determined by the Maritime Administrator, this requirement may be waived in whole or in part. *See* section 310.7(b)(8).

Section 310.7(b)(7)(i)(B)—Undergraduate Breach/Collection of Cost of Education Provided: This paragraph contains a new provision set forth in the Act. It authorizes the Secretary of Transportation, acting through the Maritime Administrator, to take action against defaulting individuals to recover the Cost of Education Provided to such individuals, plus interest and attorney's fees. Such authority may be exercised in instances where the Maritime Administrator determines that it would better serve the national interest to recover the Cost of Education Provided from a defaulting individual rather than to refer such individual to the Secretary of Defense for induction into the Armed Forces of the United States.

Section 310.7(b)(7)(i)(C)—Sets forth the discretionary authority of the Maritime Administrator to reduce the amount to be recovered from such defaulting individuals to reflect partial performance of service obligations and such other factors as the Maritime Administrator determines merit such reduction. This provision is in addition to the Maritime Administrator's authority to waive the service obligations as set forth in section 310.7(b)(8).

Section 310.7(b)(7)(i)(D)—For purposes of paragraph (b)(7)(i)(A) of this section, an ''academic year'' is defined as the completion by a student of the required number of semesters, trimesters, or quarters, as applicable, whether at school or at sea, which comprise a complete course of study for an academic year. Thus, liability under paragraph (b)(7)(i)(A) begins for students at the beginning of their third (3rd) academic year, whether at school or at sea.

Section 310.7(b)(7)(ii) Post Graduation Defaults

Section 310.7(b)(7)(ii)(A)—Individuals who breach their service obligations after graduation are subject to be ordered to active duty in the

Armed Forces of the United States for a period of time not less than two (2) years and not more than the unexpired portion of the three (3) years of service required in the foreign and domestic commerce or the national defense of the United States following graduation.

Section 310.7(b)(7)(ii)(B)—If the Secretary of Defense is unable or unwilling to order an individual to active duty or if the Maritime Administrator determines that reimbursement of the Cost of Education Provided would better serve the interests of the United States, the Maritime Administrator may recover from the defaulting individual the Cost of Education Provided by the Federal Government, plus interest and attorney's fees.

Section 310.7(b)(7)(ii)(C)—Sets forth the discretionary authority of the Maritime Administrator to reduce the amount to be recovered from such defaulting individual to reflect partial performance of service obligations and such other factors as the Maritime Administrator determines merit such reduction.

This provision is in addition to the Maritime Administrator's authority to waive the service obligations. Such authority is set forth in section 310.7(b)(8) and may be exercised in cases where there would be undue hardship or impossibility of performance of the provisions of the service obligation contract due to accident, illness or other justifiable reason.

Section 310.7(b)(10)(ii)(C)—Reflects that graduates are required to keep the Office of Policy and Plans, as opposed to the Office of Maritime Labor, Training and Safety, aware of the graduates' current mailing addresses.

Section 310.7(b)(11)—This new paragraph reflects that the Administration is now authorized to collect debts owed to the Federal Government by commencing court proceedings as well as utilizing the Federal debt collection procedures set forth in chapter 176, title 28 of the United States Code and other applicable administrative remedies for debt collection. Such administrative collection options include offsetting debts against defaulting individuals' tax refunds.

Section 310.12–1 Form of Agreement

The form of agreement has been deleted in its entirety. Setting forth a required agreement in the Administration's regulations constrained the ability of the Administration and the Schools to modify the agreement to reflect changing circumstances. Not only would the agreements have to be modified, but also the regulations would have to be changed. Copies of the agreement may be obtained from the Office of Policy and Plans.

Subpart C—Admission and Training of Midshipmen at the United States Merchant Marine Academy

Section 310.51 Definitions

(b) *Act*—We update the term ''Act'' to include sections of the Maritime Education and Training Act of 1980, Public Law 96–453, as amended, which includes the changes effected by the National Defense Authorization Act for Fiscal Year 2004, Public Law 108–136, and any subsequent amendments.

(f) *Cost of Education Provided*—is a concept added by the National Defense Authorization Act for Fiscal Year 2004, Public Law 108–136, in connection with recovery of funds from individuals failing to perform their service obligations, both before and after graduation. It is the intent of the Act that the Administration recover the financial costs incurred by the Federal Government for providing training or financial assistance to students at the Academy. For students at the Academy, this means the pro rata cost of all charges incurred with respect to the Academy for a given fiscal year, including room, board, classroom academics, and other training activity costs as well as any direct financial assistance given to such individual.

(g)–(i)—Definitions under these designations were renumbered.

Section 310.58 Service Obligation for Students Executing or Reexecuting Contracts

Section 310.58(a)—The terms of the National Defense Authorization Act for Fiscal Year 2004, Public Law 108–136, apply to individuals executing service obligation contracts after November 24, 2003. No individual previously having executed a service obligation contract is required by virtue of the amendments of the Act to execute a new service obligation contract. Individuals executing contracts after November 24, 2003, even those who have already executed a service obligation contract, are required to execute the new service obligation contract if they receive new consideration from the Federal Government for such execution.

Section 310.58(a)(1)—Under former section 310.58(a)(1), the separation of an individual by the Academy released that individual from his or her obligation to complete the course of instruction at the Academy. By virtue of the changes in the law, the separation of an individual by the Academy no longer releases an individual from this obligation. An individual who is separated by the Academy is now in default of his or her service obligations and is liable for the remedies for failure to fulfill these obligations. Among these remedies are induction into military service or recovery by the Federal Government of the Costs of Education Provided.

Section 310.58(a)(3)—Under former section 310.58(a)(3), graduates were required to maintain their licenses for at least six (6) years following graduation. The previous law required the graduate to maintain a Coast Guard license at least equal to the license that such graduate had upon graduation from the Academy. The subsequent promulgation of STCW requirements created a situation wherein various graduates were required to take additional courses in order to maintain such a license. Given the unanticipated impact of the STCW requirements, the Administration determined that individuals graduating without the necessary STCW courses need not take these courses and can satisfy their service obligations by maintaining a more restricted type of Coast Guard license, other than a continuity license. Continuity licenses were not acceptable because they do not allow such graduates to sail in any capacity.

Individuals executing service obligation contracts after the effective date of the Act are now required to maintain their licenses in at least equal status to the status they had at the time of graduation (*i.e.*, the ability to sail without restrictions in both domestic and foreign commerce). Such graduates are required to take all courses necessary to maintain their licenses, even with respect to unforeseen future requirements. The type of Coast Guard license that is required to satisfy the service obligation of maintaining a license for at least six (6) years following graduation is a license containing appropriate national and international endorsements and certifications required by the United States Coast Guard for service both on domestic and international voyages. ''Appropriate'' in this instance means the same endorsements and certifications held at the date of graduation, or the equivalent. Restricted licenses limited in applicability to just portions of the domestic or international voyages do not satisfy this obligation, nor do continuity licenses. The Act confirmed the Administration's longstanding interpretation of the law in this respect—that graduates continue to maintain Coast Guard licenses that are

not more restricted than the licenses with which they graduated.

Section 310.58(a)(5) has been amended to reflect the statutory authorization of additional ways to perform the employment aspects of the service obligation requirements. The Act now allows employment within the Federal Government to satisfy the requirement that graduates ''serve in the foreign or domestic commerce'' or ''national defense'' of the United States. Such employment in the Federal Government must be significantly maritime-related and serve the national security interests of the United States.

The determination of whether such employment satisfies the service obligation requirements is made by the Administration. Examples of civilian employment that might satisfy the service obligation are civilian positions relating to vessel or port security in the Navy, the Department of Homeland Security, or the Transportation Security Administration.

''Significantly'' is equated to a material or essential portion of an individual's responsibilities. It does not mean a ''majority'' of such individual's responsibilities, but means more than just an incidental part.

Section 310.58(b) is amended for purposes of clarity.

Section 310.58(e)(1) Breach of Contract Before Graduation

Section 310.58(e)(1)(i)—This paragraph is substantially rewritten to conform to the new terms of the Act. Any individual who has attended the Academy for a minimum of two (2) academic years who fails to fulfill any of their service obligations may be ordered by the Secretary of Defense to active duty in the Armed Forces of the United States to serve a period of time not to exceed two (2) years. In cases of hardship or impossibility of performance of the provisions of the service obligation contract due to accident, illness or other justifiable reason, as determined by the Maritime Administrator, this requirement may be waived in whole or in part. See section 310.58(f).

Section 310.58(e)(1)(ii)—This paragraph contains a provision set forth in the Act. It authorizes the Secretary of Transportation, acting through the Maritime Administrator, to take action against defaulting individuals to recover the Cost of Education Provided from individuals who have attended the Academy for more than two (2) academic years, but have not yet graduated.

Section 310.58(e)(1)(iii)—For purposes of paragraph (e)(1)(i) of this section, an ''academic year'' is defined as the completion by a student of a total of three (3) trimesters, whether at the Academy or at sea. Thus, liability under paragraph (e)(1)(i) begins for students when they begin their seventh (7th) trimester, whether at the Academy or at sea.

Section 310.58(e)(2) Breach After Graduation

Section 310.58(e)(2)(i)—Individuals who breach their service obligations after graduation are subject to be ordered to active duty in the Armed Forces of the United States for a period of time of not less than three (3) years and not more than the unexpired portion of the five (5) years of service required in the foreign and domestic commerce or the national defense of the United States following graduation.

Section 310.58(e)(2)(ii)—If the Secretary of Defense is unable or unwilling to order an individual to active duty or if the Maritime Administrator determines that reimbursement of the Cost of Education Provided would better serve the interests of the United States, the Maritime Administrator may recover from the defaulting individual the Cost of Education Provided by the Federal Government.

Section 310.58(e)(2)(iii) sets forth the discretionary authority of the Maritime Administrator to reduce the amount to be recovered from such defaulting individual to reflect partial performance of service obligations and such other factors as the Maritime Administrator determines merit such reduction. This provision is in addition to the Maritime Administrator's authority to waive the service obligations as set forth in section 310.58(f).

Section 310.58(h)(2)(iii)—Reflects that graduates are required to keep the Office of Policy and Plans, as opposed to the Office of Maritime Labor, Training and Safety, aware of the graduates' current mailing addresses.

Section 310.58(i)—This new paragraph reflects that the Administration is now authorized to collect debts owed to the Federal Government by commencing court proceedings as well as utilizing the Federal debt collection procedures set forth in chapter 176, title 28 of the United States Code and other applicable administrative remedies for debt collection. Such administrative collection options include offsetting debts against defaulting individuals' tax refunds.

Regulatory Analyses and Notices

Executive Order 12866 and DOT Regulatory Policies and Procedures

This final rule is not considered a significant regulatory action under section 3(f) of Executive Order 12866 and, therefore, was not reviewed by the Office of Management and Budget. This final rule is not likely to result in an annual effect on the economy of $100 million or more. This final rule is also not significant under the Regulatory Policies and Procedures of the Department of Transportation (44 FR 11034, February 26, 1979). The economic impact associated with this rule, if any, should be minimal; therefore, further regulatory evaluation is not necessary. This final rule is intended only to update provisions in part 310 to conform to the National Defense Authorization Act for Fiscal Year 2004 and to make technical changes and corrections.

Administrative Procedure Act

The Administrative Procedure Act (5 U.S.C. 553) provides an exception to notice and comment procedures when they are unnecessary or contrary to the public interest. MARAD finds that under 5 U.S.C. 553(b)(3)(B), good cause exists for not providing notice and comment since this final rule only updates existing regulations to conform to the National Defense Authorization Act for Fiscal Year 2004 and makes non-substantive technical corrections. While MARAD solicited public comments on the interim final rule, no comments were received.

Regulatory Flexibility Act

The Maritime Administrator certifies that this final rule will not have a significant economic impact on a substantial number of small entities. This final rule is intended only to update provisions in part 310, which do not affect a substantial number of small entities, but instead affect the United States Merchant Marine Academy, State maritime academies, and students thereof.

Federalism

We have analyzed this final rule in accordance with the principles and criteria contained in Executive Order 13132 (Federalism) and have determined that it does not have sufficient federalism implications to warrant the preparation of a federalism summary impact statement. These regulations have no substantial effect on the States, the current Federal-State relationship, or the current distribution of power and responsibilities among

local officials. Therefore, consultation with State and local officials is not necessary.

Executive Order 13175

MARAD does not believe that this final rule will significantly or uniquely affect the communities of Indian tribal governments when analyzed under the principles and criteria contained in Executive Order 13175 (Consultation and Coordination with Indian Tribal Governments). Therefore, the funding and consultation requirements of this Executive Order do not apply.

Environmental Impact Statement

We have analyzed this final rule for purposes of compliance with the National Environmental Policy Act of 1969 (42 U.S.C. 4321 *et seq.*) and have concluded that under the categorical exclusions in section 4.05 of Maritime Administrative Order (MAO) 600–1, ''Procedures for Considering Environmental Impacts,'' 50 FR 11606 (March 22, 1985), neither the preparation of an Environmental Assessment, an Environmental Impact Statement, nor a Finding of No Significant Impact for this final rule is required. This final rule involves administrative and procedural regulations that have no environmental impact.

Unfunded Mandates Reform Act of 1995

This final rule does not impose an unfunded mandate under the Unfunded Mandates Reform Act of 1995. It does not result in costs of $100 million or more, in the aggregate, to any of the following: State, local, or Native American tribal governments, or the private sector. This final rule is the least burdensome alternative that achieves the objective of the rule.

Paperwork Reduction Act

This rulemaking contains no new or amended information collection or recordkeeping requirements that have been approved or require approval by the Office of Management and Budget.

List of Subjects in 46 CFR Part 310

Federal Aid Programs, Reporting and recordkeeping requirements, Schools, and Seamen.

■ Accordingly, the interim final rule amending 46 CFR part 310 that was published in the **Federal Register** on June 8, 2004 (69 FR 31897), is adopted as a final rule with the following changes.

PART 310—MERCHANT MARINE TRAINING

■ 1. The authority citation for part 310 continues to read as follows:

Authority: 46 App. U.S.C. 1295; 49 CFR 1.66.

■ 2. Amend § 310.7 by revising paragraph (b)(5) to read as follows:

§ 310.7 Federal student subsistence allowances and student incentive payments.

* * * * *

(b) * * *

(5) *Afloat employment year.* For purposes of the service obligation, a satisfactory year of afloat employment shall be the lesser of—

(i) 150 days; or

(ii) The number of days employed afloat that is at least equal to the median number of days of seafaring employment under articles achieved by deck or engine officers in the most recent calendar year for which statistics are available.

* * * * *

■ 3. Revise § 310.12–1 to read as follows:

§ 310.12–1 Form of Agreement.

The form of agreement between the Maritime Administrator and schools for annual maintenance and support payments, Federal student subsistence and incentive payments and fuel assistance under the 1958 Act and the Act may be obtained from the Office of Policy and Plans, Maritime Administration, 400 7th St., SW., Washington, DC 20590.

■ 4. Amend § 310.58 by revising paragraph (b) to read as follows:

§ 310.58 Service obligation for students executing or reexecuting contracts.

* * * * *

(b) *Service as a merchant marine officer.* For purposes of the service obligation set forth in paragraph (a)(5)(i) of this section, a satisfactory year of service on vessels in the United States merchant marine as a merchant marine officer shall be the lesser of—

(1) 150 days; or

(2) The number of days that is at least equal to the median number of days of seafaring employment under articles achieved by deck or engine officers in the most recent calendar year for which statistics are available.

* * * * *

By Order of the Maritime Administrator.

Dated: May 12, 2005.

Joel C. Richard,

Secretary, Maritime Administration.

[FR Doc. 05–9824 Filed 5–18–05; 8:45 am]

BILLING CODE 4910–81–P

DEPARTMENT OF TRANSPORTATION

Pipeline and Hazardous Materials Safety Administration

49 CFR Parts 192 and 195

[Docket No. RSPA–03–15852; Amdt. Nos. 192–100, 195–84]

RIN 2137–AD96

Pipeline Safety: Pipeline Operator Public Awareness Program

AGENCY: Pipeline and Hazardous Materials Safety Administration (PHMSA), U.S. Department of Transportation (DOT).

ACTION: Final rule.

SUMMARY: This Final Rule amends the requirements for pipeline operators to develop and implement public awareness (also known as public education) programs. The changes are part of PHMSA's [1] Office of Pipeline Safety's (OPS) broad pipeline communications initiative to promote pipeline safety. Promoting pipeline safety requires enhanced communications (by pipeline operators) with the public to increase public awareness of pipeline operations and safety issues. The amendments for developing and implementing public awareness programs address the requirements of the Pipeline Safety Improvement Act (PSIA) of 2002 [2] and incorporate by reference the guidelines provided in the American Petroleum Institute (API) Recommended Practice (RP) 1162, ''Public Awareness Programs for Pipeline Operators.'' [3]

DATES: *Effective Date:* This final rule takes effect on June 20, 2005.

The incorporation by reference of API RP 1162 in this Final Rule was approved by Director of the Federal Register as of June 20, 2005.

FOR FURTHER INFORMATION CONTACT: Blaine Keener by phone at 202.366.0970, by mail at 400 7th St., SW., Room 2103, Washington, DC 20590, or by e-mail at *blaine.keener@dot.gov.*

[1] The Research and Special Programs Administration (RSPA) was recently renamed the Pipeline and Hazardous Materials Safety Administration (PHMSA). The history of this rulemaking includes references to both RSPA and PHMSA. For the purposes of this document, the terms are used interchangeably.

[2] Section 5 of the Pipeline Safety Improvement Act (PSIA) of 2002 (Pub. L. 107–55, 49 U.S.C. 60116, December 12, 2002).

[3] API RP 1162 provides guidance on development, implementation, and evaluation of pipeline operator ''public awareness programs.'' Note that ''public education programs,'' as used in this rule, and ''public awareness programs,'' as used in API RP 1162, are considered to be the same and are used interchangeably.

SUPPLEMENTARY INFORMATION:

I. Background

This Final Rule concerns pipeline efforts to improve public awareness of pipeline operations and safety issues through enhanced communications with:

- The public (including residents and places of congregation, such as businesses, schools, hospitals, prisons, and other places where people gather) in the pipeline vicinity and its associated rights-of-way and pipeline facilities;
- State and local emergency response and planning officials (*e.g.*, State and county emergency management agencies (EMAs) and local emergency planning committees (LEPCs)) and first responder organizations;
- Local public officials and governing councils of affected municipalities and school districts; and
- Excavators.

Effective public awareness programs are vital to continued safe pipeline operations. Such programs are an important factor in establishing communications with affected stakeholders, providing information necessary to enhance public awareness of pipelines, and communicating stakeholder roles relative to pipeline safety. Effective programs also can increase awareness and understanding of the important energy transportation role of pipelines, pipeline operations, associated public and environmental risks, and the preventive and mitigative steps taken to reduce those risks. Additionally, they can improve results in damage prevention, reduce encroachments on pipeline rights-of-way, improve pipeline safety and environmental performance, and enhance emergency response coordination.

This change in requirements for pipeline operator public awareness programs is part of PHMSA's broad effort to enhance safety by promoting improved public communications among the pipeline industry and government pipeline regulators. The promulgation of new requirements for pipeline operator public awareness programs also responds to provisions in the PSIA of 2002 calling for the Secretary of Transportation to issue standards prescribing the elements of an effective public education program.

Statutory Considerations & Comments

The statutory provision specific to public education is discussed elsewhere in this document. In general, OPS authority to issue safety standards to the design, construction, operation, replacement, and maintenance of pipelines is found in 49 U.S.C. 60102(a). Pursuant to 49 U.S.C. 60102(b), a pipeline safety standard must be practicable and designed to meet the need for pipeline safety and for protection of the environment. In order to accomplish this, OPS must consider a number of factors in issuing a safety standard. These factors include the relevant available pipeline safety and environmental information, the appropriateness of the standard for the particular type of facility, the reasonableness of the standard, and reasonably identifiable or estimated costs and benefits.

OPS considered these factors in developing this rule and provides its analysis in the appropriate paragraphs of the preamble to this Final Rule. OPS also considered comments received from the public along with comments and recommendations of the Technical Pipeline Safety Standards Committee that are discussed below.

Pipeline Safety Improvement Act of 2002

On December 17, 2002, the President signed into law the PSIA of 2002. Section 5 mandates public education program activities by pipeline operators, the Secretary of Transportation, and appropriate State agencies. It requires owners or operators of a gas or hazardous liquid pipeline facility to carry out a continuing program to educate the public on:

- Use of a one-call notification system prior to excavation and other damage prevention activities;
- Possible hazards associated with unintended releases from the pipeline facility;
- Physical indications that such a release may have occurred;
- Steps that should be taken for public safety in the event of a pipeline release; and
- Procedures to report such an event.

Not later than 12 months after the date of enactment, each owner or operator of a gas or hazardous liquid pipeline facility was to review its existing public education program(s) for effectiveness and modify the program as necessary. The completed program was to include activities to advise affected municipalities, school districts, businesses, and residents of pipeline facility locations. It was to be submitted to the Secretary or, the appropriate State agency, and would be periodically reviewed. The Secretary was authorized to issue standards prescribing the elements of an effective public education program and to develop material for program use.

Self-Assessment Forms

To support pipeline operators in partially addressing the PSIA requirements, PHMSA prepared a self-assessment form for use in reviewing existing public education programs. The completed self-assessment aided and supported the operator in reviewing its program and in determining whether its adequacy and effectiveness in conveying the messages defined in the PSIA to the appropriate audiences. This assessment served as the basis for individual operators to define any necessary program improvements. The aggregate results of the self-assessments help PHMSA and the industry in identifying areas where operator programs overall are weak or in need of additional focus.

A draft self-assessment form was presented to attendees at two public workshops held during September 2003, in Houston, Texas and Baltimore, Maryland for comment. In November 2003, PHMSA issued an advisory bulletin [4] advising all pipeline operators to complete and return the self-assessment form by December 17, 2003 (the deadline prescribed in the PSIA). Aggregate results from those self-assessments may be viewed online at *http://primis.rspa.dot.gov/edu/RP1162/SA_Statistics_050704.pdf.*

PHMSA is promulgating this Final Rule requiring operators to submit their completed programs to the Secretary of Transportation in fulfillment and implementation of PSIA's Section 5 requirements. In setting forth new requirements for pipeline operator public awareness programs, PHMSA is also responding to provisions in Paragraph C, AStandards,'' of Section 5 of the PSIA for the Secretary of Transportation to issue standards prescribing the elements of an effective public education program.

Standards Committees Process

PHMSA has two legislatively mandated technical advisory committees. The Natural Gas Pipeline Safety Act of 1968 required establishment of the Technical Pipeline Safety Standards Committee (TPSSC). The Hazardous Liquid Safety Act of 1979 required creation of the Technical Hazardous Liquid Pipeline Safety Standards Committee (THLPSSC). The Committees' primary purpose is to review proposed pipeline safety standards for technical feasibility,

[4] 68 FR 66155, November 25, 2003, Pipeline Safety: Self-Assessment of Public Education Programs. This advisory bulletin may be viewed at http://ops.dot.gov/whatsnew/AdvBulletinADB0308.pdf.

reasonableness, cost-effectiveness, and practicability. The Committees also serve as a sounding board for discussing pipeline safety policy issues as well as legislative initiatives. Each group is composed of a balanced representation of Federal, State and local government agencies, the pipeline industry, and the public. In 2000, PHMSA (then known as the Research and Special Programs Administration (RSPA)), sponsored a pipeline communications exploratory group under its technical advisory committees. The groups met to explore the subject of pipeline communications and to identify opportunities for improvement. In December 2004, the two groups concurred with this rule's issuance.

Communications Efforts

PHMSA increased its efforts to communicate with the public regarding pipeline safety during several regulatory public meetings on Liquid and Gas Pipeline Integrity Management and Operator Qualification (see Docket Nos. RSPA–99–6355, RSPA–00–7408, and RSPA–00–7666). These efforts also included public meetings and public-access Web sites. These meetings provided opportunities for the public and other stakeholders to comment on the pipeline information needs of the public, local officials, and emergency responders.

PHMSA sponsored other public meetings to provide open forums for the exchange of pipeline safety information among PHMSA, community representatives, environmental organizations, first responders, city/county/state governments, and pipeline operators. Public stakeholders often expressed their desire to receive more specific information on pipeline communication initiatives.

Consequently, on January 29, 2003, PHMSA and the Washington State Utilities and Transportation Committee (WUTC) co-sponsored a public meeting on pipeline communications at the Bellevue Community College in Bellevue, WA. The meeting included panel discussions on current PHMSA initiatives, the development of API RP 1162, integrity management communications, and pipeline performance metrics. A meeting transcript and a copy of presentations can be found at *http://primis.rspa.dot.gov/comm/Bellevue_2003_01_29.htm.*

PHMSA public communication initiatives include:

- Development of a public Web site for pipeline information (*http://primis.rspa.dot.gov/comm*);
- Creation of the Community Assistance and Technical Services (CATS) program and staffing new positions within each PHMSA Pipeline Safety regional office. CATS is an innovative program designed to meet the growing demand for enhanced stakeholder communications and to help facilitate permitting processes related to pipeline safety. The CATS mission is to advance public safety, environmental protection, and pipeline reliability by facilitating clear communications among all pipeline stakeholders, including the public, the operators, and government officials;
- Established a partnership with the National Association of State Fire Marshals (NASFM) to provide resources. This includes developing information and training aimed at enhancing the safety of first responders responding to pipeline accidents and of those assessing pipeline security risks. This collaboration will: assure that firefighters can safely respond to pipeline incidents; encourage NASFM members to join with the damage prevention community; encourage industry and local officials to ensure pipeline safety; educate the public on how to live safely near pipelines; improve pipeline awareness and improve security preparedness; and help with accident reporting and investigation for a better understanding of causes and consequences;
- In 2002, PHMSA asked the Transportation Research Board (TRB) of the National Academies to examine model land use practices by local communities, with an objective to develop guidance and enhance communications to better manage pipeline encroachment risks. The TRB was asked to: Examine evidence of risks to the public with increased development and population in proximity to pipelines; understand how these risks vary based on differences in product, pipeline characteristics, and other features; and explore the feasibility of establishing development setbacks that local governments might use in regulating encroaching development around existing pipelines. The TRB study was subsequently modified to address a PSIA requirement that PHMSA and the Federal Energy Regulatory Commission (FERC) conduct a study of population encroachment on pipeline rights-of-way. The results of the TRB study are published in TRB Special Report 281, ''Transmission Pipelines and Land Use: A Risk-Informed Approach.'' PHMSA submitted an implementation plan to Congress on January 10, 2005; it addresses the TRB recommendations made in SR 281;
- In 1988, the TRB published Special Report (SR) 219: Pipelines and Public Safety. It assessed the adequacy of measures used to protect the public near pipelines. TRB SR 219 examined land use adjacent to pipelines and methods that could be used to increase the public safety. PHMSA responded to recommendations for damage prevention, land use, and emergency preparedness measures designed to help reduce the risks due to pipeline accidents;
- In 1998, PHMSA initiated and sponsored a damage prevention practices study associated with existing one-call notification systems. The study responded to authorizations in the Transportation Equity Act for the 21st Century (TEA–21), signed into law on June 9, 1998. It examined damage prevention practices to determine which were most effective in protecting the public, excavators, and the environment, and preventing disruptions to public services and underground facilities. Results were reported in the landmark ''Common Ground Study of One Call Systems and Damage Prevention Best Practices'' in which 133 damage prevention Best Practices were identified; and
- Prior to passage of the PSIA of 2002, the pipeline industry began developing recommendations for pipeline operator public awareness programs, which resulted in establishing the API RP 1162, ''Public Awareness Programs for Pipeline Operators.'' API developed RP 1162 with extensive collaboration with various segments of the pipeline industry along with input from PHMSA and State pipeline regulators. PHMSA aggressively promoted the development of API RP 1162.[5] PHMSA acknowledges the substantial work and collaboration that went into the development of API RP 1162 by incorporating it by reference into this rule.

American Petroleum Institute Recommended Practice 1162

In 2001, API began developing a new recommended practice for hazardous liquid pipeline operator public awareness programs. PHMSA recognized the potential to support the recommended practice its efforts to promote safety through improved public education and communications. At the request of, and with the support of PHMSA, API expanded the scope of the recommended practice to include gas transmission and distribution operators.

[5] A link to API RP 1162 on the API standards Web site is at *http://primis.rspa.dot.gov/edu/rp1162.htm.*

This was accomplished through formation of a multi-industry task force including representation from hazardous liquid, gas transmission, and gas distribution pipeline operators, as well as trade organizations representing the individual industry segments. Representatives of PHMSA and the National Association of Pipeline Safety Representatives (NAPSR) (representing State pipeline regulatory agencies) participated in meetings and provided input into both the development process and the content of the document known as API RP 1162. From the beginning of the process, PHMSA indicated to the task force and at public meetings that it would consider incorporating the guidance provided in RP 1162 within its planned rulemaking on operator public education programs.

The development of API RP 1162 complies with API Procedures for Standards Development, as approved by the American National Standards Institute (ANSI). More information on the development of RP 1162 and on API procedures can be found online at *http://committees.api.org/pipeline/standards/index.html.* Stakeholders had opportunities to provide comment during the document's development; this information is available in the docket.

Industry trade organizations representing pipeline operators generally agreed with the direction of PHMSA and the work of the API RP 1162 task force. In response, several trade organizations issued a Joint Statement on Enhancing Public Awareness Programs for the Pipeline Industry (May 28, 2003), which committed the industry to adopting ''* * * a consensus standard establishing a baseline public awareness program for pipeline operators * * *'' and urged PHMSA ''* * * to satisfy any need to supplement current requirements for public awareness programs by incorporating [API] RP 1162 into its regulations * * *.'' Executives from leading industry associations and organizations signed the joint statement.

Notice of Proposed Rulemaking

On June 24, 2004, PHMSA issued a Notice of Proposed Rulemaking (NPRM) with request for comment (68 FR 35279), with comment period closing on August 23, 2004. PHMSA proposed to require each operator of a hazardous liquid or gas pipeline to develop, implement, and maintain a public education program compliant with the requirements of API RP 1162. The proposal applied to all pipelines regulated under 49 CFR Parts 192 and 195, including:

- Interstate and intrastate hazardous liquid transmission pipelines;
- Interstate and intrastate natural gas transmission pipelines;
- Natural gas distribution pipelines; and
- Oil and gas gathering lines.

PHMSA proposed that operators be required to develop and implement public awareness programs addressing specific stakeholder audiences. PHMSA noted that API RP 1162 provides program guidance for each audience regarding the types of messages to be delivered, the message delivery frequency, and the methods/media to deliver the message. API RP 1162 includes baseline program guidance applicable throughout the operator's pipeline system. It also includes supplemental guidance providing considerations to determine where, when, and how to enhance the baseline program to provide the appropriate level of public awareness outreach. Baseline and supplemental program recommendations for different pipeline operator types are summarized in a set of tables in API RP 1162. Additionally, the document provides that each operator establish and periodically update a written public education program covering all specified program elements.

II. Comment Discussion

In response to the NPRM, PHMSA received written comments from: Pipeline operator companies (21); pipeline industry trade associations (8); the Gas Pipeline Technical Committee (GPTC); third-party vendors to the pipeline industry (2); members of the public (7); and the Washington Utilities and Transportation Commission, a state pipeline safety regulatory agency.

Industry comments were received from: American Gas Association (AGA); American Petroleum Institute (API); American Association of Oil Pipelines (AOPL); American Public Gas Association (APGA); Atmos Energy; Burrton, KS, Municipal Gas Distribution (Jon Roberts); Columbia Gas Transmission Corporation; Duke Energy Field Services; Dynegy Midstream Services L.P.; El Paso Corporation; Enbridge Energy Company, Inc.; Gas Piping Technology Committee (GPTC); KeySpan Energy; Kinder Morgan Inc.; Michigan Consolidated Gas Company (MichCon); Nicor Gas; NiSource Energy Service Company; Paiute Pipeline (Southwest Gas Corporation); PECO; Peoples Gas Light and Coke Company; Pipeline Association for Public Awareness; PSEG Services Corporation; Southern California Gas Company and San Diego Gas and Electric; Southern Union Co.; Southwest Gas Corporation; Sunoco Logistics Partners, L.P.; Texas Oil and Gas Association (TxOGA); Interstate Natural Gas Association of America (INGAA); Texas Pipeline Association; and Xcel Energy.

Third-party vendors to the pipeline industry submitting comments include Oleksa & Associates and Metrix Matrix Inc. Organizations and individuals representative of the public who submitted comments include: The Pipeline Safety Trust; the Washington State Citizens Committee on Pipeline Safety; and five individuals.

Commenters overall were supportive of the need for pipeline operators to conduct and manage effective public awareness/education programs, acknowledging that such programs were vital to the safe operation of oil and gas pipelines. Commenters were generally supportive of the proposal to incorporate API RP 1162 by reference into rule. However, some commenters opposed the proposed approach of incorporating API RP 1162 in toto as a regulatory requirement, as described in the NPRM. These along with many others offered particular comments or suggested alternatives. Some commenters considered that the proposed rule does not go far enough in requiring operators to provide specific other information that is outside the current scope of the proposed rule, or did not require a broad enough outreach to the general public.

The comments, discussed below, have been categorized as follows:

A. Need for the Rule.
B. Incorporation of API RP 1162 In Toto as a Regulatory Requirement.
C. ''Awareness'' versus ''Education'.
D. Inspection, Enforcement, and Compliance.
  1. Inspection Program.
  2. Cooperative Efforts.
  3. Implementation.
  4. Evaluation Frequency.
  5. Submission Periods.
E. Scope of the New Rule.
  1. Information Breadth.
  2. Rule Overlap.
  3. Emergency Response Plans.
F. Resource Requirements.

A. The Need for a Rule on Pipeline Operator Public Education Programs

Several commenters opposed the adoption of API RP 1162 into a new rule based on the thought that there is no need for a new rule on public education at all. Two commenters stated that existing rules (49 CFR 192.614, 192.615, and 192.616) are adequate. One noted that those existing rules should be more

effectively enforced. Another commenter opposed the proposed rule since the PSIA of 2002 was ''clear and unambiguous'' and that requiring operators to have effective public awareness programs through further regulation would be counterproductive. This and other commenters noted that the PSIA does not require DOT to develop standards prescribing the elements of public education programs. Another commenter opposed incorporating API RP 1162 into regulations until it has a chance to mature as operators implement it into their procedures.

Response

PHMSA recognizes that operators should have existing public education programs under the current regulations requiring operators to conduct damage prevention programs (§ 192.614 and § 195.442), establish emergency plans and maintain liaison with emergency officials (§ 192.615 and § 195.402), and conduct public education programs (§ 192.616 and § 195.440). However, PHMSA considers that these current regulations are limited in scope and specificity. Additionally, the results of operator self-assessments and public meetings revealed that some operators do not have adequate public education programs and are in need of specific guidance to comply.

The broadened scope and added specificity provided in the guidance presented in API RP 1162 will be of significant benefit. Increased public awareness obtained through enhanced operator public education programs is expected to result in fewer pipeline accidents from third-party damage and improved emergency response if pipeline accidents do occur. On this basis, pipeline industry organizations have already endorsed the incorporation by reference of API RP 1162 into new regulatory requirements for pipeline operator public education programs.

Finally, the PSIA demonstrates Congressional intent and provides that DOT may issue standards prescribing elements of effective public education programs for pipeline operators. This rulemaking will assist operators in complying with Congressional mandates. PHMSA considers development and implementation of public education programs consistent with the guidance provided in API RP 1162 as enabling pipeline operators and regulators to evaluate operator programs for compliance and effectiveness. We believe the guidance will enable operators to determine where and how public awareness programs need to be modified to ensure their effectiveness.

B. Incorporation of API RP 1162 In Toto as a Regulatory Requirement

Eight commenters, including APGA, AGA, and GPTC, opposed the rule as proposed on the basis that API RP 1162 should not be incorporated in its entirety and its guidance and recommendations should not be translated into requirements. Eleven other commenters, including API, AOPL, and INGAA expressed their support for the proposed rule and support for PHMSA's intent to incorporate API RP 1162 by reference. However, these commenters also cautioned that the effort was not developed, nor was it intended, as a requirements document. They noted that PHMSA should clarify specifically what is required of operators and that API RP 1162 should be referenced as Aguidance material only.''

These commenters noted that PHMSA should ensure that the flexibility afforded operators to develop and implement effective public awareness programs according to their needs and unique system parameters, as was intended in API RP 1162, is retained. Their comments address the perception that API RP 1162 is a recommended practice providing guidance affording an operator flexibility to develop an optimum public awareness program, through the use of enabling words such as ''should,'' ''might,'' ''could,'' ''may,'' and ''can.'' They consider that such flexibility will be lost if RP 1162 is incorporated *in toto* into a rule. Concern exists that the guidance and recommendations would translate into requirements as those enabling words morph, through interpretation, into the prescriptive ''shall.''

More than one commenter noted they realized this perception in the NPRM preamble language which conveyed that the guidance of API RP 1162 was to become requirements to which operators must comply. At least three commenters quoted or paraphrased the preamble to the NPRM in support of this perception. The commenters noted that the NPRM stated: ''The rule requires each pipeline operator to develop * * * a public education program that complies with the requirements of API RP 1162 * * *. API RP 1162 defines requirements * * * including baseline requirements * * * and supplemental requirements * * *. Operators are required to consider* * *.'' Multiple commenters noted that the proposed rule will make mandatory every guidance recommendation in API RP 1162 and that this will remove all flexibility for operators written into the practice and that will have a negative impact on operator public awareness programs. Several commenters also noted that this will lead to confusion among operators and regulators alike about what is enforceable and what is not.

The APGA and the AGA both noted that PHMSA should reiterate its discussion published in 64 FR 15929, April 2, 1999, of how consensus standards, recommended practices, and publications are incorporated by reference. PHMSA considers that when an industry recommended practice is incorporated by reference into regulation, operators ''would be expected to follow the provisions [of the recommended practice] unless the operator notes in the procedural manual the reasons why compliance with all or certain provisions is not necessary * * *.''

Response

PHMSA recognizes that adoption of recommended practices into regulation can cause some concern as the distinction between requirements and recommendations is not always clear. Under this rule, each operator is required to develop and implement a public awareness program consistent with the guidance provided in API RP 1162. The operator's program must include all applicable elements of API RP 1162 that are baseline, or the operator must document the rationale and justification for why those elements are not included in its program. The operator must also document consideration as to the supplemental elements of RP 1162 and provide the basis for program inclusion or exclusion of those elements. The Appendices to RP 1162 are intended to provide additional information, clarification, and examples relative to the guidance provided in the practice.

There is no intent that every occurrence of ''should,'' ''may,'' or ''can'' found in API RP 1162 be translated to ''shall'' as a result of incorporation of the practice by reference into the rule. As noted by APGA and AGA, PHMSA previously expressed[6] its position regarding operator consideration of practices that are incorporated into regulation by reference. The Final Rule is consistent with that position; operators will have to follow the provisions of the practice unless the operator notes in its procedural manual the reasons why compliance with all or certain provisions of the practice is circumstantially unnecessary.

[6] Reference 64 FR 15929, April 2, 1999.

In addition to developing public awareness programs reflecting consideration of the provisions of API RP 1162, under the PSIA of 2002, those operator programs shall specifically: Include provisions to educate the public on the use of a one-call notification system prior to excavation and other damage prevention activities; identify possible hazards associated with unintended releases from the pipeline facility; identify physical indications that such a release may have occurred; outline the steps that should be taken for public safety in the event of a pipeline release; and outline the steps on how to report such an event. The programs shall include activities to advise affected municipalities, school districts, businesses, and residents of pipeline facility locations.

C. ''Awareness'' Versus ''Education''

Several commenters suggested there was a distinction between public ''awareness'' as used in API RP 1162 and public ''education'' as used in the proposed rule. They proposed that PHMSA should clarify that the two terms refer to the same program obligation. One commenter said the use of 'awareness' is an ''improvement over 'education' in that 'awareness'' implies two-way communication instead of the one-way communication implied by 'education.' ''

Response

PHMSA considers ''public education programs,'' as used in the PSIA, and ''public awareness programs,'' as used in API RP 1162, to address the same concept. The level of public awareness regarding pipeline operations and safety can be improved only through demonstratively effective education and communication programs.

D. Inspection, Enforcement, and Compliance

1. Inspection Programs

Several commenters, including API, AOPL, Kinder-Morgan, and Enbridge, commented that PHMSA should consider using a centralized group to perform operator inspections and enforcement for the new rule rather than handling inspection and enforcement through separate field organizations. This, they noted, would allow PHMSA to designate and train a more specialized group of inspectors and would promote a more consistent approach in the interpretations of many aspects of API RP 1162 that are not prescriptive in nature. Some commenters used the analogy of PHMSA's integrity management approach wherein teams composed of inspectors from across different regions were used to inspect operators against program criteria.

Response

PHMSA will develop criteria to evaluate operator public awareness programs against the requirements of this rule. The use of a standard set of criteria will facilitate consistent requirements interpretations and operator program evaluations.

PHMSA is considering the use of an approach wherein a third-party contractor would serve as a clearinghouse. The contractor would perform the initial reviews of operator programs against pre-defined criteria for completeness and minimal adequacy. This third-party review would utilize a checklist approach to identify if operator programs included all of the elements of a fully-developed program consistent with the rule and with the guidance provided in API RP 1162. The results of such third-party reviews would be used to identify where best to use PHMSA inspector resources in inspecting particular operator programs in further detail in the field. One PHMSA emphasis is on building effective programs; consideration is being given to having the third-party contractor work interactively with operators, where appropriate, to establish a more fully-developed program.

2. Cooperative Efforts

Several commenters suggested PHMSA should provide clear direction to operators regarding the acceptability of cooperative or coalition efforts. These comments address the possibility that operators may want to join together cooperatively to achieve cost-effectiveness in outreach efforts along common rights-of-way or within geographic areas. Similarly, AGA and Southwest Gas Corporation noted that operators having transmission and distribution facilities within the same geographic area should have the flexibility to design either separate or common programs for those facilities. These comments pose the possibility that some operators may want to take advantage of surveys and evaluations performed by trade associations and others to demonstrate the effectiveness of their own outreach efforts.

Response

API RP 1162 provides general ''baseline'' program recommendations for the audiences, message content, and communication frequencies that operators should consider in the development and implementation of their public awareness programs. It also provides supplemental guidance that should be considered for use in particular situations where it is appropriate to enhance the baseline program. It does not specify details of how each operator is to achieve effective public awareness nor does it attempt to suggest which approach would be most effective in all cases. Rather, API RP 1162 specifically notes that it does not take into consideration the unique attributes and characteristics of individual pipeline operators' pipelines and facilities. Neither is PHMSA, in incorporating API RP 1162 by reference into this rule, attempting to define the method or approach operators must use (or not use) to achieve effective programs.

Each operator must consider the unique characteristics of its pipelines and facilities, including their geographic location and proximity to other facilities. Operators must then determine the methods and approach that will achieve the best results in ensuring that educational outreach efforts reach those audiences that may be affected by, and should be aware of, the operator's facilities. Similarly, operators must choose the most appropriate methods for evaluating program effectiveness. As noted in Section 8.4.2 of API RP 1162, an operator may choose to participate in and use the results of surveys performed by others to evaluate the effectiveness of its program. The operator is cautioned that surveys performed by others must allow the operator to demonstrate results relevant to the operator's own facilities and public awareness program.

3. Implementation

Several commenters noted that operators should be allowed from one to two years following publication of the Final Rule to develop and implement public education programs to meet the rule requirements. Some stated this time would be necessary for operators to ensure programs are fully compliant with the new regulation and to develop a schedule for implementation consistent with their annual budget cycles.

Response

Operators should have in place some level of existing public awareness/education programs under current regulations requiring operators to conduct damage prevention programs (§ 192.614 and § 195.442), to establish emergency plans and maintain liaison with emergency officials (§ 192.615 and § 195.402), and to conduct public

education programs (§ 192.616 and § 195.440). However, PHMSA recognizes that the additional efforts necessary to evaluate and further develop those programs, (consistent with this rule and the guidance provided in API RP 1162), and the efforts necessary to begin implementation of the enhanced programs, may take longer for some operators than others. Accordingly, operators must be prepared to submit for review their completed programs to the Secretary of Transportation or, in the case of an intrastate pipeline facility operator, the appropriate State agency, no later than 12 months following the publication date of the rule. As an exception, operators of small liquid propane distribution systems having less than 25 customers and master meter operators having less than 25 customers must be prepared to submit their completed programs to the appropriate regulatory agency for review no later than 24 months following the publication date of the rule. PHMSA encourages electronic submission of operator programs. Specific guidance regarding the exact timing and procedures for such submission will be provided in a future regulatory notice. Operator program documentation and evaluation results must be available for periodic review by appropriate regulatory agencies.

4. Evaluation Frequency

Several commenters noted that the rule should specify the frequency by which operators are required to evaluate their public awareness programs for effectiveness. The Washington Utilities and Transportation Commission (WUTC) considered that it is important in the early stages of implementing improved public education programs that operators conduct effectiveness reviews at least every two years, if not annually. WUTC noted that only by emphasizing results could the flexibility of the guidelines provided by API RP 1162 be retained while ensuring that operator programs are effectively reaching intended audiences. Others cautioned that it may be difficult for operators to draw a direct cause-and-effect relationship between enhanced public outreach and improved performance in damage prevention or emergency response. Some commented that it is important for operators to establish a baseline evaluation of their programs before making changes.

Response

PHMSA believes strongly that program evaluation is a key component for improving the effectiveness of operator public education programs and for improving pipeline safety awareness. Prior to the development of the industry standard API RP 1162, pipeline operators were required by regulation to have ongoing public education programs. However, without periodic evaluations to determine if those programs are reaching the intended audiences and increasing audience awareness of the appropriate and necessary safety information, the impact and effectiveness of an operator's program cannot be determined. Performing evaluations of the programs and making necessary adjustments are the only ways to ensure implementation as designed and effectiveness in achieving intended goals. Effective programs will increase: Pipeline safety awareness; understanding of pipeline operations; associated public and environmental risks; and the preventive and mitigative steps needed and taken to reduce those risks. Benefits can include: improved results in damage prevention; reduced encroachments on pipeline rights-of-way; improved pipeline safety and environmental performance; and enhanced emergency response coordination.

PHMSA considers it important that operators perform and document an initial baseline evaluation of their programs to validate the operator's program. Based upon the results of the evaluation, operators should revise or update their program(s), determine the frequency of subsequent evaluations, and document the basis for determining the frequency of subsequent evaluations consistent with the guidance provided in API RP 1162.

5. Submission Periods

Several commenters, including API, AOPL, Enbridge, and TxOGA, noted that operators should only be required to submit their public education programs to PHMSA one time. They felt that subsequent periodic submissions of operator programs or other related information and records should not be required, and that PHMSA should rely on its inspection program to evaluate continued operator compliance with the rule. Enbridge commented that ''the review of programs, materials and documentation at an Operator's workplace is far more useful for OPS than submission by mail of written programs and materials. * * * without interaction with the Operator * * * it will not be possible to complete a robust assessment of a program.'' Enbridge noted that it conducts outreach along many thousands of miles of pipe, which requires more than a million mailings and hundreds of records of the contacts with the target audience, and that periodic submissions of such information from all operators would be of no utility to PHMSA.

Response

Currently, PHMSA does not intend to periodically require operators to submit public awareness program documentation following the initial submission. However, if PHMSA believes an operator's program or its implementation is inadequate for safety, additional information may be required. Some state regulations may establish different requirements for submission of program material.

E. Scope of the New Rule

1. Information Breadth

API, AOPL, and INGAA commented on the intent and breadth of information to be communicated to stakeholder audiences under API RP 1162 and this rule. They commented that RP 1162 is only part of a broader effort to enhance public communications. They emphasized that RP 1162 is intended to focus affected stakeholders on the presence of pipelines and facilities in their area and on recognizing and responding to emergency situations. The recommended practice was not intended to address sharing of data and information on topics such as: (1) Performance of operator's pipeline safety and integrity programs; (2) detailed mapping; (3) communication needs explicit to the siting of new pipelines; or (4) individual accident/incident response activities. Commenters believe that work on these topics will be better served with different approaches.

Others however, called for the proposed rule to include even broader requirements. Suggestions included having operators make available to the public plans and program documentation related to each operator's: integrity management program; testing, maintenance, and repairs; pipeline operating history; and education program evaluation results.

Response

This rule focuses on requirements for operators to establish and implement public awareness programs to provide outreach to a variety of audiences. The primary focus of these programs, as mandated in the PSIA and as qualified in API RP 1162, is to educate the public on: Use of a one-call notification system prior to excavation and other damage prevention activities; possible hazards associated with unintended releases from the pipeline facility; physical

indications that such a release may have occurred; steps that should be taken for public safety in the event of a pipeline release; and procedures to report such an event. These programs will also include activities to advise and increase the awareness by affected municipalities, school districts, businesses, and residents of pipeline facility locations.

There is no intent to include within the scope of the rule requirements pertaining to operators, any additional communications regarding new pipeline siting or construction, emergency communications necessary as a result of a pipeline accident, or operator performance results addressed through other means of communication or regulatory reporting.

2. Rule Overlap

PHMSA received several comments regarding the scope of this rule and API RP 1162 relative to similar requirements under current regulations that require operators to conduct damage prevention programs (§ 192.614 and § 195.442), establish emergency plans, maintain liaison with emergency officials (§ 192.615 and § 195.402), and conduct public education programs (§ 192.616 and § 195.440). Additionally, AGA, TxOGA and several gas transmission pipeline operators commented that PHMSA should acknowledge an overlap between this rule's requirements and the public communication requirements found in the gas integrity management rule, 49 CFR 192.911(m).

Response

PHMSA recognizes that there is some overlap between this rule and the existing regulatory requirements cited in the comments, however, there is no conflict created by this rule's issuance. It requires operators to develop and implement improved public awareness programs consistent with the guidance provided in API RP 1162 and the requirements of the PSIA of 2002. Specific requirements for certain aspects of external communications by an operator are noted in the regulations cited in the comments. Those specific requirements may be enhanced by the guidance provided in API RP 1162. The existence of overlapping or similar requirements should not cause undue burden on any operator. In some cases, achieving compliance with one requirement may result in simultaneous compliance with another without the need for additional actions. Operators may already have or may develop integrated public awareness and external communication programs addressing compliance with all requirements under a single umbrella. Demonstrating compliance will simply involve demonstrating where and how the operator's program addresses the various elements. The issuance of this rule on pipeline operator public awareness programs does not impact or provide any relief to operators regarding compliance deadlines previously imposed by the gas integrity management regulatory requirement in 49 CFR 192.911(m) or the imposed deadline referenced in 49 CFR 192.907.

3. Emergency Response Plans

Southwest Gas Corporation and its subsidiary Paiute Pipeline Company commented that API RP 1162 provides that ''emergency preparedness response plans should be developed for use internally and externally with appropriate officials.'' They also noted that API RP 1162 indicates that ''the operator should include information about how emergency officials can access the operator's emergency response plan.'' Southwest and Paiute questioned if the emergency response plan referred to in API RP 1162 is the same as required by 49 CFR 192.615 and, if so, is it PHMSA's intent for operators to provide emergency officials a copy of the their emergency response plans.

Response

This rule on public awareness programs does not amend or change the requirements of § 192.615 Emergency Plans. Accordingly, operators are still required to establish and maintain liaison with appropriate emergency officials. Emergency liaison activities include communicating with officials regarding operator resources and actions during an emergency along with relating the emergency organization's capabilities and roles. There is no requirement within § 192.615 to provide emergency officials with copies of operator emergency response plans, especially not, as implied by the comments, for the purpose of non-operator persons assuming control of the pipeline system.

F. Resource Requirements

Many commenters disagreed with PHMSA's conclusion that the costs to implement this rule would be minimal. They pointed out that, although most operators have public education programs, the incremental effort to implement API RP 1162 could be significant. In particular, commenters noted that polling public knowledge (as specified in Section 8 of the recommended practice), could be a significant cost. The Interstate Natural Gas Association of America suggested that PHMSA recognize the value of operator cooperative evaluation and survey efforts. The Pipeline Association for Public Awareness also noted that cooperative efforts are one way to create efficiencies in reaching program goals.

Response

Much of the concern involving costs centered on the misunderstanding that the rule would have made all provisions of API RP 1162 mandatory. As described elsewhere in this notice, that is not the case. The Final Rule requires that operators develop and implement public awareness programs, which many operators have already done. Operators will need to evaluate their programs against the recommendations in API RP 1162 to determine if changes are appropriate. Many operators, particularly the larger ones, have already performed such evaluations, have determined that program modifications are necessary, and have begun making changes to their programs.[7] Operators will retain flexibility in deciding which recommendations are appropriate for their programs. Operators will need to document, in their procedures, why other elements need not be implemented given their circumstances. PHMSA acknowledges that this evaluation process will require more than a ''minimal'' effort. Still, we expect that the effort should be relatively small on a per operator basis. There may also be some costs to implement program changes. These, too, are expected to be relatively small on a per operator basis, since many operators already have programs that are expected to incorporate many of the recommendations of RP 1162 and some have begun to make changes to their programs based on that guidance.

PHMSA does acknowledge that cooperative efforts can be an appropriate means of controlling the costs associated with surveying public knowledge of pipeline safety. Operators can conduct surveys on their own, or they may participate in broader cooperative efforts. Where a broader effort is used, each operator will be expected to document its conduct and how it relates to the specific operator's program and circumstances.

[7] Results of Operator Self-Assessments Required In Response to the Pipeline Safety Improvement Act of 2002 (*http://primis.rspa.dot.gov/edu/RP1162/SA_Statistics_050704.pdf*).

Regulatory Analyses and Notices

Executive Order 12866 and DOT Regulatory Policies and Procedures

The Department of Transportation (DOT) does not consider this rule to be a significant regulatory action under section 3(f) of Executive Order 12866 (58 FR 51735; October 4, 1993). This rule is considered non-significant under DOT's regulatory policies and procedures (44 FR 11034: February 26, 1979). PHMSA prepared a Final Regulatory Evaluation for this rule and placed it in the public docket. The evaluation concludes that the RP 1162's adoption represents the most cost-effective alternative for implementing the public education provisions of PSIA 2002. Furthermore, PHMSA expects that the RP 1162's adoption will have a positive net benefit for pipeline operators, public safety, and the public environment. Most operators have existing public awareness programs, some of which may need to be expanded to meet the requirements of RP 1162. This is not expected to involve significant cost, as operators have flexibility in determining which provisions of the practice must be implemented in their programs. In addition to addressing the Congressional mandate, this rule increases public awareness obtained through the expansion of public education programs. It is expected to increase emergency response. Pipeline industry organizations endorsed the use of RP 1162 as the basis for pipeline operator public awareness/education programs.

Regulatory Flexibility Act

Under the Regulatory Flexibility Act (5 U.S.C. 601 *et seq.*), PHMSA must consider whether a rulemaking would have a significant impact on a substantial number of small entities.

PHMSA developed this rule in compliance with Executive Order 13272 (Proper Consideration of Small Entities in Agency Rulemaking) and DOT's procedures and policies to promote compliance with the Regulatory Flexibility Act. This ensures that the potential impacts of proposed rules on small entities are properly considered. The majority of gas transmission and hazardous liquid pipeline operators are large entities. Of the pipeline operators that are small entities, the majority are gas distribution operators.

Two trade associations represent natural gas distribution operators, The American Gas Association (AGA) and the American Public Gas Association (APGA). The APGA represents municipally-operated gas distribution systems. Conversations between PHMSA and APGA indicate that there are approximately 950 municipally operated gas distribution operators. APGA represents 600 of these. Of these 600, APGA estimates that 550 of them would be classified as small entities. The APGA held two teleconferences for its members. PHMSA reported in the notice of proposed rulemaking that APGA indicated compliance with the provisions of this rule would not represent a significant impact on its members, because of the possibility of flexibility in implementing the standard's requirements. APGA indicated that it would be willing to help small pipeline operators comply with this regulation through training and development of model programs.

APGA submitted comments on the rule concluding it would have significant impact on its members and that PHMSA had failed to satisfy the requirements of the Regulatory Flexibility Act. APGA's comments indicated that their conclusion was based on the belief that the rule, as proposed, had removed the flexibility inherent in the recommended practice by converting all of its provisions to binding requirements. As explained elsewhere in this preamble, the Final Rule does not have that effect. The rule requires that operators develop and implement public awareness programs, and references API RP 1162, but does not make all the provisions in the recommended practice mandatory. Operators must consider each provision and they must either implement each, or include in their procedures a documented reason why the provision is not appropriate for their public awareness program(s). Thus, some level of documentation is required for each provision, demonstrating its consideration and the basis for not incorporating it (if applicable). However, operator programs need not include all elements of the standard. PHMSA concludes that the flexibility that was assumed to exist at the time that APGA made the statements referenced in the notice of proposed rulemaking is still inherent in this Final Rule.

Based upon the above information showing that the economic impact of this rule on small entities will be minimal, I certify under section 605 of the Regulatory Flexibility Act that this regulation will not have a significant impact on a substantial number of small entities.

Paperwork Reduction Act

This rule contains some information collection requirements. As required by the Paperwork Reduction Act of 1995 (44 U.S.C. 3507(d)), DOT will submit a copy of the Paperwork Reduction Act analysis to the Office of Management and Budget for its review and to the docket. The requirements for information collection include development by each pipeline operator of a written public awareness program in compliance with API RP 1162. In addition, API RP 1162 includes requirements for public awareness program documentation and recordkeeping. A pipeline industry group developed the standard which reflects industry practices for these aspects of operator programs. Some operators may have increased required levels of documentation and recordkeeping, but these are not expected to be significant. Therefore, PHMSA concludes that this rule contains a total of 517,480 hours of additional paperwork burden for the 22,500 hazardous liquid, natural gas transmission, natural gas distribution, and master meter systems operators. PHMSA estimated that on average, it will take an operator an additional 23 hours annually to meet the paperwork burden which includes development of public awareness plan as well as recordkeeping requirements, at a total cost of $33.7 million.

Executive Order 13175

PHMSA analyzed this rule under the principles and criteria contained in Executive Order 13084 (Consultation and Coordination with Indian Tribal Governments). Because this rule does not significantly or uniquely affect the communities of the Indian tribal governments and does not impose substantial direct compliance costs, the funding and consultation requirements of Executive Order 13175 do not apply.

Executive Order 13132

PHMSA analyzed this rule under the principles and criteria contained in Executive Order 13132 (Federalism). This rule does not propose any regulation that: (1) Has substantial direct effects on the States, the relationship between the national government and the States, or the distribution of power and responsibilities among the various levels of government; (2) imposes substantial direct compliance costs on States and local governments; or (3) preempts State law. Therefore, the consultation and funding requirements of Executive Order 13132 (64 FR 43255; August 10, 1999) do not apply. It should be noted that representatives of the National Association of Pipeline Safety Representatives (NAPSR), which

includes State pipeline safety regulators, participated extensively in the development and review of API RP 1162, which forms the basis for this rule.

Unfunded Mandates

This rule does not impose unfunded mandates under the Unfunded Mandates Reform Act of 1995. It does not result in costs of $100 million or more to either State, local, or tribal governments, in the aggregate, or to the private sector. An industry working group, along with participants from NAPSR, developed API RP 1162, which forms the basis for the rule. Industry organizations endorsed this approach to setting requirements for operator public awareness programs. PHMSA believes this to be the least burdensome alternative that achieves the rule's objective.

National Environmental Policy Act

PHMSA analyzed this rule for purposes of the National Environmental Policy Act of 1969 (42 U.S.C. 4321 *et seq.*) and determined that this action will not have a significant impact on the environment. The Environmental Assessment of this rule is available for review in the docket.

Executive Order 13211

This rulemaking is not a ''significant energy action'' under Executive Order 13211 (Actions Concerning Regulations That Significantly Affect Energy Supply, Distribution, or Use). It is not likely to have a significant adverse effect on the supply, distribution, or use of energy. Further, this rulemaking has not been designated by the Administrator of the Office of Information and Regulatory Affairs as a significant energy action.

List of Subjects

49 CFR Part 192

Pipeline safety, Incorporation by reference, Reporting and recordkeeping requirements.

49 CFR Part 195

Pipeline safety, Incorporation by reference, and Reporting and recordkeeping requirements.

■ In consideration of the foregoing, PHMSA amends parts 192 and 195 of Title 49 of the Code of Federal Regulations as follows:

PART 192—TRANSPORTATION OF NATURAL AND OTHER GAS BY PIPELINE: MINIMUM FEDERAL SAFETY STANDARDS

■ 1. The authority citation for Part 192 continues to read as follows:

Authority: 49 U.S.C. 5103, 60102, 60104, 60108, 60109, 60110, 60113, 60116, and 60118; and 49 CFR 1.53.

■ 2. Section 192.7 is amended in the table in paragraph (c)(2) by adding a new item B.(5) to read as follows:

§ 192.7 Incorporation by reference.

* * * * *

(c) * * *

(2) * * *

Source and name of referenced material	49 CFR reference
* * * * * * *	
B. * * *	
(5) API Recommended Practice 1162 ''Public Awareness Programs for Pipeline Operators,'' First Edition (December 2003)	§ 192.616
* * * * * * *	

■ 3. Section 192.616 is revised to read as follows:

§ 192.616 Public awareness.

(a) Each pipeline operator must develop and implement a written continuing public education program that follows the guidance provided in the American Petroleum Institute's (API) Recommended Practice (RP) 1162 (IBR, see § 192.7).

(b) The operator's program must follow the general program recommendations of API RP 1162 and assess the unique attributes and characteristics of the operator's pipeline and facilities.

(c) The operator must follow the general program recommendations of API RP 1162, unless the operator provides justification in its program or procedural manual as to why compliance with all or certain provisions of the recommended practice is not practicable and not necessary for safety.

(d) The operator's program must specifically include provisions to educate the public, appropriate government organizations, and persons engaged in excavation related activities on:

(1) Use of a one-call notification system prior to excavation and other damage prevention activities;

(2) Possible hazards associated with unintended releases from a gas pipeline facility;

(3) Physical indications that such a release may have occurred;

(4) Steps that should be taken for public safety in the event of a gas pipeline release; and

(5) Procedures for reporting such an event.

(e) The program must include activities to advise affected municipalities, school districts, businesses, and residents of pipeline facility locations.

(f) The program and the media used must be as comprehensive as necessary to reach all areas in which the operator transports gas.

(g) The program must be conducted in English and in other languages commonly understood by a significant number and concentration of the non-English speaking population in the operator's area.

(h) Operators in existence on June 20, 2005, must have completed their written programs no later than June 20, 2006. As an exception, operators of small propane distribution systems having less than 25 customers and master meter operators having less than 25 customers must have completed development and documentation of their programs no later than June 20, 2007. Upon request, operators must submit their completed programs to PHMSA or, in the case of an intrastate pipeline facility operator, the appropriate State agency.

(i) The operator's program documentation and evaluation results must be available for periodic review by appropriate regulatory agencies.

PART 195—TRANSPORTATION OF HAZARDOUS LIQUIDS BY PIPELINE

■ 4. The authority citation for part 195 continues to read as follows:

Authority: 49 U.S.C. 5103, 60102, 60104, 60108, 60109, 60116, 60118; and 49 CFR 1.53.

■ 5. Section 195.3 is amended in the table in paragraph (c) by redesignating items B.(13) through B.(16) as B.(14)

through B.(17) and adding a new item B.(13) to read as follows:

§ 195.3 Material incorporated by reference.

(c) * * *

* * * * *

Source and name of referenced material	49 CFR reference
* * * * * * *	
B.* * *	
(13 API Recommended Practice 1162 ''Public Awareness Programs for Pipeline Operators,'' First Edition (December 2003).	§ 195.440
* * * * * * *	

■ 6. Section 195.440 is revised to read as follows:

§ 195.440 Public awareness.

(a) Each pipeline operator must develop and implement a written continuing public education program that follows the guidance provided in the American Petroleum Institute's (API) Recommended Practice (RP) 1162 (IBR, see §195.3).

(b) The operator's program must follow the general program recommendations of API RP 1162 and assess the unique attributes and characteristics of the operator's pipeline and facilities.

(c) The operator must follow the general program recommendations, including baseline and supplemental requirements of API RP 1162, unless the operator provides justification in its program or procedural manual as to why compliance with all or certain provisions of the recommended practice is not practicable and not necessary for safety.

(d) The operator's program must specifically include provisions to educate the public, appropriate government organizations, and persons engaged in excavation related activities on:

(1) Use of a one-call notification system prior to excavation and other damage prevention activities;

(2) Possible hazards associated with unintended releases from a hazardous liquid or carbon dioxide pipeline facility;

(3) Physical indications that such a release may have occurred;

(4) Steps that should be taken for public safety in the event of a hazardous liquid or carbon dioxide pipeline release; and

(5) Procedures to report such an event.

(e) The program must include activities to advise affected municipalities, school districts, businesses, and residents of pipeline facility locations.

(f) The program and the media used must be as comprehensive as necessary to reach all areas in which the operator transports hazardous liquid or carbon dioxide.

(g) The program must be conducted in English and in other languages commonly understood by a significant number and concentration of the non-English speaking population in the operator's area.

(h) Operators in existence on June 20, 2005, must have completed their written programs no later than June 20, 2006. Upon request, operators must submit their completed programs to PHMSA or, in the case of an intrastate pipeline facility operator, the appropriate State agency.

(i) The operator's program documentation and evaluation results must be available for periodic review by appropriate regulatory agencies.

Issued in Washington, DC, on May 5, 2005.

Stacey L. Gerard,

Acting Assistant Administrator/Chief Safety Officer, Pipeline and Hazardous Materials Safety Administration.

[FR Doc. 05–9464 Filed 5–18–05; 8:45 am]

BILLING CODE 4910–60–P

DEPARTMENT OF TRANSPORTATION

National Highway Traffic Safety Administration

49 CFR Parts 541, 543, and 545

[Docket No. NHTSA–2005–21233]

RIN 2127–AJ51

Federal Motor Vehicle Theft Prevention Standard

AGENCY: National Highway Traffic Safety Administration (NHTSA), Department of Transportation (DOT).

ACTION: Final rule; response to petitions for reconsideration.

SUMMARY: This final rule responds to petitions for reconsideration of the agency's newly expanded parts marking requirements. The Anti Car Theft Act of 1992 required NHTSA to conduct a rulemaking to extend the parts marking requirements to below median theft rate passenger cars and multipurpose passenger vehicles with a gross vehicle weight rating of 6,000 pounds or less, unless the Attorney General found that such a requirement would not substantially inhibit chop shop operations and motor vehicle thefts. The Attorney General did not make such a finding. Accordingly, in a final rule published in April 2004, NHTSA extended parts marking requirements to these vehicles. This document responds to petitions for reconsideration of the April 2004 final rule. Specifically, we are amending our procedures in order to begin processing parts marking exemption petitions prior to the effective date, and we are phasing-in the new requirements over a two-year period.

DATES: The amendments to Sections 541.3, 543.3, and 543.5, which were published at 69 FR 17960, April 6, 2004, as amended by 69 FR 31412, June 22, 2004, are hereby withdrawn. Except for the amendment to Section 543.3, this final rule is effective September 1, 2006. The amendment to Section 543.3 is effective July 18, 2005. Voluntary compliance is permitted before that time. If you wish to submit a petition for reconsideration of this rule, your petition must be received by July 5, 2005.

ADDRESSES: Petitions for reconsideration should refer to the docket number and be submitted to: Administrator, Room 5220, National Highway Traffic Safety Administration, 400 7th Street, SW., Washington, DC 20590.

FOR FURTHER INFORMATION CONTACT: For technical and policy issues, you may contact Mary Versailles, Office of International Policy, Fuel Economy and Consumer Programs, (Telephone: 202–366–2057) (Fax: 202–493–2290). *Mary.Versailles@nhtsa.dot.gov*.

For legal issues, you may contact George Feygin, Office of Chief Counsel (Telephone: 202–366–2992) (Fax: 202–366–3820). *George.Feygin@nhtsa.dot.gov*.

SUPPLEMENTARY INFORMATION:

Table of Contents

I. Summary of Decision
II. Background
III. Final Rule
IV. Petitions for Reconsideration
V. Response to Petitions
A. Clarification of Procedures for Selecting New Vehicle Lines Subject to the Theft Prevention Standard Before and After September 1, 2006
B. Procedures for Filing and Processing Exemptions Petitions for Vehicle Lines Not Subject to Parts Marking Requirements Until September 1, 2006
C. Petition to Exclude Low-volume Vehicle Lines
D. Petition to Temporarily Exclude Low Theft Vehicle Lines Equipped With Anti-theft Devices From the Requirements of the Standard
E. Petition to Delay the Effective Date or Adopt a Phase-in
F. Petition to Permit Parts Marking With Microdot Technology
G. Petition to Require Parts Marking of Glazing
H. Miscellaneous Issues
VI. Rulemaking Notices and Analyses
A. Executive Order 12866 and DOT Regulatory Policies and Procedures
B. Regulatory Flexibility Act
C. National Environmental Policy Act
D. Executive Order 13132 (Federalism)
E. Unfunded Mandates Act
F. Civil Justice Reform
G. Paperwork Reduction Act
H. Privacy Act
I. National Technology Transfer and Advancement Act
VII. Regulatory Text

I. Summary of Decision

After analyzing the petitions for reconsideration, this final rule makes the following changes and clarifications to NHTSA's expanded parts marking requirements:

- Manufacturers are not required to submit part 542 ''likely theft rate determinations'' for vehicle lines introduced prior to the September 1, 2006 effective date, if the manufacturers choose to voluntarily mark the new vehicle lines immediately after their introduction.
- Manufacturers are permitted to petition the agency to exempt low theft vehicle lines equipped with antitheft devices from the parts marking requirements 60 days after the publication of this document. Each manufacturer is eligible for one such exemption per model year, beginning with model year 2006.
- Vehicle lines with annual production of not more than 3,500 vehicles are excluded from parts marking requirements because the benefits of marking these vehicle lines would be of trivial or of no value. This exclusion applies to all vehicle manufacturers regardless of overall production volume.
- The agency is adopting a phase-in of the new parts marking requirements over a two-year period. Specifically, car lines representing not less than 50% of a manufacturer's production of vehicle lines that were not subject to parts marking requirements before September 1, 2006, must be marked effective September 1, 2006. The remaining vehicle lines must be marked effective September 1, 2007. Vehicle lines already subject to parts marking requirements are unaffected by this phase-in.

The agency is denying petitions to indefinitely exclude all low theft vehicle lines equipped with anti-theft devices from the requirements of the standard. We are also denying petitions to require glazing marking, and to allow parts marking using the microdot technology.

II. Background

49 CFR part 541, *Federal Motor Vehicle Theft Prevention Standard*, requires that major parts [1] of certain motor vehicle lines be indelibly marked with labels containing the Vehicle Identification Numbers (VINs).[2] This parts making requirement reduces the incidence of motor vehicle thefts by facilitating the tracing and recovery of parts from stolen vehicles, and prosecuting thieves, chop shop operators, and stolen part dealers.

The standard currently applies to high theft [3] passenger car lines; high theft multipurpose passenger vehicle (MPV) lines (*i.e.*, passenger vans and sport utility vehicles) with a gross vehicle weight rating (GVWR) of 6,000 pounds or less; and high theft light duty truck (LDT) lines (*i.e.*, pickup trucks and cargo vans) with a GVWR of 6,000 pounds or less. The standard also applies to passenger cars and MPVs that are not high theft, but have major parts that are interchangeable with major parts of high theft rate vehicle lines.[4] Finally, the standard applies to a small group of below median theft rate (low theft) passenger car and MPV lines that are not otherwise subject to parts marking requirements.[5]

Manufacturers are permitted to petition NHTSA for an exemption from the parts marking requirements for one vehicle line per model year. A vehicle line is eligible for an exemption if it is fitted with an antitheft device as standard equipment. The agency grants the exemption if it determines that the devices are likely to be as effective in reducing and deterring motor vehicle theft as compliance with the parts marking requirements.[6]

The Anti Car Theft Act of 1992 (the 1992 Theft Act) [7] required the Attorney General to conduct an initial review of effectiveness and make a finding requiring that the Secretary of Transportation expand the parts marking requirement to vehicle lines not subject to the current parts marking requirements (except LTDs), unless the Attorney General found instead that extending the requirement would not substantially inhibit chop shop operations and motor vehicle theft.[8] In effect, Congress created a rebuttable presumption, *i.e.*, parts marking should be expanded unless the Attorney General was able to make a finding against the effectiveness of parts marking. The Attorney General did not make such a finding, and instead concluded that the parts marking requirement should be expanded.[9] In accordance with the statutory mandate of the 1992 Theft Act, we published a final rule in April 2004 that extended parts marking requirements to the remaining vehicle lines. That document is described below.

III. Final Rule

On April 6, 2004, the agency published in the **Federal Register** (69 FR 17960) a final rule [10] extending the parts marking requirements to certain vehicle lines that were not previously subject to these requirements: (1) All low theft passenger car lines; (2) all low theft MPV lines with a gross vehicle weight rating (GVWR) of 6,000 pounds

[1] The list of major parts includes: engine, transmission, hood, fenders, side and rear doors (including sliding and cargo doors and decklids, tailgates, or hatchbacks, whichever is present), bumpers, quarter panels, and pickup boxes and/or cargo boxes. *See* 49 CFR 541.5.

[2] The labels cannot be removed without becoming torn or rendering the number on the label illegible. If removed, the label must leave a residue on the part so that investigators will have evidence that a label was originally present. Alteration of the number on the label must leave traces of the original number or otherwise visibly alter the appearance of the label material. A replacement major part must also be marked with the registered trademark of the manufacturer of the replacement part, or some other unique identifier, and the letter ''R''.

[3] ''High theft'' means a vehicle line that has or is likely to have a theft rate greater than the median theft rate for all new vehicles in the 2-year period covering calendar years 1990 and 1991. *See* 49 U.S.C. 33104(a)(1). ''Low theft'' means a vehicle line that has or is likely to have a sub-median theft rate.

[4] *See* 49 U.S.C. 33104(a)(1)(C).

[5] *See* appendix B to 49 CFR part 541.

[6] *See* 49 CFR part 543.

[7] *See* Public Law 102–519. October 25, 1992, codified in 49 U.S.C. chapter 331. *Theft Prevention*.

[8] *See* 49 U.S.C. 33103(c).

[9] Attorney General's Initial Review of Effectiveness is entitled ''The Initial Report.'' *See* Docket No. NHTSA–2002–12231–5.

[10] *See* Docket No. NHTSA–2002–12231–34.

or less; and (3) low theft LDT lines with a GVWR of 6,000 pounds or less that have major parts that are interchangeable with a majority of the covered major parts of passenger cars or MPVs described above.[11] The high theft vehicle lines that were previously exempted under 49 CFR part 543 on the grounds that they are equipped with a qualifying anti-theft device as standard equipment were unaffected by the April 2004 final rule. The agency also stated that it would continue to grant exemptions for one vehicle line per model year. The final rule is effective September 1, 2006.

IV. Petitions for Reconsideration

The agency received five petitions for reconsideration of the April 2004 final rule from the Alliance of Automobile Manufacturers (Alliance), DaimlerChrysler Corporation (DCX), DataDot Technology USA, Inc. (DataDot), Retainagroup, and Association of International Automobile Manufacturers (AIAM).[12] Further, the agency received several additional comments and requests for legal interpretation pertaining to the new parts marking requirements. We addressed some of these requests by issuing letters of interpretation, and promised to address other questions when we issued this document.

The following issues were raised in the petitions:

- Alliance petitioned the agency to immediately begin accepting and processing part 543 parts marking exemption petitions for vehicles that would become subject to parts marking requirements on September 1, 2006.
- Alliance petitioned the agency to clarify the procedures for selecting vehicles subject to the parts marking requirements before and after September 1, 2006.
- DCX and Alliance petitioned the agency to exclude low-volume vehicle lines from the requirements of the standard, regardless of the size of the vehicle manufacturer.
- Alliance petitioned the agency to extend the lead-time for one year, or in alternative, to implement a phase-in.
- DCX petitioned the agency to temporarily exclude low theft vehicle lines with standard equipment antitheft devices from the requirements of the standard.
- DataDot petitioned the agency to allow a more permanent method of marking vehicles using microdot technology.
- Retainagroup petitioned the agency to require parts marking of glazing.
- AIAM requested that NHTSA correct two typographical errors in the regulatory text of the April 2004 final rule where the agency incorrectly stated the effective date of the new requirements.[13]

The following issues were raised in letters and e-mails requesting legal interpretations and comments to the docket:

- Mr. Michael Finkelstein (on behalf of Mazda Motor Company) asked whether the agency would process petitions to exempt low theft vehicle lines from parts marking requirements prior to the September 1, 2006 effective date; and whether multiple exemption petitions before September 1, 2006 were permissible. This is, in part, the same issue raised by Alliance.
- Mr. James C. Chen of Hogan & Hartson asked for a clarification of two issues related to low theft rate LDT lines that will become subject to parts marking requirements because they have a majority of major parts that are interchangeable with major parts of passenger cars or MPVs subject to parts marking requirements.
- Mr. Steven Jonas of Volkswagen (VW) asked if the expanded parts marking requirements applied to passenger cars with a gross vehicle weight rating (GVWR) greater than 6,000 pounds. Mr. Jonas also asked about ''carryover'' of part 543 exemptions to subsequent model year vehicle lines.

V. Response to Petitions

A. Clarification of Procedures for Selecting New Vehicle Lines Subject to Parts Marking Requirements Before and After September 1, 2006

49 CFR 542.1 sets forth the procedures for determining whether a new vehicle line is likely to have a high theft rate and is therefore subject to current parts marking requirements.

First, manufacturers employ criteria in part 541 appendix C to evaluate new lines and determine whether the new line is likely to be high theft. Next, the manufacturers submit their conclusions (likely theft rate determination), along with underlying factual information, to NHTSA not less than 15 months prior to introduction of the new vehicle line in question. The agency then independently evaluates the new vehicle line (using the same criteria in part 541 appendix C) and informs the manufacturer by letter if the agency agrees with manufacturer's conclusions as to the likely theft rate of the new vehicle line.

Alliance petitioned the agency to clarify the procedures in § 542.1 as they apply to vehicle lines introduced before and after September 1, 2006. Specifically, Alliance asked whether a manufacturer must make the likely theft rate determination for vehicle lines being introduced several months prior to the September 1, 2006 effective date of the extended parts marking requirements. For example, Alliance asked if the manufacturers are required to evaluate the likely theft rate of a new line being introduced in June of 2006, knowing that this vehicle line would become subject to parts marking requirements regardless of the theft rate several months later. Alliance asked that the agency amend the standard so that likely theft rate determination submissions are not required for vehicle lines which will become subject to parts marking requirements shortly after their introduction.

We agree that in situations where a manufacturer introducing a new vehicle line before September 1, 2006 chooses to mark that vehicle line immediately, there is no reason to require the manufacturer to make the likely theft rate determination submission to NHTSA. We believe that the majority of manufacturers planning to introduce new vehicle lines shortly before the September 1, 2006 date would choose to mark their new vehicle lines immediately, rather than using their resources to submit the likely theft rate determination that, at best, would result in only temporary relief from the parts marking requirements. However, a manufacturer cannot sell unmarked vehicles before September 1, 2006, without having submitted the likely theft rate determination in accordance with 49 CFR 542.1. If the manufacturer introducing a new vehicle line before September 1, 2006 does not wish to voluntarily mark the subject vehicle line immediately, the manufacturer must submit the likely theft rate determination to NHTSA in accordance with 49 CFR 542.1.

Because after September 1, 2006, all passenger cars and MPVs will be subject to parts marking requirements, the likely theft rate determination submissions will be required for only LDTs with a GVWR of 6,000 pounds or less. This is because, with certain limitations, low theft LDT are not subject to parts marking requirements.

[11] Low theft rate LDTs which do not have major parts that are interchangeable with MPVs or passenger cars are not subject to parts marking requirements.

[12] These petitions are available online at *http://dms.dot.gov/search/searchFormSimple.cfm* (Docket No. NHTSA–2002–12231).

[13] A correction notice addressing this petition was published June 2, 2004 (*see* 69 FR 34612).

B. Procedures for Filing and Processing Part 543 Exemption Petitions for Existing Vehicle Lines Not Subject to Parts Marking Requirements Until September 1, 2006

Currently, 49 CFR 543.1 sets forth the procedures for filing and processing petitions to exempt high theft vehicle lines from the parts marking requirements. Manufacturers are allowed to petition NHTSA for one high theft vehicle line per model year. A vehicle line is eligible for an exemption if it is fitted with an antitheft device as standard equipment. The agency grants the exemption if it determines that the devices are likely to be as effective in reducing and deterring motor vehicle theft as compliance with the parts marking requirements.

Alliance and Michael Finkelstein petitioned the agency to amend the part 543 procedures in order to allow filing and processing exemptions for existing vehicle lines, equipped with qualifying antitheft devices, that will become subject to parts marking requirements on September 1, 2006, but are not subject to current parts marking requirements because they have been previously determined to be low theft. Specifically, petitioners asked the agency to amend the standard such that the vehicle manufacturer would be able to obtain part 543 exemptions for these vehicle lines prior to September 1, 2006.

Alliance argued that there is no statutory impediment to allowing manufacturers to file exemptions for vehicle lines that would not become subject to parts marking requirements until September 1, 2006. Further, Alliance argued that amending part 543 procedures is consistent with the purpose of the regulation because it encourages installation of antitheft devices on more vehicles.

NHTSA agrees with the petitioner's arguments and also notes that requiring the manufacturers to mark vehicles which the agency may soon thereafter decide are eligible for a part 543 exemption would result in an unnecessary financial burden upon the manufacturers. The costs associated with marking a vehicle line that was not previously subject to parts marking requirements are not insignificant. These costs would be especially high if marking was required for only a short period of time, because the agency would later agree to exempt that vehicle line. For example, there is potential for situations where a manufacturer would only have to mark a vehicle line for several weeks or months after September 1, 2006, while the agency reviewed its part 543 petition for exemption. A better solution is to review part 543 exemption petitions before the vehicle lines not classified as high theft, become subject to parts marking requirements.

Therefore, the agency is amending part 543 to allow vehicle manufacturers to file petitions to exempt vehicle lines (equipped with qualifying antitheft devices) that will become subject to parts marking requirements on September 1, 2006. Affected manufacturers may begin filing part 543 petitions 60 days after the publication of this final rule. The agency will begin processing these petitions immediately thereafter.

We note that, as discussed above, each manufacturer is eligible for one part 543 exemption per model year.[14] For vehicle lines not subject to current requirements, exemptions will be granted beginning with 2006 model year. That is, while part 543 petitions will be accepted and considered by the agency 60 days after the publication of this document, the manufacturers of existing low theft vehicle lines would be able to obtain only one exemption per model year, beginning with model year 2006 vehicles.

In his e-mail, Michael Finkelstein asked whether a manufacturer of multiple low theft vehicle lines could apply for more than one part 543 exemption before the September 1, 2006 effective date.[15] Specifically, Michael Finkelstein asked if a manufacturer could obtain an exemption for a 2005 model year low theft vehicle line. Our answer is no.

We would not consider it appropriate to grant exemptions for low theft 2005 model year vehicle lines because these vehicle lines are not subject to parts marking requirements; *i.e.*, model year 2005 vehicles will not be in production on September 1, 2006. Thus, a 2005 model year low theft vehicle line is not eligible for a part 543 exemption.

Because the new parts marking requirements become effective September 1, 2006, we anticipate that at least some 2006 model year vehicle lines will still be in production at that time. Accordingly, we believe it is appropriate to consider part 543 exemptions for low theft vehicle lines beginning with 2006 model year.

In sum, the agency will begin accepting and processing part 543 petitions for exemption of vehicle lines not subject to current parts marking requirements 60 days after the publication of this document. Each manufacturer of such vehicle lines is eligible for one exemption per model year, beginning with model year 2006.

We note that vehicle manufacturers can continue to petition the agency to exempt high theft vehicle lines subject to current parts marking requirements. That is, high theft 2005 model year vehicle lines are eligible for a part 543 exemption if they are equipped with a qualifying antitheft device.[16] As previously stated, beginning with 2006 model year, each manufacturer is eligible for one exemption per model year, regardless of theft rate.

C. Petition to Exclude Low-volume Vehicle Lines

The April 2004 final rule excluded manufacturers that sell fewer than 5,000 vehicles in the U.S. each year from the requirements of the standard. DCX and Alliance petitioned the agency to similarly exclude (in addition to small volume manufacturers described above) low-volume vehicle lines whose annual sales do not exceed 3,500. This exclusion would apply to low-volume vehicle lines produced by larger manufacturers. Examples of these low-volume vehicle lines include Dodge Viper, Maybach, Mercedes SLR, and Ford GT.

Alliance argued that like the smaller manufacturers already exempted by the April 2004 final rule, the larger manufacturers also produce low-volume specialty vehicle lines that have low theft rates and high costs of parts marking because the vehicles are not manufactured on traditional assembly lines. Alliance noted that there is virtually no black market demand or chop shop interest in stolen parts from these vehicles. Further, the costs of marking low-volume vehicle lines are potentially as expensive as they are for small vehicle manufacturers exempted from the requirements.

In support of the Alliance petition, DCX offered Dodge Viper as an example of a low-volume vehicle line produced by a large volume manufacturer. The Viper has a unique engine, chassis, and body panels that are not shared with other vehicles produced by DCX.[17] Much like the manufacturers exempt from parts making, DCX assembles each Viper individually at a dedicated facility. DCX argued that implementing parts marking for a low volume vehicle line such as the Viper is equally as

[14] *See* § 543.5(a).

[15] *See* Docket No. NHTSA–2002–12231–41.

[16] ''Qualifying'' means NHTSA determined that the device is likely to be as effective in reducing and deterring motor vehicle theft as compliance with the parts marking requirements.

[17] The Viper V10 powertrain is actually also used in a Dodge Ram SRT 10 pickup tuck, but that vehicle is also produced in very limited quantities (*http://www.dodge.com/srt–10/index.html*).

burdensome for DCX as it is for the exempted manufacturers.

Alliance argued that NHTSA's theft data indicate that the theft rate of low-volume vehicle lines is lower than it is for other vehicles. DCX stated that between 1997 and 2002, 8,194 Dodge Vipers have been produced, and in that time period, there have been only six reported thefts.

NHTSA agrees with the petitioners that the practical burdens of marking low-volume vehicle lines are significant for both small manufacturers and large manufacturers. This is because the fixed costs associated with implementing parts marking of low-volume vehicle lines are unique to those lines, since they are usually built in dedicated facilities and do not share assembly lines with other vehicles produced by larger manufacturers. As indicated by the Alliance, the fixed costs include finding a suitable supplier, investment in parts marking equipment, and process implementation for manufacturers who may have had no previous parts marking experience.

In addition to these financial burdens, NHTSA notes that parts marking of low-volume vehicle lines is unlikely to reduce the incidence of motor vehicle thefts, facilitate recovery of stolen vehicle parts, or facilitate prosecution of chop shop operators because the vehicles that are manufactured in small quantities are generally not stolen for parts, the primary type of theft this standard is meant to address. In most instances, the vehicles in question are expensive and exotic cars. There is typically no market for stolen parts for such vehicles. Accordingly, it is unlikely that these vehicles would wind up in chop shops, even if they were stolen.

We further note that parts marking of low-volume vehicle lines would have the potential to affect only a very small number of vehicle thefts. We estimate that there are 67 yearly thefts of vehicles produced in quantities of not more than 3,500. We note that some of the vehicles in that category are produced by small volume manufacturers already exempted from parts marking requirements. Thus, parts marking of low-volume vehicle lines would, at most, have the potential of affecting fewer than less than 67 motor vehicle thefts per year.

In sum, NHTSA has decided that the benefits of marking these vehicles would be of trivial or of no value. Accordingly, the agency is exempting vehicle lines with 3,500 vehicles or less annually from the requirements.

We note that case law indicates that in some situations, agencies have an implied authority to create exclusions based on *de minimis* circumstances.[18] *De minimis* circumstances refer to situations where following the plain meaning of a statute would lead to ''a gain of trivial or no value.'' That is, the agency may go beyond the plain meaning of the statute in order to avoid a pointless expenditure of effort by regulated parties. Based on theft information available to NHTSA, we believe that this is one of these situations. That is, parts marking of low-volume vehicle lines would produce theft reduction gains of trivial or no value.

D. Petition to Temporarily Exclude Low Theft Vehicle Lines Equipped With Anti-Theft Devices From the Requirements of the Standard

DCX petitioned the agency to exclude low theft vehicle lines equipped with anti-theft devices (as standard equipment) from the parts marking requirements until each such vehicle line is discontinued or undergoes a major redesign. Essentially, DCX argues that low theft vehicle lines that are equipped with anti-theft devices should be afforded the same treatment as high-theft vehicle lines that have been granted exemptions under part 543 [19] because NHTSA determined that their antitheft devices are likely to be as effective in reducing and deterring motor vehicle theft as compliance with the parts marking requirements. DCX explains that this approach would in effect phase-in the new parts marking requirements, allowing the manufacturers to gradually expand parts marking to all affected vehicle lines.

DCX argues that this approach maintains equity in application of parts marking requirements, and would discourage manufacturers of low theft vehicle lines from removing effective antitheft devices from their vehicles. DCX explains that it voluntarily installed antitheft devices in its vehicle lines, and will now also have to mark the same vehicle lines. By contrast, manufacturers of high theft vehicle lines equipped with antitheft devices have in the past been able to obtain part 543 exemptions from parts marking requirements. DCX argues that without continued exclusion of low theft vehicle lines equipped with antitheft devices, manufacturers of low theft vehicles might determine that the cost of parts marking and standard anti-theft devices is too prohibitive. DCX states that the statutory language is broad enough to permit the agency to adopt this approach. We disagree for several reasons.

DCX argues that the Theft Prevention statute says nothing that prevents or prohibits phasing-in the extension and does not specify any particular method by which the agency should implement the extension of parts marking requirements. By way of analogy and precedent, DCX also noted that although the Vehicle Safety Act does not expressly allow phase-ins, the agency has previously interpreted that Act to allow them for safety standards.

While we believe that the relevant language in the Theft Prevention statute is broad enough to permit a fleet-wide phase-in to address practicability issues, the agency believes that it is otherwise limited in how it could implement the new requirements.

First, 49 U.S.C. 33103(b) directed the agency to extend the parts marking requirements to vehicle lines that are not subject to the current parts marking requirements. While the statute explicitly excluded low theft LDTs, it made no similar exclusions for low theft vehicle lines equipped with antitheft devices, or any other classes of vehicles. The agency believes that if Congress had intended to exclude low theft vehicle lines equipped with antitheft devices from the parts marking requirements, it would have explicitly directed NHTSA to exempt such vehicles, as it did with LDTs. Accordingly, we conclude that Congress intended to extend parts marking requirements to low theft vehicle lines whether or not they are equipped with antitheft devices. This is contrary to the petitioner's suggestion that the agency could indefinitely exclude low theft vehicle lines equipped with antitheft devices from the requirements of the standard.

Second, we note that 49 U.S.C. 33106(b) allows NHTSA to exempt one vehicle line per year, if the manufacturer installs an antitheft device as standard equipment, and NHTSA determines that the antitheft device is likely to be as effective in reducing and deterring motor vehicle theft as compliance with the part-marking requirements. We believe that because Congress retained our exemption authority in adopting the 1992 amendments and narrowly limited the number of new exemptions, Congress did not deem antitheft devices to be functionally equivalent per se to parts marking, and did not intend the agency to provide an automatic, across-the-board exclusion to low theft vehicle

[18] *Alabama Power Co.* v. *Costle,* 636 F.2d 323 at 360, 361 (DC Cir. 1980); *see also Public Citizen* v. *Young,* 831 F.2d 1108 at 1112 (DC Cir. 1987); *Environmental Def. Fund* v. *Environmental Protection Agency,* 82 F.3d 451, 466 (DC Cir.1996).

[19] Please see Section II, which discusses current exemption procedures.

lines equipped with antitheft devices from the parts marking requirements. We believe that the narrow exemption provision is instructive because Congress could have substantially broadened that provision and directed NHTSA to begin immediately to exempt multiple low theft vehicle lines equipped with antitheft devices.

Further, the agency has not had the opportunity to examine the effectiveness of antitheft devices installed on low theft vehicles. Even if, as suggested by DCX, the agency would be provided with a list of every low theft vehicle line equipped with an antitheft device, exempting all such vehicle lines would breach the statutory limit of one exemption per model year. We note also that there are practical limitations to the agency's ability to compare and examine antitheft devices and theft rates of all vehicle lines that will become subject to parts marking on September 1, 2006.

While we cannot indefinitely exclude low theft vehicle lines equipped with antitheft devices by phasing in the new requirements, we can adopt a fleet-wide phase-in that follows a definite, fixed schedule.

In considering what phase-in to adopt, the agency balanced the benefits of parts marking against the practical burdens associated with implementing parts marking for manufacturers that have not previously been required to mark any of their vehicle lines. In assessing the benefits, we are mindful of the presence of antitheft devices on some of the vehicle lines, although we would assess their effectiveness only in the context of a petition for exemption. As previously discussed, the burdens include the fixed costs of finding a suitable supplier, investment in parts marking equipment, and process implementation for manufacturers that have no previous parts marking experience. Thus, we want to implement the new requirements in a time frame that eliminates any basis for practicability concerns.[20] To address this concern, we have decided to adopt a short (two-year) fleet-wide phase-in for the new parts marking requirements. This approach is described in the next section.

E. Petition To Delay the Effective Date or Adopt a Phase-In

DCX and Alliance petitioned the agency to delay the effective date or implement a limited phase-in, so that only 70% of each manufacturer's production would have to be marked by September 1, 2006, with the remaining 30% marked by September 1, 2007. While we decline to delay the effective date, for the reasons discussed in the previous section, the agency believes that a phase-in is warranted.

NHTSA estimates that at least five manufacturers have multiple low theft vehicle lines affected by parts marking expansion. Because the second largest vehicle line for at least one of these manufacturers exceeds 30% of the total low theft vehicle production, the 70/100 phase-in suggested by the Alliance and DCX is inappropriate because at least one manufacturer would still be required to mark both low theft vehicle lines. Instead, we are adopting a 50/50 phase-in.

NHTSA cannot adopt a phase-in based solely on a percentage of the total vehicle production because this could result in manufacturers having to mark some, but not all vehicles in the same vehicle line. This, of course, would frustrate the purpose of parts marking because law enforcement personnel would be unable to ascertain whether the vehicle or vehicle part should have been marked. Accordingly, we are adopting a phase-in under which car lines representing not less than 50% of a manufacturer's vehicle lines that were not subject to parts marking requirements before September 1, 2006, must be marked not later than September 1, 2006. The remaining vehicle lines must be marked not later than September 1, 2007. Vehicle lines already subject to parts marking requirements are unaffected by this phase-in.

We note that, in addition to the phase-in, we assume that each manufacturer affected by this final rule will be able to obtain a part 543 exemption from the parts marking requirement for the largest vehicle line equipped with a qualifying anti-theft device. The agency believes that together, the phase-in and the exemption opportunity will substantially lessen the burdens and allow the manufacturers sufficient flexibility in implementing the new parts marking requirements.

F. Request To Permit Parts Marking With Microdot Technology

DataDot petitioned the agency to allow microdot marking of vehicles that are subject to parts marking requirements.[21] Microdot technology enables vehicle manufacturers to spray microdots on different vehicle components. Each microdot is encoded with the VIN specific to that vehicle. Microdots are nearly invisible to the naked eye, but can be easily be found and identified with simple magnification.[22] Each vehicle is sprayed with approximately 10,000 microdots.

Microdot technology does not comply with current parts marking size and style requirements because the current standard mandates that the major vehicle parts listed in § 541.5 are marked with the VIN of that vehicle lettered in block capitals and numerals not less than three thirty-seconds of an inch in height. DataDot petitioned the agency to allow the use of microdot technology as an alternative to traditional parts marking.

The agency is unable to consider DataDot's request because a change to parts marking size and style requirements would be outside the scope of the Notice of Proposed Rulemaking (NPRM).[23] That is, when the agency proposed to expand parts marking requirements in June of 2002, it did not propose to change the parts marking size and style. Therefore, NHTSA cannot change these requirements without first issuing a notice requesting public comment on that specific issue.

In addition, the agency would need to examine certain issues related to microdot marking. These issues include acceptance of microdot technology within the law enforcement community; the costs associated with magnifying devices used to read microdot markings; potential need for additional law enforcement personnel training; and the need for objective criteria to regulate microdot markings.

In sum, the agency is unable to amend part 541 to allow microdot technology as an alternative to conventional parts marking because such change would be outside the scope of notice. We note that voluntary use of microdot technology on vehicles not subject to parts marking requirements, or in addition to the required markings, is not prohibited by our standards.

G. Parts Marking of Glazing

Retainagroup petitioned the agency to add glazing to the list of major parts in § 541.5 that are required to be marked on vehicles subject to parts marking requirements.[24] Retainagroup argued that marking the vehicle glazing would considerably enhance the deterrence effect of our regulations. Retainagroup stated that the chief benefit of glazing

[20] We note that this analysis is limited to issues arising out of the Theft Prevention statute, and the agency would take a different approach to the issues related to practicability in the context of the Safety Act.

[21] *See* Docket No. NHTSA–2002–42, 44, 46, 47.

[22] For more information on DataDot technology see *http://www.mdatatech.com/about.htm.*

[23] *See* 67 FR 43075 (June 26, 2002).

[24] *See* Docket No. NHTSA–2002–12231–40.

marks would be deterrence of vehicle theft, rather than prevention of glazing theft.

As discussed in our April 2004 final rule, the agency does not have the statutory authority to require marking of glazing. Under 49 U.S.C. 33101(6), major parts of motor vehicle subject to parts making requirements only include: (A) The engine; (B) the transmission; (C) each passenger compartment door; (D) the hood; (E) the grille; (F) each bumper; (G) each front fender; (H) the deck lid, tailgate, hatchback; (I) each rear quarter panel; (J) trunk floor pan; (K) the frame or platform; and (L) any other part comparable in design or function to the parts listed in A through K.

Glazing is not listed in A through K, and the agency believes that it is not comparable in design and function to parts listed above. As discussed in our April 14, 2004 letter to Retainagroup,[25] glazing is designed and manufactured from a combination of glass and plastic, materials that are significantly different from metal and fiberglass normally used in manufacturing the ''major parts'' listed in § 541.5. Glazing also serves a unique function of providing visibility necessary for the safe operation of motor vehicles and helps prevent ejections in automobile collisions. This function is unique to glazing and is different from that of vehicle parts listed in A through K. Accordingly, before the agency could require parts marking of glazing, Congress would have to amend 49 CFR Chapter 331, the statute governing theft prevention.

Finally, Retainagroup made several general arguments in favor of laser-etching the major parts that are subject to marking requirements, instead of affixing labels. We note that laser etching is not prohibited by our standards so long as the VIN number is lettered in block capitals and numerals not less than three thirty-seconds of an inch high. We further note that glazing marking is not prohibited by our regulations and vehicle manufacturers are free to do so.

H. Miscellaneous Issues

1. In a letter dated April 13, 2004, VW asked whether expanded parts marking requirements applied to passenger cars with a gross vehicle weight rating (GVWR) greater than 6,000 pounds. In a letter dated May 10, 2004, we explained that the GVWR limitation applied only to multipurpose passenger vehicles and light duty trucks, and that the new parts marking requirements apply to all passenger cars regardless of GVWR.[26] Subsequently, we published a correction notice, which, among other things, clarified the application of parts marking requirements.[27]

2. In an e-mail dated February 7, 2005, Mr. Steven Jonas of VW asked about ''carryover'' of part 543 exemptions to subsequent model year vehicle lines. Specifically, Mr. Jonas asked if a part 543 parts marking exemption of a 2006 model year line would carry over to a 2007 model year line, if the 2007 model year line is introduced before September 1, 2006. Our answer is yes.

If the agency grants a part 543 exemption for a 2006 model year line, that exemption carries over to subsequent model years regardless of the model introduction date. We note that, as discussed in Section V(B) above, each manufacturer is eligible for one part 543 parts marking exemption per model year. Thus, VW would not be able to obtain another exemption for a different 2006 model year line.

3. In an e-mail dated October 27, 2004, James Chen of Hogan & Hartson asked if a low theft LDT line that shares majority of interchangeable parts with a vehicle line that is exempted from parts marking under part 543, would itself be subject to parts marking requirements. Our answer is no.

By way of background, The Anti Car Theft Act of 1992 required NHTSA to extend the parts marking requirements to below median theft rate passenger cars and multipurpose passenger vehicles with a gross vehicle weight rating of 6,000 pounds or less. However, the statute did not direct NHTSA to extend the parts marking requirements to low theft LDTs. Nevertheless, as explained, in the April 2004 final rule, the agency decided to extend parts marking requirements to low theft LDTs that share major interchangeable parts with vehicles that would become subject to parts marking effective September 1, 2006. Failure to apply the parts marking requirements to these low theft LDTs could hinder law enforcement actions because it would have been difficult or even impossible to draw, with any confidence, inferences from the absence of marks on shared major vehicle parts.

The situation described by Mr. Chen does not raise the same concerns. If the vehicle line subject to parts marking is exempted under part 543, there is no risk of confusion associated with only some but not all of identical vehicle parts being marked. Thus, we believe it is unnecessary to require that low theft LDTs that share major interchangeable parts with exempted vehicle lines, be marked. In fact, we believe that requiring LDTs to be marked when their ''counterparts'' are exempted, could also hinder effective law enforcement.

We are amending the regulatory text accordingly.

4. In an e-mail dated October 28, 2004, James Chen of Hogan & Hartson asked when the manufacturers of LDTs are required to submit their likely theft rate determinations based on criteria specified in appendix C of part 541.

New LDT lines: The manufacturers of all LDTs, are required to submit their likely theft rate determinations 15 months prior to introduction of each new line. This requirement is unaffected by the April 2004 final rule, since the manufacturers were previously required to submit this information 15 months prior to introduction of new vehicle lines.[28] Accordingly, the manufacturers of new LDT lines should continue submitting their likely theft rate determinations as they did before the April 2004 final rule.

Existing LDT lines: Under the April 2004 final rule, the manufacturers of existing low theft LDTs lines are required to submit their evaluations and conclusions regarding low theft LDTs that share major parts with vehicles subject to parts marking requirements.[29] The manufacturers are required to submit this information 15 months prior to the date when the vehicles sharing major parts would become subject to parts marking requirements. Thus, the agency expects to receive these evaluations 15 months prior to September 1, 2006.[30]

VI. Rulemaking Analyses and Notices

A. Executive Order 12866 and DOT Regulatory Policies and Procedures

This rulemaking document was not reviewed under E.O. 12866, ''Regulatory Planning and Review.'' The agency has considered the impact of this rulemaking action under the Department of Transportation's

[25] *http://www.nhtsa.dot.gov/cars/rules/interps/files/GF001563a.html.*

[26] *http://www.nhtsa.dot.gov/cars/rules/interps/files/GF003175.html.*

[27] *See* 69 FR 34612 (June 22, 2004).

[28] As explained in Section V, likely theft rate determination submissions are not required for passenger car and MPV lines because they will become subject to parts marking regardless of theft rate. Further, likely theft rate determinations are not required if these vehicle lines are voluntarily marked prior to the September 1, 2006 effective date.

[29] *See* 49 CFR 542(c)(3).

[30] We note that, traditionally, the agency evaluates late submissions. Because of timing concerns, we will again evaluate § 542(c)(3) submissions made after June 1, 2005, so long as the required submission is made without unreasonable delay.

regulatory policies and procedures, and has determined that it is not ''significant.''

In the Final Regulatory Evaluation (FRA), we estimated that expanding parts marking requirements would cost $19.6 million annually.[31] Because we are implementing a phase-in, and because we decided to exclude low-volume vehicle lines from parts marking requirements, this document reduces our estimated yearly costs.

The agency estimates that expanded parts marking requirements would reduce the costs associated with vehicle thefts by $38.8 million each year. Because low-volume vehicle lines are seldom stolen, this document will not substantially affect our benefits estimates.

B. Regulatory Flexibility Act

The Regulatory Flexibility Act of 1980 (5 U.S.C. 601 *et seq.*) requires agencies to evaluate the potential effects of their rules on small businesses, small organizations and small governmental jurisdictions. I have considered the possible effects of this rulemaking action under the Regulatory Flexibility Act and certify that it would not have a significant economic impact on a substantial number of small entities because NHTSA has previously excluded small manufacturers (less than 5,000 vehicles annually) from parts marking requirements.

C. National Environmental Policy Act

NHTSA has analyzed this document for the purposes of the National Environmental Policy Act. The agency has determined that implementation of this action would not have any significant impact on the quality of the human environment.

D. Executive Order 13132 (Federalism)

NHTSA has analyzed this rulemaking in accordance with the principles and criteria contained in Executive Order 13132 (64 FR 43255, August 10, 1999) and have determined that it does not have sufficient Federal implications to warrant consultation with State and local officials or the preparation of a Federalism summary impact statement. The final rule will not have any substantial impact on the States, or on the current Federal-State relationship, or on the current distribution of power and responsibilities among the various local officials.

E. Unfunded Mandates Act

The Unfunded Mandates Reform Act of 1995 requires agencies to prepare a written assessment of the costs, benefits and other effects of proposed or final rules that include a Federal mandate likely to result in the expenditure by State, local or tribal governments, in the aggregate, or by the private sector, of more than $100 million annually ($120.7 million as adjusted annually for inflation with base year of 1995). The assessment may be included in conjunction with other assessments, as it is here.

This final rule will not result in expenditures by State, local, or tribal governments or automobile or automobile parts manufacturers of more than $120.7 million annually.

F. Civil Justice Reform

Pursuant to Executive Order 12988, ''Civil Justice Reform'' (61 FR 4729, February 7, 1996), the agency has considered whether this rulemaking would have any retroactive effect. This final rule does not have any retroactive effect. A petition for reconsideration or other administrative proceeding will not be a prerequisite to an action seeking judicial review of this rule. This final rule would not preempt the states from adopting laws or regulations on the same subject, except that it would preempt a state regulation that is in actual conflict with the Federal regulation or makes compliance with the Federal regulation impossible or interferes with the implementation of the Federal statute.

G. Paperwork Reduction Act

Under the Paperwork Reduction Act of 1995 (PRA), a person is not required to respond to a collection of information by a Federal agency unless the collection displays a valid OMB control number. The report required to verify compliance with the phase-in adopted in this final rule is considered a new ''collection of information'' as that term is defined by OMB in 5 CFR part 1320.

Under the Paperwork Reduction Act of 1995, before an agency submits a proposed collection of information to OMB for approval, it must first publish a document in the **Federal Register** providing a 60-day comment period and otherwise consult with members of the public and affected agencies concerning each proposed collection of information. The OMB has promulgated regulations describing what must be included in such a document. Under OMB's regulation (at 5 CFR 1320.8(d), an agency must ask for public comment on the following:

(i) Whether the proposed collection of information is necessary for the proper performance of the functions of the agency, including whether the information will have practical utility;

(ii) The accuracy of the agency's estimate of the burden of the proposed collection of information, including the validity of the methodology and assumptions used;

(iii) How to enhance the quality, utility, and clarity of the information to be collected;

(iv) How to minimize the burden of the collection of information on those who are to respond, including the use of appropriate automated, electronic, mechanical, or other technological collection techniques or other forms of information technology, *e.g.* permitting electronic submission of responses.

In compliance with these requirements, NHTSA asks for public comments on the following proposed collection of information for which the agency is seeking approval from OMB. Comments must be received on or before July 18, 2005.

Title: 49 CFR 545—Federal Motor Vehicle Theft Prevention Standard Phase-In Reporting Requirements.

OMB Control Number: None.

Form Number: None.

Affected Public: Vehicle manufacturers.

Requested Expiration Date of Approval: Three years from approval date.

Abstract: In response to petitions for reconsideration of an April 6, 2004 final rule (69 FR 17960), NHTSA is amending the final rule to phase-in the effective date of new parts marking requirements over a two-year period. To ensure compliance with this phase-in, NHTSA will be requesting approval from OMB to require the submission of a single report within 60 days of August 31, 2007 indicating what vehicle lines were marked effective September 1, 2006.

NHTSA estimates that not more than 21 vehicle manufacturers will be affected by these reporting requirements. None of the affected manufacturers are small businesses because manufacturers producing fewer than 5,000 vehicles per year are excluded from parts marking requirements. NHTSA estimates that the vehicle manufacturers will incur a total annual reporting and cost burden of 42 hours (2 hours × 21 manufacturers) and $630 to $840.

For Further Information Contact: Mary Versailles, Office of International Policy, Fuel Economy and Consumer Programs, (Telephone: 202–366–2057) (Fax: 202–493–2290). 400 7th Street, SW., Room 5320, Washington, DC 20590.

[31] *See* Docket No. 2002–12231–35.

H. Privacy Act

Anyone is able to search the electronic form of all comments received into any of our dockets by the name of the individual submitting the comment (or signing the comment, if submitted on behalf of an association, business, labor union, etc.). You may review DOT's complete Privacy Act Statement in the **Federal Register** published on April 11, 2000 (Volume 65, Number 70; Pages 19477–78) or you may visit *http://dms.dot.gov*.

I. National Technology Transfer and Advancement Act

Under the National Technology and Transfer and Advancement Act of 1995 (NTTAA) (Pub. L. 104–113, 15 U.S.C. 272), ''all Federal agencies and departments shall use technical standards that are developed or adopted by voluntary consensus standards bodies, using such technical standards as a means to carry out policy objectives or activities determined by the agencies and departments.''

We are unaware of any applicable technical standards related to parts marking.

K. Regulation Identifier Number (RIN)

The Department of Transportation assigns a regulation identifier number (RIN) to each regulatory action listed in the Unified Agenda of Federal Regulations. The Regulatory Information Service Center publishes the Unified Agenda in April and October of each year. You may use the RIN contained in the heading at the beginning of this document to find this action in the Unified Agenda.

L. Executive Order 13045 (Protection of Children)

Executive Order 13045, ''Protection of Children from Environmental Health and Safety Risks'' (62 FR 19855, April 23, 1997), applies to any rule that: (1) Is determined to be ''economically significant'' as defined under Executive Order 12866, and (2) concerns an environmental, health, or safety risk that the agency has reason to believe may have a disproportionate effect on children. This rule is not subject to E.O. 13045 because it is not ''economically significant'' as defined under E.O. 12866, and does not concern an environmental, health or safety risk that NHTSA has reason to believe may have a disproportionate effect on children.

List of Subjects in 49 CFR Parts 541, 543, and 545

Administrative practice and procedure, Crime, Labeling, Motor vehicles, Reporting and recordkeeping requirements.

The amendments to Sections 541.3, 543.3, and 543.5, which were published at 69 FR 17960, April 6, 2004, as amended by 69 FR 31412, June 22, 2004, are hereby withdrawn.

■ In consideration of the foregoing, NHTSA amends 49 CFR chapter V as follows:

VII. Regulatory Text

PART 541—FEDERAL MOTOR VEHICLE THEFT PREVENTION STANDARD

■ 1. The authority citation for part 541 continues to read as follows:

Authority: 49 U.S.C. 322, 33101, 33102, 33103, 33104, 33105; delegation of authority at 49 CFR 1.50.

■ 2. Section 541.3 is revised to read as follows:

§ 541.3 Application.

(a) Except as provided in paragraph (b) and (c) of this section, this standard applies to the following:

(1) Passenger motor vehicle parts identified in § 541.5(a) that are present in:

(i) Passenger cars; and

(ii) Multipurpose passenger vehicles with a gross vehicle weight rating of 6,000 pounds or less; and

(iii) Light-duty trucks with a gross vehicle weight rating of 6,000 pounds or less, that NHTSA has determined to be high theft in accordance with 49 CFR 542.1; and

(iv) Light duty trucks with a gross vehicle weight rating of 6,000 pounds or less, that NHTSA has determined to be subject to the requirements of this section in accordance with 49 CFR 542.2.

(2) Replacement passenger motor vehicle parts identified in § 541.5(a) for vehicles listed in paragraphs (1)(i) to (iv) of this section.

(b) *Exclusions.* This standard does not apply to the following:

(1) Passenger motor vehicle parts identified in § 541.5(a) that are present in vehicles manufactured by a motor vehicle manufacturer that manufactures fewer than 5,000 vehicles for sale in the United States each year.

(2) Passenger motor vehicle parts identified in § 541.5(a) that are present in a line with an annual production of not more than 3,500 vehicles.

(3) Passenger motor vehicle parts identified in § 541.5(a) that are present in light-duty trucks with a gross vehicle weight rating of 6,000 pounds or less, that NHTSA has determined to be subject to the requirements of this section in accordance with 49 CFR 542.2, if the vehicle line with which these light-duty trucks share majority of major interchangeable parts is exempt from parts marking requirements pursuant to part 543.

(c) For vehicles listed in subparagraphs (1)(i) to (iv) of this section that are (1) not subject to the requirements of this standard until September 1, 2006, and (2) manufactured between September 1, 2006 and August 31, 2007; a manufacturer needs to meet the requirements of this part only for lines representing at least 50% of a manufacturer's total production of these vehicles.

PART 543—[AMENDED]

■ 3. The authority citation for part 543 continues to read as follows:

Authority: 49 U.S.C. 322, 33101, 33102, 33103, 33104, 33105; delegation of authority at 49 CFR 1.50.

■ 4. Section 543.3 is amended to read as follows:

§ 543.3 Application.

This part applies to manufacturers of vehicles subject to the requirements of part 541 of this chapter, and to any interested person who seeks to have NHTSA terminate an exemption.

■ 5. Section 543.5(a) is amended to read as follows:

§ 543.5 Petition: General requirements.

(a) For each model year, a manufacturer may petition NHTSA for an exemption of one car line from the requirements of part 541 of this chapter. However, for car lines not subject to the requirements of part 541 of this chapter until September 1, 2006, a manufacturer may not petition NHTSA for an exemption for model years before model year 2006.

* * * * *

■ 6. Part 545 is added to read as follows:

PART 545—FEDERAL MOTOR VEHICLE THEFT PREVENTION STANDARD PHASE-IN AND SMALL-VOLUME LINE REPORTING REQUIREMENTS

Authority: 49 U.S.C. 322, 33101, 33102, 33103, 33104, 33105; delegation of authority at 49 CFR 1.50.

Sec.

545.1 Scope
545.2 Purpose
545.3 Applicability
545.4 Response to inquiries
545.5 Definitions
545.6 Reporting requirements for vehicles listed in § 541(a)(1)

545.7 Reporting requirements for vehicles listed in § 541(b)(2)
545.8 Records
545.9 Petition to extend period to file report

§ 545.1 Scope.

This part establishes requirements for manufacturers of motor vehicles to respond to NHTSA inquiries, to submit reports, and to maintain records related to the reports, concerning the number of vehicles that meet the requirements of 49 CFR part 541, and the number of vehicles that are excluded from the requirements of 49 CFR part 541 pursuant to 49 CFR 541(b)(2).

§ 545.2 Purpose.

The purpose of these requirements is to assist the National Highway Traffic Safety Administration in determining whether a manufacturer has complied with the requirements of 49 CFR 541.5.

§ 545.3 Applicability.

This subpart applies to manufacturers of motor vehicles.

§ 545.4 Response to inquiries.

At any time prior to August 31, 2007, each manufacturer must, upon request from the Office of Vehicle Safety Compliance, provide information identifying the vehicles (by make, model, and vehicle identification number) that have been certified as complying with the requirements of 49 CFR part 541. The manufacturers designation of a vehicle as a certified vehicle is irrevocable.

At any time prior to August 31, 2007, each manufacturer must, upon request from the Office of Vehicle Safety Compliance, provide information identifying the vehicles (by make, model, and vehicle identification number) that are excluded from the requirements of 49 CFR part 541 pursuant to 49 CFR 541(b)(2).

§ 545.5 Definitions.

Production year means the 12-month period between September 1 of 2006 and August 31, 2007, inclusive.

Small-volume line means a line with an annual production of not more than 3,500 vehicles.

§ 545.6 Reporting requirements for vehicles listed in § 541(a)(1).

(a) *General reporting requirements.* Within 60 days after the end of the production year ending August 31, 2007, each manufacturer shall submit a report to the National Highway Traffic Safety Administration concerning its compliance with 49 CFR part 541 for vehicles listed in § 541(a)(1) that were manufactured between September 1, 2006 and August 31, 2007. Each report must—

(1) Identify the manufacturer;

(2) State the full name, title, and address of the official responsible for preparing the report;

(3) Identify the production year being reported on;

(4) Contain a statement regarding whether or not the manufacturer complied with the requirements of 49 CFR part 541 for the period covered by the report, and the basis for that statement;

(5) Provide the information specified in paragraph (b) of this section;

(6) Be written in the English language; and

(7) Be submitted to: Administrator, National Highway Traffic Safety Administration, Room, 400 7th Street, SW., Washington, DC 20590.

(b) *Report content*—(1) *Basis for Statement of Compliance.* Each manufacturer shall provide the number of motor vehicles listed in § 541(a)(1) that were manufactured between September 1, 2006 and August 31, 2007 (excluding those motor vehicles that were subject to the requirements of 49 CFR part 541 before September 1, 2006).

(2) *Production.* Each manufacturer shall provide (1) the number of motor vehicles manufactured between September 1, 2006 and August 31, 2007 (excluding those motor vehicles that were subject to the requirements of 49 CFR part 541 before September 1, 2006), that meet the requirements of 49 CFR 541.5; and (2) the number of motor vehicles manufactured between September 1, 2006 and August 31, 2007 (excluding those motor vehicles that were subject to the requirements of 49 CFR part 541 before September 1, 2006), that are exempt from 49 CFR part 541 pursuant to 49 CFR part 543.

(3) *Statement regarding compliance.* Each manufacturer must provide a statement regarding whether or not the manufacturer complied with 49 CFR 541.5 requirements as applicable to the period covered by the report, and the basis for that statement.

§ 545.7 Reporting requirements for vehicles listed in § 541(b)(2).

(a) *General reporting requirements.* Within 60 days after the end of the production year ending August 31, 2007, each manufacturer must submit a report to the National Highway Traffic Safety Administration concerning small-volume lines that were manufactured between September 1, 2006 and August 31, 2007. Each report must—

(1) Identify the manufacturer;

(2) State the full name, title, and address of the official responsible for preparing the report;

(3) Identify the production year being reported on;

(4) Provide the information specified in paragraph (b) of this section;

(5) Be written in the English language; and

(6) Be submitted to: Administrator, National Highway Traffic Safety Administration, Room, 400 7th Street, SW., Washington, DC 20590.

(b) *Report content.* Within 60 days after the end of the production year ending August 31, 2007, each manufacturer shall provide: (1) The name of each small-volume line the manufacturer produces; (2) the number of motor vehicles in each small-volume line the manufacturer produced.

§ 545.8 Records.

Each manufacturer shall maintain records of the Vehicle Identification Number for each vehicle for which information is reported under § 545.6(b)(2) and § 545.7(b)(2) until December 31, 2008.

§ 545.9 Petition to extend period to file report.

A manufacturer may petition for extension of time to submit a report under this part. A petition will be granted only if the petitioner shows good cause for the extension and if the extension is consistent with the public interest. The petition must be received not later than 15 days before expiration of the time stated in § 545.5(a). The filing of a petition does not automatically extend the time for filing a report. The petition must be submitted to: Administrator, National Highway Traffic Safety Administration, 400 7th Street, SW., Washington, DC 20590.

Issued on May 9, 2005.

Jeffrey W. Runge,

Administrator.

[FR Doc. 05–9708 Filed 5–18–05; 8:45 am]

BILLING CODE 4910–59–P

DEPARTMENT OF COMMERCE

National Oceanic and Atmospheric Administration

50 CFR Part 660

[Docket No.; 040830250–5109–04; I.D. 081304C]

RIN 0648–AS27

Magnuson-Stevens Act Provisions; Fisheries Off West Coast States and in the Western Pacific; Pacific Coast Groundfish Fishery; Biennial Specifications and Management Measures; Correction

AGENCY: National Marine Fisheries Service (NMFS), National Oceanic and

Atmospheric Administration (NOAA), Commerce.

ACTION: Final rule; correction.

SUMMARY: On May 3, 2005, the 2005 Pacific whiting (whiting) fishery sector allocations were published in the **Federal Register** in a final rule that established the whiting fishery specifications in the U.S. exclusive economic zone (EEZ) and state waters off the coasts of Washington, Oregon, and California. The catcher/processor and mothership allocation percentage values in the final rule were transposed. This document corrects that error.

DATES: Effective May 19, 2005.

FOR FURTHER INFORMATION CONTACT: Becky Renko (Northwest Region, NMFS) 206–526–6150.

SUPPLEMENTARY INFORMATION: On May 3, 2005, a final rule was published that established the 2005 fishery specifications for Pacific whiting (whiting) in the U.S. exclusive economic zone and state waters off the coasts of Washington, Oregon, and California was published in the **Federal Register** on (May 3, 2005; 70 FR 22808). The catcher/processor and mothership sector allocation percentages shown in § 660.323, (a)(2)(i) and (a)(2)(ii) were transposed. Whiting is allocated between the three sectors of the commercial fishery, as follows: 34 percent for the catcher/processor sector; 24 percent for the mothership sector; and 42 percent for the shoreside sector.

Correction

In the rule FR Doc. 05–8817, in the issue of Tuesday, May 3, 2005 (70 FR 22808), make the following correction:

1. On page 22812, in column 2, § 660.323, paragraphs(a)(2)(i) and (a)(2)(ii) are revised to read as follows:

§ 660.323 Pacific whiting allocations, allocation attainment, and inseason allocation, reapportionment.

(a) * * *

(2) * * *

(i) Catcher/processor sector–78,903 mt(34 percent);

(ii) Mothership sector–55,696 mt(24 percent);

* * * * *

Dated: May 13, 2005.

Rebecca Lent,

Deputy Assistant Administrator for Regulatory Programs, National Marine Fisheries Service.

[FR Doc. 05–10023 Filed 5–18–05; 8:45 am]

BILLING CODE 3510–22–S

Proposed Rules

Federal Register
Vol. 70, No. 96
Thursday, May 19, 2005

This section of the FEDERAL REGISTER contains notices to the public of the proposed issuance of rules and regulations. The purpose of these notices is to give interested persons an opportunity to participate in the rule making prior to the adoption of the final rules.

DEPARTMENT OF TRANSPORTATION

Federal Aviation Administration

14 CFR Part 39

[Docket No. FAA–2005–20968; Directorate Identifier 94–CE–15–AD]

RIN 2120–AA64

Airworthiness Directives; Tiger Aircraft LLC Models AA–5, AA–5A, AA–5B, and AG–5B Airplanes

AGENCY: Federal Aviation Administration (FAA), DOT.

ACTION: Notice of proposed rulemaking (NPRM).

SUMMARY: The FAA proposes to revise Airworthiness Directive (AD) 95–19–15, which applies to all Tiger Aircraft LLC (Type Certificate A16EH formerly held by American General Aircraft Corporation and Grumman American Aviation Corporation) Models AA–5, AA–5A, AA–5B, and AG–5B airplanes. AD 95–19–15 currently requires you to inspect the wing attach shoulder bolts for fretting, scoring, wear, or enlarged or elongated mounting holes (known as damage from hereon); replace any damaged parts; repair any damaged areas; inspect the wing spar at the center spar clearance gap for excessive clearance; and shim the spar if excessive clearance is found. Since we issued AD 95–19–15, FAA has received and evaluated new service information that limits the serial numbers for the Model AG–5B airplanes of AD 95–19–15. Consequently, this proposed AD retains all the actions of AD 95–19–15 and includes the serial numbers for the Model AG–5B airplanes in the applicability section. We are issuing this proposed AD to prevent wing attach shoulder bolt failure, which, if not detected and corrected, could lead to structural damage of the wing/fuselage to the point of failure.

DATES: We must receive any comments on this proposed AD by July 18, 2005.

ADDRESSES: Use one of the following to submit comments on this proposed AD:

- *DOT Docket web site:* Go to *http://dms.dot.gov* and follow the instructions for sending your comments electronically.
- *Government-wide rulemaking web site:* Go to *http://www.regulations.gov* and follow the instructions for sending your comments electronically.
- *Mail:* Docket Management Facility; U.S. Department of Transportation, 400 Seventh Street, SW., Nassif Building, Room PL–401, Washington, DC 20590–001.
- *Fax:* 1–202–493–2251.
- *Hand Delivery:* Room PL–401 on the plaza level of the Nassif Building, 400 Seventh Street, SW., Washington, DC, between 9 a.m. and 5 p.m., Monday through Friday, except Federal holidays.

To get the service information identified in this proposed AD, contact American General Aircraft Corporation, P.O. Box 5737, Greenville, MS 38704.

To view the comments to this proposed AD, go to *http://dms.dot.gov.* The docket number is FAA–2005–20968; Directorate Identifier 94–CE–15–AD.

FOR FURTHER INFORMATION CONTACT: Richard Beckwith, Aerospace Engineer, 1600 Stewart Avenue, Suite 410, Westbury, NY 11590; telephone: 516–794–5531; facsimile: 516–794–5531.

SUPPLEMENTARY INFORMATION:

Comments Invited

How do I comment on this proposed AD? We invite you to submit any written relevant data, views, or arguments regarding this proposal. Send your comments to an address listed under **ADDRESSES.** Include the docket number, ''FAA–2005–20968; Directorate Identifier 94–CE–15–AD'' at the beginning of your comments. We will post all comments we receive, without change, to *http://dms.dot.gov,* including any personal information you provide. We will also post a report summarizing each substantive verbal contact with FAA personnel concerning this proposed rulemaking. Using the search function of our docket web site, anyone can find and read the comments received into any of our dockets, including the name of the individual who sent the comment (or signed the comment on behalf of an association, business, labor union, etc.). This is docket number FAA–2005–20968. You may review the DOT's complete Privacy Act Statement in the **Federal Register** published on April 11, 2000 (65 FR 19477–78) or you may visit *http://dms.dot.gov.*

Are there any specific portions of this proposed AD I should pay attention to? We specifically invite comments on the overall regulatory, economic, environmental, and energy aspects of this proposed AD. If you contact us through a nonwritten communication and that contact relates to a substantive part of this proposed AD, we will summarize the contact and place the summary in the docket. We will consider all comments received by the closing date and may amend this proposed AD in light of those comments and contacts.

Docket Information

Where can I go to view the docket information? You may view the AD docket that contains the proposal, any comments received, and any final disposition in person at the DMS Docket Offices between 9 a.m. and 5 p.m. (eastern standard time), Monday through Friday, except Federal holidays. The Docket Office (telephone 1–800–647–5227) is located on the plaza level of the Department of Transportation NASSIF Building at the street address stated in **ADDRESSES.** You may also view the AD docket on the Internet at *http://dms.dot.gov.* The comments will be available in the AD docket shortly after the DMS receives them.

Discussion

Has FAA taken any action to this point? The FAA has received four reports (three in England and one in the United States) of wing attach shoulder bolt failure on Tiger Aircraft LLC (Type Certificate A16EH formerly held by American General Aircraft Corporation (AGAC) and Grumman American Aviation Corporation (GAAC)) Models AA–5, AA–5A, AA–5B, and AG–5B airplanes. Investigation reveals that excessive wing to center spar clearance could have contributed to the bolt failures; however, in each of the four instances, the bolts failed before reaching the service life of 7,250 hours time-in-service (TIS). The FAA has determined that, to assure the safety of these airplanes, the established service life of these bolts needed review. Our review of service life on Tiger Aircraft LLC (Type Certificate A16EH formerly held by AGAC and GAAC) Models AA–5, AA–5A, AA–5B, and AG–5B

airplanes caused us to issue AD 95–19–15, Amendment 39–9377 (60 FR 48628, September 20, 1995). AD 95–19–15 currently requires the following on Tiger Aircraft LLC (Type Certificate A16EH formerly held by AGAC and GAAC) Models AA–5, AA–5A, AA–5B, and AG–5B airplanes:

—Inspect the wing attach shoulder bolts for fretting, scoring, wear, or enlarged or elongated mounting holes (known as damage from hereon), and replace any damaged parts and repairing any damaged areas;

—Inspect the wing spar at the center spar clearance gap for excessive clearance; and

—Shim the spar if excessive clearance is found.

What has happened since AD 95–19–15 to initiate this proposed AD action? Since we issued AD 95–19–15, FAA has received and evaluated new service information that limits the serial numbers for the Model AG–5B airplanes of AD 95–19–15.

What is the potential impact if FAA took no action? Wing attach shoulder bolt failure, if not detected and corrected, could lead to structural damage of the wing/fuselage to the point of failure.

Is there service information that applies to this subject? The AGAC has issued Service Bulletin No. SB–185–A, Revision A, dated January 10, 2005. This revision updates the serial number effectivity for the Model AG–5B, company name and address change, clarifies inspection times, and reflects the release of the Tiger Aircraft Model AG–5B airplane maintenance manual.

What are the provisions of this service information? The service bulletin includes procedures for:

—Inspecting for fretting, scoring, or wear (removal of the cad plating) to the shoulder of the inboard wing attach shoulder bolt;

—Replacing any bolt found with fretting, scoring, or threads that contact the shoulder of the bolt;

—Inspecting the shoulder bolt profile for a smooth machined area between the threads and the shoulder bevel;

—Inspecting the mounting holes in the wing spar and the center section spar for enlargement or elongation that exceeds the specified dimension;

—Reaming and bushing any mounting hole that exceeds the specified dimension; and

—Inspecting the wing spar at the center spar clearance gap for excessive clearance, and shimming the spar if excessive clearance is found.

FAA's Determination and Requirements of This Proposed AD

What has FAA decided? We have evaluated all pertinent information and identified an unsafe condition that is likely to exist or develop on other products of this same type design. For this reason, we are proposing AD action.

What would this proposed AD require? This proposed AD would revise AD 95–19–15 with a new AD that would incorporate the actions in the previously-referenced service bulletin.

How does the revision to 14 CFR part 39 affect this proposed AD? On July 10, 2002, we published a new version of 14 CFR part 39 (67 FR 47997, July 22, 2002), which governs FAA's AD system. This regulation now includes material that relates to altered products, special flight permits, and alternative methods of compliance. This material previously was included in each individual AD. Since this material is included in 14 CFR part 39, we will not include it in future AD actions.

Costs of Compliance

How many airplanes would this proposed AD impact? We estimate that this proposed AD affects 3,700 airplanes in the U.S. registry.

What would be the cost impact of this proposed AD on owners/operators of the affected airplanes? We estimate the following costs to do this proposed inspection:

Labor cost	Parts cost	Total cost per airplane	Total cost on U.S. operators
10 work hours X $65 = $650	Not included	$650	3,700 X $650 = $2,405,000.

We have no way of determining the number of airplanes that may need this replacement of any damaged bolts or repair as a result of the proposed inspection.

What is the difference between the cost impact of this proposed AD and the cost impact of AD 95–19–15? The differences are the change in the labor cost work hour factor ($60) used in AD–95–19–15 and the labor cost work hour factor of $65 used in this NPRM and the change in the serial number applicability. There are no additional actions required in this proposed AD.

Authority for This Rulemaking

What authority does FAA have for issuing this rulemaking action? Title 49 of the United States Code specifies the FAA's authority to issue rules on aviation safety. Subtitle I, Section 106 describes the authority of the FAA Administrator. Subtitle VII, Aviation Programs, describes in more detail the scope of the agency's authority.

We are issuing this rulemaking under the authority described in Subtitle VII, Part A, Subpart III, Section 44701, ''General requirements.'' Under that section, Congress charges the FAA with promoting safe flight of civil aircraft in air commerce by prescribing regulations for practices, methods, and procedures the Administrator finds necessary for safety in air commerce. This regulation is within the scope of that authority because it addresses an unsafe condition that is likely to exist or develop on products identified in this AD.

Regulatory Findings

Would this proposed AD impact various entities? We have determined that this proposed AD would not have federalism implications under Executive Order 13132. This proposed AD would not have a substantial direct effect on the States, on the relationship between the national Government and the States, or on the distribution of power and responsibilities among the various levels of government.

Would this proposed AD involve a significant rule or regulatory action? For the reasons discussed above, I certify that this proposed AD:

1. Is not a ''significant regulatory action'' under Executive Order 12866;

2. Is not a ''significant rule'' under the DOT Regulatory Policies and Procedures (44 FR 11034, February 26, 1979); and

3. Will not have a significant economic impact, positive or negative, on a substantial number of small entities under the criteria of the Regulatory Flexibility Act.

We prepared a summary of the costs to comply with this proposed AD (and other information as included in the Regulatory Evaluation) and placed it in the AD Docket. You may get a copy of this summary by sending a request to us at the address listed under **ADDRESSES.** Include ''AD Docket FAA–2005–20968; Directorate Identifier 94-CE–15-AD'' in your request.

List of Subjects in 14 CFR Part 39

Air transportation, Aircraft, Aviation safety, Safety.

The Proposed Amendment

Accordingly, under the authority delegated to me by the Administrator, the Federal Aviation Administration proposes to amend 14 CFR part 39 as follows:

PART 39—AIRWORTHINESS DIRECTIVES

1. The authority citation for part 39 continues to read as follows:

Authority: 49 U.S.C. 106(g), 40113, 44701.

§ 39.13 [Amended]

2. The FAA amends § 39.13 by removing Airworthiness Directive (AD) 95–19–15, Amendment 39–9377 (60 FR 48628, September 20, 1995), and by adding a new AD to read as follows:

Tiger Aircraft LLC (Type Certificate A16EH formerly held by American General Aircraft Corporation and Grumman American Aviation Corporation): Docket No. FAA–2005–20968; Directorate Identifier 94–CE–15–AD

When Is the Last Date I Can Submit Comments on This Proposed AD?

(a) We must receive comments on this proposed airworthiness directive (AD) by July 18, 2005.

What Other ADs Are Affected By This Action?

(b) This AD revises AD 95–19–15, Amendment 39–9377.

What Airplanes Are Affected by This AD?

(c) This AD affects the following airplane models and serial numbers that are certificated in any category:

Model	Serial numbers
AA–5	All Serial Numbers.
AA–5A	All Serial Numbers.
AA–5B	All Serial Numbers.
AG–5B	99998, 10000 through 10174.

What Is the Unsafe Condition Presented in This AD?

(d) This AD is the result of FAA receiving and evaluating new service information that limits the serial numbers for the Model AG–5B airplanes of AD 95–19–15. The actions specified in this AD are intended to prevent wing attach shoulder bolt failure, which, if not detected and corrected, could lead to structural damage of the wing/fuselage to the point of failure.

What Must I Do To Address This Problem?

(e) To address this problem, you must do the following, unless already done:

Actions	Compliance	Procedures
(1) Inspect any inboard wing attach shoulder bolt for: (i) Fretting, scoring, or wear (removal of the cad plating) to the shoulder of the bolt. (ii) A smooth machined area between the threads and the shoulder bevel of the shoulder bolt profile.	Within the next 100 hours aircraft time-in-service (TIS) after November 17, 1995 (the effective date of AD 95–19–15), unless already done.	Follow American General Aircraft Corporation Service Bulletin No. SB–185–A, Revision A, dated January 10, 2005.
(2) Replace any inboard wing attach shoulder bolt with wear (removal of the cad plating from the shoulder of the bolt) or if the threads contact the shoulder of the bolt found during the inspections required in paragraph (e)(1) of this Ad.	Before further flight after the inspection required by paragraph (e)(1) of this Ad.	Follow American General Aircraft Corporation Service Bulletin, No. SB–185–A, Revision A, January 10, 2005.
(3) Inspect the mounting holes in the wing spar and the center section spar for enlargement or elongation that exceeds specified dimension.	Within the next 100 hours aircraft time-in-service (TIS) after November 17, 1995 (the effective date of AD 95–19–15), unless already done.	Follow American General Aircraft Corporation Service Bulletin No. SB–185–A, Revision A, dated of January 10, 2005.
(4) Ream and bush any mounting hole that exceeds the specified dimension found during the inspection required by paragraph (e)(3) of this AD.	Before further flight after the inspection required by paragraph (e)(3) of this AD.	Follow American General Aircraft Corporation Service Bulletin No. SB–185–A, Revision A, dated January 10, 2005.
(5) Inspect the wing spar at the center spar clearance gap for excessive clearance, and shim the spar if excessive clearance is found.	Before further flight after the inspection required by required by Service Bulletin paragraphs (e)(1) of this AD.	Follow American General Aircraft Corporation Service Bulletin No. SB–185–A, Revision A, dated January 10, 2005.
(6) Do not install any wing attach shoulder bolt that has wear resulting in removal of the cad plating from the shoulder of the bolt or if the threads contact the shoulder bevel of the shoulder bolt profile.	As of the effective date of this Ad	Not Applicable.

May I Request an Alternative Method of Compliance?

(f) You may request a different method of compliance or a different compliance time for this AD by following the procedures in 14 CFR 39.19. Unless FAA authorizes otherwise, send your request to your principal inspector. The principal inspector may add comments and will send your request to the Manager, New York Aircraft Certification Office (ACO), FAA. For information on any already approved alternative methods of compliance, contact Richard Beckwith, Aerospace Engineer, 1600 Stewart Avenue, Suite 410, Westbury, NY 11590; telephone: 516–794–5531; facsimile: 516–794–5531.

May I Get Copies of the Documents Referenced in This AD?

(g) To get copies of the documents referenced in this AD, contact American General Aircraft Corporation, P.O. Box 5737, Greenville, MS 38704. To view the AD docket, go to the Docket Management Facility; U.S. Department of Transportation, 400 Seventh Street, SW., Nassif Building, Room PL–401, Washington, DC, or on the Internet at *http://dms.dot.gov.* The docket number is FAA–2005–20968; Directorate ID 94–CE–15–AD.

Issued in Kansas City, Missouri, on May 13, 2005.

David R. Showers,

Acting Manager, Small Airplane Directorate, Aircraft Certification Service.

[FR Doc. 05–9974 Filed 5–18–05; 8:45 am]

BILLING CODE 4910–13–P

DEPARTMENT OF TRANSPORTATION

Federal Aviation Administration

14 CFR Part 39

[Docket No. FAA–2005–21109; Directorate Identifier 2005–CE–21–AD]

RIN 2120–AA64

Airworthiness Directives; The Cessna Aircraft Company Models 525, 525A, and 525B Airplanes

AGENCY: Federal Aviation Administration (FAA), DOT.

ACTION: Notice of proposed rulemaking (NPRM).

SUMMARY: The FAA proposes to adopt a new airworthiness directive (AD) for certain The Cessna Aircraft Company (Cessna) Models 525, 525A, and 525B airplanes. This proposed AD would require you to install identification sleeves on the wiring for both engine fire extinguisher bottles. This proposed AD results from reports of incorrectly connecting the wires to the engine fire extinguisher bottles. We are issuing this proposed AD to prevent incorrect installation of the wires to the engine fire extinguisher bottles, which could result in failure of the engine fire extinguisher bottles to discharge when activated. This failure could lead to the inability to control an engine fire.

DATES: We must receive any comments on this proposed AD by July 19, 2005.

ADDRESSES: Use one of the following to submit comments on this proposed AD:

- *DOT Docket Web site:* Go to *http://dms.dot.gov* and follow the instructions for sending your comments electronically.
- *Government-wide rulemaking Web site:* Go to *http://www.regulations.gov* and follow the instructions for sending your comments electronically.
- *Mail:* Docket Management Facility; U.S. Department of Transportation, 400 Seventh Street, SW., Nassif Building, Room PL–401, Washington, DC 20590–0001.
- *Fax:* 1–202–493–2251.
- *Hand Delivery:* Room PL–401 on the plaza level of the Nassif Building, 400 Seventh Street, SW., Washington, DC, between 9 a.m. and 5 p.m., Monday through Friday, except Federal holidays.

To get the service information identified in this proposed AD, contact The Cessna Aircraft Company, Citation Marketing Division, Product Support P.O. Box 7706, Wichita, Kansas 67277; telephone: (316) 517–6000; facsimile: (316) 517–8500.

To view the comments to this proposed AD, go to *http://dms.dot.gov.* The docket number is FAA–2005–21109; Directorate Identifier 2005–CE–21–AD.

FOR FURTHER INFORMATION CONTACT: James P. Galstad, Aerospace Engineer, FAA, Wichita ACO, 1801 Airport Road, Mid-Continent Airport, Wichita, Kansas 67209; telephone: (316) 946–4135; facsimile: (316) 946–4107.

SUPPLEMENTARY INFORMATION:

Comments Invited

How do I comment on this proposed AD? We invite you to submit any written relevant data, views, or arguments regarding this proposal. Send your comments to an address listed under **ADDRESSES**. Include the docket number, ''FAA–2005–21109; Directorate Identifier 2005–CE–21–AD'' at the beginning of your comments. We will post all comments we receive, without change, to *http://dms.dot.gov,* including any personal information you provide. We will also post a report summarizing each substantive verbal contact with FAA personnel concerning this proposed rulemaking. Using the search function of our docket Web site, anyone can find and read the comments received into any of our dockets, including the name of the individual who sent the comment (or signed the comment on behalf of an association, business, labor union, etc.). This is docket number FAA–2005–21109; Directorate Identifier 2005–CE–21–AD. You may review the DOT's complete Privacy Act Statement in the **Federal Register** published on April 11, 2000 (65 FR 19477–78) or you may visit *http://dms.dot.gov.*

Are there any specific portions of this proposed AD I should pay attention to? We specifically invite comments on the overall regulatory, economic, environmental, and energy aspects of this proposed AD. If you contact us through a nonwritten communication and that contact relates to a substantive part of this proposed AD, we will summarize the contact and place the summary in the docket. We will consider all comments received by the closing date and may amend this proposed AD in light of those comments and contacts.

Docket Information

Where can I go to view the docket information? You may view the AD docket that contains the proposal, any comments received, and any final disposition in person at the DMS Docket Offices between 9 a.m. and 5 p.m. (eastern standard time), Monday through Friday, except Federal holidays. The Docket Office (telephone 1–800–647–5227) is located on the plaza level of the Department of Transportation NASSIF Building at the street address stated in **ADDRESSES**. You may also view the AD docket on the Internet at *http://dms.dot.gov.* The comments will be available in the AD docket shortly after the DMS receives them.

Discussion

What events have caused this proposed AD? Wires connected to the engine fire extinguisher bottles on Cessna Models 525B and 560XL airplane were found reversed. Installing the wiring in an incorrect configuration resulted from a lack of clarity in the wiring schematics for connecting the wires and testing the connections.

The same lack of clarity in the wiring schematics for connecting the wires and testing the connections also exists for Cessna Models 525 and 525A airplanes.

An incorrect wiring configuration installation could go undetected because the existing circuit checks appear normal during routine checks. However, the engine fire extinguisher bottles will not discharge when activated.

What is the potential impact if FAA took no action? If not detected and corrected, incorrect wiring of the engine fire extinguisher bottles could result in failure of the engine fire extinguisher bottles to discharge when activated. This failure could lead to the inability to control an engine fire.

Is there service information that applies to this subject? Cessna has issued the following service bulletins:

—Citation Service Bulletin SB525–26–01, dated April 5, 2005;
—Citation Service Bulletin SB525A–26–02, dated April 5, 2005; and
—Citation Service Bulletin SB525B–26–01, dated April 5, 2005.

What are the provisions of this service information? These service bulletins include procedures for:

—Installing identification sleeves on wires connecting to the engine fire extinguisher bottles;
—Reconnecting the wires to the engine fire extinguisher bottles; and
—Testing the wiring for correct installation.

FAA's Determination and Requirements of This Proposed AD

What has FAA decided? We have evaluated all pertinent information and identified an unsafe condition that is likely to exist or develop on other products of this same type design. For this reason, we are proposing AD action.

What would this proposed AD require? This proposed AD would

require you to incorporate the actions in the previously-referenced service bulletin.

How does the revision to 14 CFR part 39 affect this proposed AD? On July 10, 2002, we published a new version of 14 CFR part 39 (67 FR 47997, July 22, 2002), which governs FAA's AD system. This regulation now includes material that relates to altered products, special flight permits, and alternative methods of compliance. This material previously was included in each individual AD. Since this material is included in 14 CFR part 39, we will not include it in future AD actions.

Costs of Compliance

How many airplanes would this proposed AD impact? We estimate that this proposed AD affects 578 airplanes in the U.S. registry.

What would be the cost impact of this proposed AD on owners/operators of the affected airplanes? We estimate the following costs to accomplish this proposed modification:

Labor cost	Parts cost	Total cost per airplane	Total cost on U.S. operators
4 workhours × $65 per hour = $260	Not applicable	$260.00	$260 × 578 = $150,280.

Cessna will provide warranty credit for the modification to the extent stated in the supplemental data to the service information.

Authority for This Rulemaking

What authority does FAA have for issuing this rulemaking action? Title 49 of the United States Code specifies the FAA's authority to issue rules on aviation safety. Subtitle I, Section 106 describes the authority of the FAA Administrator. Subtitle VII, Aviation Programs, describes in more detail the scope of the agency's authority.

We are issuing this rulemaking under the authority described in Subtitle VII, Part A, Subpart III, Section 44701, ''General requirements.'' Under that section, Congress charges the FAA with promoting safe flight of civil aircraft in air commerce by prescribing regulations for practices, methods, and procedures the Administrator finds necessary for safety in air commerce. This regulation is within the scope of that authority because it addresses an unsafe condition that is likely to exist or develop on products identified in this AD.

Regulatory Findings

Would this proposed AD impact various entities? We have determined that this proposed AD would not have federalism implications under Executive Order 13132. This proposed AD would not have a substantial direct effect on the States, on the relationship between the National Government and the States, or on the distribution of power and responsibilities among the various levels of government.

Would this proposed AD involve a significant rule or regulatory action? For the reasons discussed above, I certify that this proposed AD:

1. Is not a ''significant regulatory action'' under Executive Order 12866;
2. Is not a ''significant rule'' under the DOT Regulatory Policies and Procedures (44 FR 11034, February 26, 1979); and
3. Will not have a significant economic impact, positive or negative, on a substantial number of small entities under the criteria of the Regulatory Flexibility Act.

We prepared a summary of the costs to comply with this proposed AD (and other information as included in the Regulatory Evaluation) and placed it in the AD Docket. You may get a copy of this summary by sending a request to us at the address listed under **ADDRESSES**. Include ''AD Docket FAA–2005–21109; Directorate Identifier 2005–CE–21–AD'' in your request.

List of Subjects in 14 CFR Part 39

Air transportation, Aircraft, Aviation safety, Safety.

The Proposed Amendment

Accordingly, under the authority delegated to me by the Administrator, the Federal Aviation Administration proposes to amend 14 CFR part 39 as follows:

PART 39—AIRWORTHINESS DIRECTIVES

1. The authority citation for part 39 continues to read as follows:

Authority: 49 U.S.C. 106(g), 40113, 44701.

§ 39.13 [Amended]

2. The FAA amends § 39.13 by adding the following new airworthiness directive (AD):

The Cessna Aircraft Company: Docket No. FAA–2005–21109; Directorate Identifier 2005–CE–21–AD

When Is the Last Date I Can Submit Comments on This Proposed AD?

(a) We must receive comments on this proposed airworthiness directive (AD) by July 19, 2005.

What Other ADs Are Affected by This Action?

(b) None.

What Airplanes Are Affected by This AD?

(c) This AD affects the following airplane models and serial numbers that are certificated in any category:

Model	Serial Nos.
525	525–0001 through 525–0600.
525A	525A–0001 through 525A–0234.
525B	525B–0001 through 525B–0035.

What Is the Unsafe Condition Presented in This AD?

(d) This AD is the result of reports about the possibility to incorrectly connect the wires to the engine fire extinguisher bottles. The actions specified in this AD are intended to prevent incorrect installation of the wires to the engine fire extinguisher bottles, which could result in failure of the engine fire extinguisher bottles to discharge when activated. This failure could lead to the inability to control an engine fire.

What Must I Do To Address This Problem?

(e) To address this problem, you must do the following:

Actions	Compliance	Procedures
(1) Install identification sleeves on the wires for both engine fire extinguisher bottles.	Within the next 60 days or 100 hours time-in-service after the effective date of this AD, whichever occurs first.	Follow the Accomplishment Instructions in: (i) Cessna Citation Service Bulletin SB525–26–01; (ii) Cessna Citation Service Bulletin SB525A–26–02; or (iii) Cessna Citation Service Bulletin SB525B–26–01, all dated April 5, 2005, as applicable.

Actions	Compliance	Procedures
(2) Reconnect the wires to both engine fire extinguisher bottles.	Prior to further flight after the sleeve installation required in paragraph (e)(1) of this AD.	Use the service information in paragraphs (e)(1)(i) through (e)(1)(iii) of this AD
(3) Test the wires for correct installation	Prior to further flight after reconnecting the wires as required in paragraph (e)(2) of this AD..	Use the service information in paragraphs (e)(1)(i) through (e)(1)(iii) of this AD.

May I Request an Alternative Method of Compliance?

(f) You may request a different method of compliance or a different compliance time for this AD by following the procedures in 14 CFR 39.19. Unless FAA authorizes otherwise, send your request to your principal inspector. The principal inspector may add comments and will send your request to the Manager, Wichita Aircraft Certification Office (ACO), FAA. For information on any already approved alternative methods of compliance, contact James P. Galstad, Aerospace Engineer, FAA Wichita ACO, 1801 Airport Road, Mid-Continent Airport, Wichita, Kansas 67209; telephone: (316) 946–4135; facsimile: (316) 946–4107.

May I Get Copies of the Documents Referenced in This AD?

(g) To get copies of the documents referenced in this AD, contact The Cessna Aircraft Company, Citation Marketing Division, Product Support P.O. Box 7706, Wichita, Kansas 67277; telephone: (316) 517–6000; facsimile: (316) 517–8500. To view the AD docket, go to the Docket Management Facility; U.S. Department of Transportation, 400 Seventh Street, SW., Nassif Building, Room PL–401, Washington, DC, or on the Internet at *http://dms.dot.gov.* The docket number is Docket No. FAA–2005–21109; Directorate Identifier 2005–CE–21–AD.

Issued in Kansas City, Missouri, on May 12, 2005.

Kim Smith,

Acting Manager, Small Airplane Directorate, Aircraft Certification Service.

[FR Doc. 05–9988 Filed 5–18–05; 8:45 am]

BILLING CODE 4910–13–P

DEPARTMENT OF THE INTERIOR

Bureau of Indian Affairs

25 CFR Part 61

RIN 1076–AE44

Preparation of Rolls of Indians

AGENCY: Bureau of Indian Affairs, Interior.

ACTION: Proposed rule.

SUMMARY: The Bureau of Indian Affairs is proposing to amend its regulations governing the compilation of rolls of Indians in order to open the enrollment application process for the Western Shoshone Identifiable Group of Indians. The enrollment application process will give individuals an opportunity to file applications to share in the Western Shoshone judgment fund distribution authorized under the Western Shoshone Claims Distribution Act of July 7, 2004.

DATES: Comments must be received on or before July 18, 2005.

ADDRESSES: You may submit comments, identified by the number 1076–AE44, by any of the following methods:

- Federal rulemaking portal: *http://www.regulations.gov.* Follow the instructions for submitting comments.
- Fax: (202) 208–5113.
- Mail: Daisy West, Office of Tribal Services, Bureau of Indian Affairs, 1951 Constitution Avenue, NW., Mail Stop 320–SIB, Washington, DC 20240.
- Hand delivery: Office of Tribal Services, Bureau of Indian Affairs, 1951 Constitution Avenue, NW., Room 320–SIB, Washington, DC 20240.

You may submit comments on the information collection to the Desk Officer for the Department of the Interior at the Office of Management and Budget, by facsimile at (202) 395–6566 or you may send an e-mail to: *OIRA_DOCKET@omb.eop.gov.* This comment is in addition to comments on the rule.

FOR FURTHER INFORMATION CONTACT: Daisy West, Office of Tribal Services, Bureau of Indian Affairs, (202) 513–7641.

SUPPLEMENTARY INFORMATION:

Additional Notice and Public Meetings

We will take several steps to ensure that all potential applicants are informed of the reopening of the enrollment application period.

(1) We will notify all BIA Regional Directors and Agency Superintendents and require them to post notices in regional offices, agency offices, community centers on and near reservations, and in Indian Health Clinics.

(2) We will notify tribal newspapers and newspapers of general circulation in major communities in Nevada, California, Idaho, Arizona, Oregon and Utah.

(3) We will hold community meetings on or near Indian reservations, including: Duckwater, Duck Valley, Ely, Fallon, Ft. McDermitt, Te-Moak, Timbisha and Yomba.

At each of the community meeting we will:

(1) Inform potential beneficiaries of the opening of the enrollment process for this judgment fund;

(2) Inform potential beneficiaries of eligibility criteria; and

(3) Help applicants to prepare and file applications.

Application Deadline

We will not establish a firm application deadline in this rule. In order to allow adequate time for submitting and processing applications we will establish a deadline using the following three steps:

Step 1. One hundred and eighty days (180) after opening the enrollment application process, we will count all applications that we have received.

Step 2. We will note the date on which we complete processing 90 percent of the applications that we receive by the date established under Step 1.

Step 3. The application deadline will be 90 days after the date noted in Step 2.

For example, if we receive 10 applications during the first 180 days after opening the application process, the final application deadline date will be 90 days after we process 9 applications. Similarly, if we receive 10,000 applications during the first 180 days after opening the application process, the final application deadline date will be 90 days after we process 9,000 applications. After we establish the application deadline, we will notify the same regional directors, agency superintendents, and local newspapers that we notify after publishing this rule. (See the section in this preamble titled ''Additional Notice and Public Meetings.'') Our notification will include application/enrollment criteria.

Regulatory Planning and Review (Executive Order 12866)

This document is not a significant rule and is not subject to review by the Office of Management and Budget under Executive Order 12866.

(1) This rule will not have an effect of $100 million or more on the economy. It will not adversely affect in a material way the economy, productivity competition, jobs, the environment,

public health or safety, or State, local, or tribal governments or communities. This rule only involves individual Indians who wish to apply for a share of the Western Shoshone judgment funds.

(2) This rule will not create a serious inconsistency or otherwise interfere with an action taken or planned by another agency. This rule does not impact other agency programs.

(3) This rule does not alter the budgetary effects or entitlement, grants, user fees, or loan programs or the rights or obligations of their recipients. This rule does not impact other agency programs. The funds distributed to eligible applicants will not be considered to be income or resources for any purpose; or be used as a basis for denying or reducing financial assistance or any other benefit to which a household or Western Shoshone member would otherwise be entitled to receive under the Social Security Act, or any other Federal or federally-assisted program. (See subsection 3(c)(3) of Pub. L. 108–270).

(4) This rule does not raise novel legal or policy issues. All potential legal or policy issues were litigated in several Federal courts during the 1980s and 1990s, before the enactment of Public Law 108–270.

Regulatory Flexibility Act

The Department of the Interior certifies that this document will not have a significant economic effect on a substantial number of small entities under the Regulatory Flexibility Act (5 U.S.C. 601 *et seq.*). Because this rule makes technical changes that do not affect the substance of the rules there is no economic effect at all, other than to improve the utility of the rules for users.

Small Business Regulatory Enforcement Fairness Act (SBREFA)

This rule is not a major rule under 5 U.S.C. 804(2), the Small Business Regulatory Enforcement Fairness Act. This rule:

(1) Does not have an annual effect on the economy of $100 million or more. This rule does not involve small business; it only involves individuals who wish to apply to share in the judgment fund distribution.

(2) Will not cause a major increase in costs or prices for consumers, individual industries, Federal, State, or local government agencies, or geographic regions.

(3) Does not have significant adverse effects on competition, employment, investment, productivity, innovation, or the ability of U.S.-based enterprises to compete with foreign-based enterprises.

Unfunded Mandates Reform Act

This rule does not impose an unfunded mandate on State, local, or tribal governments or the private sector of more than $100 million per year. The rule does not have a significant or unique effect on State, local or tribal governments or the private sector. A statement containing the information required by the Unfunded Mandates Reform Act (1 U.S.C. 1531 *et seq.*) is not required. This rule does not involve small business; it only involves individuals who wish to apply to share in the judgment fund distribution.

Takings (Executive Order 12630)

In accordance with Executive Order 12630, the rule does not have significant takings implications. This rule does not affect property rights of the public. This rule does not involve a taking, it only involves individuals who wish to apply to share in the judgment fund distribution. A takings implication assessment is not required.

Federalism (Executive Order 13132)

In accordance with Executive Order 13132, this proposed rule does not have significant federalism effects. A significant assessment is not required. The proposed rule will not have substantial direct effects on a state or tribe, in the relationship between the Federal Government and a state or tribe, or on the distribution of power and responsibilities among the various levels of government.

Civil Justice Reform (Executive Order 12988)

In accordance with Executive Order 12988, the Office of the Solicitor has determined that this rule does not unduly burden the judicial system and meets the requirements of sections 3(a) and 3(b)(2) of the Order. Any enrollment appeals will be decided by the Secretary of the Interior under 25 U.S.C. 62.

Paperwork Reduction Act

This rule requires collection of information from many enrollees. As required by the Paperwork Reduction Act of 1995 (44 U.S.C. 3507(d)), the Department has submitted a copy of the application to the Office of Management and Budget (OMB) for its review.

1. Information Collection Request

We are seeking your comments on the following Information Collection Request. You may submit comments on the information collection to the Desk Officer for the Department of the Interior at the Office of Management and Budget, by facsimile at (202) 395–6566 or you may send an e-mail to: *OIRA_DOCKET@omb.eop.gov.* This comment is in addition to comments on the rule.

Type of review: New.

Title: Application to Share in the Western Shoshone Funds as a Lineal Descendant of the Western Shoshone Identifiable Group pursuant to the Act of July 7, 2004, Public Law 108–270.

Affected Entities: Individual Indians.

Estimated Number of Respondents: We expect to receive approximately 10,000 applications over a 2-year enrollment period—3,000 the first year and 7,000 the second year.

Abstract: Subsection 3(b) of Public Law 108–270, requires the Secretary of the Interior to prepare a Western Shoshone judgment roll consisting of all individuals who—(a) have at least ¼ degree of Western Shoshone blood; (b) are citizens of the United States; and (c) are living on July 7, 2004. Information is required to obtain a benefit, namely a judgment fund per capita payment.

Ineligible Individuals: Any individual that is certified by the Secretary to be eligible to receive a per capita payment from any other judgment fund based on an aboriginal land claim awarded by the Indian Claims Commission, the United States Claims Court, or the United States Court of Federal Claims, that was appropriated on or before July 7, 2004, will not be listed on the judgment roll.

Burden Statement: The burden of preparing and submitting an application to share in the judgment fund distribution will vary widely depending upon the applicant's age and family history. Individuals 50 years or older will probably spend an average of 1 hour per response. Those individuals 30 years and younger, and non-enrolled tribal members may require 20 hours to prepare a response, including the time for reviewing instructions, gathering and maintaining data, and completing and reviewing the form. The applicants are required to file only once during the estimated 2-year enrollment application period. We estimate that the total burden hours for the entire process is 112,000 hours for a 2-year annual average of 60,000 hours. We will not conduct or require individuals to respond to a collection of information until we obtain a valid Office of Management and Budget control number. We will print the approval number on the form.

2. Request for Comments

We need your comments to:

(a) Evaluate whether the proposed collection of information is necessary for the proper performance of the functions of the agency, including

whether the information will have practical utility.

(b) Evaluate the accuracy of our estimated burden for the proposed collection of information, including the methodology and assumptions we used.

(c) Enhance the quality, utility, and clarity of the information that we want to collect.

(d) Minimize the burden of the collection of information on those who are to respond. This includes possibly using automated or electronic collection techniques or information technology.

Burden means the total time, effort, or financial resources expended by persons to generate, maintain, retain, or disclose or provide information to or for a Federal agency. This includes the time needed to review instructions; to develop, acquire, install and utilize technology and systems for the purpose of collecting, validating, and verifying information, processing and maintaining information, and disclosing and providing information, and disclosing and providing information, to search data sources, to complete and review the collection of information; and to transmit or otherwise disclose the information.

Comments submitted in response to this notice will be summarized and/or included in the request for OMB approval of this information collection. They also will become a matter of public record.

All written comments will be available for public inspection in Room 320 of the South Interior Building, 1951 Constitution Avenue, NW., Washington, DC from 9 a.m. until 3 p.m. (EST), Monday through Friday, excluding legal holidays. If you wish to have your name and address withheld from public view, you must state this prominently at the beginning of your comments. We will honor your request to the extent allowable by law. There may be instances when we will withhold comments from the public for other reasons. Comments submitted by businesses or business representatives will be made available for public review.

OMB must approve or disapprove this collection of information between 30 and 60 days after this document appears in the **Federal Register.** Therefore, a comment to OMB is best assured of having its full effect if OMB receives it within 30 days of publication. This does not affect the deadline for sending comments to us on the proposed regulations.

National Environmental Policy Act

This rule does not constitute a major Federal action significantly affecting the quality of the human environment. A detailed statement under the National Environmental Policy Act of 1969 is not required. This rule does not impact the environment; it only involves individuals who wish to apply to share in the judgment fund distribution.

Government-to-Government Relationship with Tribes

In accordance with the President's memorandum of April 29, 1994, ''Government-to-Government Relations with Native American Tribal Governments'' (59 FR 22951), Executive Order 13175, and 512 DM 2, we understand that we must relate to federally recognized Indian tribes on a government-to-government basis. We have evaluated potential effects on federally recognized Indian tribes and have determined that there are no potential effects. The judgment funds do not belong to any federally recognized tribe, nor can any tribe treat the judgment funds as a tribal resource. The judgment funds will be distributed to individual Indians of Western Shoshone descent, who may or may not be enrolled with a federally recognized tribe.

Effects on the Nation's Energy Supply (Executive Order 13211)

In accordance with Executive Order 13211, this regulation does not have a significant effect on the nation's energy supply, distribution, or use. This rule does not involve the nation's energy supply; it only involves individuals who wish to apply to share in the judgment fund distribution.

List of Subjects in 25 CFR Part 61

Indians, Indians—claims.

Dated: April 8, 2005.

Michael D. Olsen,

Acting Principal Deputy Assistant Secretary—Indian Affairs.

For the reasons set out in the preamble, part 61 of chapter 1 of title 25 Code of Federal Regulations is proposed to be amended as set forth below.

PART 61—PREPARATION OF ROLLS OF INDIANS

1. The authority citation for 25 CFR part 61 is revised to read as follows:

Authority: 5 U.S.C. 301; 25 U.S.C. 2 and 9, 1300d-3(b), 1401 *et seq.,* and Pub. L. 108–270.

2. Section 61.4 is amended by adding a new paragraph (k) to read as follows:

§ 61.4 Qualifications for enrollment and the deadline for filing application forms.

* * * * *

(k) *Western Shoshone Identifiable Group of Indians.* (1) Persons meeting the criteria in this paragraph are entitled to enroll under the Act of July 7, 2004, Public Law 108–270, to share in the distribution of judgment funds awarded by the Indian Claims Commission to the Western Shoshone Identifiable Group of Indians in Docket No. 326–K. To be eligible a person must:

(i) Have at least ¼ degree of Western Shoshone blood;

(ii) Be living on July 7, 2004;

(iii) Be a citizen of the United States; and

(iv) Not be certified by the Secretary to be eligible to receive a per capita payment from any other judgment fund based on an aboriginal land claim awarded by the Indian Claims Commission, the United States Claims Court, or the United States Court of Federal Claims, that was appropriated on or before July 7, 2004.

(2) Indian census rolls prepared by the Agents or Superintendents at Carson or Western Shoshone Agencies between the years of 1885 and 1940, and other documents acceptable to the Secretary will be used in establishing proof of eligibility of an individual to:

(i) Be listed on the judgment roll; and

(ii) Receive a per capita payment under the Western Shoshone Claims Distribution Act.

(3) Application forms for enrollment must be mailed to Tribal Government Services, BIA—Western Shoshone, Post Office Box 4126, Phoenix, Arizona 85030.

(4) The application period will remain open until further notice.

* * * * *

[FR Doc. 05–9941 Filed 5–18–05; 8:45 am]

BILLING CODE 4310–4J–P

DEPARTMENT OF THE TREASURY

Alcohol and Tobacco Tax and Trade Bureau

27 CFR Part 9

[Notice No. 46]

RIN 1513–AB01

Proposed Establishment of the Wahluke Slope Viticultural Area (2005R–026P)

AGENCY: Alcohol and Tobacco Tax and Trade Bureau, Treasury.

ACTION: Notice of proposed rulemaking.

SUMMARY: The Alcohol and Tobacco Tax and Trade Bureau proposes to establish the ''Wahluke Slope'' viticultural area in Grant County, in eastern Washington

State. The proposed 81,000-acre area is totally within the established Columbia Valley viticultural area. We designate viticultural areas to allow vintners to better describe the origin of their wines and to allow consumers to better identify wines they may purchase. We invite comments on this proposed addition to our regulations.

DATES: We must receive written comments on or before July 18, 2005.

ADDRESSES: You may send comments to any of the following addresses:

- Chief, Regulations and Procedures Division, Alcohol and Tobacco Tax and Trade Bureau, Attn: Notice No. 46, P.O. Box 14412, Washington, DC 20044–4412.
- 202–927–8525 (facsimile).
- *nprm@ttb.gov* (e-mail).
- *http://www.ttb.gov/alcohol/rules/index.htm.* An online comment form is posted with this notice on our Web site.
- *http://www.regulations.gov* (Federal e-rulemaking portal; follow instructions for submitting comments).

You may view copies of this notice, the petition, the appropriate maps, and any comments we receive about this notice by appointment at the TTB Library, 1310 G Street, NW., Washington, DC 20220. To make an appointment, call 202–927–2400. You may also access copies of the notice and comments online at *http://www.ttb.gov/alcohol/rules/index.htm.*

See the Public Participation section of this notice for specific instructions and requirements for submitting comments, and for information on how to request a public hearing.

FOR FURTHER INFORMATION CONTACT: N.A. Sutton, Regulations and Procedures Division, Alcohol and Tobacco Tax and Trade Bureau, 925 Lakeville St., No. 158, Petaluma, California 94952; telephone 415–271–1254.

SUPPLEMENTARY INFORMATION:

Background on Viticultural Areas

TTB Authority

Section 105(e) of the Federal Alcohol Administration Act (the FAA Act, 27 U.S.C. 201 *et seq.*) requires that alcohol beverage labels provide consumers with adequate information regarding product identity and prohibits the use of misleading information on those labels. The FAA Act also authorizes the Secretary of the Treasury to issue regulations to carry out its provisions. The Alcohol and Tobacco Tax and Trade Bureau (TTB) administers these regulations.

Part 4 of the TTB regulations (27 CFR part 4) allows the establishment of definitive viticultural areas and the use of their names as appellations of origin on wine labels and in wine advertisements. Part 9 of the TTB regulations (27 CFR part 9) contains the list of approved viticultural areas.

Definition

Section 4.25(e)(1)(i) of the TTB regulations (27 CFR 4.25(e)(1)(i)) defines a viticultural area for American wine as a delimited grape-growing region distinguishable by geographical features, the boundaries of which have been recognized and defined in part 9 of the regulations. These designations allow vintners and consumers to attribute a given quality, reputation, or other characteristic of a wine made from grapes grown in an area to its geographical origin. The establishment of viticultural areas allows vintners to describe more accurately the origin of their wines to consumers and helps consumers to identify wines they may purchase. Establishment of a viticultural area is neither an approval nor an endorsement by TTB of the wine produced in that area.

Requirements

Section 4.25(e)(2) of the TTB regulations outlines the procedure for proposing an American viticultural area and provides that any interested party may petition TTB to establish a grape-growing region as a viticultural area. Section 9.3(b) of the TTB regulations requires the petition to include—

- Evidence that the proposed viticultural area is locally and/or nationally known by the name specified in the petition;
- Historical or current evidence that supports setting the boundary of the proposed viticultural area as the petition specifies;
- Evidence relating to the geographical features, such as climate, elevation, physical features, and soils that distinguish the proposed viticultural area from surrounding areas;
- A description of the specific boundary of the proposed viticultural area, based on features found on United States Geological Survey (USGS) maps; and
- A copy of the appropriate USGS map(s) with the proposed viticultural area's boundary prominently marked.

Wahluke Slope Petition

The Wahluke Slope Wine Grape Growers Association, represented by Alan J. Busacca, PhD, proposes the establishment of the 81,000-acre Wahluke Slope viticultural area. Located in Grant County in eastern Washington State, the proposed area is approximately 145 miles southeast of Seattle and immediately north of the Hanford Reservation of the United States Department of Energy (USDOE), as shown on the American Automobile Association (AAA) State Series map for Oregon and Washington, February 2003 edition. The proposed Wahluke Slope area is also entirely within the existing Columbia Valley viticultural area (27 CFR 9.74). The petition states there are currently 5,200 acres of vineyard land within the proposed area, as of the November 2004 petition date.

The petition lists the major distinguishing factors of the proposed Wahluke Slope viticultural area as including its single landform and geographic isolation, distinctive soil patterns, and unique climatic characteristics. The petition also explains how this combination of distinguishing factors creates a distinctive grape-growing region.

Name Evidence

The USGS quadrangle maps of Priest Rapids and Coyote Rapids label the region within the proposed viticultural area as Wahluke Slope. The AAA State Series map for Oregon and Washington, February 2003 edition, shows Wahluke Slope north of the Hanford Reservation. The 2002 edition of the DeLorme Washington Atlas and Gazetter, included in the petition, indicates Wahluke Slope in the region of the proposed viticultural area.

The 2002 Washington Wine Grape Acreage Survey, by the Washington Agricultural Statistics Service, identifies the Wahluke Slope area within the larger Columbia Valley viticultural area, according to documentation provided in the petition. Also, the April 19, 1999, edition headline of the ''Hanford Reach,'' a USDOE publication, stated that Secretary of Energy Bill Richardson proposed to preserve a portion of the Wahluke Slope area along the Columbia River. A Grant County Tourism Press Room release dated March 24, 2004, which was included with the petition, describes the scenery and recreational opportunities in the Wahluke Slope area.

Boundary Evidence

The Wahluke Slope sits on a mega alluvial plain, also known as an alluvial fan, the petition explains. The proposed boundary line encompasses the entire portion of the mega fan potentially available for vineyard development, including all land held in private ownership and small amounts of government-owned land, the petition adds. Also, according to the petition, the Wahluke Slope area is an isolated island of wine grape production, with no

known vineyards within five miles, in any direction, beyond the proposed boundary line.

Generally, lands to the east, south and west of the proposed Wahluke Slope area's boundary line are Federal-owned or State-owned property, according to the petition and USGS maps of the area. To the north, the Saddle Mountains flank the proposed area's 1,480-foot boundary line.

According to the petition, to the southeast of the proposed Wahluke Slope viticultural area, the land has a high water table, cold air pockets, and frost, which create an environment unsuitable for vineyard production. To the south of the proposed boundaries is the Hanford Reservation. The petition states that the classified activities and history of the reservation make it unsuitable for agricultural development. To the west of the Wahluke Slope area, and across the Columbia River, are steeply sloping, rugged canyons. The soils are shallow, stony, and unsuitable for any crop, as the petition explains and the USGS topographic maps confirm. Also, to the north, beyond the proposed area's 1,480-foot boundary line, the Saddle Mountains have high elevation bedrock slopes, no irrigation access, and non-agricultural soils.

The combination of terrain with unsuitable growing environments and government-owned lands surrounding the proposed Wahluke Slope viticultural area, in conjunction with the distinguishing viticultural factors of the area, makes the proposed boundary line the best and most appropriate for the proposed Wahluke Slope viticultural area, the petition emphasizes.

Distinguishing Features

The Wahluke Slope region is situated on the Columbia Plateau in eastern Washington, which is bordered by the Rocky Mountains on the north and east, the Blue Mountains to the south, and the Cascade Mountains to the west. The proposed Wahluke Slope viticultural area sits on the south-facing benchlands of the Saddle Mountains.

Topography

The proposed Wahluke Slope viticultural area's elevation varies from 425 feet along the Columbia River to 1,480 feet on the south slope of the Saddle Mountains, as shown on USGS maps and stated in the petition. Also, most of the proposed area's vineyards are between 425 feet and 1,000 feet in elevation.

The proposed Wahluke Slope viticultural area is geographically isolated from other wine production areas in the State of Washington, the petition explains. Wahluke Slope is immediately bounded by the bedrock ridge of the Saddle Mountains, the Columbia River, and U.S. national monument lands, providing isolation and a separate viticultural identity, according to the petition.

The proposed Wahluke Slope viticultural area, the petition explains, sits on a mega alluvial fan, a single landform geographical area, extending 15 miles in length. Other viticultural areas in Washington State, according to the petition, have more diverse and complex geographic areas, with the possible exception of the much smaller Red Mountain area (27 CFR 9.167).

The south-facing Wahluke Slope landform has relatively flat agricultural sites that allow for viticultural uniformity in plant vigor and ripening, the petition explains. Also, the mega fan eventually drops away several hundred feet on three sides, providing good air drainage from spring and fall freezes.

Soils

Ice-age events played an important role in the formation of soils in the proposed viticultural area, the petition explains. When the Lake Missoula glacial ice dam repeatedly failed, large water floods flowed across eastern Washington depositing gravel bars and fine-grained sandy and silty sediments. Winds reworked the glacial sediments to form dunes of sand and loess (the silty sediment accumulated from the fallout of dust). These sediments range in thickness from a few inches to many feet deep, the petition states. Soils of the proposed Wahluke Slope viticultural area have formed predominantly from deep wind-blown sand, averaging greater than 60 inches in depth, the petition explains. To a lesser extent, some soils have formed from the wind-blown sand or silty loess sediments of the giant glacial floods.

Wahluke Slope soils are distinctive by their uniformity over large areas, the petition explains. The Quincy-Burbank-Hezel soil series, which covers more than half the proposed viticultural area, encompasses a contiguous area of several square miles as documented in the Soil Survey of Grant County, Washington, Gentry, 1984, on map sheets 163, 164, and 169. The petition notes that this uniformity contrasts to the soil variability of some nearby regions, including the Red Mountain viticultural area and the Canoe Ridge area of the Horse Heaven Hills region. Other soils series within the proposed boundaries that are documented in the Soil Survey of Grant County include Sagemoor-Kennewick-Warden, Taunton-Timmerman-Quincy, Scoon-Taunton-Finley, and several others with small acreages.

Wahluke Slope soils are unique, the petition explains, with their smooth landform shape, shallow slope angle that averages less than 8 percent, and predominant south-facing orientation at the top of the flood mega fan. This smooth landform, the petition adds, results in consistent climate variability across the proposed viticultural area.

Climate

The petition uses Wahluke Slope area climatic statistics available from Washington's Public Agricultural Weather System (PAWS) Web site, accessed April 5, 2004. Information for the petition generally spans 10 years—1994 through 2003—as available, according to the petition.

Precipitation in the proposed Wahluke Slope viticultural area averages 5.9 inches annually, making it the driest in that region of east Washington, according to PAWS. Also, the area has the lowest harvest rainfall average for the weather stations compared. The viticultural advantages, the petition explains, include irrigation control during the growing season and low potential of harmful rainfall at harvest.

Pan evapotranspiration (Etp) in the Wahluke Slope area ranks first in the nine PAWS stations used. The petition explains that photosynthesis and transpiration, which are key factors in grape production, are the highest in the Wahluke Slope area as compared to other selected stations in Washington. Wahluke Slope averages 3,013 growing degree-day units annually. (During the growing season, one degree day accumulates for each degree Fahrenheit that a day's average temperature is above 50 degrees, which is the minimum temperature required for grapevine growth. See ''General Viticulture,'' by Albert J. Winkler, University of California Press, 1974.)

The Wahluke Slope area ranks third highest in mean maximum temperature, mean annual temperature, and solar radiation, according to PAWS data. The petition explains that these temperatures confirm Wahluke Slope as a grape-growing hot spot within Washington. Finally, Wahluke Slope is the third windiest site evaluated, which affects grape plant growth, causing shorter shoot length, smaller leaf size, and fewer and smaller grape clusters.

Boundary Description

See the narrative boundary description of the petitioned-for viticultural area in the proposed

regulatory text published at the end of this notice.

Maps

The petitioner provided the required maps, and we list them below in the proposed regulatory text.

Impact on Current Wine Labels

Part 4 of the TTB regulations prohibits any label reference on a wine that indicates or implies an origin other than the wine's true place of origin. If we establish this proposed viticultural area, its name, ''Wahluke Slope,'' will be recognized as a name of viticultural significance.

In addition, with the establishment of the Wahluke Slope viticultural area, the name ''Wahluke'' standing alone will be considered a term of viticultural significance because consumers and vintners could reasonably attribute the quality, reputation, or other characteristic of wine made from grapes grown in the proposed Wahluke Slope viticultural area to the name Wahluke itself. We note in this regard that information contained in the Geographic Names Information System maintained by the USGS, and a general search of relevant Internet Web sites, including the Wahluke School District, Wahluke High School, Wahluke Branch Canal and Wahluke Branch Ten Wasteway (canal), reveal that the name ''Wahluke'' is not used in many different geographic contexts throughout the United States but rather appears to apply in particular to the area in the State of Washington encompassed by the proposed Wahluke Slope viticultural area. Based on the evidence submitted, we find that ''Wahluke'' alone is locally and/or nationally known as referring to the area in the State of Washington encompassed by the proposed Wahluke Slope viticultural area. See 27 CFR 4.39(i)(3), which also provides that a name has viticultural significance when determined by a TTB officer.

Therefore, the proposed part 9 regulatory text set forth in this document specifies both ''Wahluke Slope'' and ''Wahluke'' as terms of viticultural significance for purposes of part 4 of the TTB regulations. If this proposed text is adopted as a final rule, wine bottlers using ''Wahluke Slope'' or ''Wahluke'' in a brand name, including a trademark, or in another label reference as to the origin of the wine, will have to ensure that the product is eligible to use ''Wahluke Slope'' or ''Wahluke'' as an appellation of origin.

For a wine to be eligible to use as an appellation of origin a viticultural area name or other term specified as being viticulturally significant in part 9 of the TTB regulations, at least 85 percent of the grapes used to make the wine must have been grown within the area represented by that name or other term and the wine must meet the other conditions listed in 27 CFR 4.25(a)(3). If the wine is not eligible to use as an appellation of origin a viticultural area name or other viticulturally significant term that appears in the brand name, then the label is not in compliance and the bottler must change the brand name and obtain approval of a new label. Similarly, if the viticultural area name or other viticulturally significant term appears in another reference on the label in a misleading manner, the bottler would have to obtain approval of a new label. Accordingly, if a new label or a previously approved label uses the name ''Wahluke Slope'' or ''Wahluke'' for a wine that does not meet the 85 percent standard, the new label will not be approved, and the previously approved label will be subject to revocation, upon the effective date of the approval of the Wahluke Slope viticultural area.

Different rules apply if a wine has a brand name containing a viticultural area name that was used as a brand name on a label approved before July 7, 1986. See 27 CFR 4.39(i)(2) for details.

Public Participation

Comments Invited

We invite comments from interested members of the public on whether we should establish the proposed viticultural area. We are also interested in receiving comments on the sufficiency and accuracy of the name, climatic, boundary and other required information submitted in support of the petition. In addition, we are interested in receiving comments on the proposal to identify ''Wahluke'' as a term of viticultural significance. Please provide any available specific information in support of your comments.

Because of the potential impact of the establishment of the proposed Wahluke Slope viticultural area on brand labels that include the words ''Wahluke Slope'' or the word ''Wahluke'' as discussed above under Impact on Current Wine Labels, we are particularly interested in comments regarding whether there will be a conflict between the proposed area name (including ''Wahluke'' alone) and currently used brand names. If a commenter believes that a conflict will arise, the comment should describe the nature of that conflict, including any anticipated negative economic impact that approval of the proposed viticultural area will have on an existing viticultural enterprise. We are also interested in receiving suggestions for ways to avoid conflicts, for example by adopting a modified or different name for the viticultural area.

Submitting Comments

Please submit your comments by the closing date shown above in this notice. Your comments must include this notice number and your name and mailing address. Your comments must be legible and written in language acceptable for public disclosure. We do not acknowledge receipt of comments, and we consider all comments as originals. You may submit comments in one of five ways:

- *Mail:* You may send written comments to TTB at the address listed in the **ADDRESSES** section.
- *Facsimile:* You may submit comments by facsimile transmission to 202–927–8525. Faxed comments must—
  (1) Be on 8.5- by 11-inch paper;
  (2) Contain a legible, written signature; and
  (3) Be no more than five pages long. This limitation assures electronic access to our equipment. We will not accept faxed comments that exceed five pages.
- *E-mail:* You may e-mail comments to *nprm@ttb.gov*. Comments transmitted by electronic mail must—
  (1) Contain your e-mail address;
  (2) Reference this notice number on the subject line; and
  (3) Be legible when printed on 8.5- by 11-inch paper.
- *Online form:* We provide a comment form with the online copy of this notice on our Web site at *http://www.ttb.gov/alcohol/rules/index.htm.* Select the ''Send comments via e-mail'' link under this notice number.
- *Federal e-rulemaking portal:* To submit comments to us via the Federal e-rulemaking portal, visit *http://www.regulations.gov* and follow the instructions for submitting comments.

You may also write to the Administrator before the comment closing date to ask for a public hearing. The Administrator reserves the right to determine, in light of all circumstances, whether to hold a public hearing.

Confidentiality

All submitted material is part of the public record and subject to disclosure. Do not enclose any material in your comments that you consider confidential or inappropriate for public disclosure.

Public Disclosure

You may view copies of this notice, the petition, the appropriate maps, and

any comments we receive by appointment at the TTB Library at 1310 G Street, NW., Washington, DC 20220. You may also obtain copies at 20 cents per 8.5- x 11-inch page. Contact our librarian at the above address or by telephone at 202–927–2400 to schedule an appointment or to request copies of comments.

For your convenience, we will post this notice and any comments we receive on this proposal on the TTB Web site. We may omit voluminous attachments or material that we consider unsuitable for posting. In all cases, the full comment will be available in the TTB Library. To access online copies of this notice and the posted comments, visit *http://www.ttb.gov/alcohol/rules/index.htm.* Select the ''View Comments'' link under this notice number to view the posted comments.

Regulatory Flexibility Act

We certify that this proposed regulation, if adopted, will not have a significant economic impact on a substantial number of small entities. The proposed regulation imposes no new reporting, recordkeeping, or other administrative requirement. Any benefit derived from the use of a viticultural area name would be the result of a proprietor's efforts and consumer acceptance of wines from that area. Therefore, no regulatory flexibility analysis is required.

Executive Order 12866

This proposed rule is not a significant regulatory action as defined by Executive Order 12866, 58 FR 51735. Therefore, it requires no regulatory assessment.

Drafting Information

N.A. Sutton of the Regulations and Procedures Division drafted this notice.

List of Subjects in 27 CFR Part 9

Wine.

Proposed Regulatory Amendment

For the reasons discussed in the preamble, we propose to amend 27 CFR, chapter 1, part 9, Code of Federal Regulations, as follows:

PART 9—AMERICAN VITICULTURAL AREAS

1. The authority citation for part 9 continues to read as follows:

Authority: 27 U.S.C. 205.

2. Amend subpart C by adding § 9.____ to read as follows:

Subpart C—Approved American Viticultural Areas

§ 9.____ Wahluke Slope.

(a) *Name.* The name of the viticultural area described in this section is ''Wahluke Slope''. For purposes of part 4 of this chapter, ''Wahluke Slope'' and ''Wahluke'' are terms of viticultural significance.

(b) *Approved Maps.* The appropriate maps for determining the boundaries of the Wahluke Slope viticultural area are eight United States Geological Survey (USGS) 1:250,000 scale, topographic maps. They are titled:

(1) Beverly Quadrangle, Washington, 1965;

(2) Beverly SE Quadrangle, Washington—Grant Co., 1965;

(3) Smyrna Quadrangle, Washington—Grant Co., Provisional Edition 1986;

(4) Wahatis Peak Quadrangle, Washington—Grant Co., Provisional Edition 1986;

(5) Coyote Rapids Quadrangle, Washington, Provisional Edition 1986;

(6) Vernita Bridge Quadrangle, Washington, Provisional Edition 1986;

(7) Priest Rapids NE Quadrangle, Washington, Provisional Edition 1986; and

(8) Priest Rapids Quadrangle, Washington, 1948; photo revised 1978.

(c) *Boundary.* The Wahluke Slope viticultural area is located in Grant County, Washington. The boundary of the Wahluke Slope viticultural area is as described below:

(1) The beginning point is at the northwest corner of the proposed viticultural area where the east bank of the Columbia River intersects with the north boundary line of section 22, T15N/R23E, on the Beverly map;

(2) From the beginning point proceed straight east 1.5 miles to the intersection of the section 23 north boundary line and the 1,480-foot elevation line, T15N/R23E, Beverly map; then

(3) Proceed generally east along the meandering 1,480-foot elevation line, pass the Beverly map, continue across the Beverly SE map and the Smyrna map, and pass onto the Wahatis Peak map to the intersection of the 1,480-foot elevation line and the eastern boundary line of section 15, which forms a portion of the boundary line of the Hanford Site, T15N/R26E, Wahatis Peak map; then

(4) Proceed generally southwest along the Hanford Site boundary in a series of 90 degree angles, crossing a portion of section 36, T15N/R25E, on the Coyote Rapids map, continuing across the Vernita Bridge map, and passing onto the Priest Rapids NE map, and continue to the intersection of the Hanford Site Boundary and the north bank of the Columbia River, section 10, T13N/R24E, Priest Rapids NE map; then

(5) Proceed generally west along the north bank of the Columbia River, crossing onto the Priest Rapids map and, turning north-northwest, continue along the river bank and, crossing onto the Beverly map, return to the beginning point at the intersection of the east bank of the Columbia River and the north boundary line of section 22, T15N/R23E, Beverly map.

Signed: April 27, 2005.

John J. Manfreda,

Administrator.

[FR Doc. 05–10009 Filed 5–18–05; 8:45 am]

BILLING CODE 4810–31–P

DEPARTMENT OF THE TREASURY

Alcohol and Tobacco Tax and Trade Bureau

27 CFR Part 9

[Notice No. 45]

RIN 1513–AB02

Proposed Establishment of the San Antonio Valley Viticultural Area (2004R–599P)

AGENCY: Alcohol and Tobacco Tax and Trade Bureau, Treasury.

ACTION: Notice of proposed rulemaking.

SUMMARY: The Alcohol and Tobacco Tax and Trade Bureau proposes to establish the ''San Antonio Valley'' viticultural area in southwest Monterey County, California, within the existing Central Coast viticultural area. We designate viticultural areas to allow vintners to better describe the origin of their wines and allow consumers to better identify wines they may purchase. We invite comments on this proposed addition to our regulations.

DATES: We must receive written comments on or before July 18, 2005.

ADDRESSES: You may send comments to any of the following addresses:

- Chief, Regulations and Procedures Division, Alcohol and Tobacco Tax and Trade Bureau, Attn: Notice No. 45, P.O. Box 14412, Washington, DC 20044–4412.
- 202–927–8525 (facsimile).
- *nprm@ttb.gov* (e-mail).
- *http://www.ttb.gov/alcohol/rules/index.htm.* An online comment form is posted with this notice on our Web site.
- *http://www.regulations.gov* (Federal e-rulemaking portal; follow instructions for submitting comments).

You may view copies of this notice, the petition, the appropriate maps, and

any comments we receive about this proposal by appointment at the TTB Library, 1310 G Street, NW., Washington, DC 20220. To make an appointment, call 202–927–2400. You may also access copies of the notice and comments online at *http://www.ttb.gov/alcohol/rules/index.htm.*

See the Public Participation section of this notice for specific instructions and requirements for submitting comments, and for information on how to request a public hearing.

FOR FURTHER INFORMATION CONTACT: N.A. Sutton, Regulations and Procedures Division, Alcohol and Tobacco Tax and Trade Bureau, 925 Lakeville Street, No. 158, Petaluma, California 94952; telephone 415–271–1254.

SUPPLEMENTARY INFORMATION:

Background on Viticultural Areas

TTB Authority

Section 105(e) of the Federal Alcohol Administration Act (the FAA Act, 27 U.S.C. 201 *et seq.*) requires that alcohol beverage labels provide consumers with adequate information regarding product identity and prohibits the use of misleading information on those labels. The FAA Act also authorizes the Secretary of the Treasury to issue regulations to carry out its provisions. The Alcohol and Tobacco Tax and Trade Bureau (TTB) administers these regulations.

Part 4 of the TTB regulations (27 CFR part 4) allows the establishment of definitive viticultural areas and the use of their names as appellations of origin on wine labels and in wine advertisements. Part 9 of the TTB regulations (27 CFR part 9) contains the list of approved viticultural areas.

Definition

Section 4.25(e)(1)(i) of the TTB regulations (27 CFR 4.25(e)(1)(i)) defines a viticultural area for American wine as a delimited grape-growing region distinguishable by geographical features, the boundaries of which have been recognized and defined in part 9 of the regulations. These designations allow vintners and consumers to attribute a given quality, reputation, or other characteristic of a wine made from grapes grown in an area to its geographical origin. The establishment of viticultural areas allows vintners to describe more accurately the origin of their wines to consumers and helps consumers to identify wines they may purchase. Establishment of a viticultural area is neither an approval nor an endorsement by TTB of the wine produced in that area.

Requirements

Section 4.25(e)(2) of the TTB regulations outlines the procedure for proposing an American viticultural area and provides that any interested party may petition TTB to establish a grape-growing region as a viticultural area. Section 9.3(b) of the TTB regulations requires the petition to include—

- Evidence that the proposed viticultural area is locally and/or nationally known by the name specified in the petition;
- Historical or current evidence that supports setting the boundary of the proposed viticultural area as the petition specifies;
- Evidence relating to the geographical features, such as climate, elevation, physical features, and soils, that distinguish the proposed viticultural area from surrounding areas;
- A description of the specific boundary of the proposed viticultural area, based on features shown on United States Geological Survey (USGS) maps; and
- A copy of the appropriate USGS map(s) with the proposed viticultural area's boundary prominently marked.

San Antonio Valley Petition

Paul Getzelman, Paula Getzelman, and Steve Cobb of Lockwood, California, have petitioned TTB to establish the ''San Antonio Valley'' viticultural area in southwest Monterey County, California, in a valley situated in the Santa Lucia mountain range. The proposed area is entirely within the existing multi-county Central Coast viticultural area (27 CFR 9.75). According to the petitioners, there are approximately 235 square miles, or 150,400 acres of land, within the proposed San Antonio Valley viticultural area. Over 700 of these acres are planted to vines.

Name Evidence

According to the petitioners, the name ''San Antonio Valley'' dates back to 1771 when a small party of Spanish missionaries headed by Father Junipero Serra entered the oak-mantled valley in what was to become southern Monterey County. Near the river the padre had named ''El Rio de San Antonio,'' they established a mission and named it ''San Antonio de Padua'' in honor of Saint Anthony of Padua. They later relocated the mission a couple of miles north, at the confluence of the San Miquel and San Antonio Rivers, because it would be a good site for a winery.

The petitioners cite the following reference sources as evidence of the historical and current usage of the name ''San Antonio Valley'':

- ''Memories of the San Antonio Valley,'' by Rachel Gillett, San Antonio Valley Historical Society, 1990. Gillet refers repeatedly to the proposed area as ''San Antonio Valley.'' She states that the township of San Antonio was surveyed in 1865 near the El Camino Real or King's highway (currently Jolon Road). She further notes that a San Antonio post office was operated in the township from 1867 to 1887.
- ''California Place Names; The Origin and Etymology of Current Geographical Names,'' by Erwin G. Gudde and William Bright, University of California Press, Fourth Edition. The authors note that the name San Antonio, which appears in the titles of many land grants and claims, has survived in a number of places, including in the names of the San Antonio River, San Antonio Mission, San Antonio Creek, and San Antonio Valley.
- ''Monterey County Place Names, a Geographical Dictionary,'' by Donald Thomas Clark, Kestrel Press, 1991. The author writes of the San Antonio Valley, ''this is the valley through which the San Antonio River flows.''
- Pelican Network Guide, an Internet travel site, states the following about the San Antonio Valley: ''Nearly secret, San Antonio Valley is an intriguing short range destination. About two and a half hours from Silicon Valley, yet far more remote in history, it provides environmental, literary, cultural, and historical rewards. San Antonio Valley is the setting for John Steinbeck's ''To an Unknown God,'' an early novel of his spiritual and ecological themes.'' (See *http://www.pelicannetwork.net/getaways.sanantonio.valley.htm.*)

The petitioners state that although the valley has been known by various names in the past 300 years, often due to changes in ownership under the Spanish land grant system, the name San Antonio Valley has endured. According to the petitioners, local residents have long known the area as San Antonio Valley. The name ''San Antonio'' is used throughout the area—the San Antonio Union School, San Antonio Reservoir, and San Antonio River can all be found on the USGS map for Williams Hill, California, submitted by the petitioners. The petitioners note that while the southern portion of the area is also known as Lockwood Valley, the name ''Lockwood'' is most accurately applied to a township in the southern portion of the San Antonio Valley.

Boundary Evidence

The boundaries for the proposed area are the natural geographical boundaries of the San Antonio Valley. The

proposed viticultural area, which includes approximately 150,400 acres of flat land and gently rolling hills, extends up the surrounding hillsides to an elevation of approximately 2,200 feet. This valley, formed by the watershed of the San Antonio River, is situated in the Santa Lucia mountain range between the Pacific coast and the Salinas Valley. The San Antonio River flows across the Santa Lucia range in a southeasterly direction, then turns to the east and flows into the Salinas River. A dam built in the 1950s on the river near the San Luis Obispo County line forms San Antonio Reservoir.

The boundaries of the Fort Hunter Liggett Military Reservation lie partially within the proposed area. While the fort is currently under the jurisdiction of the United States Government, the petitioners note that it could be sold in the future. Because the reservation is contiguous with the remainder of the proposed area and shares its growing conditions, the petitioners state it can be considered equally suitable for vineyards.

According to the petitioners, the San Antonio Valley's basin shape, elevation, climate, and soils contribute to significantly different growing conditions from those found in the adjoining areas within the large Central Coast viticultural area. These growing conditions are described in detail in the following section. The petitioners note that the Spanish missionaries, who planted grape vines to provide sacramental wine for the Mission, were the first to recognize the valley's unique growing conditions. The Pelican Network Guide states, ''The Spaniards, who liked the site for wine making because of its soil and climate, were right on the money.''

Distinguishing Features

Elevation

The elevation of the proposed San Antonio Valley viticultural area ranges from 850 feet to approximately 2,200 feet. It is surrounded by the higher Santa Lucia range (greater than 2,200 feet) to the west and south and a lower ridge (approximately 1,500 feet) to the north and east. According to the petitioners, the shape and elevation of the area results in higher daytime and lower nighttime temperatures than in neighboring areas with lower elevations, such as the Monterey viticultural area where the elevation ranges from 50 feet to 540 feet. The petitioners state that the daily heating-cooling cycle produced by the proposed area's higher elevation allows grapes to achieve full, rich fruit flavor and color while retaining a crisp acidity.

Soils

According to the petitioners, the San Antonio Valley has a distinctive soil profile comprised of nearly 40 different soil series, the majority of them alluvial in nature. The remaining soils were formed on uplands in material generally weathered from sandstone and shale. Current vineyards are planted on flat to moderately sloping terrain. The principle soil series are: Arbuckle gravelly loam, Chamise shaly loam, Lockwood loam and shaly loam, Placentia sandy loam, Placentia-Arbuckle complex, Rincon clay loam, Nacimiento silty clay loam, and Pinnacles coarse sandy loam. As supporting evidence, the petitioners submitted soil data for the proposed area from ''Soil Survey of Monterey County, California,'' published by the Soil Conservation Service of the U.S. Department of Agriculture.

The petitioners note that these soils are distinctive from the soils of neighboring areas of Monterey County. In the San Bernabe viticultural area (27 CFR 9,171), for example, the soils, remnants of ancient sand dunes, are mostly of the eolian type. The adjacent Hames Valley viticultural area (27 CFR 9.147) has a very homogeneous soil profile with 75 percent of the soils derived from the Lockwood series. In contrast, the San Antonio Valley has a much more varied soil profile with the majority of the soil series being alluvial in nature.

Climate

The petitioners state that the San Antonio Valley's climate is much less affected by marine air than other areas of the Central Coast. A stable layer of marine air typically dominates coastal California weather, causing higher humidity, cooler maximum temperatures, and warmer minimum temperatures. This effect occurs with greater duration in valleys close to the coast, such as Carmel Valley, Edna Valley, Santa Ynez Valley, and lower Salinas Valley. Its influence decreases as one travels inland, especially in the upper areas of the Salinas Valley. According to the petitioners, the inland position of the San Antonio Valley and its basin shape act to block the intrusion of this marine air. Only when the upper level of atmospheric pressure deepens the layer of marine air to greater than its typical depth of 1,000–1,500 feet does the San Antonio Valley experience a marine influence. This lack of a marine influence creates a unique microclimate for the area, with drier, hotter days in summer and cooler nights in the spring and fall.

As evidence of this climatic distinction, the petitioners have submitted temperature comparisons based on data from the National Weather Center. A comparison of growing season average monthly temperatures between San Antonio Valley and nearby areas (Carmel Valley, Gonzales, Arroyo Seco, King City, and Paso Robles) shows that San Antonio Valley is considerably cooler than the other areas during April. The petitioner states that this is due to the San Antonio Valley's basin shape and drier conditions, factors they state also cause the San Antonio Valley to experience more frequent frost episodes. However, from June through September the proposed area averages warmer temperatures than the other areas, with the exception of Paso Robles, an area further inland than San Antonio Valley.

The petitioners also submitted a comparison of both total growing season degree days and monthly degree days for the same areas. (During the growing season, one degree day accumulates for each degree Fahrenheit that a day's average temperature is above 50 degrees, which is the minimum temperature required for grapevine growth. See ''General Viticulture,'' by Albert J. Winkler, University of California Press, 1974.) These comparisons show that San Antonio Valley typically accumulates above 3,000 degree days for the total growing season. Paso Robles accumulates 3,600 degree days for the same period, while Carmel Valley, Gonzales, and Arroyo Seco all accumulate fewer than 2,400 degree days each. King City accumulates roughly as many degrees days for the growing season as San Antonio Valley. However, the monthly comparison shows that in King City the degree days accumulate steadily through the months, while in the San Antonio Valley the increase and decrease in degree days is much more dramatic, with most of the increase occurring during the summer months.

In addition to the temperature comparisons described above, the petitioners also submitted a microclimate comparison of the San Antonio Valley and two adjacent viticultural areas, Paso Robles and Hames Valley (27 CFR 9.84 and 9.147, respectively). The data covered a two-week period from September 16–29, 2003, and was collected at sites located at Hunter Liggett Military Reservation within the proposed area, at Bradley in the Hames Valley area, and at the Paso Robles Airport within the Paso Robles area. The petitioners submitted the data

in the form of graphs exhibiting differences in temperature, dew point, humidity, and wind speeds between the three areas.

According to the graphs, wind speeds for the period were significantly lower in the San Antonio Valley than in the Hames Valley or Paso Robles. The petitioners state that this is because the topography of the proposed area blocks the strongest daily afternoon winds created by marine influence. Dew points for the period were shown to be at least 10 degrees lower in the San Antonio Valley than in the other areas, reflecting the proposed area's lower humidity. The temperature data, according to the petitioners, shows that the San Antonio Valley also has a markedly different temperature profile from either the Hames Valley or Paso Robles. Generally, this data shows that the proposed area is less affected by marine air intrusions. The petitioners noted that during times of marine influence, the San Antonio Valley has a much greater temperature variance than the other areas where the marine air moderates the temperatures. On the other hand, they note that on days with little marine influence, the proposed area experiences less temperature variation than the other areas.

The petitioners conclude that their evidence shows the climate in the proposed San Antonio Valley viticultural area to be significantly different in regard to temperature, wind, humidity, and degree day accumulations from surrounding viticultural areas. These differences, they contend, are a reflection of the area's basin geography, making the grape growing environment in the San Antonio Valley unique relative to other Central Coast viticultural areas.

Boundary Description

See the narrative boundary description of the petitioned-for viticultural area in the proposed regulatory text published at the end of this notice.

Maps

The petitioners provided the required maps, and we list them below in the proposed regulatory text.

Impact on Current Wine Labels

Part 4 of the TTB regulations prohibits any label reference on a wine that indicates or implies an origin other than the wine's true place of origin. If we establish this proposed viticultural area, its name, ''San Antonio Valley,'' will be recognized as a name of viticultural significance. Consequently, wine bottlers using ''San Antonio Valley'' in a brand name, including a trademark, or in another label reference as to the origin of the wine, will have to ensure that the product is eligible to use the viticultural area's name as an appellation of origin. On the other hand, we do not believe that any single part of the proposed viticultural name standing alone, such as ''San Antonio,'' would have viticultural significance if the new area is established. Accordingly, the proposed part 9 regulatory text set forth in this document specifies only the full ''San Antonio Valley'' name as a term of viticultural significance for purposes of part 4 of the TTB regulations.

For a wine to be eligible to use as an appellation of origin the name of a viticultural area specified in part 9 of the TTB regulations, at least 85 percent of the grapes used to make the wine must have been grown within the area represented by that name, and the wine must meet the other conditions listed in 27 CFR 4.25(e)(3). If the wine is not eligible to use the viticultural area name as an appellation of origin and that name appears in the brand name, then the label is not in compliance and the bottler must change the brand name and obtain approval of a new label. Similarly, if the viticultural area name appears in another reference on the label in a misleading manner, the bottler would have to obtain approval of a new label. Accordingly, if a new label or a previously approved label uses the name ''San Antonio Valley'' for a wine that does not meet the 85 percent standard, the new label will not be approved, and the previously approved label will be subject to revocation, upon the effective date of the approval of the San Antonio Valley viticultural area.

Different rules apply if a wine has a brand name containing a viticultural area name that was used as a brand name on a label approved before July 7, 1986. See 27 CFR 4.39(i)(2) for details.

Public Participation

Comments Invited

We invite comments from interested members of the public on whether we should establish the proposed viticultural area. We are also interested in receiving comments on the sufficiency and accuracy of the name, boundary, climatic, and other required information submitted in support of the petition. Please provide any available specific information in support of your comments.

Because of the potential impact of the establishment of the proposed San Antonio Valley viticultural area on brand labels that include the words ''San Antonio Valley'' as discussed above under ''Impact on Current Wine Labels,'' we are particularly interested in comments regarding whether there will be a conflict between the proposed area name and currently used brand names. If a commenter believes that a conflict will arise, the comment should describe the nature of that conflict, including any negative economic impact that approval of the proposed viticultural area will have on an existing viticultural enterprise. We are also interested in receiving suggestions for ways to avoid any conflicts, for example by adopting a modified or different name for the viticultural area.

Although TTB believes that only the full ''San Antonio Valley'' name should be considered to have viticultural significance upon establishment of the proposed new viticultural area, we also invite comments from those who believe that ''San Antonio'' standing alone would have viticultural significance upon establishment of the area. Comments in this regard should include documentation or other information supporting the conclusion that use of ''San Antonio'' on a wine label could cause consumers and vintners to attribute to the wine in question the quality, reputation, or other characteristic of wine made from grapes grown in the proposed San Antonio Valley viticultural area.

Submitting Comments

Please submit your comments by the closing date shown above in this notice. Your comments must include this notice number and your name and mailing address. Your comments must be legible and written in language acceptable for public disclosure. We do not acknowledge receipt of comments, and we consider all comments as originals. You may submit comments in one of five ways.

- *Mail:* You may send written comments to TTB at the address listed in the **ADDRESSES** section.
- *Facsimile:* You may submit comments by facsimile transmission to 202–927–8525. Faxed comments must—

(1) Be on 8.5- by 11-inch paper;

(2) Contain a legible, written signature; and

(3) Be no more than five pages long. This limitation assures electronic access to our equipment. We will not accept faxed comments that exceed five pages.

- *E-mail:* You may e-mail comments to *nprm@ttb.gov.* Comments transmitted by electronic mail must—

(1) Contain your e-mail address;

(2) Reference this notice number on the subject line; and

(3) Be legible when printed on 8.5- by 11-inch paper.

• *Online form:* We provide a comment form with the online copy of this notice on our Web site at *http://www.ttb.gov/alcohol/rules/index.htm.* Select the ''Send comments via e-mail'' link under this notice number.

• *Federal e-Rulemaking Portal:* To submit comments to us via the Federal e-rulemaking portal, visit *http://www.regulations.gov* and follow the instructions for submitting comments.

You may also write to the Administrator before the comment closing date to ask for a public hearing. The Administrator reserves the right to determine, in light of all circumstances, whether to hold a public hearing.

Confidentiality

All submitted material is part of the public record and subject to disclosure. Do not enclose any material in your comments that you consider confidential or inappropriate for public disclosure.

Public Disclosure

You may view copies of this notice, the petition, the appropriate maps, and any comments we receive by appointment at the TTB Library at 1310 G Street, NW., Washington, DC 20220. You may also obtain copies at 20 cents per 8.5 x 11-inch page. Contact our librarian at the above address or telephone 202–927–2400 to schedule an appointment or to request copies of comments.

For your convenience, we will post this notice and any comments we receive on this proposal on the TTB Web site. We may omit voluminous attachments or material that we consider unsuitable for posting. In all cases, the full comment will be available in the TTB Library. To access the online copy of this notice and the submitted comments, visit *http://www.ttb.gov/alcohol/rules/index.htm.* Select the ''View Comments'' link under this notice number to view the posted comments.

Regulatory Flexibility Act

We certify that this proposed regulation, if adopted, would not have a significant economic impact on a substantial number of small entities. The proposed regulation imposes no new reporting, recordkeeping, or other administrative requirement. Any benefit derived from the use of a viticultural area name would be the result of a proprietor's efforts and consumer acceptance of wines from that area. Therefore, no regulatory flexibility analysis is required.

Executive Order 12866

This proposed rule is not a significant regulatory action as defined by Executive Order 12866, 58 FR 51735. Therefore, it requires no regulatory assessment.

Drafting Information

Jennifer Berry of the Regulations and Procedures Division drafted this notice.

List of Subjects in 27 CFR Part 9

Wine.

Proposed Regulatory Amendment

For the reasons discussed in the preamble, we propose to amend title 27, chapter 1, part 9, Code of Federal Regulations, as follows:

PART 9—AMERICAN VITICULTURAL AREAS

1. The authority citation for part 9 continues to read as follows:

Authority: 27 U.S.C. 205.

2. Amend subpart C by adding § 9.___ to read as follows:

Subpart C—Approved American Viticultural Areas

§ 9.___ San Antonio Valley.

(a) *Name.* The name of the viticultural area described in this section is ''San Antonio Valley.'' For purposes of part 4 of this chapter, ''San Antonio Valley'' is a term of viticultural significance.

(b) *Approved Maps.* The appropriate maps for determining the boundaries of the San Antonio Valley viticultural area are 10 United States Geological Survey 1:24,000 scale topographic maps. They are titled:

(1) Hames Valley, California, 1949, photorevised 1978;

(2) Tierra Redonda Mountain, California, 1949, photorevised 1979;

(3) Bradley, California, 1949, photorevised 1979;

(4) Bryson, California, 1949, photorevised 1979;

(5) Williams Hill, California, 1949, photorevised 1979;

(6) Jolon, California, 1949;

(7) Alder Peak, California, 1995;

(8) Bear Canyon, California, 1949, photoinspected 1972;

(9) Cosio Knob, California, 1949, photorevised 1984; and

(10) Espinosa Canyon, California, 1949, photorevised 1979.

(c) *Boundary.* The San Antonio Valley viticultural area is located in Monterey County, California. The boundary of the San Antonio Valley viticultural area is as described below:

(1) On the Hames Valley map, begin at the southeast corner of section 14, T23S, R9E; then

(2) Proceed southeast in a straight line for 4 miles across sections 24 and 25, T23S, R9E, and sections 30, 31, and 32, T23S, R10E, and section 5, T24S, R10E, to the southeast corner of section 5, on the Tierra Redonda Mountain map; then

(3) Continue southeast in a straight line for approximately 3.25 miles through sections 9, 16, 15, and 22, T24S, R10E, to the mid-point of the eastern boundary of section 22 on the Bradley map; then

(4) Proceed straight south along the eastern boundary line of sections 22, 27, and 34, T24S, R10E, to the Monterey-San Luis Obispo County line; then

(5) Follow the Monterey-San Luis Obispo County line west, back onto the Tierra Redonda Mountain map, to the southwest corner of section 34, T24S, R9E; then

(6) Proceed northwest in a straight line for approximately 17.25 miles, crossing sections 33, 32, 29, 30, and 19, T24S, R9E, and sections 24, 13, 14, 10, 9, and 4, T24S, R8E, on the Bryson map, section 5, T24S, R8E in the southwest corner of the Williams Hill map, section 32, T23S, and sections 23, 22, 15, and 16, T23S, R7E, on the Jolon map, to an 1,890-foot peak located approximately 2,100 feet west of section 8, T23S, R7E; then

(7) Continue northwest in a straight line for approximately 9.5 miles, crossing the Alder Peak map between Milpitas Grant and Stony Valley, and sections 9, 4, and 5, T22S, R6E, on the Bear Canyon map, to a 2,713-foot peak located in section 5, T22S, R6E; then

(8) Proceed east-northeast in a straight line for approximately 3.75 miles, passing onto the Hunter Liggett Military Reservation and crossing the San Antonio River, to a 2,449-foot peak on the Military Reservation; then

(9) Proceed northeast in a straight line for approximately 1.5 miles, crossing Mission Creek, across sections 30 and 29, T21S, R7E, on the Cosio Knob map to the 2,530-foot peak of Cosio Knob; then

(10) From Cosio Knob, proceed east-southeast in a straight line for approximately 8.5 miles across sections 29, 28, 27, 26, 35, and 36, T21S, R7E, sections 31 and 32, T21S, R8E, and sections 5, 4, 3, and 2, T22S, R8E, on the Espinosa Canyon map, to a 1,811-foot peak located in section 2; then

(11) Proceed southeast in a straight line for 10.25 miles across sections 2, 11, 12, and 13, T22S, R8E, and sections 18 and 19, T22S, R9E, on the Espinosa Canyon map, sections 19, 30, 29, 32, and 33, T22S, R9E, on the northwest corner of the Williams Hills map, sections 4, 3, 10, 11, and 14, T23S, R9E, on the Hames Valley map, to the

beginning point at the southeast corner of section 14, T23S, R9E.

Signed: April 26, 2005.

John J. Manfreda,

Administrator.

[FR Doc. 05–10008 Filed 5–18–05; 8:45 am]

BILLING CODE 4810–31–P

DEPARTMENT OF THE TREASURY

Alcohol and Tobacco Tax and Trade Bureau

27 CFR Part 9

RIN 1513–AA55

[Notice No. 44]

Proposed Expansion of San Francisco Bay and Central Coast Viticultural Areas (2002R–202P)

AGENCY: Alcohol and Tobacco Tax and Trade Bureau, Treasury.

ACTION: Notice of proposed rulemaking.

SUMMARY: The Alcohol and Tobacco Tax and Trade Bureau proposes to amend its regulations to expand by approximately 20,000 acres the San Francisco Bay viticultural area and the Central Coast viticultural area in California to match the proposed boundary of an expanded Livermore Valley viticultural area. We designate viticultural areas to allow bottlers to better describe the origin of wines and allow consumers to better identify the wines they may purchase. We invite comments on this proposed amendment to our regulations.

DATES: We must receive written comments on or before July 18, 2005.

ADDRESSES: You may send comments to any of the following addresses:

- Chief, Regulations and Procedures Division, Alcohol and Tobacco Tax and Trade Bureau, Attn: Notice No. 44, P.O. Box 14412, Washington, DC 20044–4412.
- 202–927–8525 (facsimile).
- *nprm@ttb.gov* (e-mail).
- *http://www.ttb.gov/alcohol/rules/index.htm.* An online comment form is posted with this notice on our Web site.
- *http://www.regulations.gov* (Federal e-rulemaking portal; follow instructions for submitting comments).

You may view copies of this notice, the petition, the appropriate maps, and any comments we receive about this notice by appointment at the Alcohol and Tobacco Tax and Trade Bureau Library, 1310 G Street, NW., Washington, DC 20220. To make an appointment, call 202–927–2400. You may also access copies of the notice and comments online at *http://www.ttb.gov/alcohol/rules/index.htm.*

See the Public Participation section of this notice for specific instructions and requirements for submitting comments, and for information on how to request a public hearing.

FOR FURTHER INFORMATION CONTACT: N.A. Sutton, Regulations and Procedures Division, Alcohol and Tobacco Tax and Trade Bureau, 925 Lakeville St., No. 158, Petaluma, California 94952; telephone 415–271–1254.

SUPPLEMENTARY INFORMATION:

Background on Viticultural Areas

TTB Authority

Section 105(e) of the Federal Alcohol Administration Act (the FAA Act, 27 U.S.C. 201 *et seq.*) requires that alcohol beverage labels provide the consumer with adequate information regarding a product's identity and prohibits the use of misleading information on such labels. The FAA Act also authorizes the Secretary of the Treasury to issue regulations to carry out its provisions. The Alcohol and Tobacco Tax and Trade Bureau (TTB) administers these regulations.

Part 4 of the TTB regulations (27 CFR part 4) allows the establishment of definitive viticultural areas and the use of their names as appellations of origin on wine labels and in wine advertisements. Part 9 of the TTB regulations (27 CFR part 9) contains the list of approved viticultural areas.

Definition

Section 4.25(e)(1)(i) of the TTB regulations (27 CFR 4.25(e)(1)(i)) defines a viticultural area for American wine as a delimited grape-growing region distinguishable by geographical features, the boundaries of which have been recognized and defined in part 9 of the regulations. These designations allow vintners and consumers to attribute a given quality, reputation, or other characteristic of a wine made from grapes grown in an area to its geographic origin. The establishment of viticultural areas allows vintners to describe more accurately the origin of their wines to consumers and helps consumers to identify wines they may purchase. Establishment of a viticultural area is neither an approval nor an endorsement by TTB of the wine produced in that area.

Requirements

Section 4.25(e)(2) of the TTB regulations outlines the procedure for proposing an American viticultural area and provides that any interested party may petition TTB to establish a grape-growing region as a viticultural area. Petitioners may use the same procedure to request changes involving existing viticultural areas. Section 9.3(b) of the TTB regulations requires the petition to include—

- Evidence that the proposed viticultural area is locally and/or nationally known by the name specified in the petition;
- Historical or current evidence that supports setting the boundary of the proposed viticultural area as the petition specifies;
- Evidence relating to the geographical features, such as climate, soils, elevation, and physical features, that distinguish the proposed viticultural area from surrounding areas;
- A description of the specific boundary of the proposed viticultural area, based on features found on United States Geological Survey (USGS) maps; and
- A copy of the appropriate USGS map(s) with the proposed viticultural area's boundary prominently marked.

San Francisco Bay and Central Coast Expansion Petition

TTB received a petition from the president of the Livermore Valley Winegrowers Association proposing to expand the existing San Francisco Bay viticultural area (27 CFR 9.157) and the existing Central Coast viticultural area (27 CFR 9.75). The Association made this request in conjunction with, and as a consequence of, its proposed expansion of the Livermore Valley viticultural area (27 CFR 9.46), which is the subject of another document published in this issue of the **Federal Register**. The petitioner, Livermore Valley Winegrowers Association, represents most of the vineyards and wineries impacted by this expansion.

The Livermore Valley viticultural area is entirely within the San Francisco Bay viticultural area, which is, in turn, entirely within the Central Coast viticultural area. To retain this configuration, the proposed Livermore Valley expansion would require the minor expansions of the San Francisco Bay and Central Coast viticultural areas proposed in this document.

Below, we summarize the evidence presented in the petition to justify the expansion of the San Francisco Bay and Central Coast viticultural areas.

Rationale for the Proposed Expansion

As the petitioner notes, in the years since the Bureau of Alcohol, Tobacco and Firearms (ATF), TTB's predecessor agency, established the current Livermore Valley viticultural area in 1982, ATF also established both the Central Coast and San Francisco Bay viticultural areas. Both of these

viticultural areas currently encompass the Livermore Valley viticultural area in its entirety and incorporate some of the Livermore Valley area's eastern boundary line as their own boundaries. (See: Livermore Valley Viticultural Area, Treasury Decision (T.D.) ATF–112, 47 FR 38520, Sept. 1, 1982; Central Coast Viticultural Area, T.D. ATF–216, 50 FR 43130, Oct. 24, 1985, as amended by T.D. ATF–407 64 FR 3023, Jan. 20, 1999; and San Francisco Bay Viticultural Area, T.D. ATF–407, 64 FR 3015, Jan. 20, 1999.)

When ATF established the San Francisco Bay viticultural area and amended the Central Coast viticultural area in 1999, no changes were made to the established boundary line of the Livermore Valley viticultural area. As a result, the Central Coast viticultural area and the San Francisco Bay viticultural area currently share a common boundary line in Alameda County, while the Livermore Valley viticultural area does not—to the detriment of all three viticultural areas, according to the petitioner.

Currently, the central portion of the Livermore Valley viticultural area's eastern boundary line sits to the west of the current San Francisco Bay and Central Coast viticultural areas' eastern boundary line. This portion of the Livermore Valley boundary line is west of the Diablo Range foothills, as noted on the USGS Altamont, Byron Hot Springs, and Mendenhall Springs Quadrangle maps. The common eastern boundary line of the San Francisco Bay and Central Coast viticultural areas is further east, along the western foothills and mountains of the Diablo Range, as defined on the USGS Midway and Cedar Mtn. Quadrangle maps. The preamble to T.D. ATF–407, explains that the mountain elevations block the Pacific Ocean's marine air from continuing eastward and inland. Also, the other side of the Diablo Range, to the east of the Livermore Valley, has higher temperatures, lower humidity, and decreased rainfall, typical of a continental climate.

The concurrent petition to expand the Livermore Valley viticultural area, the petitioner states, provides an opportunity to align the boundaries of all three viticultural areas—Livermore Valley, San Francisco Bay, and Central Coast—into one common boundary line in this region. According to the petitioner, the proposed expansion of the San Francisco Bay and Central Coast viticultural areas would result in eastern boundaries for these two areas that would coincide with the Livermore Valley viticultural area. The petitioner argues that this expansion remains consistent with the essential elements currently recognized by TTB, such as name, regional identity, and distinguishing geographical features. Moreover, the petitioner states, this expansion would serve consumers by providing clear, unambiguous boundaries that would aid, rather than complicate, their wine buying decisions.

Name and Boundary Evidence

T.D. ATF–407, 64 FR 3018, which established the San Francisco Bay viticultural area and expanded the Central Coast viticultural area to the north, details evidence for name recognition and regional identity for the San Francisco Bay viticultural area and the Central Coast viticultural area. It explains that the counties of San Francisco, Contra Costa, Alameda, Santa Clara, and San Mateo all border the San Francisco Bay body of water and are consistently considered to be part of the San Francisco Bay region. All, or portions of, the five counties listed above are within the established San Francisco Bay and Central Coast viticultural areas boundary lines.

To support the expansion of the Central Coast viticultural area boundaries, the petitioner cites T.D. ATF–407, which maintains that the general marine climate extends north and northwest beyond the originally established Central Coast viticultural area boundaries. Also, the name recognition of Central Coast, as used by wine writers and in the California State legislature, extends north and west into the five counties surrounding the San Francisco Bay body of water. Thus, the petitioner contends that because the names of both the San Francisco Bay and Central Coast viticultural areas are unaffected by the proposed boundary expansion, the evidence cited in the T.D. ATF–407 remains accurate.

The proposed alignment of the San Francisco Bay and Central Coast boundaries with the expanded Livermore Valley boundary is limited to Alameda and Contra Costa Counties. These counties encompass the Central Coast's northeastern region and the San Francisco Bay's eastern region, as noted on the USGS maps and by the written boundary descriptions. While the aligned boundaries for both the San Francisco Bay and Central Coast viticultural areas would expand eastward, it would be in a limited manner, and the boundaries remain true to the 1999 T.D. ATF–407 regional definitions for both viticultural areas, according to the petitioner.

In sum, the name recognition for the affected portions of Alameda and Contra Costa Counties continue as the San Francisco Bay area and the larger Central Coast area, as documented in T.D. ATF–407. Also, the distinguishing boundary and climatic characteristics, as described in T.D. ATF–407, including the cooling marine influences from the Pacific Ocean and San Francisco Bay and the natural boundary of the Diablo Range apply equally to the proposed expansion area.

Boundary Description

See the changes to the narrative boundary descriptions for the petitioned-for viticultural area expansions in the proposed regulatory text amendments published at the end of this notice.

Maps

The petitioner provided the required maps for the expansions, and we list them below in the proposed regulatory text amendments.

Impact on Current Wine Labels

The proposed expansion of the San Francisco Bay and Central Coast viticultural areas will not affect currently approved wine labels. The approval of this proposed expansion may allow additional vintners to use ''San Francisco Bay'' and ''Central Coast'' as an appellation of origin on their wine labels. Part 4 of the TTB regulations prohibits any label reference on a wine that indicates or implies an origin other than the wine's true place of origin. For a wine to be eligible to use as an appellation of origin the name of a viticultural area specified in part 9 of the TTB regulations, at least 85 percent of the grapes used to make the wine must have been grown within the area represented by that name, and the wine must meet the other conditions listed in 27 CFR 4.25(e)(3). Different rules apply if a wine has a brand name containing a viticultural area name that was used as a brand name on a label approved before July 7, 1986. See 27 CFR 4.39(i)(2) for details.

Public Participation

Comments Invited

We invite comments from interested members of the public on whether we should expand the San Francisco Bay and Central Coast viticultural areas as described above. We are especially interested in comments concerning the similarity of the proposed expansion area to the currently existing San Francisco Bay and Central Coast viticultural areas. Please support your comments with specific information about the proposed expansion area's name, proposed boundaries, or distinguishing features.

Submitting Comments

Please submit your comments by the closing date shown above in this notice. Your comments must include this notice number and your name and mailing address. Your comments must be legible and written in language acceptable for public disclosure. We do not acknowledge receipt of comments, and we consider all comments as originals. You may submit comments in one of five ways:

• *Mail:* You may send written comments to TTB at the address listed in the **ADDRESSES** section.

• *Facsimile:* You may submit comments by facsimile transmission to 202–927–8525. Faxed comments must—

(1) Be on 8.5- by 11-inch paper;

(2) Contain a legible, written signature; and

(3) Be no more than five pages long. This limitation assures electronic access to our equipment. We will not accept faxed comments that exceed five pages.

• *E-mail:* You may e-mail comments to *nprm@ttb.gov*. Comments transmitted by electronic mail must—

(1) Contain your e-mail address;

(2) Reference this notice number on the subject line; and

(3) Be legible when printed on 8.5- by 11-inch paper.

• *Online form:* We provide a comment form with the online copy of this notice on our Web site at *http://www.ttb.gov/alcohol/rules/index.htm*. Select the ''Send comments via e-mail'' link under this notice number.

• *Federal e-Rulemaking Portal:* To submit comments to us via the Federal e-rulemaking portal, visit *http://www.regulations.gov* and follow the instructions for submitting comments.

You may also write to the Administrator before the comment closing date to ask for a public hearing. The Administrator reserves the right to determine, in light of all circumstances, whether to hold a public hearing.

Confidentiality

All submitted material is part of the public record and subject to disclosure. Do not enclose any material in your comments that you consider confidential or inappropriate for public disclosure.

Public Disclosure

You may view copies of this notice, the petition, the appropriate maps, and any comments we receive by appointment at the TTB Library at 1310 G Street, NW., Washington, DC 20220. You may also obtain copies at 20 cents per 8.5- x 11-inch page. Contact our librarian at the above address or telephone 202–927–2400 to schedule an appointment or to request copies of comments.

For your convenience, we will post this notice and comments we receive on the TTB Web site. We may omit voluminous attachments or material that we consider unsuitable for posting. In all cases, the full comment will be available in the TTB Library. To access the online copy of this notice and the submitted comments, visit *http://www.ttb.gov/alcohol/rules/index.htm*. Select the ''View Comments'' link under this notice number to view the posted comments.

Regulatory Flexibility Act

We certify that this proposed regulation, if adopted, would not have a significant economic impact on a substantial number of small entities. The proposed regulation imposes no new reporting, recordkeeping, or other administrative requirement. Any benefit derived from the use of a viticultural area name would be the result of a proprietor's efforts and consumer acceptance of wines from that area. Therefore, no regulatory flexibility analysis is required.

Executive Order 12866

This proposed rule is not a significant regulatory action as defined by Executive Order 12866, 58 FR 51735. Therefore, it requires no regulatory assessment.

Drafting Information

N.A. Sutton of the Regulations and Procedures Division drafted this notice.

List of Subjects in 27 CFR Part 9

Wine.

Proposed Regulatory Amendment

For the reasons discussed in the preamble, we propose to amend 27 CFR, chapter 1, part 9, Code of Federal Regulations, as follows:

PART 9—AMERICAN VITICULTURAL AREAS

1. The authority citation for part 9 continues to read as follows:

Authority: 27 U.S.C. 205.

Subpart C—Approved American Viticultural Areas

2. Section 9.75 is amended by revising the introductory text of paragraph (b), removing the word ''and'' at the end of paragraph (b)(40), replacing the period with a semicolon at the end of paragraph (b)(41), and by adding new paragraphs (b)(42) and (b)(43) and revising paragraphs (c)(10) through (c)(16) to read as follows:

§ 9.75 Central Coast.

* * * * *

(b) *Approved maps.* The approved maps for determining the boundary of the Central Coast viticultural area are the following 43 USGS topographic maps:

* * * * *

(42) Midway, California, scale 1:24,000, dated 1953, Photorevised 1980; and

(43) Cedar Mtn., California, scale 1:24,000, dated 1956, Photorevised 1971; Minor Revision 1994.

(c) * * *

* * * * *

(10) Then proceed southeast in a straight line approximately 1.8 miles to BM 720 in section 21. (Altamont Quadrangle)

(11) Then proceed south-southeast approximately 1 mile to an unnamed 1,147-foot peak in section 28. (Altamont Quadrangle)

(12) Then proceed south-southwest in a straight line approximately 1.1 miles to the intersection of the eastern boundary of section 32 with Highway 580. (Altamont Quadrangle)

(13) Then proceed south-southeast in a straight line approximately 2.7 miles to BM 1602 in Patterson Pass in section 10, Township 3 South, Range 3 East. (Altamont Quadrangle)

(14) Then proceed south-southeast in a straight line approximately 2.8 miles to BM 1600, adjacent to Tesla Road in section 26. (Midway Quadrangle)

(15) Then proceed south in a straight line approximately 4.2 miles to BM 1878, 40 feet north of Mines Road, in section 14, Township 4 South, Range 3 East. (Cedar Mtn. Quadrangle)

(16) Then proceed west-southwest in a straight line approximately 4.2 miles to the southeast corner of section 19. (Mendenhall Springs Quadrangle)

* * * * *

3. Section 9.157 is amended by revising the introductory text of paragraph (b), removing the word ''and'' at the end of paragraph (b)(41), replacing the period with a semicolon followed by the word ''and'' at the end of paragraph (b)(42), and by adding a new paragraph (b)(43) and revising paragraphs (c)(13) through (c)(18) to read as follows:

§ 9.157 San Francisco Bay.

* * * * *

(b) *Approved Maps.* The appropriate maps for determining the boundary of the San Francisco Bay viticultural area

are 43 1:24,000 Scale USGS topographic maps. They are titled:

* * * * *

(43) Cedar Mtn., California, scale 1:24,000, dated 1956, Photorevised 1971; Minor Revision 1994.

(c) * * *

* * * * *

(13) Then proceed northeast in a straight line approximately 3.2 miles to BM 1878 in section 14 on the Cedar Mtn. Quadrangle.

(14) Then proceed north in a straight line approximately 4.2 miles to BM 1600 adjacent to Tesla Road in section 26, Township 3 South, Range 3 East on the Midway Quadrangle.

(15) Then proceed north-northwest in a straight line approximately 2.8 miles to Patterson Pass, BM 1602, in section 10 on the Altamont Quadrangle.

(16) Then proceed north-northwest in a straight line approximately 2.7 miles to the intersection of the eastern boundary of section 32 with Highway 580 in Township 2 South, Range 3 East.

(17) Then proceed north-northeast in a straight line approximately 1.1 miles to an unnamed peak, elevation 1147, in section 28.

(18) Then proceed north-northwest in a straight line approximately 1 mile to BM 720 in section 21 and proceed northwest in a straight line approximately 1.8 miles to the northeast corner of section 18 on the Byron Hot Springs Quadrangle.

* * * * *

Signed: April 26, 2005.

John J. Manfreda,

Administrator.

[FR Doc. 05–10007 Filed 5–18–05; 8:45 am]

BILLING CODE 4810–31–P

DEPARTMENT OF THE TREASURY

Alcohol and Tobacco Tax and Trade Bureau

27 CFR Part 9

RIN 1513–AA54

[Notice No. 43]

Proposed Expansion of the Livermore Valley Viticultural Area (2002R–202P)

AGENCY: Alcohol and Tobacco Tax and Trade Bureau, Treasury.

ACTION: Notice of proposed rulemaking.

SUMMARY: The Alcohol and Tobacco Tax and Trade Bureau proposes to amend its regulations to expand the existing 96,000-acre Livermore Valley viticultural area in Alameda County, California. The proposed expansion would add 163,000 acres to the Livermore Valley viticultural area in northern Alameda and southern Contra Costa Counties. We designate viticultural areas to allow vintners to better describe the origin of their wines and to allow consumers to better identify the wines they may purchase. We invite comments on this proposed addition to our regulations.

DATES: We must receive written comments on or before July 18, 2005.

ADDRESSES: You may send comments to any of the following addresses:

- Chief, Regulations and Procedures Division, Alcohol and Tobacco Tax and Trade Bureau, Attn: Notice No. 43, P.O. Box 14412, Washington, DC 20044–4412.
- 202–927–8525 (facsimile).
- *nprm@ttb.gov* (e-mail).
- *http://www.ttb.gov/alcohol/rules/index.htm.* An online comment form is posted with this notice on our Web site.
- *http://www.regulations.gov* (Federal e-rulemaking portal; follow instructions for submitting comments).

You may view copies of this notice, the petition, the appropriate maps, and any comments we receive about this proposal by appointment at the TTB Library, 1310 G Street, NW., Washington, DC 20220. To make an appointment, call 202–927–2400. You may also access copies of the notice and comments online at *http://www.ttb.gov/alcohol/rules/index.htm.*

See the Public Participation section of this notice for specific instructions and requirements for submitting comments, and for information on how to request a public hearing.

FOR FURTHER INFORMATION CONTACT: N.A. Sutton, Regulations and Procedures Division, Alcohol and Tobacco Tax and Trade Bureau, 925 Lakeville St., No. 158, Petaluma, California 94952; telephone 415–271–1254.

SUPPLEMENTARY INFORMATION:

Background on Viticultural Areas

TTB Authority

Section 105(e) of the Federal Alcohol Administration Act (the FAA Act, 27 U.S.C. 201 *et seq.*) requires that alcohol beverage labels provide consumers with adequate information regarding product identity and prohibits the use of misleading information on such labels. The FAA Act also authorizes the Secretary of the Treasury to issue regulations to carry out its provisions. The Alcohol and Tobacco Tax and Trade Bureau (TTB) administers these regulations.

Part 4 of the TTB regulations (27 CFR part 4) allows the establishment of definitive viticultural areas and the use of their names as appellations of origin on wine labels and in wine advertisements. Part 9 of the TTB regulations (27 CFR part 9) contains the list of approved viticultural areas.

Definition

Section 4.25(e)(1)(i) of the TTB regulations (27 CFR 4.25(e)(1)(i)) defines a viticultural area for American wine as a delimited grape-growing region distinguishable by geographical features, the boundaries of which have been recognized and defined in part 9 of the regulations. These designations allow vintners and consumers to attribute a given quality, reputation, or other characteristic of a wine made from grapes grown in an area to its geographic origin. The establishment of viticultural areas allows vintners to describe more accurately the origin of their wines to consumers and helps consumers to identify wines they may purchase. Establishment of a viticultural area is neither an approval nor an endorsement by TTB of the wine produced in that area.

Requirements

Section 4.25(e)(2) of the TTB regulations outlines the procedure for proposing an American viticultural area and provides that any interested party may petition TTB to establish a grape-growing region as a viticultural area. Petitioners may use the same procedure to request changes involving existing viticultural areas. Section 9.3(b) of the TTB regulations requires the petition to include—

- Evidence that the proposed viticultural area is locally and/or nationally known by the name specified in the petition;
- Historical or current evidence that supports setting the boundary of the proposed viticultural area as the petition specifies;
- Evidence relating to the geographical features, such as climate, elevation, physical features, and soils, that distinguish the proposed viticultural area from surrounding areas;
- A description of the specific boundary of the proposed viticultural area, based on features found on United States Geological Survey (USGS) maps; and
- A copy of the appropriate USGS map(s) with the proposed viticultural area's boundary prominently marked.

Livermore Valley Expansion Petition

TTB received a petition from the President of the Livermore Valley Winegrowers Association proposing to expand the existing Livermore Valley

viticultural area in California (27 CFR 9.46). As currently defined, the area is located in Alameda County on the portion of the Livermore Valley floor bordered by the Altamont Hills and Crane Ridge to the east, Pleasanton Ridge to the west, Cedar Mountain Ridge and Rocky Ridge to the south, and the Black Hills to the north. Presently, the Livermore Valley viticultural area encompasses about 96,000 acres, of which 4,235 are devoted to vineyards. A total of 20 wineries operate in the existing viticultural area.

TTB also received a petition proposing to expand the existing San Francisco Bay viticultural area (27 CFR 9.157) and Central Coast viticultural area (27 CFR 9.75) from the Livermore Valley Winegrowers Association. These proposed expansions, which are the subject of a notice published elsewhere in this issue of the **Federal Register**, correspond directly to the proposed Livermore Valley viticultural area (27 CFR 9.46) expansion, the subject of this notice.

The petitioner requests an expansion of the existing Livermore Valley viticultural area so that it encompasses both the valley floor and the flanking hills that define the valley's geography and watershed in Alameda County and southern Contra Costa County. According to the petitioner, the expanded Livermore Valley viticultural area would be bounded by the Altamont Hills and Crane Ridge to the east, Cedar Mountain Ridge and Rocky Ridge to the south, Walpert Ridge and Rocky Ridge to the west, and the peak of Mount Diablo (the highest point of the Black Hills) to the north. The proposed expansion of the Livermore Valley viticultural area would result in a viticultural area of about 259,000 acres, of which 4,355 acres are devoted to vineyards belonging to 24 wineries. The expansion, therefore, would add approximately 163,000 total acres, 120 acres of vineyards, and 4 wineries to the viticultural area.

Below, we summarize the evidence presented in the Livermore Valley expansion petition.

Name Evidence

The original final rule that adopted the Livermore Valley viticultural area, T.D. ATF–112 (47 FR 38520, September 1, 1982), details the derivation of Livermore Valley as a place name and summarizes strong evidence of Livermore Valley's local and national renown as a vineyard region. As shown in ''A Companion to California Wine'' and ''The Wine Atlas of California,'' the petitioner states that Livermore Valley continues to garner renown as one of California's most historic wine regions.

The petitioner in the present case reviewed historic and scientific evidence, and believes the current viticultural area boundaries do not accurately encompass land historically and geographically identified as the Livermore Valley growing region. This evidence shows that lands adjacent to current Livermore Valley viticultural area boundaries to the north, east, south, and west deserve to be included in the viticultural area, based on both shared name identification and shared geographical features. In addition, the Livermore Valley viticultural area and the proposed additions contrast sharply with lands beyond the revised boundaries presented in the petition.

''Wines & Vines of California,'' ''American Wines,'' ''Gorman on Premium California Wines,'' and ''The Winewright's Register'' all document Livermore Valley as a much larger area, encompassing the entire valley basin and its surrounding hills. All four works recognize Livermore Valley as reaching north to Mount Diablo, and all mention the hills that surround the Livermore Valley basin to the east, south, and west. As indicated below, the evidence defining Livermore Valley in this broader context covers all eras of the region's viticultural history, from the 1880's to the present.

Boundary Evidence

According to the petitioner, the Livermore Valley has a long viticultural history and strong regional identity, though precise boundaries for the region were not defined until 1982, when the Livermore Valley viticultural area was established. As described earlier in this notice, the petitioner states that the Livermore Valley viticultural area currently encompasses only a portion of the region's valley topography. This notice proposes to expand the boundaries of the Livermore Valley viticultural area to include those lands that, based on name identity and natural features, the petitioners believe should have been included in the original viticultural area petition. The petitioner states that the proposed expansion boundaries maintain the historic and geographic integrity of Livermore Valley viticultural area.

Historical and current evidence presented in the petition explains that Livermore Valley includes the entire valley basin and its encircling hills, rather than the relatively limited portion of the valley floor encompassed in the original petition. Historical and modern maps provided with the petition show Livermore Valley as including the entire basin area. In the book ''Early Days in the Livermore Valley,'' the Livermore-Amador Valley is shown as reaching from Niles Canyon and Vallecitos in the south to Tassajara in the north, and from the hills west of Pleasanton to the Altamont Pass and the eastern limits of Arroyo Seco to the east. Bulletin No. 118–2 from the California Department of Water Resources, ''Evaluation of Ground Water Resources: Livermore and Sunol Valley,'' similarly features maps on land use and mean annual precipitation that show Livermore Valley stretching from Niles Canyon in the south to well beyond the Alameda/Contra Costa County line in the north, and from hills west of Pleasanton in the west to the Altamont Pass and the hills east of Livermore in the east. The book ''Valley Profiles: A Photographic Essay on the Livermore Valley of California'' includes a map of the Livermore Valley that encompasses virtually the same area as the previous examples: South to beyond Sunol, north to beyond Danville, west into the hills east of Pleasanton and Dublin, and east to Altamont Pass.

The petitioner contends that this expansion of the Livermore Valley viticultural area has strong local support, and the Livermore Valley Winegrowers Association, which represents virtually all the vintners and growers in the region, endorses the proposed expansion. The Association's membership includes wineries and vineyards located in Palomares Canyon and Sunol, along the western edge of the proposed expansion. Wente Vineyards, one of the original Livermore Valley viticultural area petitioners in the early 1980s, also favors and supports the viticultural area boundary expansion proposal. In addition, the Association's promotional brochure, ''Livermore Valley Wine Country,'' features a map showing the broader definition of Livermore Valley.

The petitioner claims that the Livermore Valley is considerably larger than the limited portion of the valley floor and southern hills included in the 1982 originally established Livermore Valley viticultural area. Moreover, petition evidence shows the Livermore Valley to be primarily defined by natural topographic features (that is, mountain ranges and river drainages). The distinctive geographic features that distinguish Livermore Valley, according to the petitioner, result from these natural topographic features and their influences and provide strong argument for expansion of the viticultural area to include the entire Livermore Valley and its encircling hills.

Distinguishing Features

The petitioner states that the proposed expansion of the Livermore Valley viticultural area encompasses land with the same geographical features as the current viticultural area. The uniformity of distinguishing elements (climate, soil, and topography) is detailed below. The foregoing is evidence that the expansion area proposed by this petition is known as Livermore Valley.

Climate

As stated in T.D. ATF–112, the original final rule establishing the Livermore Valley viticultural area, the Valley has a moderate coastal climate resulting from its proximity to San Francisco Bay and the Pacific Ocean. The original final rule also cites cool marine winds and morning fog as important factors in moderating temperatures during the growing season and keeping the area's vineyards relatively frost-free during the early spring.

The majority of vineyard acreage in the Livermore Valley viticultural area, as explained in T.D. ATF–112, is classified under the University of California at Davis system of heat summation by degree-days as Region III (3,001–3,500 degree-days). It further states that a small portion of the area within Livermore Valley is classified as Region II (2,501–3000 degree-days). (During the growing season, one degree day accumulates for each degree Fahrenheit that a day's average temperature is above 50 degrees, which is the minimum temperature required for grapevine growth. See ''General Viticulture,'' by Albert J. Winkler, University of California Press, 1974.)

According to the petitioner, cumulative climate data from the National Weather Service shows an average annual degree-day total of 3,425 in the town of Livermore, the heart of the current Livermore Valley viticultural area, which is at 486feet in elevation. The only equivalent weather station in the proposed expanded viticultural area is located at the 2,100-foot elevation Mount Diablo Junction, just south of the proposed northern boundary. Cumulative climate data from this weather station shows an average total for the growing season of 3,359 degree-days. The petitioner states that this provides clear evidence that the climate in the expansion area is the same Region III range as most of the current Livermore Valley viticultural area.

The cool marine winds and morning fog enter the Livermore Valley from San Francisco Bay through gaps in the western hills of Alameda and Contra Costa Counties, specifically through Niles Canyon and Hayward Pass (at the top of Dublin Canyon), as detailed in the San Jose Astronomical Association material (*http://ephemeris.sjaa.net/0107/b.html*, search dated 10/01/01), and through Crow Canyon. Such cooling influences are not limited to a specific section of the Valley, but, as seen from the degree-day data above, provide a relatively uniform climate throughout the Livermore Valley basin.

Developed by Waldimir Koppen in the early 20th century based on temperature, precipitation, and vegetation, the Koppen (or ''Koeppen'') climate classification system also offers evidence of this uniform climate, according to the petitioner. The ''Koeppen Classification for California'' map, developed by the University of Idaho, and the ''Koppen Climate Chart'' classify the Livermore Valley as ''Csb,'' described as ''Mediterranean-mild with dry warm summer.'' The region is differentiated from the ''Csa'' (''Mediterranean mild with dry, hot summer'') and ''BSk'' (Mid-latitude steppe, Mid-latitude dry) classifications found to the east. Significantly, the boundary line between these climate classifications almost exactly duplicates the proposed eastern boundary of the expanded Livermore Valley viticultural area. According to the petitioner, with the entire Livermore Valley basin sharing the same climate, it is logical that the entire basin should be included in the Livermore Valley viticultural area.

The petitioner believes that the Livermore Valley basin's climate during the growing season represents a transition zone between the very cool, temperate, marine-influenced climate directly adjacent to San Francisco Bay, and the hot, dry diurnally (day versus night) differentiated climate of the upper San Joaquin Valley. According to the petitioner, a clear indicator of the unique character of the Livermore Valley basin climate can be seen by comparing the average growing season degree-day totals at climate stations within the region to those that are east and west of the proposed viticultural area at approximately the same latitude. As mentioned earlier, the average degree-day total within the proposed expanded Livermore Valley viticultural area is fairly consistent—3,425 at Livermore, 3,359 at Diablo Junction. The total at Upper San Leandro FLTR, directly west of the proposed expansion area near San Francisco Bay is 2,461 degree-days; the total at Tracy Carbona, directly east of the proposed expansion area in the San Joaquin Valley, is 2,465 degree-days. The Livermore Valley basin, bounded by hills to the west and east, has a unique climate distinct from the adjacent areas, a geographical feature that strongly supports expansion of the viticultural area to the natural boundaries, according to the petitioner.

Soils

According to the petitioner, soils provide additional support for the proposed expansion of the Livermore Valley viticultural area. Although the geographic area encompassed by the proposed expansion is significantly larger than the current Livermore Valley viticultural area, the underlying geology and historic geologic forces crucial to soil formation are the same, resulting in soils in the expansion areas that are thoroughly consistent with those of the original viticultural area, the petition states.

As shown on the Geologic Map of California, the same substrata geology comprises both the current Livermore Valley viticultural area and the proposed expansion: Pleistocene alluvial, mostly non-marine terrace deposits on the basin floor; Pleistocene, Pliocene, Miocene and Cretaceous sandstone, shale, gravel, and conglomerate in the northern, eastern and western hills; and Franciscan Complex fragmented and sheared sandstone in the southern hills.

The petitioner states that the geologic forces that created the topography and soils of the proposed expanded Livermore Valley viticultural area are the same as the current Livermore Valley viticultural area. Uplift and subsidence along several earthquake faults (among them the Calaveras and Pleasanton faults to the west, the Greenwood fault to the east, and the Livermore and Tesla fault in the center of the Valley) have shaped the region's topography. Erosion and weathering of base material on the slopes and deposit of sediment on the Valley floor due to runoff over the millennia have created the soils of the region.

T.D. ATF–112, which established the Livermore Valley viticultural area, states, ''The main soil type is the Yolo-Pleasanton association with the Livermore gravelly and very gravelly series being prominent in the southern portion of the valley.'' The petitioner believes this description represents a highly simplified review of the soils in the original viticultural area. According to the ''Soil Survey, Alameda Area, California,'' published by the United States Department of Agriculture (USDA) in cooperation with the California Agricultural Experiment

Station in 1966, the portion of the Livermore Valley floor within the current viticultural area also includes Positas-Perkins association (shallow gravelly loam on terraces) and Clear Lake-Sunnyvale association (shallow clay soils on basins and terraces). Soils recorded on the slopes of the current viticultural area by the survey include Millsholm-Los Gatos-Los Osos association (well to excessively drained low fertility soils on moderately sloping to very steep slopes), Altamont-Diablo association (well to excessively drained clayey moderate to high fertility soils on rolling to steep slopes), and Vallecitos-Parris association (well-drained to excessively drained shallow loam and gravelly loam soils, on steep to very steep slopes).

Both the ''Soil Survey, Alameda Area, California'' and the ''Soil Survey of Contra Costa, California,'' published by the USDA in cooperation with the California Agricultural Experiment Station in 1977, record the same soil associations in the proposed expansion area as in the current viticultural area. In two cases, slightly different associations are recorded in the two soil surveys (Altamont-Diablo and Clearlake-Sunnyvale in Alameda; Altamont-Diablo-Fontana and Clearlake-Cropley in Contra Costa), sometimes on contiguous sites. In both cases, the soil descriptions are virtually identical, suggesting slightly differing surveyor interpretations of the same soils.

From a viticultural standpoint, the petitioner explains, soils in the proposed Livermore Valley viticultural area expansion are distinguished from surrounding areas to the north and east (the only sites on which vineyards logically can be planted in the immediate vicinity, due to steep terrain, population density, and other factors). Soils north and east of the proposed boundaries transition into Brentwood-Rincon Zamora association (level, well-drained clay and silty clay loam on alluvial fans) and Marcuse-Solan-Pescadero association (nearly level, poorly drained clays, loam and clay loams on basin rims). While suited to vineyards, the petitioner explains, these soils differ from those in the current Livermore Valley viticultural area and the proposed expansion.

Evidence Summary

The petitioner contends that the climate for the entire Livermore Valley basin is the same moderate coastal climate as found in the existing Livermore Valley viticultural area, with the same average degree-day totals. In addition, the climate data and supporting evidence show the Livermore Valley basin experiences the same cooling marine influences of wind and morning fog through the gaps in the western hills of Alameda and Contra Costa Counties as the current viticultural area. This unique climate, identical both in the current Livermore Valley viticultural area and in the broader Livermore Valley basin, the petitioner states, is evidence that the two areas are the same.

According to the petitioner, geologic and soils evidence illustrates the identical nature of the two areas in the substrata geology. The geologic forces responsible for the topography and soils throughout the proposed expansion are the same as in the current viticultural area. The result is soils in the proposed expansion area that mirror those in the current viticultural area—the same soil associations (with allowance for surveyor interpretation) occur in both. Unlike the climate, the soils in the proposed expansion area are not absolutely unique to the region. However, lands beyond the boundaries to the west and north—the only adjacent areas suited to grape growing—transition into soil association not found in the current viticultural area or the proposed expansion area.

The petitioner believes the distinguishing features of the original Livermore Valley viticultural area, including the climate and soils, are present in the proposed expansion area, and provide sufficient evidence to meet the requirements of 27 CFR 9.3.

Boundary Description

See the narrative boundary description of the petitioned-for expanded Livermore Valley viticultural area in the proposed regulatory text amendment published at the end of this notice.

Maps

The petitioner provided the required maps, and we list them below in the proposed regulatory text amendment.

Impact on Current Wine Labels

The proposed expansion of the Livermore Valley viticultural area will not affect currently approved wine labels. The approval of this proposed expansion may allow additional vintners to use ''Livermore Valley'' as an appellation of origin on their wine labels. Part 4 of the TTB regulations prohibits any label reference on a wine that indicates or implies an origin other than the wine's true place of origin. For a wine to be eligible to use as an appellation of origin the name of a viticultural area specified in part 9 of the TTB regulations, at least 85 percent of the grapes used to make the wine must have been grown within the area represented by that name, and the wine must meet the other conditions listed in 27 CFR 4.25(e)(3). Different rules apply if a wine has a brand name containing a viticultural area name that was used as a brand name on a label approved before July 7, 1986. See 27 CFR 4.39(i)(2) for details.

Public Participation

Comments Invited

We invite comments from interested members of the public on whether we should expand the Livermore Valley viticultural area as described above. We are especially interested in comments concerning the similarity of the proposed expansion area to the currently existing Livermore Valley viticultural area. Please support your comments with specific information about the proposed expansion area's name, proposed boundaries, or distinguishing features.

Submitting Comments

Please submit your comments by the closing date shown above in this notice. Your comments must include this notice number and your name and mailing address. Your comments must be legible and written in language acceptable for public disclosure. We do not acknowledge receipt of comments, and we consider all comments as originals.

You may submit comments in any one of five ways.

- *Mail:* You may send written comments to TTB at the address listed in the **ADDRESSES** section.
- *Facsimile:* You may submit comments by facsimile transmission to 202–927–8525. Faxed comments must—
  (1) Be on 8.5- by 11-inch paper;
  (2) Contain a legible, written signature; and
  (3) Be no more than five pages long. This limitation assures electronic access to our equipment. We will not accept faxed comments that exceed five pages.
- *E-mail:* You may e-mail comments to *nprm@ttb.gov*. Comments transmitted by electronic mail must—
  (1) Contain your e-mail address;
  (2) Reference this notice number on the subject line; and
  (3) Be legible when printed on 8.5- by 11-inch paper.
- *Online form:* We provide a comment form with the online copy of this notice on our Web site at *http://www.ttb.gov/alcohol/rules/index.htm*. Select the ''Send comments via e-mail'' link under this notice number.
- *Federal e-Rulemaking Portal:* To submit comments to us via the Federal

e-rulemaking portal, visit *http://www.regulations.gov* and follow the instructions for submitting comments.

You may also write to the Administrator before the comment closing date to ask for a public hearing. The Administrator reserves the right to determine, in light of all circumstances, whether to hold a public hearing.

Confidentiality

All submitted material is part of the public record and subject to disclosure. Do not enclose any material in your comments that you consider confidential or inappropriate for public disclosure.

Public Disclosure

You may view copies of this notice, the petition, the appropriate maps, and any comments we receive by appointment at the TTB Library at 1310 G Street, NW., Washington, DC 20220. You may also obtain copies at 20 cents per 8.5- x 11-inch page. Contact our librarian at the above address or telephone 202–927–2400 to schedule an appointment or to request copies of comments.

For your convenience, we will post this notice and any comments we receive on this proposal on the TTB Web site. We may omit voluminous attachments or material that we consider unsuitable for posting. In all cases, the full comment will be available in the TTB Library. To access the online copy of this notice and the submitted comments, visit *http://www.ttb.gov/alcohol/rules/index.htm*. Select the ''View Comments'' link under this notice number to view the posted comments.

Regulatory Flexibility Act

We certify that this proposed regulation, if adopted, would not have a significant economic impact on a substantial number of small entities. The proposed regulation imposes no new reporting, recordkeeping, or other administrative requirement. Any benefit derived from the use of a viticultural area name would be the result of a proprietor's efforts and consumer acceptance of wines from that area. Therefore, no regulatory flexibility analysis is required.

Executive Order 12866

This proposed rule is not a significant regulatory action as defined by Executive Order 12866, 58 FR 51735. Therefore, it requires no regulatory assessment.

Drafting Information

N.A. Sutton of the Regulations and Procedures Division drafted this notice.

List of Subjects in 27 CFR Part 9

Wine.

Proposed Regulatory Amendment

For the reasons discussed in the preamble, we propose to amend title 27, chapter 1, part 9, Code of Federal Regulations, as follows:

PART 9—AMERICAN VITICULTURAL AREAS

1. The authority citation for part 9 continues to read as follows:

Authority: 27 U.S.C. 205.

Subpart C—Approved American Viticultural Areas

2. Revise paragraphs (b) and (c) of § 9.46 to read as follows:

§ 9.46 Livermore Valley.

* * * * *

(b) *Approved Maps.* The appropriate maps for determining the boundaries of the Livermore Valley viticultural area are thirteen 1:24,000 scale U.S.G.S. topographic maps. They are titled:

(1) Clayton, CA (1953; Photorevised 1980, Minor Revision 1994);

(2) Diablo, Calif. (1953, Photorevised 1980);

(3) Tassajara, CA (1996);

(4) Byron Hot Springs, Calif. (1953, Photorevised 1968);

(5) Altamont, Calif. (1953, Photorevised 1981);

(6) Midway, Calif. (1953, Photorevised 1980);

(7) Cedar Mtn., CA (1956, Photorevised 1971, Minor Revision 1994);

(8) Mendenhall Springs, CA (1996);

(9) La Costa Valley, CA (1996);

(10) Niles, Calif. (1961, Photorevised 1980);

(11) Dublin, Calif. (1961, Photorevised 1980);

(12) Hayward, CA (1993); and

(13) Las Trampas Ridge, CA (1995).

(c) *Boundary.* The Livermore Valley viticultural area is located in the State of California in Contra Costa and Alameda Counties. The Livermore Valley viticultural area's boundary is defined as follows—

(1) Begin on the Clayton map at the peak of Mount Diablo (VABM 3849) where the Mount Diablo Base Line and Mount Diablo Meridian Line intersect; then

(2) Proceed southeast in a straight line for approximately 14 miles, crossing the Diablo and Tassajara maps, and pass onto the Byron Hot Springs map to the summit of Brushy Peak (elevation 1,702 feet); then

(3) Continue due south in a straight line approximately 400 feet to the northern boundary of section 13, T2S, R2E; then

(4) Proceed due east along the section 13, T2S, R2E, and section 18, T2S, R3E, northern boundary lines to the northeast corner of section 18; then

(5) Continue southeast in a straight line approximately 1.8 miles to BM 720 in section 21, T2S, R3E, on the Altamont map; then

(6) Continue south-southeast in a straight line approximately 1 mile to an unnamed 1,147-foot peak in section 28, T2S, R3E; then

(7) Continue south-southwest in a straight line approximately 1.1 miles to the intersection of the eastern boundary of section 32, T2S, R3E, with Interstate 580; then

(8) Continue southeast in a straight line approximately 2.7 miles to BM 1602 in Patterson Pass in section 10, T3S, R3E; then

(9) Continue south-southeast in a straight line approximately 2.8 miles to BM 1600, adjacent to Tesla Road in section 26, T3S, R3E, on the Midway map; then

(10) Continue south in a straight line approximately 4.2 miles, passing onto the Cedar Mtn. map, to BM 1878, 40 feet north of Mines Road, in section 14, T4S, R3E; then

(11) Proceed west-southwest in a straight line approximately 4.2 miles, passing onto the Mendenhall Springs map, to the southeast corner of section 19, T4S, R3E; then

(12) Continue west along the southern boundaries of section 19, T4S, R3E, and section 24, T4S, R2E, to the southwest corner of section 24; then

(13) Proceed north along the western boundary of section 24, T4S, R2E, to the southeast corner of section 14, T4S, R2E; then

(14) Continue west along the southern boundary of section 14, T4S, R2E, to its southwest corner and then proceed north along the western boundary of section 14 to its intersection with the Hetch Hetchy Aqueduct; then

(15) Follow the Hetch Hetchy Aqueduct west-southwest approximately 4.2 miles to the Aqueduct's intersection with the R1E/R2E range line on the La Costa Valley map; then

(16) Continue southwest in a straight line approximately 3.9 miles, crossing Apperson, Welsh, and Alameda Creeks, to BM 533 in section 10, T5S, R1E; then

(17) Proceed due west-northwest in a straight line approximately 1.9 miles, passing onto the Niles map, to the line's

intersection with the eastern boundary of section 5, T5S, R1E; then

(18) Continue northwest in a straight line approximately 1.1 miles to the 1,291-foot peak in section 32, T4S, R1E; then

(19) Continue northwest in a straight line approximately 1.1 miles to the 1,004-foot peak in section 30, T4S, R1E; then

(20) Continue northwest in a straight line approximately 3.8 miles, passing through BM 161 in section 11, T4S, R1W, until the line intersects Palomares Road in section 11; then

(21) Follow Palomares Road in a northerly direction for approximately 0.7 miles to the road's intersection with the power transmission line shown in section 11, T4S, R1W; then

(22) Proceed northwest along the power transmission line for approximately 6.4 miles, passing through the Dublin map near Walpert Ridge, onto the Hayward map to the point where the power transmission line turns nearly west, approximately 500 feet south of an unnamed 891-foot peak; then

(23) Continue north-northwest in a straight line approximately 1.4 miles to an unnamed 840-foot peak; then

(24) Proceed north-northeast in a straight line approximately 3.4 miles, returning to the Dublin map, to the point of an angle in the Contra Costa-Alameda County line in section 20, T2S, R1W, about 0.4 miles west of Wiedemann Hill (elevation 1,854); then

(25) Beginning in a northwesterly direction, proceed along the meandering Contra Costa-Alameda County line for approximately 6.0 miles, passing briefly onto the Hayward, Las Trampas Ridge, and Diablo maps, before returning the Las Trampas Ridge map and continuing to the point of an angle in the Contra Costa-Alameda County line in section 35, T1S, R2W; then

(26) From that point, continue north-northwest in a straight line approximately 2.7 miles to the summit of Las Trampas Peak (elevation 1,827 feet) in section 22, T1S, R2W; then

(27) Proceed east-northeast in a straight line approximately 8.8 miles, passing through the Diablo map, and return to the beginning point at the summit of Mount Diablo on the Clayton map.

Signed: April 28, 2005.

John J. Manfreda,

Administrator.

[FR Doc. 05–10006 Filed 5–18–05; 8:45 am]

BILLING CODE 4810–31–P

ENVIRONMENTAL PROTECTION AGENCY

40 CFR Part 52

[CA–309–4775b; FRL–7902–1]

Revisions to the California State Implementation Plan, Imperial County Air Pollution Control District and San Joaquin Valley Unified Air Pollution Control District

AGENCY: Environmental Protection Agency (EPA).

ACTION: Proposed rule.

SUMMARY: EPA is proposing to approve revisions to the Imperial County Air Pollution Control District (ICAPCD) and San Joaquin Valley Unified Air Pollution Control District (SJVUAPCD) portions of the California State Implementation Plan (SIP). These revisions concern volatile organic compound (VOC) emissions from aerospace manufacturing and component coating and can and coil coating operations. We are proposing to approve local rules to regulate these emission sources under the Clean Air Act as amended in 1990 (CAA or the Act).

DATES: Any comments on this proposal must arrive by June 20, 2005.

ADDRESSES: Send comments to Andy Steckel, Rulemaking Office Chief (AIR–4), U.S. Environmental Protection Agency, Region IX, 75 Hawthorne Street, San Francisco, CA 94105–3901, or e-mail to *steckel.andrew@epa.gov,* or submit comments at *http://www.regulations.gov.*

You can inspect copies of the submitted SIP revisions, EPA's technical support documents (TSDs), and public comments at our Region IX office during normal business hours by appointment. You may also see copies of the submitted SIP revisions by appointment at the following locations:

California Air Resources Board, Stationary Source Division, Rule Evaluation Section, 1001 ''I'' Street, Sacramento, CA 95814;

Imperial County Air Pollution Control District, 150 South 9th Street, El Centro, CA 92243; and

San Joaquin Valley Unified Air Pollution Control District, 1990 East Gettysburg Ave., Fresno, CA 93726.

A copy of the rule may also be available via the Internet at *http://www.arb.ca.gov/drdb/drdbltxt.htm.* Please be advised that this is not an EPA Web site and may not contain the same version of the rule that was submitted to EPA.

FOR FURTHER INFORMATION CONTACT: Jerald S. Wamsley, EPA Region IX, (415) 947–4111, *wamsley.jerry@epa.gov.*

SUPPLEMENTARY INFORMATION: This proposal addresses ICAPCD Rule 425—Aerospace Coating Operations and SJVUAPCD Rule 4604—Can and Coil Coating Operations. In the Rules and Regulations section of this **Federal Register**, we are approving these local rules in a direct final action without prior proposal because we believe these SIP revisions are not controversial. However, if we receive adverse comments, we will publish a timely withdrawal of the direct final rule and address the comments in subsequent action based on this proposed rule. Please note that if we receive adverse comment on an amendment, paragraph, or section of this rule and if that provision may be severed from the remainder of the rule, we may adopt as final those provisions of the rule that are not the subject of an adverse comment.

We do not plan to open a second comment period, so anyone interested in commenting should do so at this time. If we do not receive adverse comments, no further activity is planned. For further information, please see the direct final action.

Dated: March 25, 2005.

Laura Yoshii,

Acting Regional Administrator, Region IX.

[FR Doc. 05–10011 Filed 5–18–05; 8:45 am]

BILLING CODE 6560–50–P

DEPARTMENT OF TRANSPORTATION

National Highway Traffic Safety Administration

49 CFR Part 571

[Docket No. NHTSA–2005–21244]

RIN 2127–AJ59

Federal Motor Vehicle Safety Standards; Occupant Crash Protection

AGENCY: National Highway Traffic Safety Administration (NHTSA), Department of Transportation (DOT).

ACTION: Notice of proposed rulemaking (NPRM).

SUMMARY: This NPRM would amend Federal Motor Vehicle Safety Standard No. 208, *Occupant crash protection,* by proposing test procedures applicable to vehicles that have a child restraint anchorage system, commonly referred to as a ''LATCH'' system, in a front passenger seating position and that comply with advanced air bag requirements through the use of a

suppression system. Beginning September 1, 2006, these vehicles must suppress the air bag in the presence of a child restraint system that is attached to the vehicle's LATCH system. The procedures proposed in this document specify a repeatable, reproducible, and realistic method of attaching child restraints to the LATCH system for the suppression test.

DATES: You should submit comments early enough to ensure that Docket Management receives them not later than July 18, 2005.

ADDRESSES: You may submit comments by any of the following methods:

- Web site: *http://dms.dot.gov.* Follow the instructions for submitting comments on the DOT electronic docket site.
- Fax: 1–202–493–2251.
- Mail: Docket Management Facility; U.S. Department of Transportation, 400 Seventh Street, SW., Nassif Building, Room PL–401, Washington, DC 20590–001.
- Hand Delivery: Room PL–401 on the plaza level of the Nassif Building, 400 Seventh Street, SW., Washington, DC, between 9 a.m. and 5 p.m., Monday through Friday, except Federal Holidays.
- Federal eRulemaking Portal: Go to *http://www.regulations.gov.* Follow the online instructions for submitting comments.

Instructions: All submissions must include the agency name and docket number or Regulatory Identification Number (RIN) for this rulemaking. For detailed instructions on submitting comments and additional information on the rulemaking process, see the Request for Comments heading of the Supplementary Information section of this document. Note that all comments received will be posted without change to *http://dms.dot.gov,* including any personal information provided. Please see the Privacy Act heading under Rulemaking Analyses and Notices.

Docket: For access to the docket to read background documents or comments received, go to *http://dms.dot.gov* at any time or to Room PL–401 on the plaza level of the Nassif Building, 400 Seventh Street, SW., Washington, DC, between 9 a.m. and 5 p.m., Monday through Friday, except Federal Holidays.

FOR FURTHER INFORMATION CONTACT: For non-legal issues, you may contact Lou Molino, Office of Crashworthiness Standards, Light Duty Vehicle Division by phone at (202) 366–1740, and by fax at (202) 493–2739.

For legal issues, you may contact Christopher Calamita of the NHTSA Office of Chief Counsel by phone at (202) 366–2992 and by fax at (202) 366–3820.

You may send mail to both of these officials at the National Highway Traffic Safety Administration, 400 Seventh St., SW., Washington, DC 20590.

SUPPLEMENTARY INFORMATION:

I. Background

Federal Motor Vehicle Safety Standard (FMVSS) No. 208, ''Occupant crash protection'' (49 CFR 571.208), requires passenger vehicles to be equipped with safety belts and frontal air bags for the protection of vehicle occupants in crashes. While air bags have been very effective in protecting people in moderate and high speed frontal crashes, there have been instances in which they have caused serious or fatal injuries to occupants who were very close to the air bag when it deployed. On May 12, 2000, NHTSA published a final rule to require that future air bags be designed to create less risk of serious air bag-induced injuries than current air bags and provide improved frontal crash protection for all occupants, by means that include advanced air bag technology (''Advanced Air Bag Rule,'' 65 FR 30680, Docket No. NHTSA 00–7013). Under that Advanced Air Bag Rule, manufacturers are provided several compliance options in order to minimize the risk to infants and small children from deploying air bags, including an option to suppress an air bag in the presence of a child restraint system (CRS).

To ensure the robustness of automatic suppression systems, NHTSA tests an air bag suppression system under conditions representative of real world use. Manufacturers choosing to rely on an air bag suppression system to minimize the risk to children in a CRS must ensure that the vehicle complies with the suppression requirements when tested with the CRSs specified in Appendix A of the standard (*see* S19, S21 and S23 of FMVSS No. 208).

On November 19, 2003, we revised Appendix A by adding two CRSs that are equipped with components that attach to a vehicle's LATCH [1] system (68 FR 65179, Docket No. NHTSA 03–16476). Since September 1, 2002, CRSs have been required by FMVSS No. 213, *Child restraint systems* (49 CFR 571.213), to have permanently-attached components that enable the CRS to connect to a LATCH system on a vehicle. The addition of these ''LATCH-equipped'' CRSs to Appendix A kept the appendix up-to-date in reflecting current CRS designs.[2]

FMVSS No. 208 currently states that the CRS manufacturer's installation instructions are to be used when installing a LATCH-equipped CRS into a vehicle for suppression testing. It does not provide a specific procedure apart from these instructions. Today's NPRM proposes a specific procedure, which we have tentatively determined to provide a repeatable and reproducible installation of LATCH-equipped CRSs. The procedure is based on real-world installations of CRSs and is consistent with CRS manufacturers' instructions.

II. Proposed Test Procedures

There are two types of LATCH-equipped CRSs. One type is composed of CRSs that have the LATCH components attached to them by use of flexible belt webbing (for purposes of this NPRM, we refer to child restraints that use the flexible means of attachment as ''flexible LATCH CRSs''). The other type is comprised of CRSs that use a rigid ratchet mechanism built into the CRS (''rigid LATCH CRSs''). This NPRM proposes procedures for attaching both types of CRSs to the vehicle's LATCH system.

Test Procedure for Flexible LATCH CRSs

The test procedure for flexible LATCH CRSs uses a loading device that enables a consistent means of installing the restraints. (A schematic of the device accompanies the proposed regulatory text.) Under the proposed procedure, a flexible LATCH CRS is centered between the seat's two lower LATCH anchor bars and the CRS LATCH is connected to the anchor bars with slack in the straps. The loading device, consisting of a loading bar, load cell, and loading bar foot, is placed at the CRS seat bight (the intersection of the CRS seat cushion and seat back) at an angle of 15 ± 3 degrees from vertical.

[1] ''LATCH'' stands for ''Lower Anchors and Tethers for Children,'' a term that was developed by child restraint manufacturers and retailers to refer to the standardized child restraint anchorage system that vehicle manufacturers must install in vehicles pursuant to FMVSS No. 225, *Child Restraint Anchorage Systems* (49 CFR 571.225). The LATCH system is comprised of two lower anchorages and one tether anchorage. Each lower anchorage is a rigid round rod or bar onto which the connector of a child restraint system can be attached. FMVSS No. 225 does not permit vehicle manufacturers to install LATCH systems in front designated seating positions unless the vehicle has an air bag on-off switch meeting the requirements of S4.5.4 of FMVSS No. 208.

[2] On August 20, 2004, the agency extended the compliance date (from September 1, 2004 to September 1, 2006) on which manufacturers must certify to requirements with the LATCH-equipped CRSs installed on a LATCH system (69 FR 51598; Docket No. NHTSA 2004–18905).

The device applies a load to the CRS, replicating installers using their weight to install a CRS. The loading device first applies a preload of 50 to 100 Newtons (N) to the CRS, which is then increased to 875 ± 10 N. After the load settles to between 845 and 855 N, the flexible LATCH straps, already attached to the anchor bars but not yet in tension, are manually tightened such that the change in the preload is not more than 25 N.[3]

The procedure was developed by NHTSA to replicate real-world CRS installations in vehicles by experienced installers, particularly with respect to the appropriate load vector to be applied and the amount of load relief when LATCH belts are manually tightened. The procedure was developed using four installers[4] working with three vehicles and four CRSs. The vehicles used were: (a) The 2003 GMC Sierra Regular Cab C1500 Truck, certified to the advanced air bag requirements; (b) the 2003 Toyota Tacoma regular Cab Truck, certified with depowered air bags; and (c) the 2004 Ford F150 Regular Cab Truck, certified to the advanced air bag requirements. The CRSs used were: (a) The Cosco Forerunner convertible child restraint; (b) the Cosco Alpha-Omega convertible child restraint; (c) the Graco SnugRide rear-facing child restraint; and (d) the Britax Expressway convertible child restraint. A memorandum describing development of the procedure has been placed in the docket for this rulemaking.[5]

Agency tests demonstrated that the proposed procedure results in a CRS installation representative of a real-world installation. The distance of a target on the side of the CRS to the LATCH anchor bars was measured to determine the positioning of the CRS after various installations. There was no statistical difference in the test results between the installations made by technicians using the test procedure and the real-world installations of the installers that had not used the procedure. When the loading device and test procedure were used by individual technicians, a similar level of positioning repeatability was achieved as by any single installer without the device and procedure.

Each CRS was installed with the loading device according the proposed procedure two times in the GMC Sierra. The Britax Expressway was installed twice using the procedure in the Ford F150 and the Toyota Tacoma. The Cosco Forerunner and the Graco Snugride each were installed two times in the Toyota Tacoma. When installations of the same CRS model in the same vehicle were evaluated, the CRSs were installed comparably, and consistent air bag suppression status was achieved in all but one instance. The exception was the installation of the Britax Expressway in the GMC Sierra, which resulted in a suppressed air bag in one trial and a failed suppression in a second trial. This same phenomenon occurred with one of the certified installers not using the device. Thus, we believe that the difference in air bag suppression status was a reflection of the characteristics of the suppression system rather than that of the repeatability of the test procedure.

As a result of testing we tentatively conclude that:

- Installing a CRS with the test device results in a CRS installation reflective of real-world installation by experienced CRS installers;
- Installing a CRS with the test device results in a repeatable installation independent of the installer; and
- Installing a CRS with the test device can result in a suppression system test failure representative of real-world use.

Test Procedure for Rigid LATCH CRS System

Rigid LATCH CRS systems typically have a ratchet mechanism built into a rigid structure to obtain a tight/snug fit between the CRS and the vehicle seat. Because flexible webbing material is not used to attach the LATCH components, rigid LATCH CRSs limit the potential variability in installation. They also do not exhibit the tendency of flexible LATCH CRSs to load the vehicle seat cushion with a distinct downward force that some suppression systems have interpreted as being generated by an adult occupant. As such, a test matrix was not needed to develop an installation procedure for rigid LATCH CRS systems.

In the proposed installation procedure for rigid LATCH CRSs, the rigid LATCH CRSs would be centered in a vehicle seat, as in the flexible LATCH CRS procedure. The lower anchor attachments would then be connected to the vehicle's anchor bars pursuant to the CRS manufacturer's instruction. The CRS would be moved rearward until it contacted the vehicle seat back. If the CRS were equipped with a linear sliding or ratcheting mechanism that requires the application of force to securely install the CRS, a force of 600 N would be applied to the CRS in a plane parallel to the plane formed by the linear mechanism. The load would then be removed and the suppression test performed.

III. Benefits and Costs

The proposed amendment to FMVSS No. 208 would not establish new performance criteria but would instead provide a developed procedure for demonstrating compliance with existing requirements. This document proposes a specific procedure that we have tentatively determined to provide a repeatable and reproducible installation of LATCH-equipped CRSs.

We do not require manufacturers to use the test device or the procedure. This NPRM proposes to specify how NHTSA would conduct that aspect of the suppression test that involves attaching the CRS to the vehicle's LATCH system. For manufacturers that wish to use the test procedure in testing their vehicles, the test device described in the proposed amendment would result in a negligible cost to vehicle manufacturers and testing laboratories. The agency constructed the device with load cells commonly relied upon in vehicle testing and less than fifty dollars worth of supplies.

IV. Effective Date of the Proposed Rule

If made final, this rule would become effective 60 days following its publication. However, compliance testing based on these procedures would not apply to vehicles manufactured before September 1, 2006. Vehicles manufactured on or after September 1, 2006, are tested for compliance with the Advanced Air Bag Rule suppression requirements using LATCH-equipped CRSs installed using the LATCH configuration. See Appendix A, FMVSS No. 208. In such tests, the proposed procedure for attaching the CRS to the LATCH system would be used.

V. Request for Comments

How Do I Prepare and Submit Comments?

Your comments must be written and in English. To ensure that your comments are correctly filed in the Docket, please include the docket number of this document in your comments.

Your comments must not be more than 15 pages long. (49 CFR 553.21). We established this limit to encourage you

[3] To replicate a common misuse condition, the top tether of the CRS is not attached.

[4] All four installers were practiced with the installation of the CRSs. Two of the installers were certified Child Passenger Safety Technicians. We used experienced installers because we wanted to achieve a secure, ''tight'' installation of the CRS on the LATCH system. A tight installation of a CRS, which is the installation that caregivers seek to achieve, is more likely to be read by some suppression systems as an adult occupying the seating position than an installation that is less tight.

[5] Test Report—FMVSS No. 208, LATCH Equipped Child Restraint Installation Procedure, June 22, 2004.

to write your primary comments in a concise fashion. However, you may attach necessary additional documents to your comments. There is no limit on the length of the attachments.

Please submit two copies of your comments, including the attachments, to Docket Management at the address given above under **ADDRESSES**.

Comments may also be submitted to the docket electronically by logging onto the Docket Management System Web site at *http://dms.dot.gov.* Click on ''Help & Information'' or ''Help/Info'' to obtain instructions for filing the document electronically. If you are submitting comments electronically as a PDF (Adobe) file, we ask that the documents submitted be scanned using Optical Character Recognition (OCR) process, thus allowing the agency to search and copy certain portions of your submissions.[6]

Please note that pursuant to the Data Quality Act, in order for substantive data to be relied upon and used by the agency, it must meet the information quality standards set forth in the OMB and DOT Data Quality Act guidelines. Accordingly, we encourage you to consult the guidelines in preparing your comments. OMB's guidelines may be accessed at *http://www.whitehouse.gov/omb/fedreg/reproducible.html.* DOT's guidelines may be accessed at *http://dmses.dot.gov/submit/DataQualityGuidelines.pdf.*

How Can I Be Sure That My Comments Were Received?

If you wish Docket Management to notify you upon its receipt of your comments, enclose a self-addressed, stamped postcard in the envelope containing your comments. Upon receiving your comments, Docket Management will return the postcard by mail.

How Do I Submit Confidential Business Information?

If you wish to submit any information under a claim of confidentiality, you should submit three copies of your complete submission, including the information you claim to be confidential business information, to the Chief Counsel, NHTSA, at the address given above under **FOR FURTHER INFORMATION CONTACT.** In addition, you should submit two copies, from which you have deleted the claimed confidential business information, to Docket Management at the address given above under **ADDRESSES.** When you send a comment containing information claimed to be confidential business information, you should include a cover letter setting forth the information specified in our confidential business information regulation. (49 CFR Part 512.)

Will the Agency Consider Late Comments?

We will consider all comments that Docket Management receives before the close of business on the comment closing date indicated above under **DATES.** To the extent possible, we will also consider comments that Docket Management receives after that date. If Docket Management receives a comment too late for us to consider in developing a final rule (assuming that one is issued), we will consider that comment as an informal suggestion for future rulemaking action.

How Can I Read the Comments Submitted By Other People?

You may read the comments received by Docket Management at the address given above under **ADDRESSES.** The hours of the Docket are indicated above in the same location. You may also see the comments on the Internet. To read the comments on the Internet, take the following steps:

(1) Go to the Docket Management System (DMS) Web page of the Department of Transportation *(http://dms.dot.gov/).*

(2) On that page, click on ''Simple Search.''

(3) On the next page *(http://dms.dot.gov/search/),* type in the four-digit docket number shown at the beginning of this document. Example: If the docket number were ''NHTSA–1998–1234,'' you would type ''1234.'' After typing the docket number, click on ''Search.''

(4) On the next page, which contains docket summary information for the docket you selected, click on the desired comments. You may download the comments. However, since the comments are imaged documents, instead of word processing documents, the downloaded comments are not word searchable.

Please note that even after the comment closing date, we will continue to file relevant information in the Docket as it becomes available. Further, some people may submit late comments. Accordingly, we recommend that you periodically check the Docket for new material.

VI. Rulemaking Analyses and Notices

A. Executive Order 12866 and DOT Regulatory Policies and Procedures

Executive Order 12866, ''Regulatory Planning and Review'' (58 FR 51735, October 4, 1993), provides for making determinations whether a regulatory action is ''significant'' and therefore subject to Office of Management and Budget (OMB) review and to the requirements of the Executive Order. The Order defines a ''significant regulatory action'' as one that is likely to result in a rule that may:

(1) Have an annual effect on the economy of $100 million or more or adversely affect in a material way the economy, a sector of the economy, productivity, competition, jobs, the environment, public health or safety, or State, local, or Tribal governments or communities;

(2) Create a serious inconsistency or otherwise interfere with an action taken or planned by another agency;

(3) Materially alter the budget impact of entitlements, grants, user fees, or loan programs or the rights and obligations of recipients thereof; or

(4) Raise novel legal or policy issues arising out of legal mandates, the President's priorities, or the principles set forth in the Executive Order.

This rulemaking document was not reviewed by the Office of Management and Budget under E.O. 12866. It is not considered to be significant under E.O. 12866 or the Department's Regulatory Policies and Procedures (44 FR 11034; February 26, 1979).

This document proposes to amend 49 CFR 571.208 by incorporating a procedure for installing LATCH equipped CRSs in order to demonstrate compliance with the advanced air bag requirements. The equipment necessary for the procedure would cost vehicle manufacturers and testing laboratories less than $50 and would provide a repeatable and reproducible method for installing LATCH equipped CRSs in a manner representative of real world use.

B. Regulatory Flexibility Act

In compliance with the Regulatory Flexibility Act, 5 U.S.C. 601 *et seq.*, NHTSA has evaluated the effects of this proposed action on small entities. I hereby certify that this notice of proposed rulemaking would not have a significant impact on a substantial number of small entities.

The following is the agency's statement providing the factual basis for the certification (5 U.S.C. 605(b)). If adopted, the proposal would directly affect motor vehicle manufacturers,

[6] Optical character recognition (OCR) is the process of converting an image of text, such as a scanned paper document or electronic fax file, into computer-editble text.

second stage or final stage manufacturers, and alterers.

The majority of motor vehicle manufacturers would not qualify as a small business. These manufacturers, along with manufacturers that do qualify as a small business, are already required to comply with the advanced air bag requirements. This proposal would not establish new requirements, but instead provide specific procedures to demonstrate compliance with existing requirements.

C. Executive Order No. 13132

NHTSA has analyzed this proposed rule in accordance with the principles and criteria set forth in Executive Order 13132, Federalism and has determined that this proposal does not have sufficient Federal implications to warrant consultation with State and local officials or the preparation of a Federalism summary impact statement. The proposal would not have any substantial impact on the States, or on the current Federal-State relationship, or on the current distribution of power and responsibilities among the various local officials.

D. National Environmental Policy Act

NHTSA has analyzed this proposal for the purposes of the National Environmental Policy Act. The agency has determined that implementation of this action would not have any significant impact on the quality of the human environment.

E. Paperwork Reduction Act

Under the new procedures established by the Paperwork Reduction Act of 1995, a person is not required to respond to a collection of information by a Federal agency unless the collection displays a valid OMB control number.

F. National Technology Transfer and Advancement Act

Under the National Technology Transfer and Advancement Act of 1995 (NTTAA) (Pub. L. 104–113), ''all Federal agencies and departments shall use technical standards that are developed or adopted by voluntary consensus standards bodies, using such technical standards as a means to carry out policy objectives or activities determined by the agencies and departments.'' The agency searched for, but did not find any voluntary consensus standards that addressed the installation of LATCH-equipped CRSs.

G. Civil Justice Reform

This proposal would not have any retroactive effect. Under 49 U.S.C. 21403, whenever a Federal motor vehicle safety standard is in effect, a State may not adopt or maintain a safety standard applicable to the same aspect of performance which is not identical to the Federal standard, except to the extent that the state requirement imposes a higher level of performance and applies only to vehicles procured for the State's use. 49 U.S.C. 21461 sets forth a procedure for judicial review of final rules establishing, amending or revoking Federal motor vehicle safety standards. That section does not require submission of a petition for reconsideration or other administrative proceedings before parties may file suit in court.

H. Unfunded Mandates Reform Act

The Unfunded Mandates Reform Act of 1995 requires agencies to prepare a written assessment of the costs, benefits and other effects of proposed or final rules that include a Federal mandate likely to result in the expenditure by State, local or tribal governments, in the aggregate, or by the private sector, of more than $100 million annually (adjusted for inflation with base year of 1995). This rulemaking would not result in expenditures by State, local or tribal governments, in the aggregate, or by the private sector in excess of $100 million annually.

I. Executive Order 13045

Executive Order 13045 (62 FR 19885, April 23, 1997) applies to any rule that: (1) Is determined to be ''economically significant'' as defined under E.O. 12866, and (2) concerns an environmental, health, or safety risk that NHTSA has reason to believe may have a disproportionate effect on children. If the regulatory action meets both criteria, we must evaluate the environmental health or safety effects of the planned rule on children, and explain why the planned regulation is preferable to other potentially effective and reasonably feasible alternatives considered by us.

This proposed rule is not subject to the Executive Order because it is not economically significant as defined in E.O. 12866.

J. Executive Order 13211

Executive Order 13211 (66 FR 28355, May 18, 2001) applies to any rule that: (1) Is determined to be economically significant as defined under E.O. 12866, and is likely to have a significantly adverse effect on the supply of, distribution of, or use of energy; or (2) that is designated by the Administrator of the Office of Information and Regulatory Affairs as a significant energy action. If made final, this rulemaking would provide a compliance procedure for an existing motor vehicle safety requirement. Therefore this proposal was not analyzed under E.O. 13211.

K. Plain Language

Executive Order 12866 and the President's memorandum of June 1, 1998, require each agency to write all rules in plain language. Application of the principles of plain language includes consideration of the following questions:

- Have we organized the material to suit the public's needs?
- Are the requirements in the rule clearly stated?
- Does the rule contain technical language or jargon that isn't clear?
- Would a different format (grouping and order of sections, use of headings, paragraphing) make the rule easier to understand?
- Would more (but shorter) sections be better?
- Could we improve clarity by adding tables, lists, or diagrams?
- What else could we do to make the rule easier to understand?

If you have any responses to these questions, please include them in your comments on this proposal.

L. Regulation Identifier Number (RIN)

The Department of Transportation assigns a regulation identifier number (RIN) to each regulatory action listed in the Unified Agenda of Federal Regulations. The Regulatory Information Service Center publishes the Unified Agenda in April and October of each year. You may use the RIN contained in the heading at the beginning of this document to find this action in the Unified Agenda.

M. Privacy Act

Anyone is able to search the electronic form of all comments received into any of our dockets by the name of the individual submitting the comment (or signing the comment, if submitted on behalf of an association, business, labor union, etc.). You may review DOT's complete Privacy Act Statement in the **Federal Register** published on April 11, 2000 (Volume 65, Number 70; Pages 19477–78) or you may visit *http://dms.dot.gov.*

List of Subjects in 49 CFR Part 571

Imports, Motor vehicle safety, Motor vehicles, and Tires.

In consideration of the foregoing, NHTSA proposes to amend 49 CFR Part 571 as set forth below.

PART 571—FEDERAL MOTOR VEHICLE SAFETY STANDARDS

1. The authority citation for Part 571 would continue to read as follows:

Authority: 49 U.S.C. 322, 30111, 30115, 30117 and 30166; delegation of authority at 49 CFR 1.50.

2. Section 571.208 would be amended by:

a. Revising S20.2.1.1 through S20.2.1.5, S20.4.6, S22.2.1, S22.2.1.4, S22.2.1.5, S22.2.1.6 through S22.2.1.6.2, S22.2.1.7, S22.2.1.8, S24.2, S24.2.2, and the introductory text of Section C of Appendix A;

b. Adding S20.2.1.6, S20.2.1.6.1, S20.2.1.6.2, S22.2.1.7.1 through S22.2.1.7.3, S22.2.1.8.1 through S22.2.1.8.4, Figures A1 and A2 at the end of Appendix A; and

c. Removing S22.2.1.5.1, S22.2.1.5.2, S22.2.1.5.3, S22.2.1.6.3, S22.2.1.6.4, to read as follows:

§ 571.208 Standard No. 208; Occupant crash protection.

* * * * *

S20.2.1.1 The vehicle shall comply in tests using any child restraint specified in section B and section C of Appendix A of this standard, installed in the front outboard passenger vehicle seat in the following orientations:

(a) With the section B and section C child restraints facing rearward as appropriate; and

(b) With the section C child restraints facing forward.

S20.2.1.2 The vehicle shall comply with the child restraint attached to the vehicle in the following manner:

(a) Using the vehicle safety belts as specified in S20.2.1.5; and

(b) If the child restraint is certified to S5.9 of FMVSS No. 213, and the vehicle seat has an anchorage system as specified in FMVSS No. 225, using only the mechanism provided by the child restraint manufacturer for attachment to the lower anchorages as specified in S20.2.1.6.

S20.2.1.3 Locate a vertical plane through the longitudinal centerline of the child restraint. This will be referred to as ''Plane A.''

S20.2.1.4 For bucket seats, ''Plane B'' refers to a vertical plane parallel to the vehicle longitudinal centerline through the longitudinal centerline of the front outboard passenger vehicle seat cushion. For bench seats, ''Plane B'' refers to a vertical plane through the front outboard passenger vehicle seat parallel to the vehicle longitudinal centerline the same distance from the longitudinal centerline of the vehicle as the center of the steering wheel.

S20.2.1.5 *Installation with vehicle safety belts.*

(a) Place any adjustable seat belt anchorages at the vehicle manufacturer's nominal design position for a 50th percentile adult male occupant.

(b) Without attaching the child restraint anchorage system as specified in S5.9 of FMVSS No. 213 to a vehicle seat anchorage system specified in FMVSS No. 225, align the child restraint system facing rearward or forward, depending on the orientation being tested, such that Plane A is aligned with Plane B.

(c) While maintaining the child restraint positions achieved in S20.2.1.5(b), secure the child restraint by following, to the extent possible, the child restraint manufacturer's directions regarding proper installation of the restraint for the orientation being tested. Cinch the vehicle belts to any tension from zero up to 134 N to secure the child restraint. Measure belt tension in a flat, straight section of the lap belt between the child restraint belt path and the contact point with the belt anchor or vehicle seat, on the side away from the buckle (to avoid interference from the shoulder portion of the belt).

(d) Position the 49 CFR part 572 subpart R 12-month-old CRABI dummy in the child restraint by following, to the extent possible, the manufacturer's instructions provided with the child restraint for seating infants.

(e) Start the vehicle engine or place the ignition in the ''on'' position, whichever will turn on the suppression system, and close all vehicle doors. Wait 10 seconds, then check whether the air bag is deactivated.

S20.2.1.6 *Installation using the lower anchor bars and the child restraint manufacturer provided attachment mechanism.*

S20.2.1.6.1 If the attachment mechanism provided by the manufacturer incorporates a strap(s), use the following procedure:

(a) Place the child restraint on the vehicle seat facing rearward or forward, depending on the orientation being tested, with Plane A of the child restraint aligned within ± 10 mm with a longitudinal vertical plane passing though a point midway between the centers of the two lower anchor bars.

(b) Position any adjustments on the child restraint, to the extent possible according to the child restraint manufacturer's instructions.

(c) Move the child restraint rearward until it contacts the seat back.

(d) Connect the lower anchor straps of the restraint to the lower anchor bars of the seat and remove the slack, but do not apply any load using these straps.

(e) Use the loading device equipped with the loading foot shown in Figure A1 and position it as shown in Figure A2 of Appendix A of this standard. The 15 ± 3 degree angle of the loading device illustrated in Figure A2 is determined with an initial preload of 75 ± 25N.

(f) In 90 ± 30 seconds, increase the preload to 875N ± 10N.

(g) Observe the settling of the preload and tighten the lower anchor straps when the preload is 850 ± 5N. Tighten the lower anchor straps at the same time such that the load is reduced 15 ± 10N and the change occurs within 2 seconds.

(h) Remove the loading device and position the 49 CFR part 572 subpart R 12-month-old CRABI dummy in the child restraint by following, to the extent possible, the manufacturer's instructions provided with the child restraint for seating infants.

(i) Start the vehicle engine or place the ignition in the ''on'' position, whichever will turn on the suppression system, and close all vehicle doors. Wait 10 seconds, then check whether the air bag is deactivated.

S20.2.1.6.2 If the mechanism provided by the manufacturer does not incorporate a strap(s), use the following procedure:

(a) Place the child restraint on the vehicle seat facing rearward or forward, depending on the orientation being tested, with Plane A of the child restraint aligned within ± 10 mm with a longitudinal vertical plane passing though a point midway between the centers of the two lower anchor bars.

(b) Position any adjustments on the child restraint, to the extent possible, according to the child restraint manufacturer's instructions.

(c) Connect the lower anchor attachments to the lower anchor bars following, to the extent possible, the child restraint manufacturer's instructions.

(e) Move the child restraint rearward until it contacts the seat back.

(f) If the child restraint does not use a linear sliding or ratcheting mechanism that requires the application of force to securely install the child restraint, follow, to the extent possible, the CRS manufacturer's instructions for installing the child restraint onto the seat. Do not load the seat as provided in S20.2.1.6.2(g).

(g) If the child restraint uses a linear sliding or ratcheting mechanism that requires the application of force to securely install the child restraint, in 25 ± 5 seconds, apply a 600N force, that has no lateral component, in a plane located within +/− 100 mm and parallel with the plane formed by the linear mechanism. The force shall be in

the same direction as the motion of the mechanism. Release the force.

(h) Position the 49 CFR part 572 subpart R 12-month-old CRABI dummy in the child restraint by following, to the extent possible, the manufacturer's instructions provided with the child restraint for seating infants.

(i) Start the vehicle engine or place the ignition in the ''on'' position, whichever will turn on the suppression system, and close all vehicle doors. Wait 10 seconds, then check whether the air bag is deactivated.

* * * * *

S20.4.6 If the child restraint is certified to S5.9 of §571.213, and the vehicle seat has an anchorage system as specified in §571.225, attach the child restraint to the vehicle seat anchorage as specified in S20.2.1.6. Do not attach the vehicle safety belt.

* * * * *

22.2.1 *Belted test with forward facing or booster seat child restraint.*

* * * * *

S22.2.1.4 The vehicle shall comply with the child restraint belted to the vehicle in the following manner:

(a) Using the vehicle safety belts as specified in S22.2.1.5 with section C and section D child restraints of Appendix A of this standard designed to be secured to the vehicle seat even when empty; and

(b) If the child restraint is certified to S5.9 of §571.213, and the vehicle seat has an anchorage system as specified in §571.225, using only the mechanism provide by the child restraint manufacturer for attachment to the lower anchorage as specified in S22.2.1.6.

S22.2.1.5 *Installation with vehicle safety belts.*

(a) Place any adjustable seat belt anchorages at the vehicle manufacturer's nominal design position for a 50th percentile adult male occupant.

(b) Without attaching the child restraint anchorage system as specified in S5.9 of §571.213 to a vehicle seat anchorage system specified in §571.225, align the child restraint system facing forward, such that Plane A is aligned with Plane B.

(c) While maintaining the child restraint positions achieved in S22.2.1.5(b), secure the child restraint by following, to the extent possible, the child restraint manufacturer's directions regarding proper installation of the restraint. Cinch the vehicle belts to any tension from zero up to 134 N to secure the child restraint. Measure belt tension in a flat, straight section of the lap belt between the child restraint belt path and the contact point with the belt anchor or vehicle seat, on the side away from the buckle (to avoid interference from the shoulder portion of the belt).

S22.2.1.6 *Installation using the lower anchor bars and the child restraint manufacturer provided attachment mechanism.*

S22.2.1.6.1 If the mechanism provided by the manufacturer incorporates a strap(s), use the following procedure.

(a) Place the child restraint on the vehicle seat facing forward, with Plane A of the child restraint aligned within ± 10 mm with a longitudinal vertical plane passing though a point midway between the centers of the two lower anchor bars.

(b) Position any adjustments on the child restraint, to the extent possible, according to the child restraint manufacturer's instructions.

(c) Move the child restraint rearward until it contacts the seat back.

(d) Connect the lower anchor straps to the lower anchor bars and remove most of the slack, but do not apply any load using these straps.

(e) Do not attach any tethers.

(f) Use the loading device equipped with the loading foot shown in Figure A1 and position it as shown in Figure A2 of Appendix A of this standard. The 15 ± 3 degree angle of the loading device is determined with an initial preload of 50 to 100 N.

(g) In 90 ± 30 seconds, increase the preload to 875N ± 10N.

(h) Observe the settling of the preload and tighten the lower anchor straps when the preload is 850 ± 5N. Tighten the lower anchor straps at the same time such that the load is reduced 15 ± 10N and the change occurs within 2 seconds.

(i) Remove the loading device.

S22.2.1.6.2 If the mechanism provided by the manufacturer does not incorporate a strap(s), use the following procedure.

(a) Place the child restraint on the vehicle seat facing forward with Plane A of the child restraint aligned within ± 10 mm with a longitudinal vertical plane passing though a point midway between the centers of the two lower anchor bars.

(b) Position any adjustments on the child restraint, to the extent possible, according to the child restraint manufacturer's instructions.

(c) Connect the lower anchor attachments to the lower anchor bars following, to the extent possible, the child restraint manufacturer's instructions.

(d) Move the child restraint rearward until it contacts the seat back.

(e) Do not attach any tethers.

(f) If the child restraint does not use a linear sliding or ratcheting mechanism that requires the application of force to securely install the child restraint, follow, to the extent possible, the manufacturer's instructions for installing the child restraint onto the seat. Do not load the seat as provided in S20.2.1.6.2(f).

(g) If the child restraint uses a linear sliding or ratcheting mechanism that requires the application of force to securely install the child restraint, in 25 ± 5 seconds, apply a 600N force, that has no lateral component, in a parallel plane located within ±100 mm of the plane formed by the linear mechanism. Release the force.

S22.2.1.7 *Forward facing child restraint.*

S22.2.1.7.1 After installation of a forward facing child restraint, position the 49 CFR part 572 subpart P 3-year-old child dummy in the child restraint such that the dummy's lower torso is centered on the child restraint and the dummy's spine is against the seat back of the child restraint. Place the arms at the dummy's sides.

S22.2.1.7.2 Attach all belts that come with the child restraint that are appropriate for a child of the same height and weight as the 3-year-old child dummy, if any, by following, to the extent possible, the manufacturer's instructions provided with the child restraint for seating children.

S22.2.1.7.3 Start the vehicle engine or place the ignition in the ''on'' position, whichever will turn on the suppression system, and close all vehicle doors. Wait 10 seconds, then check whether the air bag is deactivated.

S22.2.1.8 *Booster seat child restraint.*

S22.2.1.8.1 After installation of a booster seat child restraint, position the 49 CFR part 572 subpart P 3-year-old child dummy in the booster seat such that the dummy's lower torso is centered on the booster seat cushion and the dummy's back is parallel to and in contact with the booster seat back or, if there is no booster seat back, the vehicle seat back. Place the arms at the dummy's sides.

S22.2.1.8.2 If applicable, attach all belts that come with the child restraint that are appropriate for a child of the same height and weight as the 3-year-old child dummy, if any, by following, to the extent possible, the manufacturer's instructions provided with the child restraint for seating children.

S22.2.1.8.3 If applicable, place the Type 2 manual belt around the test dummy and fasten the latch. Remove all slack from the lap belt portion. Pull the upper torso webbing out of the retractor and allow it to retract; repeat this four

times. Apply a 9 to 18 N (2 to 4 lb) tension load to the lap belt. Allow the excess webbing in the upper torso belt to be retracted by the retractive force of the retractor.

S22.2.1.8.4 Start the vehicle engine or place the ignition in the ''on'' position, whichever will turn on the suppression system, and then close all vehicle doors. Wait 10 seconds, then check whether the air bag is deactivated.

* * * * *

S24.2 *Static tests of automatic suppression feature which shall result in deactivation of the passenger air bag.* Each vehicle that is certified as complying with S23.2 of FMVSS No. 208 shall meet the following test requirements with the child restraint in the front outboard passenger vehicle seat under the following conditions:

(a) Using the vehicle safety belts as specified in S22.2.1.5 with section D child restraints designed to be secured to the vehicle seat even when empty;

(b) If the child restraint is certified to S5.9 of §571.213, and the vehicle seat has an anchorage system as specified in §571.225, using only the mechanism provide by the child restraint manufacturer for attachment to the lower anchorage as specified in S22.2.1.6; and

(c) Without securing the child restraint with either the vehicle safety belts or any mechanism provided with a child restraint certified to S5.9 of §571.213.

* * * * *

S24.2.2 *Exceptions.* The tests specified in the following paragraphs of S22.2 need not be conducted: S22.2.1.7, S22.2.2.3, S22.2.2.5, S22.2.2.6, S22.2.2.7, and S22.2.2.8.

* * * * *

Appendix A to § 571.208

* * * * *

C. Any of the following forward facing toddler and forward-facing convertible child restraint systems, manufactured on or after December 1, 1999, may be used by the National Highway Traffic Safety Administration to test the suppression system of a vehicle that is manufactured on or after the effective date and prior to the termination date specified in the table below and that has been certified as being in compliance with 49 CFR 571.208 S19, or S21. (**Note:** Any child restraint listed in this subpart that is not recommended for use in a rear-facing position by its manufacturer is excluded from use in testing in a belted rear-facing configuration under S20.2.1.1(a)):

* * * * *

BILLING CODE 4910–59–P

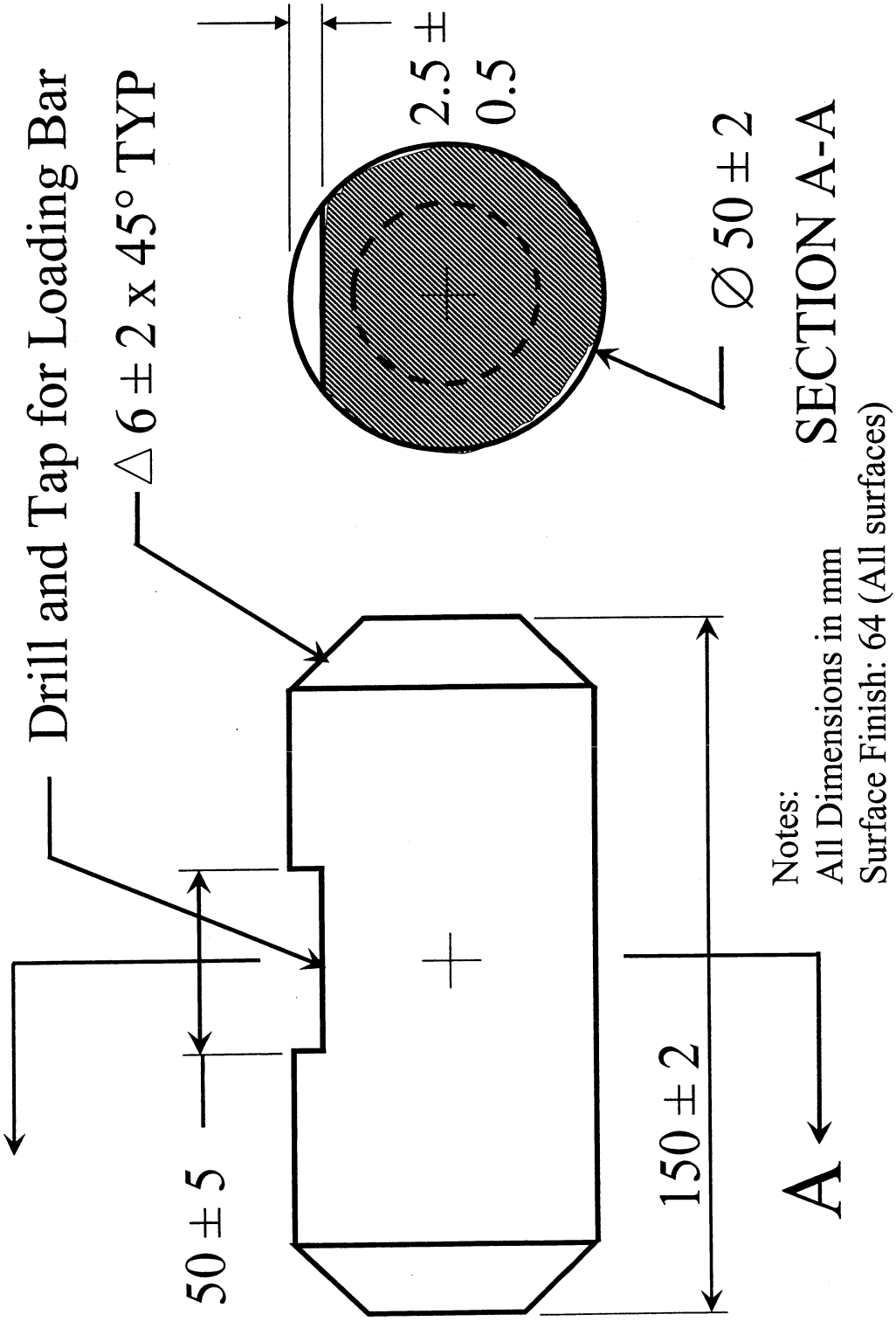

Notes:
All Dimensions in mm
Surface Finish: 64 (All surfaces)

Figure A1 - Loading Bar Foot

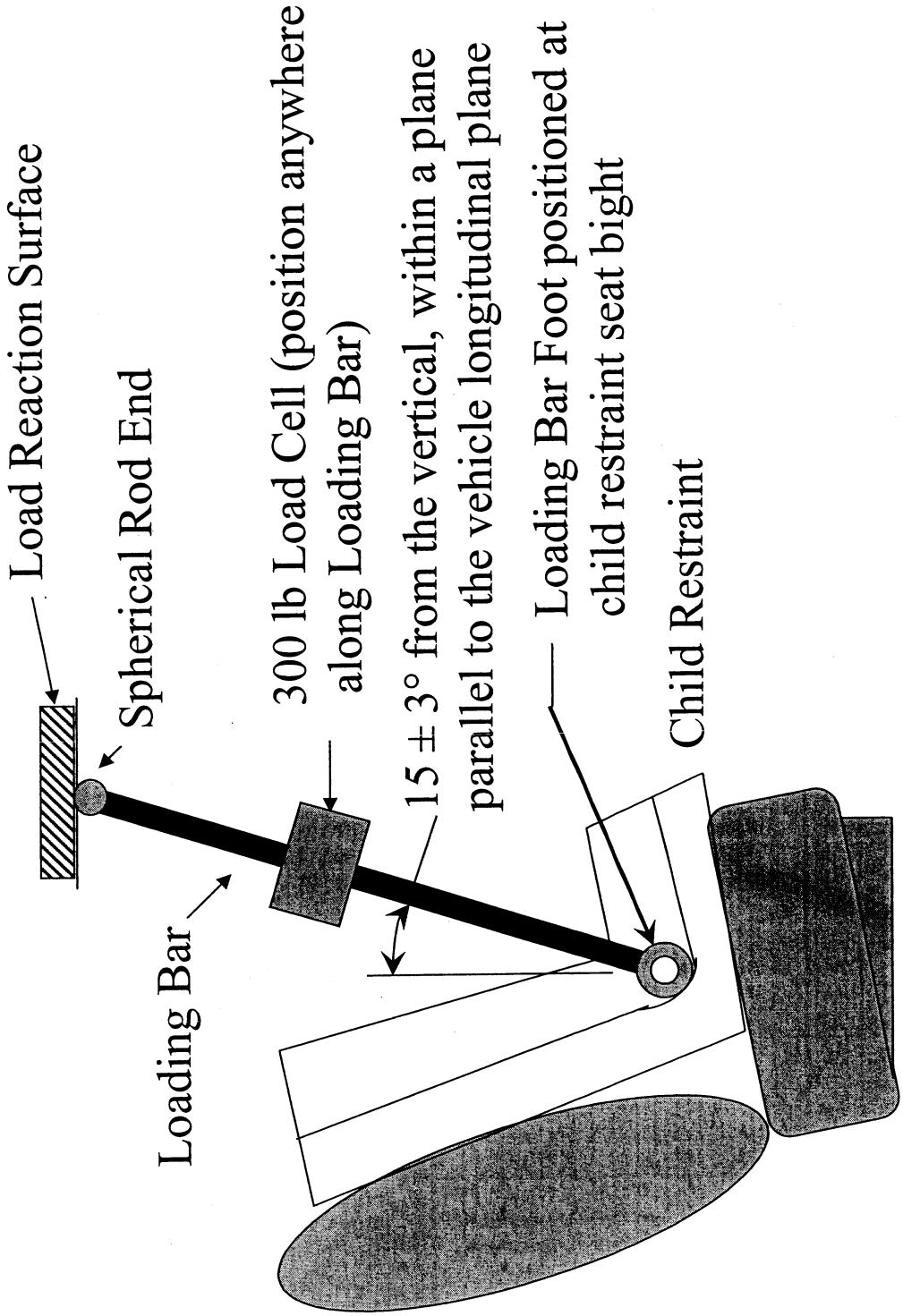

Figure A2 – Loading Bar Installation

Issued on May 10, 2005.

Stephen R. Kratzke,

Associate Administrator for Rulemaking.

[FR Doc. 05–9924 Filed 5–18–05; 8:45 am]

BILLING CODE 4910–59–C

DEPARTMENT OF TRANSPORTATION

National Highway Traffic Safety Administration

49 CFR Part 571

[Docket No. NHTSA–2005–20967]

Federal Motor Vehicle Safety Standards

AGENCY: National Highway Traffic Safety Administration (NHTSA), Department of Transportation (DOT).

ACTION: Denial of petition for rulemaking.

SUMMARY: This document denies a petition from the Rubber Manufacturers Association (RMA) to conduct rulemaking to amend the Federal motor vehicle safety standard on tire selection and rims to require manufacturers of new motor vehicles to establish a recommended cold inflation pressure (placard pressure) for their vehicles using a tire pressure reserve. The tire pressure reserve would be based on the minimum pressure the RMA believes is necessary to support the vehicle's maximum load at the activation pressure of the installed tire pressure monitoring system (TPMS). The agency has decided to deny the petition because neither the RMA's nor the agency's data demonstrate a safety need for such a requirement.

FOR FURTHER INFORMATION CONTACT: The following persons at the National Highway Traffic Safety Administration, 400 Seventh Street, SW., Washington, DC, 20590: For technical issues: Mr. George Soodoo or Mr. Ezana Wondimneh, Office of Crash Avoidance Standards (Telephone: 202–366–2720) (Fax: 202–366–7002). For legal issues: Mr. Eric Stas, Office of the Chief Counsel (Telephone: 202–366–2992) (Fax: 202–366–3820).

SUPPLEMENTARY INFORMATION:

I. Executive Summary

A. The RMA's Petition

The Rubber Manufacturers Association [1] submitted a petition for rulemaking [2] to NHTSA to amend Federal Motor Vehicle Safety Standard (FMVSS) No. 110, Tire Selection and Rims, to include a tire pressure reserve sufficient to permit the tires to carry the vehicle maximum load at the threshold activation pressure for illumination of the low tire pressure telltale (a lighted indicator) under FMVSS No. 138, Tire Pressure Monitoring Systems. Pursuant to FMVSS No. 138, the under-inflation warning threshold for the TPMS is set at 25% below the vehicle manufacturer's recommended cold inflation pressure or a minimum activation pressure corresponding to the type of tire, whichever is higher.

The Tire and Rim Association (TRA) establishes and publishes guidelines, by tire size, for recommended tire load and tire pressure. The TRA guidelines, along with similar publications by other specified tire industry organizations, incorporate detailed tables that are used by vehicle manufacturers when deciding on original equipment tires and the recommended tire pressure to place on the vehicle's tire placard. The tire placard is located on the driver's side B-pillar and is intended to inform vehicle owners of the proper tire inflation pressure level.

In addition to the tire placard information, pursuant to a statutory mandate, the agency has recently issued a Final Rule establishing requirements to ensure that vehicle owners are informed when a tire is significantly under-inflated. These systems, known as tire pressure monitoring systems, will detect and warn consumers within 20 minutes after a tire's inflation pressure drops to 25% below the vehicle manufacturer's recommended inflation level. The primary function of a TPMS is to detect under-inflation caused by slow leaks that may otherwise go unnoticed. TPMS are not substitutes for proper tire maintenance. Instead, they provide a supplemental system to assist in informing vehicle owners when maintenance is needed.

The RMA's petition postulates that the pressure in a vehicle's tires at maximum load may fall below the recommended value in the TRA tables before the TPMS warning telltale provides its alert. According to the RMA, the tables specify the minimum pressure that should be recommended for each tire at the vehicle's maximum load. Following this reasoning, if a vehicle manufacturer recommends a placard pressure with less than a 25% margin above what is required to support the vehicle's maximum load, the tires could conceivably fall below the TRA specified value before the TPMS warning telltale illuminates. The RMA asserted that a vehicle driven under such conditions (below TRA specified values) is overloading its tires and that this may lead to tire degradation and, ultimately, to tire failure.

The RMA cited a recent NHTSA study finding that 26% of passenger cars—and 29% of pick-up trucks, sport utility vehicles, and vans—had at least one tire that was under-inflated by at least 25% below placard pressure.[3] The RMA also submitted calculations from a sample of 100 vehicles (model years (MY) 1997 to 2003) indicating that 61% would not have sufficient pressure reserve at maximum load (based on the TRA tables) if the vehicle's tire pressure were to fall to 25% below placard pressure.[4] Finally, the RMA relied on a telephone survey of motorists, which reported that 67% of those surveyed would be less concerned about checking their tire pressure if their vehicles were equipped with a TPMS.

From these data, the RMA concluded that NHTSA's tire standards must be amended to provide a reserve load so that drivers are not lulled into a false sense of security that may lead them to rely exclusively on the TPMS. The RMA argued that the TPMS could encourage drivers to neglect proper tire maintenance, leading in turn to an increased risk of driving on overloaded tires and resulting tire failures.

B. NHTSA's Research To Consider the Petition

The Secretary of Transportation has delegated rulemaking authority under 49 U.S.C. Chapter 301 to prescribe motor vehicle safety standards to NHTSA.[5] However, in order to issue such standards, the agency must make a determination that the standard (or amendment to an existing standard) is practicable, meets the need for motor vehicle safety, and is stated in objective terms.[6] Consistent with this statutory directive, NHTSA's regulations related to the requirements for petitions for rulemaking state that the petition must ''[s]et forth facts which it is claimed

---

[1] The Rubber Manufacturers Association is a national trade organization representing tire and rubber manufacturers in the United States. Its membership includes: (1) Bridgestone/Firestone Americas Holdings, L.L.C, (2) Continental North America, Inc, (3) Cooper Tire and Rubber Company, (4) The Goodyear Tire and Rubber Company, (5) Michelin North America, Inc., (6) Pirelli Tire North America, and (7) Yokohama Tire Corporation.

[2] Docket No. NHTSA–2005–20967–1.

[3] Docket No. NHTSA–2000–8572–74.

[4] We note that the RMA submitted calculations based upon two sets of data that together totaled 100 vehicles. For the purposes of this notice, we have combined these two data sets as a single weighted average. We have done this both for ease of use and because the distinctions between those data sets do not impact our resolution of the RMA's petition.

[5] *See* 49 CFR 1.50.

[6] 49 U.S.C. 30111(a).

establish that an order is necessary.'' [7] If the above criteria have not been met, the agency may not issue a final rule. Accordingly, the RMA's petition must be analyzed in the context of whether sufficient evidence exists as would permit rulemaking to proceed.

In considering the RMA's petition, we reviewed our research relating to whether TPMSs may affect attitudes toward tire maintenance and conducted a comprehensive new study to assess whether there is any correlation between reserve load and real world tire failures.

Because it is possible that some drivers might postpone tire pressure checks until the TPMS warning telltale illuminates, we decided to study actual driver behavior by examining the incidence of inflation pressure checks (as indicated by tire inflation levels) for both TPMS-equipped vehicles and non-equipped peer vehicles.[8] The study examined 2,316 vehicles, 1,259 of which were equipped with TPMSs (213 direct TPMSs and 1,046 indirect TPMSs).[9]

We also studied whether a 25% reserve load requirement is likely to have an impact on real world tire failures. Through Special Orders, we collected detailed data from both tire and vehicle manufacturers to compare the risk of tire failure as a function of tire pressure reserve. The data included details of tire failures reported as claims to tire manufacturers and the distribution in the fleet of pressure reserves as tallied by vehicle manufacturers.

Our purpose was to study how the risk of tire failure varied with pressure reserve for original equipment tires on light vehicles. We used a variety of statistical techniques (including simple correlations and failure-time models) to search for a pattern of failure. We sought and received input on our analytic approach from the Consumer Product Safety Commission and the Department of Transportation's Bureau of Transportation Statistics.

C. Summary of the Agency's Findings

Having reviewed the RMA's data and positions, and having conducted our own analysis into the issues raised in the petition, we have concluded that the data do not substantiate a safety need to establish such a tire pressure reserve requirement under FMVSS No. 110. We have reached this result because:

- The RMA's data regarding the impacts of TPMS installation were based on the results of a self-reported telephone survey and did not involve an objective analysis of actual vehicle operating conditions through direct observation (*i.e.*, by checking tire pressure levels). NHTSA's survey results, which did involve direct measurement of vehicles' tire pressure levels, found that the existence of TPMSs in new vehicles would not cause drivers to neglect routine tire maintenance.
- The RMA's petition gives the mistaken impression that vehicles are regularly loaded to their maximum vehicle weight. In fact, most vehicle trips involve the driver alone, without significant vehicle cargo. NHTSA s data show that, under normal loading conditions with tires inflated 25% below placard pressure, only 11% of vehicles would have overloaded tires.[10]
- Our research demonstrates that even for vehicles found to have tires under-inflated by 25% or more, tire failures are rare events. In a recent study,[11] the total number of tire failure claims reported to the agency was 52 per one million vehicles or a lifetime failure rate of approximately 0.0052 percent for non-recalled tires.[12]
- Agency data suggest that the presence or absence of a tire pressure reserve has little bearing on tire failures, a finding which goes to the heart of the RMA's petition. Specifically, NHTSA examined available data to see whether a high tire pressure reserve resulted in fewer tire failures. We found that the data for certain vehicles with a tire pressure reserve suggested (but did not establish) a lower incidence of tire failures. However, in other cases, the data for vehicles with a tire pressure reserve suggested (but again did not establish) a higher incidence of tire failures. Not only were the results conflicting, but in none of those cases were the results statistically significant.
- RMA's calculations, which the RMA uses to characterize the sufficiency of the tire pressure at maximum vehicle load, are based solely upon deviation from the values reported in the TRA tables. The RMA has not demonstrated the likelihood that operation of a vehicle at tire pressures somewhat below these values is likely to result in tire failure. In light of the above, the available data suggest that the problem articulated in the RMA's petition is essentially a theoretical one and is inconsistent with real world data that show a relatively small number of actual tire failures.
- We expect that a tire pressure reserve requirement for new light vehicles would have major technical and economic ramifications for the automotive industry, with an estimated annual cost of $132 million. Given the absence of a demonstrated safety benefit, the data do not support passing these relatively large costs on to consumers. We do not agree with the assertion that vehicle manufacturers could accommodate a 25% tire pressure reserve load requirement, and incur no substantial cost, by raising the recommended tire inflation pressures or by specifying larger tires with more load carrying capacity for their vehicles.

D. Conclusion

In light of the above, the agency has concluded that: (1) The RMA has not provided sound evidence to suggest that installation of a TPMS will mislead consumers into believing that their tires are properly inflated whenever the TPMS warning telltale is not illuminated; (2) the RMA's data have not demonstrated that vehicles with little or no pressure reserve have a higher rate of failure in the field compared with vehicles having a high tire pressure reserve; and (3) NHTSA's own data demonstrate that a tire pressure reserve requirement, as recommended by the RMA, would not be expected to result in a measurable safety benefit by reducing real world tire failures. Accordingly, we are denying the RMA's petition.

II. Background

In 2000, following numerous motor vehicle fatalities involving failures of defective tires, Congress passed the Transportation Recall Enhancement, Accountability and Documentation (TREAD) Act.[13] Among other things, the TREAD Act directed NHTSA to improve the FMVSSs for tires and to issue a regulation to require installation of TPMSs in new vehicles. In response,

[7] 49 CFR 552.4(c).

[8] Docket No. NHTSA–2005–20967–4.

[9] There are two types of TPMSs currently available, direct TPMSs and indirect TPMSs. Direct TPMSs have a pressure sensor in each wheel that transmits pressure information to a receiver. In contrast, indirect TPMSs do not have tire pressure sensors, but instead rely on the wheel speed sensors, typically a component of an anti-lock braking system, to detect and compare differences in the rotational speed of a vehicle's wheels, which correlate to differences in tire pressure.

[10] Docket No. NHTSA–2005–20967–2, p. 27.

[11] Docket No. NHTSA–2005–20967–2.

[12] Although there is a higher rate for tire failure claims when recalled tires are included, we believe that many failures in those cases would be a product of a defect in the tire itself, rather than a problem associated with tire pressure reserve. Furthermore, it should also be noted that many of reported tire failures may be caused by other factors not related to tire pressure reserve, such as vehicles being operated with grossly under-inflated or overloaded tires, excessively worn high mileage tires, or vehicles being operated in hot climates.

[13] Pub. L. No. 106–414, 114 Stat. 1800 (2000).

NHTSA upgraded several safety standards, including FMVSS No. 110, *Tire Selection and Rims*, and developed FMVSS No. 138, *Tire Pressure Monitoring Systems,* a new standard mandating the installation of automated devices to warn drivers operating motor vehicles with significantly under-inflated tires.

As initially promulgated, FMVSS No. 138 provided for two compliance options. Under either option, the TPMS would illuminate a warning telltale when tire pressure dropped below the higher of either a threshold value (determined as a percentage below placard pressure) or a minimum activation pressure listed in the standard. Option One required a TPMS with a 25% under-inflation warning capability for any combination of tires, up to a total of four tires. Option Two required a TPMS with a 30% under-inflation warning capability for any one tire.[14]

On August 6, 2003, the United States Court of Appeals for the Second Circuit vacated the June 2002 final rule.[15] The Court held that one option, which had a 30%-below-placard threshold, was unlawful because it would permit systems that could not monitor all four of a vehicle's tires. The agency has recently published a final rule adopting a revised FMVSS No. 138 that is consistent with the court's opinion (*i.e.*, requiring a TPMS with a four-tire, 25% under-inflation detection capability).[16] The Court proceedings affected the timing and content of our TPMS rule, but not the analysis of the issues relevant to the RMA's petition.

As part of developing the upgraded FMVSS No. 110 and the new FMVSS No. 138, the agency evaluated tire loading limits and tire pressure reserves for motor vehicles, as well as how often and why vehicles are driven with significantly under-inflated tires. We set forth below a summary of how the agency addressed these topics in order to provide background for understanding the agency's analysis of the RMA petition and the reasons for its denial.

A. Tire Pressure Reserve

FMVSS No. 110 was first issued in 1971. It mandates among other things that all passenger cars sold in the United States be equipped with tires that are capable of carrying the vehicle's maximum loaded vehicle weight at the manufacturer's recommended cold inflation pressure (vehicle placard pressure). Multipurpose passenger vehicles, trucks, buses and trailers must be fitted with tires that are capable of supporting the vehicle's gross axle weight rating (GAWR).[17] In most cases, vehicle manufacturers meet these requirements by consulting standardized tables for tire size, loading, and inflation pressure published by the Tire and Rim Association or other international tire industry organizations.[18]

Vehicle manufacturers may, at their discretion, specify a higher placard pressure for the tires fitted to their products than that provided by the TRA tables to support the vehicle's maximum load. This additional tire pressure is known as ''tire pressure reserve.'' Within bounds, an increase in tire pressure results in an increase in load carrying capacity. The extra load carrying capacity realized, because of the additional tire pressure, is called the ''tire load reserve.''

FMVSS No. 110 also includes a requirement for a tire pressure reserve based on vehicle normal load. ''Vehicle normal load'' is that load on an individual tire that is determined by distributing to each axle its share of the curb weight, accessory weight, and occupant weight and dividing the result by two. The number of occupants used to determine the ''normal load'' is defined in FMVSS No. 110 as two persons for a vehicle with four seating positions, and three persons for a vehicle with five seating positions. The current standard requires that the vehicle normal load on a tire shall not be greater than 88% of the tire's maximum load rating as marked on the tire sidewall.

NHTSA published a final rule upgrading the standards applicable to tires on June 26, 2003 (68 FR 38116).[19] The upgraded version of FMVSS No. 110 specifies that the vehicle normal load on each tire must not exceed 94% of the tire's load rating at the placard pressure for that tire. The agency noted in the preamble of the final rule for the tire performance upgrade that this change would provide safety improvements without necessitating extensive and high cost vehicle redesigns:

> [V]ehicle manufacturers will be required to insure that the tire reserve load corresponds with the tire's load carrying capabilities when the tire is inflated to the vehicle manufacturers recommended cold tire inflation pressure rather than the tire manufacturer's maximum cold inflation pressure shown on the tire sidewall. The 94% figure was chosen to approximate closely the load reserve that results from the current requirement of 88% based on the load rating at the tire's maximum inflation pressure.
>
> By specifying a 94% value based on vehicle normal load, the agency is addressing the vehicle industry's concerns that a significant number of vehicles would otherwise need to be redesigned to accommodate larger tire sizes, while aiming to reflect more accurately actual vehicle loading conditions of vehicles by requiring that each vehicle manufacturer select the appropriate reserve load for that vehicle. The agency has recently conducted a FMVSS No. 110 vehicle normal load evaluation and has concluded that almost all light vehicles could meet a revised criteria for load reserve based on 94% of placard pressure with only a minor increase, *e.g.*, 1 or 2 psi, in this listed inflation pressure to accommodate the new requirement.[20]

This change in calculation of vehicle normal load is intended to more accurately reflect the load based on the vehicle's placard pressure, which may vary from vehicle to vehicle, even when the same tires are used. As noted above, we anticipate that this change in the tire requirements may result in a tire pressure increase of 1–2 psi.

B. Tire Pressure Monitoring Systems

Congress also mandated under the TREAD Act that NHTSA complete ''a rulemaking for a regulation to require a warning system in new motor vehicles to indicate to the operator when a tire

[14] 67 FR 38704 (June 5, 2002).

[15] *See Public Citizen* v. *Mineta,* 340 F.3d 39 (2d Cir. 2003).

[16] *See* 70 FR 18136, (April 8, 2005). Docket No. NHTSA–2005–20586–1.

[17] This requirement was adopted from FMVSS No. 120, *Tire Selection and Rims for Motor Vehicles Other Than Passenger Cars*. Before TREAD Act related upgrades were made (which also consolidated NHTSA's tire standards), passenger cars, and non-passenger cars regardless of their gross vehicle weight rating (GVWR), were covered by FMVSS Nos. 110 and 120 respectively.

[18] Paragraph S4.3.1(c) of FMVSS No. 110 permits the use of standard tire pressure/load tables contained in publications listed in paragraph S4.4.1(b) of FMVSS No. 109 that are current at the date of manufacture of the tire or any later date. Specifically, publications by any of the following international industrial organizations may be used: (1) The Tire and Rim Association, (2) The European Tyre and Rim Technical Organization, (3) Japan Automobile Tire Manufacturers' Association, Inc., (4) Tyre & Rim Association of Australia, (5) Associacao Latino Americana de Pneus e Aros Brazil, or (6) The South African Bureau of Standards.

[19] The June 23, 2003 final rule pertained to FMVSS No. 109, *New Pneumatic Bias Ply and Certain Specialty Tires,* FMVSS No. 110, *Tire Selection and Rims for Motor Vehicles with a GVWR of 4,536 Kilograms (10,000 Pounds) or Less,* FMVSS No. 119, *New Pneumatic Tires for Motor Vehicles with a GVWR of More Than 4,536 Kilograms (10,000 Pounds) and Motorcycles,* FMVSS No. 120, *Tire Selection and Rims for Motor Vehicles with a GVWR of More Than 4,536 Kilograms (10,000 Pounds),* and FMVSS No. 139, *New Pneumatic Radial Tires for Light Vehicles.*

[20] 68 FR 38116, 38141 (June 26, 2003).

is *significantly* under-inflated'' (emphasis added). We note that Congress did not mandate a system that would signal whenever a tire deviated from placard pressure. To do so would likely result in nuisance warnings that eventually could cause drivers to ignore the TPMS.

The agency commenced research studies to support the TPMS rulemaking. In February 2001, NHTSA's National Center for Statistics and Analysis (NCSA) conducted a national survey involving 11,530 vehicles.[21] The tire pressures of the study vehicles were recorded when they came into one of a number of randomly selected gas stations located across the country. NCSA found that 26% of passenger cars—and 29% of pick-up trucks, SUVs and vans—had at least one tire that was underinflated by at least 25% below the placard pressure. This study was designed to assess the level of tire under-inflation for light vehicles on the road (*i.e.*, the target population for the TPMS standard).

The agency established FMVSS No. 138, a new standard requiring light vehicles (*i.e.*, vehicles with a GVWR of 4,536 kilograms (10,000 pounds) or less) to be equipped with tire pressure monitoring systems that warn drivers when the air pressure in their tires has dropped by a specified percentage below the vehicle placard pressure or a minimum activation pressure listed in the standard that corresponds to the type of tire, whichever is higher. Prior to being vacated by court order, FMVSS No. 138 had two performance options for compliance. Option 1 required a warning when any combination of one to four tires becomes under-inflated by 25%. Option 2 required a warning when one tire becomes under-inflated by 30%. As discussed in the June 2002 final rule, NHTSA's research suggested that illumination of the TPMS telltale at 25% or 30% tire under-inflation (or the minimum activation pressures in Table 1 of that rule) would provide a warning to the driver before any tire became ''significantly under-inflated.''

On September 16, 2004, the agency published a new Notice of Proposed Rulemaking (NPRM) for FMVSS No. 138, *Tire Pressure Monitoring Systems,* which would re-establish the standard in a manner consistent with the Second Circuit's opinion (69 FR 55896). That NPRM proposed to mandate a TPMS that must be capable of monitoring the pressure in each tire and warning the vehicle operator when the tire pressure in any combination of one to four tires drops by 25% or more from the vehicle's placard pressure. That NPRM was followed by a final rule that adopted the four-tire, 25% under-inflation detection requirement as part of the standard.

III. The RMA Petition

In July 2002, the Rubber Manufacturers Association petitioned NHTSA to initiate rulemaking to amend FMVSS No. 110, by establishing a new tire pressure reserve requirement for vehicles that have a GVWR of 4,536 kilograms (10,000 pounds) or less. In its petition, the RMA requested that NHTSA require vehicle manufacturers to select tires for their vehicles that are capable of carrying the vehicle's maximum load[22] even if under-inflated by up to 30% from the vehicle manufacturer's placard pressure. This percentage was chosen by the RMA because it corresponded to the minimum drop in tire inflation pressure before the TPMS warning is activated, under the less stringent of the two compliance options contained in the since-vacated June 2002 rule.

In its petition, the RMA stated that consumers who operate their vehicles in a fully-loaded condition, which do not have additional tire pressure (a tire pressure reserve) beyond what is required to support that load, may overload their tires if the inflation pressure decreases below the placard value. The RMA argued that extended operation of the vehicle in this worst-case scenario could result in tire failures.

According to the RMA, for vehicles that have a tire pressure reserve, any reduction in tire inflation pressure that does not exceed that reserve amount would be inconsequential, as the tires would retain sufficient load carrying capacity (based on the TRA tables) for the vehicle's maximum load. However, the RMA argued that in practice, vehicle manufacturers sometimes set a pressure reserve only slightly above the load-pressure values provided in the TRA tables, which means that a tire's pressure may drop below that value prior to reaching the inflation pressure level that would trigger the TPMS low pressure warning lamp.

The RMA further asserted that existing reserve requirements under NHTSA's current tire standards are inadequate to address this problem. Instead, by requiring a tire pressure reserve that is at least the same amount as the decrease in tire pressure that activates the TPMS telltale, the petitioner argued that vehicle operators would always receive warnings whenever tire pressures fall below the pressure required to support the vehicle's maximum load and that, as a result, the overall incidence of tire failures would be reduced.

In its petition, the RMA asserted that unless NHTSA mandates a specified reserve load, its FMVSS would not adequately protect motor vehicle operators from the risks of driving on significantly under-inflated tires. The petitioner claimed that its proposed requirement would address what it considers a ''serious deficiency'' in the TPMS rule, citing survey data from NCSA reflecting the percentages of sampled vehicles with underinflated tires. The RMA petition added: ''There is a substantial risk that the new TPMS standards will, in practice, confuse or mislead consumers into believing that their tires are properly inflated whenever the TPMS warning is not illuminated.''

To support its petition, the RMA provided calculated pressure reserve data, based on maximum vehicle loads, for a sample of 100 vehicles from model years 1997 to 2003. The RMA data suggest that 61% of the sampled vehicles would not have sufficient reserve pressure at maximum load if equipped with a TPMS that activates when the vehicle's tire pressure falls by 25% from the placard pressure, and that 76% of the sampled vehicles would have insufficient reserve pressure if their tires were underinflated by 30% from the placard pressure. The RMA stated that most of the sampled vehicles would overload their tires if operated fully loaded and with them underinflated by 30% from the vehicle placard.

The RMA petition also stated that most vehicles on the road today (61% or 76% depending on the TPMS warning threshold) could experience tire failures if drivers rely solely on TPMS warnings before maintaining their tire pressures. Specifically, the RMA argued that without an additional pressure reserve, drivers may operate their vehicles with tires underinflated from the recommended placard pressure by values ranging from zero to the warning threshold level before they receive a low tire pressure warning.

IV. Agency Analysis

A. Reduction in Proper Tire Maintenance

The RMA petitioned NHTSA to require that vehicle manufacturers

[21] Docket No. NHTSA–2000–8572–74.

[22] For purposes here and in the rest of this document, a vehicle's ''full load'' and ''maximum load'' are used interchangeably and mean a vehicle's maximum loaded vehicle weight in the case of passenger cars and the gross axle weight ratings for MPVs, trucks, buses, or trailers.

select tires for their vehicles and provide a pressure reserve that would ensure the tires are capable of carrying the vehicle's maximum load even if underinflated by up to 30% from the vehicle placard pressure. The petitioner argued that the agency's TPMS rule (for systems capable of the now-vacated 30% under-inflation detection level or the current 25% under-inflation detection level) does not adequately protect motor vehicle operators from driving on significantly under-inflated tires because there is a substantial risk that the TPMS standard will, in practice, confuse or mislead consumers into believing that their tires are properly inflated whenever the TPMS warning telltale is not illuminated.

On August 19, 2003, the RMA provided comments to the NHTSA Docket on TPMS.[23] The RMA indicated that its comments were, among other things, intended to supplement the materials submitted with its petition. Included in this submission were the results of a national consumer telephone survey of motorists' tire maintenance attitudes (700 participants) and did not involve any tire pressure measurements. The RMA survey found that 67% of motorists would be less concerned with checking tire pressure if their vehicles were equipped with a TPMS.

Agency Response

The agency does not anticipate that consumers will come to believe that tire maintenance is unnecessary unless and until the TPMS warning telltale is illuminated. The agency believes that sufficient measures are in place to ensure that TPMSs operate as a supplement to regular tire maintenance, not as a substitute for it. Tire pressure monitoring systems are designed to detect slow and progressive reductions in tire pressure that may occur while driving (the standard requires the system to alert the driver within 20 minutes after the tire pressure has fallen below the requisite level) or when there is a significant decrease in tire pressure between regular tire pressure checks. The agency continues to mandate that tire pressure information be made clear to the vehicle owner on the driver's side B-pillar and in the owner's manual and that information on the importance of regular tire maintenance also be provided.

For example, NHTSA's final rule for TPMS (S4.5) requires vehicle manufacturers to include specified owner's manual language that describes the importance of routine tire maintenance and the role of the TPMS. Specifically, the vehicle owner's manual must provide, in relevant part: ''Each tire, including the spare (if provided), should be checked monthly when cold and inflated to the inflation pressure recommended by the vehicle manufacturer on the vehicle placard or tire information label. * * * Please note that the TPMS is not a substitute for proper tire maintenance, and it is the driver's responsibility to maintain correct tire pressure, even if under-inflation has not reached the level to trigger illumination of the TPMS low tire pressure telltale.''

NHTSA has also stressed the importance of proper tire maintenance as part of its consumer information program. For example, the agency has published and distributed a brochure on tire maintenance and repair titled ''Tire Safety: Everything Rides On It,'' with key highlights posted on the NHTSA Web site.[24] Additional tire maintenance information is posted on NHTSA's Safercar.gov Web site.[25]

We are concerned with placing too heavy a reliance on the RMA's telephone survey because it did not involve actual observation of vehicle conditions (*i.e.*, by checking tire pressure levels).[26] RMA's survey only provided consumers' subjective opinions regarding tire maintenance. As a result, it is not possible to know whether the survey participants actually followed through with their claimed behavior. Nor did the RMA survey identify owners of TPMS-equipped vehicles, a group whose tire maintenance behavior may be most revealing when trying to assess the potential impact of TPMS on continuing maintenance.

Other studies have more directly assessed the actual impact of TPMSs on tire inflation pressure levels, and they suggest that TPMSs may have a positive impact on tire pressure maintenance. The Alliance of Automobile Manufacturers (Alliance) submitted the results of a TPMS survey conducted by General Motors (GM) at its dealerships in Michigan.[27] In that study, the tire pressures were measured on 267 vehicles—211 vehicles with no TPMS, 32 vehicles with an indirect TPMS, and 24 vehicles with a direct TPMS.

The results of the General Motors real-world study indicated that the measured inflation pressure distribution for the vehicles with a direct TPMS was centered at 1% above placard pressure. The measured inflation pressure distribution for the vehicles with an indirect TPMS was centered at placard pressure, and the measured inflation pressure distribution for the vehicles with no TPMS was centered at 2% below placard pressure. The results of the study further indicated that TPMS-equipped vehicle distributions are centered tightly around the placard pressure, and not close to the TPMS warning activation pressure level.

In addition, NCSA recently completed a study on TPMSs that bears on the issue of tire inflation pressure maintenance. (A copy of the NCSA study can be found at Docket No. NHTSA–2005–20967–4.) In that study, data were collected on 2,316 vehicles ranging from passenger cars to light trucks. There were 213 vehicles equipped with direct TPMSs and 1,046 vehicles equipped with indirect TPMSs. The remaining 1057 vehicles were selected for use as baseline peer vehicles and were not equipped with any TPMS.

The data were analyzed by comparing the recommended tire inflation pressure for each vehicle to actual measured tire pressure. The average level of under-inflation was found to be 11% for vehicles equipped with indirect TPMSs and 5% for those equipped with direct TPMSs. The peer comparison vehicles[28] without TPMSs were found to have levels of under-inflation of 14% and 9%, respectively.

The 2,316 vehicles in the NCSA TPMS study were part of a complex random sample where vehicles had an unequal probability of selection from the population. Furthermore, data collection was terminated at an early stage due to the Court of Appeals' decision to vacate the TPMS standard, and as a result, the study did not reach the planned target sample size of 7,000 inspected vehicles. These factors could affect the results presented above because the sample may not be representative of the vehicle population. To address this concern, NCSA computed sample weights to adjust for the unequal probability of selection and to examine whether the results using the

[23] Docket No. NHTSA–2000–8572–271.

[24] *See http://www.nhtsa.dot.gov*

[25] *See http://www.safercars.gov/Tires/.*

[26] The RMA's petition also cited data from a July 2001 Bureau of Transportation Statistics (BTS) omnibus survey which found that 65% of the respondents would be less concerned with routinely maintaining their tire pressures if their vehicles were equipped with a TPMS (*see* 67 FR 38704, 38718 (June 5, 2002)). However, like the RMA's telephone survey, this BTS survey did not include an observational component to determine whether consumers followed through on those opinions by decreasing their tire maintenance. Accordingly, we have the same concerns with the BTS survey as we do with the RMA's survey data.

[27] Docket No. NHTSA–2000–8572–246.

[28] PEER vehicles are control group vehicles and include vehicles of the same model years, similar body styles and price ranges to the TPMS vehicles, but which do not have TPMS.

raw (unweighted) data were affected by the sample selection. The analysis of weighted data found the average level of under-inflation to be 7% for vehicles equipped with indirect TPMSs and 6% for those equipped with direct TPMSs. The peer comparison vehicles without TPMSs were found to have levels of under-inflation of 9% and 10%, respectively. The differences between vehicles with TPMS and the peer vehicles are very similar to the results presented above, and thus the conclusions do not appear to be affected by the sample selection. The weighted differences, however, did not achieve statistical significance at conventional levels.

In spite of the lack of statistical significance, we believe that the observed differences between vehicles with and without TPMS are real for at least two reasons. First, the finding is robust to both an analysis of the raw and weighted data. Second, the lack of statistical significance in the weighted analysis can be explained in part by the early termination of the study, which resulted in a smaller sample size and larger effects of the sample design on the estimated standard errors than would have occurred with the full study.

The studies involving actual measurements of tire pressures suggest that drivers of TPMS-equipped vehicles engage in proper and regular tire maintenance and do not ordinarily wait for the TPMS warning before adding inflation pressure to their tires. Indeed, TPMS-equipped vehicles may, on average, have better maintained tire pressure. If these findings are correct, an expansion of TPMS fleet penetration could potentially bring similar inflation pressure improvements to all light vehicles, thereby positively impacting the target population identified in the earlier NCSA study.

The RMA's assertion that TPMS would confuse or mislead consumers into believing that their tires are properly inflated whenever the TPMS warning is not illuminated is largely based on its telephone survey. Because we have concerns about that survey and because other studies suggest a different result, we do not believe the data support a conclusion that the TPMS rule is likely to result in a potentially dangerous decline in regular tire maintenance.

B. Tire Pressure Reserve To Offset Drops in Tire Pressure

The RMA also argued that vehicle manufacturers should be required to provide a tire pressure reserve for their vehicles sufficient to offset drops in tire pressure that may occur before consumers are warned by the installed TPMS. The RMA argues that in order to prevent tire failures and protect consumers, vehicle manufacturers should be required to specify tires for their vehicles that can carry the vehicle's maximum load while operating at pressures that range from the placard pressure down to the TPMS warning threshold pressure.

The RMA provided calculations of pressure reserve, based on maximum vehicle loads, for 100 sample vehicles from model years 1997 to 2003. The vehicles selected were from the following categories: sports car (11%), compact (14%), mid-size (20%), full-size (8%), luxury (19%), sport utility vehicle (SUV) (8%), van (15%), and pick-up truck (5 percent). In summary, 72% of the RMA sample vehicles were passenger cars and 28% were light trucks.

The RMA's tire pressure reserve calculations showed that 61% of the vehicles would have tire pressures below the pressures specified in the TRA tables for such loadings if (1) the vehicles in the study were equipped with a TPMS having a 25% below placard activation threshold, and if (2) the vehicles were operated with tire pressures just under the activation threshold, and if (3) the vehicles were fully loaded to their maximum weight rating. Alternatively, with the same assumptions as stated above, the RMA's calculations showed that 76% of the sampled vehicles could have pressure below the values listed in the TRA tables if their tires were under-inflated by 30% from the placard pressure. As a result, the RMA concluded that the placard pressure for many vehicles on the road today would be insufficient to carry the maximum load of the vehicle without over-deflecting the tires and causing tire damage, if the tires are operated at a level of under-inflation close to the TPMS activation threshold.

Agency Response

The agency is not convinced that the calculations presented by the RMA reflect real-world conditions. The RMA's concern is premised on an assumption that operating below the values listed in the TRA tables is unsafe. We have been unable, however, to find any real world data to confirm that assumption. The RMA did not provide factual evidence showing that a pressure reserve requirement in itself would significantly reduce tire failures. And NHTSA's research, the details of which follow below, did not demonstrate a link between tire pressure reserve and tire failures. In addition, we are not aware of data, and the RMA has not provided any, showing that the RMA's sampled vehicles experience increased tire failure rates.

The RMA data were developed assuming each of the sample vehicles is at its maximum loading condition. However, the data also indicate that many of these vehicles, when operating under normal load conditions (the most common situation), would be within the load-pressure operating range specified by the TRA tables, even when they are under-inflated by 25% or 30% from placard pressure. In fact, NHTSA's data, which are based on a sample of 100 million vehicles, show that only 11% of the vehicles would have overloaded tires at normal loading condition when their tires are under-inflated 25% below placard pressure.[29]

As defined earlier, the ''normal load'' on a vehicle is the typical load experienced during normal operation of the vehicle, which includes the vehicle curb weight, accessory weight, and the combined weight of the appropriate number of occupants. Moreover, there are no data showing that any vehicles have experienced higher tire failure rates due to the absence of a pressure reserve.

The RMA's conclusion rests on industry-based TRA tables. However, the RMA has not provided any evidence to correlate tire inflation pressures at 25% below the values published in the TRA tables with real and significant safety consequences. Despite the fact that over a quarter of light vehicles on the road today having at least one tire under-inflated by at least 25%, as shown in the previously-discussed NCSA study, the data do not show large numbers of tire failures, as one might expect if in fact tire overload as defined by the TRA tables were the underlying cause of tire failure. It appears likely that the tire industry tables are conservative and may contain some built-in safety margin.

In addition, an examination of the engineering formulae that serve as the basis for the TRA tables reveals that they are largely empirical and depend only on tire dimensions, as opposed to any material, design, construction, or loading factors. It is noteworthy that neither the RMA nor the TRA has provided NHTSA with technical or engineering data that would demonstrate a relationship between tire failures and load carrying capacity as defined in the TRA tables for pressures within the 25% threshold of a TPMS.

[29] Docket No. NHTSA–2005–20967–2, p. 27.

NHTSA Data

While RMA did not present data sufficient, in our view, to support granting its petition, the agency nonetheless decided to conduct independent research to determine whether a high tire reserve load correlates with a reduction in tire failures.

The question of whether a pressure reserve requirement can reduce tire failures was first explored in a study conducted for NHTSA in the early 1980s. [30] It examined whether there was a correlation between tire reserve load (which is equivalent to tire pressure reserve) and tire failure rates. The study analyzed a total of 1,760 tire failure records from MY 1974–1978 vehicles manufactured by General Motors, American Motors, Volkswagen, Datsun (currently known as Nissan), Toyota, Honda, Chrysler, and Ford. The tire reserve load values for groups of similar models produced in that period were collected from the vehicle manufacturers.

After assigning each of the tire failure records to a particular vehicle group with a tire reserve load value, normalizing the data by the sales volumes for all the vehicles, and looking for a relationship between the frequency of tire failures and vehicles with different levels of tire reserve load, the study results were inconclusive. No correlation was found between tire failure rates and tire pressure reserve for vehicles manufactured by Ford, American Motors, and the import manufacturers, but there were increased tire failure rates as pressure reserve increased for Chrysler vehicles, and decreased tire failure rates as pressure reserve increased for General Motors vehicles.

Based upon the results of the February 1981 study, NHTSA prepared an analysis titled, ''The Relationship Between Tire Reserve Load Percentages and Tire Failure Rates,''[31] which concluded that there existed no consistent or reliable relationship between tire reserve load and tire failure rates. Accordingly, NHTSA decided at that time not to include a tire pressure reserve requirement in FMVSS No. 110.

Nevertheless, because vehicles and tires have changed over the past 25 years, NHTSA decided, in response to the RMA petition, to conduct an expanded and more comprehensive study to examine whether there now exists a relationship between tire pressure reserve and tire failure for light vehicles with a GVWR of 4,536 kilograms (10,000 pounds) or less.

This more detailed study was designed to examine tire failure rates as a function of tire pressure reserve for the entire population of light vehicles sold in the United States from model years 1996 through 2002.[32] In January 2003, NHTSA issued Special Orders to vehicle and tire manufacturers and collected data on the total number of tire failure claims [33] reported by consumers to those entities. The agency also collected data on vehicle production volumes and the pressure reserve values of every unique vehicle-tire group [34] for those model years. A total of 24 vehicle manufacturers and 9 tire manufacturers reported 18,533 claims that occurred on 14,039 unique vehicle-tire groups, to the agency. The data represent just over 109 million vehicles that were produced during the model years examined under the study.

NHTSA examined separately P-metric tires (that are primarily intended for use on passenger cars but are often used on pick-up trucks and SUVs) and light truck (LT) tires. The data were also separated by one of four vehicle types (passenger car, SUV, van, and pick-up truck) and by axle (front vs. rear). The tire failure claim rate was lowest for passenger cars and vans equipped with P-metric tires. It was highest for pick-up trucks and SUVs equipped with LT tires. Claims were generally more common for tires on the rear axles of vehicles and for LT tires.

Next, NHTSA calculated tire failure rates as a function of tire pressure reserve for 14 possible combinations of tire type, axle, and vehicle type. These were: P-metric tires on the front and rear axle of passenger cars (2 combinations); and P-metric and LT tires on the front and rear axles of pick-up trucks, SUVs, and vans (2×2×3 or 12 additional combinations). Of these, there was sufficient information on 10 combinations of vehicle type, axle, and tire type for analysis. These were P-metric tires on both axles of all four vehicle types, and LT tires on pick-up trucks.

From there, the agency calculated tire failure rates for each of the 10 combinations and found only one statistically significant result suggesting an association between tire failure and tire pressure reserve (P-metric tires on the rear axle of passenger cars). However, one result is not sufficient to establish this relationship with any reasonable certainty. In a series of 10 tests, there is a high statistical probability of finding a result that appears to be significant, but is actually a matter of chance. In other words, even if there was no correlation between tire failure claims and tire pressure reserve, the agency would expect to find at least one result showing correlation (*i.e.*, a false positive) about 40 percent of the time. Based on these results, the agency has concluded that comparisons of tire failure as a function of pressure reserve yield inconclusive results. These results are consistent with those of the 1981 study discussed above.[35]

In order to confirm the results of the tire pressure reserve study, the agency also used a failure-time model with the Special Order data, which once again indicated conflicting results in terms of the impact of tire reserve load on the

[30] The study, published in February 1981, was conducted by Chi Associates, Inc. This study can be found in NHTSA Docket No. 81–09–NPRM–N01–001.

[31] Docket No. 81–09–NPRM–N01–002.

[32] The final report discussing the Special Order data and NHTSA's analysis can be found in the NHTSA docket, number NHTSA–2005–20967–2. The report is titled: ''Data Submitted in Response to the Special Order on Tire Reserve Pressure.''

[33] The Special Orders defined ''tire failure'' as meaning the following: (1) Belt-to-belt separation, (2) belt edge separation, (3) sudden loss of inflation pressure, (4) separation of tread, sidewall, ply cord, inner liner, or bead, (5) chunking, (6) broken cords, (7) cracking, and (8) open splices. Tire failure was defined further as the manufacturer's ''opinion about the alleged failure mode and cause (from the list of 8 failure modes/causes listed under the definition of ''tire failure,'' specify all failure modes and causes that apply).''

The Special Orders defined ''claim'' as meaning ''a written request or written demand for relief, including money or other compensation, assumption of expenditures, or equitable relief, related to a motor vehicle crash, accident, the failure of a component or system of a vehicle or an item of motor vehicle equipment, or a fire originating in or from a motor vehicle or a substance that leaked from a motor vehicle. Claim includes, but is not limited to, a demand in the absence of a lawsuit, a complaint initiating a lawsuit, an assertion or notice of litigation, a settlement, covenant not to sue or release of liability in the absence of a written demand, and a subrogation request. A claim exists regardless of any denial or refusal to pay it, and regardless of whether it has been settled or resolved in the manufacturer's favor. The existence of a claim may not be conditioned on the receipt of anything beyond the document(s) stating a claim. Claim does not include demands related to asbestos exposure, to emissions of volatile organic compounds from vehicle interiors, or to end-of-life disposal of vehicles, parts or components of vehicles, equipment, or parts or components of equipment.''

[34] A ''vehicle-tire group'' means a category of vehicle possessing identical specifications for the following identifiers: vehicle make, vehicle model, model year, number of doors, number of drive wheels, gross-axle weight rating, make/model and size(s) of original equipment tires on each axle, and manufacturers recommended inflation pressure for tires on each axle.

[35] We note that NHTSA has found this low incidence of actual tire failures, as revealed in the claims data in our study, to be repeated in laboratory testing as well. As noted in the June 5, 2002 final rule for TPMS, the agency tested a variety of Standard Load P-metric tires at 20 psi with 100 percent load at 75 mph for 90 minutes on a dynamometer. None of the tires failed. (*See* 67 FR 38704, 38726.)

probability of tire failure, none of which were statistically significant. Consequently, this model also did not establish a safety benefit associated with a tire pressure reserve.

However, because this latter model produced a value that approached significance (p value = 0.06), we decided to use these results to develop a hypothetical estimate of the costs and benefits of a tire pressure reserve, for the moment assuming that an association had been demonstrated. The details of this analysis have been placed in the docket,[36] but the following summarizes the key points.

Using this model, we produced an estimate of 2.15% fewer tire failures if all new vehicles were required to be fitted with tires that had, at a minimum, 8 psi of pressure reserve. If we assume that these changes would produce a proportionate reduction in tire-related deaths and injuries, then we can apply 2.15% to data from the Fatality Analysis Reporting System (FARS), the General Estimates System (GES), and the National Automotive Sampling Survey (NASS) to produce an estimate of safety benefits. Extrapolating from a previous NHTSA analysis,[37] the agency estimates that the potential benefits would be prevention of 731 crashes (with roughly $2 million in property damage and travel delay savings), 4 fatalities, and 96 injuries in all cases involving blowouts or flat tires. However, this target population of all blowouts or flat tires is larger than could be impacted by tire reserve load, as many flat tires are caused by running over a hazardous object in the road and are not caused by factors influenced by tire reserve load. Thus, the unproven benefits listed above likely overstate the true potential benefits, although the magnitude of this overstatement is unclear.

In terms of costs, the RMA proposed that vehicle manufacturers could accommodate a tire pressure reserve requirement by simply raising the recommended tire inflation pressures or by specifying larger tires with more load carrying capacity for their vehicles. We do not believe this to be the case. We believe that a tire pressure reserve consistent with RMA's recommendation would have major technical and cost ramifications for the automotive industry and consumers, which could amount to approximately $132 million per year. For many vehicles, an increase in tire pressure of up to 8 psi may be necessary to meet the RMA's recommended tire pressure reserve, but increases of this magnitude could cause ride comfort to decrease considerably. In such cases, an increase in tire size would be needed, thereby triggering production changes and associated cost increases. Again, for a more complete discussion, please see the analysis of costs and benefits placed in the docket.[38] Given that the agency's careful review of the data has found no demonstrable safety benefit from a tire pressure reserve requirement as would justify rulemaking, it is unlikely that imposition of these costs on consumers could withstand scrutiny under the rulemaking process.

V. Conclusions

The agency is not persuaded by the RMA's arguments that a tire pressure reserve requirement for light vehicles equipped with TPMSs is needed, for three reasons: (1) NHTSA does not agree with the RMA's claim that the TPMS standard will mislead consumers into believing that their tires are properly inflated whenever the TPMS warning telltale is not illuminated, because the petitioner has not provided compelling evidence that shows this to be the case; (2) the RMA did not provide data to show that tires on vehicles with little or no pressure reserve have a higher rate of failure in the field compared with vehicles having a high tire pressure reserve; and (3) the agency's independent studies have not shown a reliable or conclusive relationship between tire pressure reserve and tire failure claims in the field.

For the reasons stated above, the agency is denying the petition. In accordance with 49 CFR Part 552, this concludes the agency's review of the petition.

Authority: 49 U.S.C. 322, 30111, 30115, 30117, and 30162; delegation of authority at 49 CFR 1.50 and 501.8.

Issued on: May 13, 2005.

Stephen R. Kratzke,

Associate Administrator for Rulemaking.

[FR Doc. 05–9989 Filed 5–18–05; 8:45 am]

BILLING CODE 4910–59–P

[36] Docket No. NHTSA–2005–20967–3.

[37] "Final Regulatory Evaluation, FMVSS No. 139, New Pneumatic Tires for Light Vehicles," NHTSA, June 2003, p. S–2 (Docket No. NHTSA–2003–15400–2).

[38] Docket No. NHTSA–2005–20967–3.

DEPARTMENT OF THE INTERIOR

Fish and Wildlife Service

50 CFR Part 17

RIN 1018–AT31

Endangered and Threatened Wildlife and Plants; 12-Month Petition Finding and Proposed Rule To Delist the Mexican Bobcat (*Lynx Rufus Escuinapae*)

AGENCY: Fish and Wildlife Service, Interior.

ACTION: Proposed rule; notice of finding.

SUMMARY: We, the U.S. Fish and Wildlife Service (Service), announce the 12-month finding that a petition to delist the Mexican bobcat (*Lynx rufus escuinapae*) under the Endangered Species Act of 1973, as amended (Act, or ESA), is warranted. The best available information indicates that the Mexican bobcat may not constitute a separate subspecies and does not constitute a distinct population segment (DPS). Despite habitat modification by humans, the bobcat remains abundant throughout Mexico. Accordingly, we herein propose to delist the Mexican bobcat under the Act. The Service seeks data and comments from the public on this proposed rule.

DATES: Comments and information may be submitted until August 17, 2005. Public hearing requests must be received by July 5, 2005.

ADDRESSES: Submit comments, information, and questions to the Chief, Division of Scientific Authority, U.S. Fish and Wildlife Service, 4401 N. Fairfax Drive, Room 750, Arlington, VA 22203, USA; or by fax (703–358–2276) or by e-mail (*scientificauthority@fws.gov*). Comments and supporting information will be available for public inspection, by appointment, from 8 a.m. to 4 p.m. at the above address.

To request copies of the regulations regarding listed wildlife or inquire about prohibitions or permits, write to: Division of Management Authority, 4401 North Fairfax Drive, Room 700, Arlington, VA 22203, USA. Alternatively, you may contact us by telephone (703–358–2104; toll free, 1–800–358–2104), fax (703–358–227), or e-mail (*managementauthority@fws.gov*).

FOR FURTHER INFORMATION CONTACT: Dr. Javier Alvarez at the above address; or by telephone (703–358–1708), fax (703–358–2276), or e-mail (*scientificauthority@fws.gov*).

SUPPLEMENTARY INFORMATION:

Background

Section 4(b)(3)(A) of the Endangered Species Act of 1973 (Act), as amended (16 U.S.C. 1531 *et seq.*), requires the Service to make a finding on whether a petition to list, delist, or reclassify a species has presented substantial information indicating that the requested action may be warranted. This finding is to be based on all information available to us at the time the finding is made. To the maximum extent practicable, the finding shall be made within 90 days following receipt of the petition (this finding is referred to as the ''90-day finding'') and published promptly in the **Federal Register**. If the 90-day finding is positive (*i.e.*, the petition has presented substantial information indicating that the requested action may be warranted), Section 4(b)(3)(A) of the Act requires the Service to commence a status review of the species if one has not already been initiated under the Service's internal candidate-assessment process. In addition, Section 4(b)(3)(B) of the Act also requires the Service to make a finding within 12 months following receipt of the petition on whether the requested action is warranted, not warranted, or warranted but precluded by higher-priority listing actions (this finding is referred to as the ''12-month finding''). The 12-month finding is also to be published promptly in the **Federal Register**.

Previous Federal Action

We listed the Mexican bobcat as an endangered species on June 14, 1976 (41 FR 24064). This subspecies was listed under the Act due to its inclusion in Appendix I of the Convention on International Trade in Endangered Species of Wild Fauna and Flora (CITES). By July 1, 1975, the Convention was ratified by enough nations to enter into force, and at that time the countries participating in CITES agreed that the Mexican bobcat met the criteria for inclusion in Appendix I, which includes species threatened with extinction that are or may be affected by international trade. However, it is not clear why the Mexican bobcat was originally included in Appendix I. In 1992, during the 10-year review of species included in the CITES Appendices, the United States, with support from Mexico and other countries, proposed to transfer the Mexican bobcat to Appendix II, based on the bobcat's widespread and stable status in Mexico and the questionable taxonomy of this subspecies. The U.S. proposal was accepted and the transfer went into effect on November 6, 1992.

On July 8, 1996, we received a petition dated June 30, 1996, from the National Trappers Association, Inc., Bloomington, Illinois. The petition and cover letter clearly identified itself as such and contained the name, address, and signature of the petitioning organization's representative. Information relating to the taxonomy, the present population status and trends, and threats were included in the petition. The petition requested that we delist the Mexican bobcat under the Act, and noted that downlisting to threatened status would not be an appropriate alternative. In a letter dated November 4, 1996, we acknowledged receipt of the petition (Service, *in litt.*, 1996). We stated that we would address the petition as soon as possible. Due to staffing and budget constraints, we were unable to process the petition until 2003.

On June 11, 2003, we made a positive 90-day finding on the National Trappers Association petition (*i.e.*, the Service found that the petition presented substantial information indicating that the requested action may be warranted). That finding was published in the **Federal Register** on July 2, 2003 (68 FR 39590), thereby initiating a public comment period and status review for the species. In that notice, we indicated that we would determine whether delisting of the Mexican bobcat was warranted based on its status and taxonomy. If the subspecies designation was found not to be taxonomically valid, we would then evaluate if the listed population in Mexico constituted a Distinct Vertebrate Population Segment (DPS), and if so, whether or not we should retain the listing of this population. If this population did not meet the DPS criteria, we would then evaluate whether or not the listed population is endangered or threatened in a significant portion of the species' (*i.e., Lynx rufus*) range. The public comment period remained open until September 30, 2003.

We received four comments during the public comment period, including two from the government of the range country (Mexico), one from a non-governmental conservation organization (Center for Biological Diversity [CBD]), and one from an individual (Mr. Lawrence G. Kline, who submitted the original petition on behalf of the National Trappers Association). The Government of Mexico (Comisión Nacional para el Conocimiento y Uso de la Biodiversidad/National Commission for the Understanding and Use of Biodiversity [CONABIO], and Secretaría de Medio Ambiente y Recursos Naturales/Ministry of Environment and Natural Resources [SEMARNAT]) did not object to the delisting. Mr. Kline supported the delisting, commenting that there is no evidence of taxonomic differences between bobcat populations in the United States and Mexico, and that the bobcat population in Mexico does not constitute a discrete population separate from the U.S. bobcat population. CBD opposed the delisting because of a lack of population information. CBD further argued that continued listing was necessary to help prioritize research, and that development along the U.S.-Mexico border was likely to increase, thus reducing genetic flow between bobcat populations in Mexico and the United States. However, no substantial new information was provided by any of the four commenters. The comments submitted by Mr. Kline and CBD are addressed in the sections below.

In our 90-day finding, we stated that we had used all relevant literature and information available at that time (June 2003) on current status of and threats to the Mexican bobcat. Since then, a limited amount of relevant new information has become available as a result of the status review and separate consultations with the Mexican Government on a U.S. proposal to remove the bobcat from Appendix II of CITES. That information has been incorporated, as appropriate, in this 12-month finding.

Taxonomy and Biology of the Species

The Mexican bobcat belongs to the mammalian family Felidae and has been reported to be a subspecies of *Lynx rufus*. The number of taxa described within *Lynx rufus* ranges from 11 to 14. According to Larivière and Walton (1997), six subspecies of bobcat occur in Mexico, including *L. r. escuinapae*. The distribution of *L. r. escuinapae* extends from the northern states of Mexico, some distance south of the Rio Grande and the U.S.-Mexico border, to the Isthmus of Oaxaca in central Mexico (Larivière and Walton 1997). Allen (1903) first described the Mexican bobcat as a subspecies from two immature male specimens found in Escuinapa, Mexico, on the basis of color and cranial differences. However, the validity of this subspecies is questionable. Samson (1979) conducted a multivariate statistical analysis of a variety of skull measurements and found cranial characteristics of *L. r. escuinapae* to be similar to those of *L. r. californicus* and *L. r. texensis*. Also, the range of *L. r. escuinapae* overlaps with the ranges of *L. r. baileyi* and *L. r. texensis*, two subspecies found in the southern United States whose range

extends into northern Mexico. However, McCord and Cardoza (1982) noted that statistical analysis of skull measurements only has meaning in large samples and is thus ineffective in the subspecific assignment of individual specimens. They also noted that the 11–14 subspecies of bobcats described to date comprise few realistically distinguishable taxa that have any real biological or conservation significance. Most recently, in a meeting of Mexican mammal experts, no consensus was reached about the taxonomic validity of *L. r. escuinapae* (Hesiquio Benítez-Díaz, CONABIO, *in litt.* 2004).

The bobcat is the most widely distributed felid in North America (Anderson and Lovallo 2003). The majority of bobcats are found in the United States, where they range through a wide variety of habitats, including boreal coniferous and mixed forests in the north, bottomland hardwood forest and coastal swamp in the southeast, and desert and scrubland in the southwest. Even within a local area, individual bobcats usually use a variety of habitats (Wilson and Ruff 1999). Only large, intensively cultivated areas appear to be unsuitable habitat, presumably because of reductions in the availability of prey. Southern Canada represents the northern limit of bobcat range, with deep snow a significant limiting factor (Larivière and Walton 1997; Anderson and Lovallo 2003). In Mexico, bobcats are found in a wide range of habitats, including dry scrub, coniferous forests, mixed pine (*Pinus* spp.) and oak (*Quercus* spp.) forests, and tropical deciduous forests (Hall and Kelson 1959; Gonzalez and Leal 1984 and Woloszyn and Woloszyn 1982 cited by Nowell and Jackson 1996; López-González *et al.* 1998; Hesiquio Benítez-Díaz, CONABIO, *in litt.* 2004).

Aside from being habitat generalists, bobcats are opportunistic in their choice of prey (Wilson and Ruff 1999; Anderson and Lovallo 2003). Although rabbits predominate in their diet, bobcats feed on a wide range of taxa as well as carrion, with some regional variations (Anderson and Lovallo 2003).

Over the last century, the bobcat has expanded its range northward as the mature, continuous coniferous forests have been opened by lumbering, fire, and agriculture (Rollings 1945; Banfield 1974). Similarly, in Mexico, fragmentation and clearing of tropical forests appear to be contributing to the range expansion of bobcats (López-González *et al.* 1998), presumably because of increases in the diversity and abundance of prey species associated with forest edges and the opening of the forest canopy.

Bobcats are polygamous (Larivière and Walton 1997). Most female bobcats reach reproductive maturity at 2 years of age and adults remain reproductively active until death (around 15 years of age) (Larivière and Walton 1997; Wilson and Ruff 1999). They generally have one litter per year, ranging in size from one to six, with an average of three young per litter. However, females are capable of producing a second litter if the first one is lost after birth (Anderson and Lovallo 2003).

Censusing of bobcats is difficult because of their secretive nature, low densities, and wide dispersal (Anderson and Lovallo 2003). Although a wide range of techniques has been developed for estimating sizes of bobcat populations, these techniques remain imprecise and inaccurate (Anderson and Lovallo 2003).

No population estimates are available for *L. r. escuinapae*, but the Mexican Government has stated that this subspecies is widespread and numerous, is not specialized in its habitat requirements, and is highly ecologically adaptable (Graciela de la Garza-García, Dirección General de Conservación y Ecología de los Recursos Naturales/General Direction of Conservation and Ecology of Natural Resources, *in litt.* 1991; Hesiquio Benítez-Díaz, CONABIO, *in litt.* 2004). Furthermore, in a recent meeting, Mexican experts noted that there is no evidence of population declines in central and southern Mexico (one of the most disturbed parts of the country) during the past 25 years (Hesiquio Benítez-Díaz, CONABIO, *in litt.* 2004).

Distinct Vertebrate Population Segment

''Species'' is defined by the Act as including any subspecies of fish and wildlife or plants, and any distinct population segment of vertebrate fish or wildlife that interbreeds when mature (16 U.S.C. 1532 (16)). We, along with the National Marine Fisheries Service (National Oceanic and Atmospheric Administration—Fisheries), developed the Policy Regarding the Recognition of Distinct Vertebrate Population Segments (DPS Policy) (61 FR 4722; February 7, 1996) to help us in determining what constitutes a distinct population segment (DPS). Under this policy, we use three elements to assess whether a population under consideration for listing may be recognized as a DPS: (1) Discreteness of the population in relation to the remainder of the species to which it belongs; (2) the significance of the population segment to the species to which it belongs; and (3) the population segment's conservation status in relation to the Act's standards for listing.

The DPS analysis is a stepwise analysis. Significance is considered only when discreteness of the population has been determined, and the conservation status is considered only when both discreteness and significance of the population have been established. Discreteness refers to the isolation of a population from other members of the species and is based on two criteria: (1) Marked separation from other populations of the same taxon resulting from physical, physiological, ecological, or behavioral factors, including genetic discontinuity; or (2) populations delimited by international boundaries. If the population is determined to be discrete, we determine significance by assessing the distinct population segment's importance and/or contribution to the species throughout its range. Measures of significance may include, but are not limited to, the following: (1) Persistence of the discrete population segment in an ecological setting unusual or unique for the taxon; (2) evidence that loss of the discrete population segment would result in a significant gap in the range of the taxon; (3) evidence that the discrete population segment represents the only surviving natural occurrence of the taxon that may be more abundant elsewhere as an introduced population outside its historic range; and (4) evidence that the discrete population segment differs markedly from other populations of the taxon in its genetic characteristics.

If we determine that a population meets the discreteness and significance criteria for a distinct population segment, we evaluate the threats to determine if classification as endangered or threatened is warranted based on the Act's standards. ''Endangered'' means the species is in danger of extinction throughout all or a significant portion of its range. ''Threatened'' means the species is likely to become endangered within the foreseeable future throughout all or a significant portion of its range.

In reviewing the taxonomic information on Mexican bobcat, the available information suggests that the subspecies designation may not be valid. Subsequently, we evaluated the status of the listed population in its range within Mexico to determine whether the listed population met the DPS policy, and if so, whether this population of bobcat should remain listed.

The available information indicates that the bobcat population represented by *L. r. escuinapae* is not discrete. The population is not delineated by any

international political boundary. It is contained entirely within Mexico and its range does not extend to any border between Mexico and another country, particularly the United States. It also does not represent the only bobcat population within Mexico and is not separated by physical, physiological, ecological, or behavioral factors from other bobcat populations. As already stated, the range of *L. r. escuinapae* overlaps with two other putative subspecies that occur in both Mexico and the United States, and there is no evidence that it is biologically distinguishable from them. Therefore, the Mexican bobcat does not constitute a DPS.

Summary of Factors Affecting the Species

Section 4(a)(1) of the Act (16 U.S.C. 1531 *et seq.*) and regulations promulgated to implement the listing provisions of the Act (50 CFR part 424) set forth the procedures for deleting species from the Federal lists. A species may be determined to be an endangered or threatened species on the basis of one or more of the five factors described in section 4(a)(1). The same factors are used to determine if a listed species continues to qualify for listing. These factors and their application to the Mexican bobcat are as follows:

A. Present or Threatened Destruction, Modification, or Curtailment of its Habitat or Range

Distribution of bobcats may be negatively or positively affected by habitat modification (Larivière and Walton 1997; Woolf and Hubert 1998). In a recent meeting convened by the Mexican Government to evaluate the status of bobcats, Mexican experts noted that there is no evidence of population declines in central and southern Mexico during the past 25 years, even in heavily disturbed areas (Hesiquio Benítez-Díaz, CONABIO, *in litt.* 2004). To the contrary, the creation of semi-open areas by fragmentation and clearing of tropical forests may be contributing to a range expansion of Mexican bobcats (López-González *et al.* 1998). This is consistent with information from the United States that suggests that bobcats can easily colonize isolated or over-harvested areas (Anderson and Lovallo 2003), are very tolerant to habitat fragmentation and modification caused by land conversion for agriculture and urbanization (McCord and Cardoza 1982; Woolf and Hubert 1998; Crooks 2002; Riley *et al.* 2003), and modify their behavior to survive in human settings (Tigas *et al.* 2002; Riley *et al.* 2003).

B. Overutilization for Commercial, Recreational, Scientific, or Educational Purposes

Human exploitation appears to be the predominant cause of bobcat mortality (Anderson and Lovallo 2003). Little information is available on utilization of the species in Mexico, but local hunting and trapping for subsistence are possible. According to the Mexican Government, its bobcat populations do not face any conservation problems (Hesiquio Benítez-Díaz, CONABIO, *in litt.* 2004). Thus, the species is not legally protected. The harvest of native Mexican species, including the bobcat, is regulated by the Mexican federal government through the Ecological Equilibrium Law (Ley General de Equilibrio Ecológico) and the Wildlife Law (Ley General de Vida Silvestre) (Jorge G. Alvarez-Romero, CONABIO, *in litt.* 2004). Under the Wildlife Law, utilization of native species on private, communal, state, and federal lands is allowed and restricted to areas referred to as Management Units for the Conservation of Wildlife (Unidades de Manejo para la Conservación de Vida Silvestre [UMAs]). To ensure that the removal of specimens is sustainable, these UMAs must be registered with and have a management plan approved by SEMARNAT. However, to date, there are no UMAs registered for the harvest of Mexican bobcats (Leonel Urbano, SEMARNAT, *in litt.* 2004).

International trade in bobcats is regulated by CITES. International trade in bobcat pelts increased significantly in the 1970s after several species of cats were placed in Appendix I of CITES and commercial trade of their skins was prohibited (Woolf and Hubert 1998). However, between 1975 and 1992, commercial trade in bobcat skins was limited only to specimens originating in Canada and the United States as a result of the inclusion of *L. r. escuinapae* in Appendix I. International trade in Mexican bobcats was reopened in 1993 after transfer of *L. r. escuinapae* from Appendix I to Appendix II in 1992. According to the World Conservation Monitoring Centre (WCMC), between 1993 and 2002, only 155 bobcat specimens were exported from Mexico as trophies (20), live animals (4), skins (1), and undetermined (130). Thus, even after transfer of *L. r. escuinapae* to Appendix II, international trade in Mexican bobcats has been limited. Furthermore, there is no indication of significant illegal trade.

Although there is no information available on the impact of commercial trade on the Mexican bobcat, information from the United States suggests that bobcat populations can withstand high levels of harvest and remain stable or increase, provided there are moderate levels of management (Woolf and Hubert 1998). Modeling suggests that harvest levels of up to 20% have little impact on bobcat populations, depending on prey availability, environmental conditions, poaching levels, disease, and density of competitors (Knick 1990). However, demand for furs from Europe (the main market for bobcat furs), particularly of those originating from wild animals, is expected to continue to decline as a result of animal rights campaigns and stricter import regulations imposed by the European Union. Thus, over-harvest for domestic or international trade does not appear to represent a threat to the bobcat population in Mexico.

C. Disease or Predation

Wild bobcats are susceptible to a wide range of diseases and parasites (Larivière and Walton 1997; Anderson and Lovallo 2003). Mountain lions, wolves, coyotes, and domestic dogs may predate on adult bobcats, and humans may depredate bobcats to protect small livestock (Larivière and Walton 1997; Anderson and Lovallo 2003). However, at the present time, neither disease nor predation is considered to threaten or endanger the species in any portion of its range.

D. Inadequacy of Existing Regulatory Mechanisms

As noted above, Mexico does not grant legal protection to bobcats since it considers that the species is abundant and not at risk. However, it has regulations pertaining to hunting and export of the species (see Overutilization for commercial, recreational, scientific, or educational purposes above). Although illegal take and trade in bobcats probably occur in Mexico, there is no evidence that such activities occur at higher levels than in the United States or Canada, or that they have led to a decline in numbers and/or distribution of the species in the country. Thus, the existing regulatory mechanisms appear to be adequate and sufficient to ensure the long-term survival of the species in Mexico.

E. Other Natural or Manmade Factors

Aside from the factors described above, bobcats may experience mortality due to starvation, vehicular collisions, and incidental poisoning (*e.g.*, anticoagulant rodenticides and contaminants) (Tigas *et al.* 2002; Cain *et al.* 2003; Anderson and Lovallo 2003; Riley *et al.* 2003). However, none of these has led to significant declines in

the distribution and abundance of bobcats in any portion of their range.

Summary of Findings

The Service has reviewed the information presented in the original petition, the literature cited in that petition, all public comments received, and other available literature and information. On the basis of the best scientific and commercial information available, the Service's 12-month finding is that the petitioned action is warranted. The best available information indicates that the Mexican bobcat may not constitute a separate subspecies and does not constitute a distinct population segment (DPS). Furthermore, despite habitat modification by humans, the bobcat remains abundant throughout Mexico and its range appears to be expanding. Therefore, neither listing of the Mexican bobcat as endangered, nor its downlisting to threatened, are appropriate. Accordingly, we herein propose to remove the Mexican bobcat, *L. r. escuinapae*, from the List of Endangered and Threatened Wildlife promulgated under the Endangered Species Act of 1973, as amended. Public comments on this proposed rule will be solicited, as will peer review (see subsequent sections of this FR notice).

Available Conservation Measures

Conservation measures provided to species listed as endangered or threatened under the Endangered Species Act include recognition, recovery actions, requirements for Federal protection, and prohibitions against certain practices. Recognition through listing results in public awareness, and encourages and results in conservation actions by Federal and State governments, private agencies and groups, and individuals.

Section 7(a) of the Act, as amended, and as implemented by regulations at 50 CFR 402, requires Federal agencies to evaluate the impact of their actions within the United States or on the high seas on any species that is proposed or listed as endangered or threatened, and on critical habitat of an endangered or threatened species, if any is designated. Because *L. r. escuinapae* is not native to the United States, no critical habitat has been designated for this taxon, in accordance with 50 CFR 424.12(h). However, permits for import and export, foreign and interstate commerce, and take within the United States are currently required. Delisting of the Mexican bobcat under the Act would eliminate the need for the issuance of ESA permits by the Service's Division of Management Authority (DMA), and the required consultation with the Service's Division of Scientific Authority (DSA) under Section 7 of the Act prior to the issuance of any permit.

The Act and its implementing regulations set forth a series of prohibitions and exceptions that generally apply to all endangered wildlife. The prohibitions, codified at 50 CFR 17.21, in part, make it illegal for any person subject to the jurisdiction of the United States to take (includes harass, harm, pursue, hunt, shoot, wound, kill, trap, capture, or collect; or to attempt any of these), within U.S. territory or on the high seas, import or export, ship in interstate commerce in the course of a commercial activity, or sell or offer for sale in interstate or foreign commerce, any listed species. It also is illegal to possess, sell, deliver, carry, transport, or ship any such wildlife that has been taken illegally. Certain exceptions apply to employees or agents of the Service and State conservation agencies.

Permits may be issued to carry out otherwise prohibited activities involving endangered wildlife species under certain circumstances. Regulations governing permits are codified at 50 CFR 17.22 and 17.23. Such permits are available for scientific research purposes, for enhancement of the propagation or survival of the species, and/or for incidental take in the course of otherwise lawful activities. Because the bobcat is listed in Appendix II of CITES, a CITES permit is already required for export from the United States. In addition, shipments originating outside the United States must be accompanied by an export permit or re-export certificate issued by the exporting country. Under this rulemaking, no ESA permit would be required for import or export of Mexican bobcats to or from the United States.

Public Comments Solicited

The Service intends that any final action resulting from this proposal will be based on the most accurate and up-to-date information possible. Therefore, comments or suggestions from the public, other concerned governmental agencies, the scientific community, industry, or any other interested party concerning this proposed rule are hereby solicited. Comments particularly are sought concerning the taxonomy, population status, commercial trade, or other relevant data concerning any threats to the Mexican bobcat. Final action on this proposed rule will take into consideration the comments and any additional information received by the Service, and such communications may lead to a final action that differs from this proposal.

Our practice is to make comments, including names and home addresses of respondents, available for public review during regular business hours. Commenters may request that we withhold their home addresses, and we will honor these requests to the extent allowable by law. In some circumstances, we may also withhold a commenter's identity, as allowable by law. If you wish us to withhold your name or address, you must state this request prominently at the beginning of your comment. However, we will not consider anonymous comments. To the extent consistent with applicable law, we will make all submissions from organizations or businesses, and from individuals identifying themselves as representatives or officials of organizations or businesses, available for public comment in their entirety. Comments and materials received will be available for public inspection, by appointment, during normal business hours at the above address.

The Endangered Species Act provides for one or more public hearings on this proposal, if requested. Requests must be received within 45 days of the date of the publication of this proposal in the **Federal Register**. Such requests must be made in writing and be addressed to: Chief, Division of Scientific Authority, 4401 North Fairfax Drive, Room 750, Arlington, Virginia 22203.

Peer Review

In accordance with our policy published on July 1, 1994 (59 FR 34270), we will seek expert opinions of at least three appropriate independent specialists regarding this proposed rule. The purpose of such review is to ensure that listing decisions are based on scientifically sound data, assumptions, and analysis. We will send copies of this proposed rule immediately following publication in the **Federal Register** to these peer reviewers.

National Environmental Policy Act

We have determined that Environmental Assessments and Environmental Impact Statements, as defined under the authority of the National Environmental Policy Act of 1969, need not be prepared in connection with regulations adopted pursuant to section 4(a) of the Endangered Species Act of 1973, as amended.

References Cited

Allen, J. A. 1903. A new deer and a new lynx from the State of Sinaloa, Mexico.

Bulletin of American Museum of Natural History, 19:613–615.

Anderson, E. M., and M. J. Lovallo. 2003. Bobcat and lynx, pages 758–786, in Wild mammals of North America: Biology, management, and conservation. Second Edition. G. A. Feldhamer, B. C. Thompson, and J. A. Chapman, eds. The John Hopkins University Press, Baltimore, Maryland.

Banfield, A.W. 1974. The mammals of Canada. University of Toronto Press, Toronto, Canada.

Cain, A. T., V. R. Tuovila, D. G. Hewitt, and M. E. Tewes. 2003. Effects of a highway and mitigation projects on bobcats in southern Texas. Biological Conservation, 114:189–197.

Crooks, K. R. 2002. Relative sensitivities of mammalian carnivores to habitat fragmentation. Conservation Biology, 16:488–502.

Hall, E. R., and K. R. Kelson 1959. The mammals of North America. The Ronald Press Company, New York.

Government of the United States. 1992. Proposal to Transfer *Felis rufa escuinapae* from Appendix I to Appendix II. Proceedings of the 8th Meeting of the Conference of the Parties to CITES, CITES Secretariat, Lausanne, Switzerland.

Gonzalez, C.B., and C. G. Leal. 1984. [Forest Mammals of the Mexican Basin.] Programme on Man and the Biosphere (UNESCO) and Editorial Limusa. Mexico City (in Spanish).

Knick, S. T. 1990. Ecology of bobcats relative to exploitation and prey decline in southeastern Idaho. Wildlife Monographs, 108:1–42.

Lariviére, S., and L. R. Walton. 1997. *Lynx rufus*. Mammalian Species, 563:1–8.

López-González, C. A., A. González-Romero, and J. W. Laundre. 1998. Range extension of the bobcat (Lynx rufus) in Jalisco, Mexico. Southwestern Naturalist, 43:103–105.

McCord, C. M., and J. E. Cardoza. 1982. Bobcat and Lynx, pages 728–766, *in* Wild mammals of North America: Biology, management and economics. J. A. Chapman and G. A. Feldhamer, eds. John Hopkins University Press, Baltimore, Maryland.

Nowell, K., and P. Jackson. 1996. Wild Cats: Status Survey and Conservation Action Plan. IUCN/SSC Cat Specialist Group, IUCN, Gland, Switzerland.

Riley, S. P. D., R. M. Sauvajot, T. K. Fuller, E. C. York, D. A. Kamradt, C. Bromley, and R. K. Wayne. 2003. Effects of urbanization and habitat fragmentation on bobcats and coyotes in southern California. Conservation Biology, 17:566–576.

Rollings, C. T. 1945. Habits, food and parasites of the bobcat in Minnesota. Journal of Wildlife Management, 9:131–145.

Samson, F. B. 1979. Multivariate analysis of cranial characteristics among bobcats with a preliminary discussion of the number of subspecies, pages 80–86, *in* Proceedings of the 1979 Bobcat Research Conference. P. C. Escherich and L. Blum, eds. Science and Technology Series 6, National Wildlife Federation, Washington, D.C.

Tigas, L. A., D. H. Van Vuren, and R. M. Sauvajot. 2002. Behavioral responses of bobcats and coyotes to habitat fragmentation and corridors in an urban environment. Biological Conservation, 108:299–306.

Wilson, D. E., and S. Ruff. 1999. The Smithsonian Book of North American Mammals. Smithsonian Institution Press, Washington D.C.

Woloszyn, D., and B. W. Woloszyn. 1982. [The Mammals of Sierra de La Laguna Baja California Sur.] Consejo Nacional de Ciencia y Tecnología, Mexico (in Spanish).

Woolf, A., and G. F. Hubert, Jr. 1998. Status and management of bobcats in the United States over three decades: 1970s–1990s. Wildlife Society Bulletin, 26:287–293.

Author

The primary author of this proposed rule is Dr. Javier Alvarez, Division of Scientific Authority, U.S. Fish and Wildlife Service, 4401 North Fairfax Drive, Room 750, Arlington, Virginia 22203.

List of Subjects in 50 CFR Part 17

Endangered and threatened species, Exports, Imports, Reporting and recordkeeping requirements, Transportation.

Proposed Regulation Promulgation

Accordingly, we hereby propose to amend part 17, subchapter B of chapter I, title 50 of the Code of Federal Regulations, as set forth below:

PART 17—[AMENDED]

1. The authority citation for part 17 continues to read as follows:

Authority: 16 U.S.C. 1361–1407; 16 U.S.C. 1531–1544; 16 U.S.C. 4201–4245; Pub. L. 99–625, 100 Stat. 3500; unless otherwise noted.

§ 17.11 [Amended]

2. Amend § 17.11 (h) by removing the entry ''Bobcat, Mexican'' under MAMMALS from the List of Endangered and Threatened Wildlife.

Dated: April 27, 2005.

Matt Hogan,

Acting Director, Fish and Wildlife Service.

[FR Doc. 05–10002 Filed 5–18–05; 8:45 am]

BILLING CODE 4310–55–P

Notices

Federal Register
Vol. 70, No. 96
Thursday, May 19, 2005

This section of the FEDERAL REGISTER contains documents other than rules or proposed rules that are applicable to the public. Notices of hearings and investigations, committee meetings, agency decisions and rulings, delegations of authority, filing of petitions and applications and agency statements of organization and functions are examples of documents appearing in this section.

DEPARTMENT OF AGRICULTURE

Forest Service

Ravalli County Resource Advisory Committee

AGENCY: Forest Service, USDA.

ACTION: Notice of meeting.

SUMMARY: The Ravalli County Resource Advisory Committee will be meeting to discuss 2005 projects, and hold a short public forum (question and answer session). The meeting is being held pursuant to the authorities in the Federal Advisory Committee Act (Pub. L. 92–463) and under the Secure Rural Schools and Community Self-Determination Act of 2000 (Pub. L. 106–393). The meeting is open to the public.

DATES: The meeting will be held on May 24, 2005, 6:30 p.m.

ADDRESSES: The meeting will be held at the Ravalli County Administration Building, 215 S. 4th Street, Hamilton, Montana. Send written comments to Dan Ritter, Acting District Ranger, Stevensville Ranger District, 88 Main Street, Stevensville, MT 59870, by facsimile (406) 777–7423, or electronically to *dritter@fs.fed.us.*

FOR FURTHER INFORMATION CONTACT: Dan Ritter, Acting Stevensville District Ranger and Designated Federal Officer, Phone: (406) 777–5461.

Dated: May 12, 2005.

David T. Bull,

Forest Supervisor.

[FR Doc. 05–9977 Filed 5–18–05; 8:45 am]

BILLING CODE 3410–11–M

DEPARTMENT OF AGRICULTURE

Forest Service

Clearwater and Nez Perce National Forests

AGENCY: Forest Service, USDA.

ACTION: Notice of Adjustment.

SUMMARY: A Notice of Intent to prepare an environmental impact statement to revise Land and Resource Management Plans was published in the **Federal Register** of September 30, 2004 (69 FR 58384). The Clearwater and Nez Perce National Forests are adjusting the forest plan revision process from compliance with the 1982 land and resource management planning regulations to compliance with new regulations published in the **Federal Register** of January 5, 2005 (70 FR 1062)

Public Involvement: The Nez Perce and Clearwater National Forests are providing for additional public engagement through direct mailings, the Web site, and meetings when requested by individuals, groups, or agencies.

FOR FURTHER INFORMATION CONTACT: Elayne Murphy, Public Affairs Officer, at 208–935–2513. Additional information will also be posted on the Clearwater and Nez Perce National Forest planning Web page at *http://www.fs.fed.us/cnpz/.*

SUPPLEMENTARY INFORMATION: A 90-day public comment period on the proposed action to revise the land and resource management plans (forest plans) for the Nez Perce and Clearwater National Forests ended on December 29, 2004. Analysis of the comments received has been completed. Collaboration with the public on the proposed plan will occur through direct mailings, the Web site, and meetings when requested by individuals, groups, or agencies. The remaining forest plan revision schedule will be approximately as follows:

- Fall 2005: Release proposed forest plans and start 90-day comment period.
- Fall 2006: Release final forest plans and start 30-day public objection period.
- Winter 2007: Issue final decision and start plan implementation.

The Web site provides additional information regarding the decision to transition to the new planning regulations, discussion of plan revision elements already completed before making this transition, and other details.

Dated: May 5, 2005.

Larry J. Dawson,

Supervisor, Clearwater National Forest.

Dated: May 5, 2005.

Jane L. Cottrell,

Supervisor, Nez Perce National Forest.

[FR Doc. 05–9978 Filed 5– 8–05; 8:45 am]

BILLING CODE 3410–11–M

DEPARTMENT OF AGRICULTURE

Forest Service

Kootenai and Idaho Panhandle National Forests Land and Resource Management Plan Revision

AGENCY: Forest Service, USDA.

ACTION: Notice of adjustment.

SUMMARY: Kootenai and Idaho Panhandle National Forests here referred to as the Kootenai and Idaho Panhandle Zone (KIPZ) located in Lincoln, Sanders, and Flathead counties in Montana; Bonner, Boundary, Kootenai, Shoshone, Benewah, Latah and Clearwater counties in Idaho; and Pend Oreille county in Washington. A Notice of Intent to prepare an environmental impact statement to revise Land and Resource Management Plans was published in the **Federal Register** of April 30, 2002 (67 FR 21210). Kootenai and Idaho Panhandle Zone is adjusting the forest plan revision process from compliance with the 1982 land and resource management planning regulations to compliance with new regulations published in the **Federal Register** of January 5, 2005 (70 FR 1062).

Public Involvement: Scheduled meetings and details of other public involvement and collaborative opportunities will be posed on the Kootenai and Idaho Panhandle (KIPZ) Web site, at *www.fs.fed.us./kipz.* People interested in getting on our mailing list should contact Jodi Kramer at (208) 765–7235, or e-mail at *jodikramer@fs.fed.us.*

FOR FURTHER INFORMATION CONTACT: Contact Kirsten Kaiser, Co-Team Leader, Kootenai National Forest, at (406) 293–6211 or e-mail at *kkaiser@fs.fed.us,* or Gary Ford Co-Team Leader, Idaho Panhandle National Forests, at (208) 765–7478 or e-mail at *glford@fs.fed.us.*

Responsible Officials: Bob Castaneda, Supervisor of the Kootenai National Forest, 1101 U.S. Highway 2 West, Libby, MT 59923 and Ranotta McNair, Supervisor of the Idaho Panhandle National Forests, 3815 Schreiber Way, Coeur d'Alene, Idaho 83815–8363.

SUPPLEMENTARY INFORMATION: A notice of Intent to prepare an environmental impact statement to revise Land and Resource Management Plans was published in the **Federal Register** of April 30, 2002 (67 FR 21210). Kootenai

and Idaho Panhandle Zone is adjusting the forest plan revision process from compliance with the 1982 land and resource management planning regulations to compliance with new regulations published in the **Federal Register** of January 5, 2005 (70 FR 1062).

This adjustment will result in the following:

1. The Responsible Official will now be the Forest Supervisors.

2. Each National Forest will establish an Environmental Management System prior to a decision on the revised forest plans.

3. The emphasis on public involvement will shift from comment on a range of alternative plans, to iterative public-Forest Service collaboration, intended to meld a single option into a broadly supported plan.

For additional information on public meeting, other public involvement and collaborative opportunities, procedural differences between the 1982 and 2004 planning rules, timelines, reasoning behind our decision to transition to the new planning regulations, information on plan revision elements we have already completed before making this transition, and other details, consult the Kootenai, Idaho Panhandle Web site: *www.fs.fed.us./kipz.*

Dated: May 12, 2005.

Bob Castaneda,

Forest Supervisor, Kootenai National Forest.

[FR Doc. 05–9979 Filed 5–18–05; 8:45 am]

BILLING CODE 3410–11–M

DEPARTMENT OF AGRICULTURE

Forest Service

Bitterroot, Flathead and Lolo National Forests Land and Resource Management Plan Revision

AGENCY: Forest Service, USDA.

ACTION: Notice of Adjustment.

SUMMARY: Bitterroot, Flathead and Lolo National Forests here referred to as the Western Montana Planning Zone in Ravalli, Missoula, Mineral, Sanders, Lake, Flathead, Lincoln, Lewis and Clark, Granite, and Powell Counties, Montana, and Idaho County, Idaho. A Notice of Intent to prepare an environmental impact statement to revise Land and Resource Management Plans was published in the **Federal Register** of January 20, 2004 (69 FR 2699). The Western Montana Planning Zone is adjusting the forest plan revision process from compliance with the 1982 land and resource management planning regulations to compliance with new regulations published in the **Federal Register** of January 5, 2005 (70 FR 1062).

Public Involvement: Scheduled meetings and details of other public involvement opportunities will be posted on the Western Montana Planning zone Web site, at *http://www.fs.fed.us/rl/wmpz/.* To get on the mailing list contact Claudia Narcisco at (406) 329–3795, or e-mail, *cnarcisco@fs.fed.us.* People currently on the mailing list will remain.

FOR FURTHER INFORMATION CONTACT: Lee Kramer, Interdisciplinary Team Leader, Lolo National Forest, Fort Missoula, Bldg., 24, Missoula, MT 59084, (406) 392–3848 or e-mail, *lkramer@fs.fed.us;* or see the Web site at *http://www.fs.fed.us/rl/wmpz/.*

Responsible Officials: David Bull, Supervisor, Bitterroot National Forest, 1801 North 1st St., Hamilton, MT 59840. Catherine Barbouletos, Supervisor, Flathead National Forest, 1935 Third Ave., Kalispell, Mt 59901. Deborah Austin, Supervisor, Lolo National Forest, Building 24, Fort Missoula, Missoula, MT 59804.

SUPPLEMENTARY INFORMATION: A Notice of Intent to prepare an environmental impact statement to revise Land and Resource Management Plans was published in the **Federal Register** of January 20, 2004 (69 FR 2699). The Western Montana Planning zone is adjusting the forest plan revision process from compliance with the 1982 planning regulations, to compliance with new regulations published in the **Federal Register** of January 5, 2005 (70 FR 1062).

This adjustment will result in the following:

1. The Responsible Official(s) will be each Forest Supervisor.

2. Each National Forest will establish an Environmental Management System prior to completion of the revised forest plans.

3. The emphasis on public involvement will shift from public comment on a broad range of alternative plans, to iterative public-Forest Service collaboration on a single option to arrive at a broadly supported plan for each Forest.

Public collaboration will begin in late spring of 2005, with each Forest using some combination of the following methods: (1) Posting draft desired conditions and supporting maps on the Web site; (2) open houses; (3) invited presentations; (4) newsletters; and (5) on-going collaborative dialogue in community-based working groups. The initial focal points of the collaborative process will be: (1) Desired conditions; (2) suitability of areas for various purposes; and (3) objectives to help move toward the desired conditions. This phase of collaboration is expected to be completed by fall of 2005.

Time Schedule: The remaining forest plan revision schedule will be approximately as follows:

- Fall 2005: Release proposed forest plans and start 90-day public comment period.
- Summer 2006: Release final forest plans and start 30-day public objection period.
- Fall 2006: Issue final decision and start plan implementation.

The web site provides additional information regarding the decision to transition to the new planning regulations, discussion of plan revision elements already completed before making this transition, and other details.

Dated: May 12, 2005.

David T. Bull,

Supervisor, Bitterroot National Forest.

Dated: May 12, 2005.

Catherine Barbouletos,

Supervisor, Flathead National Forest.

Dated: May 12, 2005.

Deborah L. R. Austin.

Supervisor, Lolo National Forest.

[FR Doc. 05–9980 Filed 5–18–05; 8:45 am]

BILLING CODE 3410–11–M

ANTITRUST MODERNIZATION COMMISSION

Request for Public Comment

AGENCY: Antitrust Modernization Commission.

ACTION: Request for public comment.

SUMMARY: The Antitrust Modernization Commission requests comments from the public regarding specific questions relating to the issues selected for Commission study.

DATES: Comments are due by June 17, July 1, or July 15, 2005, as specified below.

ADDRESSES: By electronic mail: *comments@amc.gov.* By mail: Antitrust Modernization Commission, Attn: Public Comments, 1120 G Street, NW., Suite 810, Washington, DC 20005.

FOR FURTHER INFORMATION CONTACT: Andrew J. Heimert, Executive Director & General Counsel, Antitrust Modernization Commission. Telephone: (202) 233–0701; e-mail: *info@amc.gov.* Internet: *http://www.amc.gov.*

SUPPLEMENTARY INFORMATION: The Antitrust Modernization Commission was established to ''examine whether

the need exists to modernize the antitrust laws and to identify and study related issues.'' Antitrust Modernization Commission Act of 2002, Public Law 107–273, § 11053, 116 Stat. 1856. In conducting its review of the antitrust laws, the Commission is required to ''solicit the views of all parties concerned with the operation of the antitrust laws.'' *Id.* By this request for comments, the Commission seeks to provide a full opportunity for interested members of the public to provide input regarding certain issues selected for Commission study. From time to time, the Commission may issue additional requests for comment on issues selected for study.

Comments should be submitted in written form. Comments may be submitted on more than one topic area, but comments on each topic should be submitted in a separate document. Each comment should identify the topic to which it relates. Comments need not address every question within each topic. Comments exceeding 1500 words on a particular topic should include a brief (less than 250 word) summary. Commenters may submit additional background materials (such as articles, data, or other information) relating to the topic by separate attachment.

Comments should identify the person or organization submitting the comments. If comments are submitted by an organization, the submission should identify a contact person within the organization. Comments should include the following contact information for the submitter: An address, telephone number, and email address (if available). Comments submitted to the Commission will be made available to the public in accordance with Federal laws.

Comments may be submitted either in hard copy or electronic form. Electronic submissions may be sent by electronic mail to *comments@amc.gov.* Comments submitted in hard copy should be delivered to the address specified above, and should enclose, if possible, a CD–ROM or a 3-½ inch computer diskette containing an electronic copy of the comment. The Commission prefers to receive electronic documents (whether by email or on CD–ROM/diskette) in portable document format (.pdf), but also will accept comments in Microsoft Word format.

The AMC has issued this request for comments pursuant to its authorizing statute and the Federal Advisory Committee Act. Antitrust Modernization Commission Act of 2002, Public Law 107–273, § 11053, 116 Stat. 1758, 1856; Federal Advisory Committee Act, 5 U.S.C. app., 10(a)(3).

Topics for Comment

The Commission requests comment on the following nine topics. Comments are requested to be submitted by the date specified.

Comments Requested by June 17, 2005

I. Remedies

A. Treble Damages

1. Are treble damage awards appropriate in civil antitrust cases? Please support your response, addressing issues such as inducements to private enforcement, evidence indicating that treble damage awards have led to either over-deterrence or under-deterrence, the probability of antitrust violations being detected, and how ''optimal'' deterrence levels can best be determined.

2. Should other procedural changes be considered to address issues relating to treble damage awards, such as providing courts with discretion in awarding treble (or higher) damages, limiting the availability of treble damages to certain types of offenses (*e.g., per se* unlawful price fixing versus conduct subject to rule of reason analysis), or imposing a heightened burden of proof?

B. Prejudgment Interest

1. Should successful antitrust plaintiffs be awarded pre-complaint interest, cost of capital, or opportunity cost damages?

2. Are the factors used to determine when prejudgment interest is available set forth in 15 U.S.C. 15(a)(1)–(3) appropriate? If not, how should they be changed?

C. Attorneys' Fees

1. Should courts award attorneys' fees to successful antitrust plaintiffs?

2. Are there circumstances in which a prevailing defendant should be awarded attorneys' fees?

3. In areas of law other than antitrust, how effective is fee shifting as a tool to promote private enforcement?

D. Joint and Several Liability, Contribution, and Claim Reduction

1. Should Congress and/or the courts change the current antitrust rules regarding joint and several liability, contribution, and claim reduction?

2. Is the evolution of rules regarding joint and several liability, contribution, and claim reduction in other areas of the law instructive in the context of antitrust law?

E. Remedies Available to the Federal Government

1. Should DOJ and/or the FTC have statutory authority to impose civil fines for substantive antitrust violations? If so, in what circumstances and what types of cases should such fines be available? If DOJ and/or the FTC are given such authority, how, if at all, should it affect the availability of damages awarded to private plaintiffs?

2. Should Congress clarify, expand, or limit the FTC's authority to seek monetary relief under 15 U.S.C. 53(b)?

F. Private Injunctive Relief

1. Has the ability of states and private plaintiffs to seek injunctive relief under 15 U.S.C. 26 benefited consumers or caused harm to businesses or others? Please provide any specific examples, evidence, or analyses supporting this assessment. What would be the consequences if the availability of injunctive relief to states and private plaintiffs under 15 U.S.C. 26 were changed? Should standing to pursue injunctive relief under federal antitrust law be different for states than it is for private parties?

2. Are there currently sufficient safeguards (*e.g.*, judicial discretion and the Cargill requirement that private plaintiffs establish antitrust injury) to limit injunctions to appropriate circumstances?

G. Indirect Purchaser Litigation

1. What are the costs and benefits of antitrust actions by indirect purchasers, including their role and significance in the U.S. antitrust enforcement system? Please be as specific as possible.

2. What burdens, if any, are imposed on courts and litigants by the difficulty of consolidating state court antitrust actions brought on behalf of indirect purchasers with actions brought on behalf of direct purchasers, and how have courts and litigants responded to them? What impact, if any, will the Class Action Fairness Act of 2005 have in this regard?

3. Does Illinois Brick's refusal to provide indirect purchasers with a right of recovery under federal antitrust law serve or disserve federal antitrust policies, such as promoting optimal enforcement, providing redress to victims of antitrust violations, preventing multiple awards against a defendant, and avoiding undue complexity in damage calculations?

4. What actions, if any, should Congress take to address the inconsistencies between state and federal rules on antitrust actions by indirect purchasers? For example, should Congress establish Illinois Brick as the uniform national rule by preempting Illinois Brick repealer statutes, or should it overrule Illinois Brick? If Congress were to overrule

Illinois Brick, should it also overrule Hanover Shoe, so that recoveries by direct purchasers can be reduced to reflect recoveries by indirect purchasers (or vice versa)? Assuming both direct and indirect purchaser suits continue to exist, what procedural mechanisms should Congress and the courts adopt to facilitate consolidation of antitrust actions by indirect and direct purchasers?

Comments Requested by July 1, 2005

II. Robinson-Patman Act

1. What are the benefits and costs of the Robinson-Patman Act as currently enforced? Does the Robinson-Patman Act promote or reduce competition and consumer welfare? If so, how? What other benefits does it afford or costs does it impose, if any?

2. What purposes should the Robinson-Patman Act serve?

3. Should the Robinson-Patman Act be repealed or modified, or its interpretation by the courts altered? Please identify specific changes and explain why they should be adopted. For example:

a. Should private plaintiffs asserting Robinson-Patman claims be required to prove ''antitrust injury,'' *i.e.*, proof of injury reflecting the anticompetitive effect of the challenged conduct?

b. Should the inference of harm to competition under recognized in FTC v. *Morton Salt Co.*, 334 U.S. 37 (1948), be modified, *e.g.*, by requiring plaintiffs to make a showing of harm to competition similar to that required to establish a Sherman Act violation?

c. Does limiting the substantive provisions of the Robinson-Patman Act to the sale of commodities, not services, make sense in today's economy?

d. What role should buyer market power play in applying the Robinson-Patman Act?

4. To what extent do state antitrust laws prohibit price discrimination that is also prohibited by the Robinson-Patman Act? Would repeal or reform of the Robinson-Patman Act affect the likelihood that states would adopt their own prohibitions on price discrimination? How, if at all, would repeal or reform of the Robinson-Patman Act affect the amount of litigation under such state laws?

Comments Requested by July 15, 2005

III. Enforcement Institutions

A. Dual Federal Merger Enforcement

1. Should merger enforcement continue to be administered by two different Federal agencies? What are the advantages and disadvantages resulting from having two different federal antitrust enforcement agencies reviewing mergers? For example, does it result in bureaucratic duplication, inconsistency in treatment, more thorough enforcement, beneficial diversity in enforcement perspectives, or competition between antitrust enforcement agencies?

2. Should merger enforcement authority be reallocated between the FTC and DOJ? If so, how should it be reallocated? Please provide specific reasons for proposed reallocations.

3. Commenters have advised that disagreements between the FTC and DOJ concerning the clearance of mergers for review by one or the other agency have unreasonably delayed regulatory review in some cases. Should the FTC–DOJ merger review clearance process be revised to make it more efficient? If so, how?

B. Differential Merger Enforcement Standards

1. Does the standard the DOJ must meet to obtain a preliminary injunction to block a merger differ, as a practical matter, from that the FTC must meet? Has any such difference affected the outcome of a decision, or might it reasonably be expected to affect the outcome?

2. To the extent there is a difference in legal standards, should the different standards be harmonized? If so, how?

3. Should there continue to be a difference in the procedural aspects of Federal agency challenges to mergers, specifically that the FTC can commence an administrative proceeding in addition to seeking a court order to block a transaction? If the procedural aspects of agency challenges to mergers should be harmonized, how should that be done?

4. What practical burdens are imposed on private parties by the FTC's policy of pursuing permanent relief through an administrative proceeding (in some instances) after failing to obtain a preliminary injunction?

C. Allocation of Merger Enforcement Among States, Private Plaintiffs, and Federal Agencies

1. What role should state attorneys general play in merger enforcement? Please support your response with specific examples, evidence, and analysis regarding burden, benefits, delay, and/or uncertainty involved in multiple State and Federal merger reviews.

2. Should merger enforcement be limited to the federal level, or should other steps be taken to ensure that a single merger will not be subject to challenge by multiple private and government enforcers? To what extent has the protocol for coordination of simultaneous merger investigations established by the federal enforcement antitrust agencies and state attorneys general succeeded in addressing issues of burden, delay, and/or uncertainty associated with multiple state and federal merger review?

3. What role should private parties play in merger enforcement, and what authority should they have to seek to enjoin a merger? Please support your response with specific examples, evidence, and analysis regarding burden, benefits, delay, and/or uncertainty involved.

4. What lessons, if any, can be learned from Europe's referral (or ''one-stop shop'') system of allocating merger enforcement between the EC and Member States? How does the more regulation-oriented European tradition (as opposed to a more enforcement-oriented U.S. tradition) affect any comparison of the two systems?

D. Role of States in Enforcing Federal Antitrust Laws Outside the Merger Area

1. What role should state attorneys general play in non-merger civil enforcement? To what extent is state *parens patriae* standing useful or needed? Please support your response with specific examples, evidence, and analysis?

2. Should state and federal enforcers divide responsibility for non-merger civil antitrust enforcement based on whether the primary locus of alleged harm (or primary markets affected) is intrastate, interstate, or global? If so, how should such an allocation be implemented?

IV. Exclusionary Conduct

1. What are the circumstances in which a firm's refusal to deal with (or discrimination against) rivals in adjacent markets violates Section 2 of the Sherman Act? Does the Supreme Court's decision in *Verizon Communications*, Inc. v. *Law Offices of Curtis V. Trinko, LLP*, 540 U.S. 398 (2004), state an appropriate legal standard in this respect?

2. Should the essential facilities doctrine constitute an independent basis of liability for single-firm conduct under Section 2 of the Sherman Act?

3. What should be the standards for determining when a firm's product bundling or bundled pricing violates Section 2 of the Sherman Act?

4. How should the standards for exclusionary or anticompetitive conduct be determined (*e.g.*, through legislation, judicial development, *amicus* efforts by

DOJ and FTC), particularly if you believe the current standards are not appropriate or clear?

V. Immunities & Exemptions

A. General Immunities & Exemptions

1. In what circumstances, and with what limitations, should Congress provide antitrust immunities and exemptions? In your response, please address the following questions:

a. What generally applicable methodology, if any, should Congress use to assess the costs and benefits of immunities and exemptions?

b. Should Congress analyze different types of immunities and exemptions differently? Are those that do not protect core anticompetitive conduct (*e.g.*, price fixing) preferable to those that exempt all joint activities? Are those that eliminate, for example, treble damages, but retain single damage liability acceptable? For example, does the National Cooperative Research and Production Act, 15 U.S.C. 4301–06, provide a helpful alternative approach to blanket exemptions?

c. Should Congress subject immunities and exemptions to a ''sunset'' provision, thereby requiring congressional review and action at regular intervals as a condition of renewal?

d. Should the proponents of an immunity or exemption bear the burden of proving that the benefits exceed the costs?

2. The Commission intends to conduct a general evaluation of antitrust immunities and exemptions, and currently contemplates focusing, for illustrative purposes, on the first eight immunities and exemptions listed below (a.–h.). Please provide any relevant information about any of the immunities and exemptions below, including their costs, benefits, and impact upon commerce.

a. Capper-Volstead Act. 7 U.S.C. 291–92

b. Non-profit agricultural cooperatives exemption. 15 U.S.C. 17.

c. Agricultural Marketing Agreement Act. 7 U.S.C. 608b, 608c.

d. Fishermen's Collective Marketing Act. 15 U.S.C. 521–22.

e. Webb-Pomerene Export Act. 15 U.S.C. 61–66.

f. Export Trading Company Act. 15 U.S.C. 4001–21.

g. McCarran-Ferguson Act. 15 U.S.C. 1011–15.

h. Shipping Act. 46 U.S.C. app. 1701 *et seq.*

i. Anti-Hog-Cholera Serum and Hog-Cholera Virus Act. 7 U.S.C. 852.

j. Airline flight schedule exemption. 49 U.S.C. 40129.

k. Air transportation exemption. 49 U.S.C. 41308–09.

l. Baseball exemption. See, e.g., *Fed. Baseball Club of Baltimore, Inc.* v. *Nat'l League of Prof'l Baseball Clubs*, 259 U.S. 200 (1922); *Toolson* v. *New York Yankees, Inc.*, 346 U.S. 356 (1953); *Flood* v. *Kuhn*, 407 U.S. 258 (1972); Curt Flood Act, Pub. L. 105–297, 2, 112 Stat. 2824 (1998).

m. Charitable Donation Antitrust Immunity Act. 15 U.S.C. 37–37a.

n. Defense Production Act. 50 U.S.C. app. 2158.

o. Filed rate/Keogh doctrine. See, e.g., *Keogh* v. *Chicago & N. W. Ry. Co.*, 260 U.S. 156 (1922).

p. Health Care Quality Improvement Act. 42 U.S.C. 11101–52.

q. Labor exemptions (statutory and non-statutory). See, e.g., 15 U.S.C. 17; 29 U.S.C. 52, 101–10, 113–15, 151–169; *Connell Constr. Co.* v. *Plumbers & Steamfitters Local Union No. 100*, 421 U.S. 616 (1975).

r. Local Government Antitrust Act. 15 U.S.C. 34–36.

s. Medical resident matching program exemption. 15 U.S.C. 37b.

t. Motor transportation exemption. 49 U.S.C. 13703.

u. National Cooperative Research and Production Act. 15 U.S.C. 4301–06.

v. Natural Gas Policy Act. 15 U.S.C. 3364(e).

w. Need-Based Educational Aid Act. 15 U.S.C. 1 note.

x. Newspaper Preservation Act. 15 U.S.C. 1801–04.

y. Railroad transportation exemption. 49 U.S.C. 10706.

z. Small Business Act. 15 U.S.C. 638(d), 640.

aa. Soft Drink Interbrand Competition Act. 15 U.S.C. 3501–03.

bb. Sports Broadcasting Act. 15 U.S.C. 1291–95.

cc. Standard Setting Development Organization Advancement Act. 15 U.S.C. 4301–05, 4301 note.

dd. Television Program Improvement Act. 47 U.S.C. 303c.

ee. United States Postal Service exemption. See, e.g., *United States Postal Serv.* v. *Flamingo Indus. Ltd.*, 540 U.S. 736 (2004).

B. State Action Doctrine

1. Should courts change or clarify the application of the state action doctrine?

a. Do courts currently interpret the ''clear articulation'' prong of the state action doctrine so as to immunize conduct only in circumstances in which the state intended to displace competition? Do courts unduly rely on ''foreseeability'' analysis in applying the ''clear articulation'' prong?

b. Should courts rely on the elements proposed by the FTC Staff's State Action Task Force (state authorization of conduct at issue and deliberate adoption of a policy to displace competition in the manner at issue) to determine whether the ''clear articulation'' prong is satisfied? *See* Federal Trade Commission Staff, Report Of The State Action Task Force 51 (Sept. 2003) (''FTC Report'').

c. Should there be other changes to interpretation and application of the ''clear articulation'' prong?

2. Should courts change or clarify application of the active supervision prong?

a. Do courts currently interpret the ''active supervision'' prong of the state action doctrine so as to subject immunized activity to meaningful state oversight?

b. Should courts rely on the elements proposed by the FTC Staff's State Action Task Force (development of adequate factual record, written decision, and specific assessment) to determine whether the ''active supervision'' prong is satisfied? Are these elements workable in practice? *See* FTC Report at 55.

c. Should courts make any other changes when interpreting and applying the ''active supervision'' prong?

3. Should courts require different degrees of ''clear articulation'' by legislators and different levels of ''active supervision'' by executive or regulatory entities depending upon the circumstances (a ''tiered approach'')?

4. Do courts in applying the state action doctrine currently account for spillover effects (anticompetitive conduct immunized by one state that has a deleterious effect on consumers in other states)? If not, should courts address spillover effects under the state action doctrine? What standards should govern that analysis?

5. How should courts apply the state action doctrine to various governmental entities?

a. Should state agencies and departments be subject to the ''active supervision'' prong of the state action doctrine? If so, who should actively supervise these state entities?

b. When should courts treat ''quasi-governmental'' entities as a private actor (subject to the ''active supervision'' prong) or as a municipality (potentially not subject to the ''active supervision'' prong)?

c. Should courts apply the ''active supervision'' prong to a municipality or state entity when it acts as a ''market participant''? If so, how should that entity's activities as a regulator be distinguished from its activities as a ''market participant''?

d. Should Congress repeal the Local Government Antitrust Act of 1984?

VI. International

1. Should the FTAIA be amended to clarify the circumstances in which the Sherman Act and FTC Act apply to extraterritorial anticompetitive conduct?

2. Are there technical or procedural steps the United States could take to facilitate further coordination with foreign antitrust enforcement authorities?

a. Are there technical amendments to the International Antitrust Enforcement Assistance Act of 1994 (''IAEAA'') that could enhance coordination between the United States and foreign antitrust enforcement authorities?

b. Are there technical changes to the budget authority granted U.S. antitrust agencies that could further facilitate the provision of international antitrust technical assistance to foreign antitrust authorities?

VII. Merger Enforcement

A. Federal Antitrust Merger Enforcement Policy Generally

1. Has current U.S. merger enforcement policy been effective in ensuring competitively operating markets without unduly hampering the ability of companies to operate efficiently and compete in global markets? Please identify specific examples, evidence, or analyses supporting your assessment.

B. Transparency in Federal Agency Merger Review

1. Several commenters in the first phase of the Commission's work advised that the Commission should address whether there is sufficient transparency in federal antitrust enforcement policy. Do the Horizontal Merger Guidelines provide informative guidance to merging parties regarding the likely antitrust treatment of their transactions, and do they appear accurately to reflect actual current FTC and DOJ enforcement practices (for example, with respect to market definition and concentration threshold presumptions of antitrust concern)? Please support your response with specific examples.

2. Should the federal antitrust enforcement agencies provide more guidance regarding their enforcement policies, including, for example, when they decide not to challenge a transaction?

C. Efficiencies in Merger Analysis

1. Do the U.S. courts and federal antitrust enforcement agencies adequately consider efficiencies in merger analysis? Please identify specific examples, evidence, or analyses supporting your assessment.

2. What types of efficiencies should be recognized in antitrust merger analysis and in what circumstances should they be considered or not considered in determining the legality of a merger? How should courts and agencies evaluate claims of efficiencies? What should be the burdens of production and proof for establishing efficiencies?

3. What is the appropriate welfare standard to use in assessing efficiencies—a consumer welfare standard, a total welfare standard, or some alternative standard?

D. The Hart-Scott-Rodino Pre-Merger Review Process

1. Several commenters in the first phase of the Commission's work advised that the Commission should study the burden involved in responding to HSR ''Second Request'' merger investigations. The Commission invites companies and/or their counsel who have experienced Second Request investigations to comment on the burden involved, providing specific information on costs by type (*e.g.,* attorneys' fees, economist and other expert fees, document and electronic information production costs, employee time, and costs associated with delay of closing) and length of the investigation.

2. Should changes be made to the HSR pre-merger notification system, *e.g.,* with respect to HSR reporting thresholds or the information required to be included in the initial filing?

3. Should any changes be made to the HSR ''Second Request'' process currently used by the FTC and DOJ? Please address both the possibility of broad systemic change and of more limited changes within the existing system, being as specific as possible and considering, for example (and without limitation): (i) Whether the U.S. should adopt processes similar to those used by other jurisdictions, such as those employed by the European Union (*e.g.,* the Form CO) or Canada (*e.g.,* long and short-form reporting); (ii) the extent to which various types of information sought in a typical Second Request contribute to merger assessment; (iii) whether and how the burden associated with documents and data requests could be reduced without materially impeding the federal agencies' ability to execute their enforcement responsibilities; (iv) how merging companies can expedite the HSR process.

VIII. New Economy

A. Antitrust Analysis of Industries in Which Innovation, Intellectual Property, and Technological Change are Central Features

1. Does antitrust doctrine focus on static analysis, and does this affect its application to dynamic industries?

2. What features, if any, of dynamic, innovation-driven industries pose distinctive problems for antitrust analysis, and what impact, if any, should those features have on the application of antitrust analysis to these industries?

3. Are different standards or benchmarks for market definition or market power appropriate when addressing dynamic, innovation-driven industries, for example, to reflect the fact that firms in such industries may depend on the opportunity to set prices above marginal costs to earn returns? Or, are existing antitrust principles sufficiently flexible to accommodate the facts relevant to dynamic industries?

B. Specific Issues at the Interface of Intellectual Property, Innovation, and Antitrust

1. Should there be a presumption of market power in tying cases when there is a patent or copyright? What significance should be attached to the existence of a patent or copyright in assessing market power in tying cases and in other contexts?

2. In what circumstances, if any, should the two-year time horizon used in the Horizontal Merger Guidelines to assess the timeliness of entry be adjusted? For example, should the time period be lengthened to include newly developed products when the introduction of those products is likely to erode market power? Should it matter if the newly developed products will not erode market power within two years? Is there a length of time for which the possession of market power should not be viewed as raising antitrust concerns?

3. Should antitrust law be concerned with ''innovation markets''? If so, how should antitrust enforcers analyze innovation markets? How often are ''innovation markets'' analyzed in antitrust enforcement?

C. Examination of the Reports on the Patent System by the National Academies Board on Science, Technology, and Economic Policy and the Federal Trade Commission

The National Academies Board on Science, Technology, and Economic Policy and the Federal Trade Commission have both recently

conducted extensive studies of patent-related activity and the operation of the patent system, and issued reports including recommendations for reform. *See* Stephen A. Merrill, Richard C. Levin & Mark B. Myers, A Patent System for the 21st Century (2004); Federal Trade Commission, To Promote Innovation: The Proper Balance of Competition and Patent Law and Policy (Oct. 2003).

1. Do the reports fully capture the role of patents and developments in patent-related activity (*e.g.,* applications, grants, licensing, and litigation) over the past 25 years?

2. Are the concerns or problems regarding the operation of the patent system identified in the two reports well-founded?

3. Which, if any, of the recommendations for changes to the patent system made in those two reports should be adopted?

4. Are there other issues regarding the operation of the patent system not addressed in either report that should be considered by the Antitrust Modernization Commission? Please be specific in identifying any issue and the reasons for its importance.

IX. Regulated Industries

1. What role, if any, should antitrust enforcement play in regulated industries, particularly industries in transition to deregulation? How should authority be allocated between antitrust enforcers and regulatory agencies to best promote consumer welfare in regulated industries?

2. How, if at all, should antitrust enforcement take into account regulatory systems affecting important competitive aspects of an industry? How, if at all, should regulatory agencies take into account the availability of antitrust remedies?

3. What is the appropriate standard for determining the extent to which the antitrust laws apply to regulated industries where the regulatory structure contains no specific antitrust exemption? For example, in what circumstances should antitrust immunity be implied as a result of a regulatory structure?

4. How should courts treat antitrust claims where the relevant conduct is subject to regulation, but the regulatory legislation contains a ''savings clause'' providing that the antitrust laws continue to apply to the conduct?

5. Should Congress and regulatory agencies set industry-specific standards for particular antitrust violations that may conflict with general standards for the same violations?

6. When a merger or acquisition involves one or more firms in a regulated industry, how should authority for merger review be allocated between the antitrust agencies (DOJ and FTC) and the relevant regulatory agency?

a. Are there additional costs and delay when two agencies (one antitrust, one regulatory) both analyze the antitrust effects of the same merger? Are there benefits to such dual review?

b. Should regulatory agencies defer to antitrust analysis by the antitrust agencies, or should both the antitrust and regulatory agencies conduct separate antitrust analyses in performing merger reviews? Should the antitrust agencies have primary responsibility or simply an advisory role with respect to antitrust analysis in merger review?

In your response, please refer specifically to the following contexts:

i. Mergers or acquisitions involving financial institutions. *See* 12 U.S.C. 1467a, 1828, 1842.

ii. Mergers or acquisitions involving certain media companies (*e.g.,* radio or television broadcasters, satellite, and cable companies) and common carriers. *See* 47 U.S.C. 214, 310.

iii. Mergers or acquisitions of rail carriers subject to approval by the Surface Transportation Board. *See* 49 U.S.C. 11321, 11323–24.

iv. Mergers or acquisitions involving motor carriers of passengers. *See* 49 U.S.C. 14303.

v. Pooling agreements among certain motor carriers. *See* 49 U.S.C. 14302.

vi. Certain agreements involving domestic and foreign airlines. *See* 49 U.S.C. 41308–09. vii. Acquisitions of assets of natural gas companies. *See* 15 U.S.C. 717f.

viii. Mergers or acquisitions of electric power companies. *See* 16 U.S.C. 824b.

ix. License applications subject to the approval of the U.S. Nuclear Regulatory Commission. *See* 42 U.S.C. 2135.

x. Issuance of federal coal leases. *See* 30 U.S.C. 184(l).

xi. Issuance or transfer of licenses for exploration of hard minerals in deep seabed sites. *See* 30 U.S.C. 1413(d).

xii. Issuance of oil and gas leases on submerged lands of the Outer Continental Shelf. *See* 43 U.S.C. 1337(c).

Dated: May 16, 2005.

By direction of the Antitrust Modernization Commission.

Andrew J. Heimert,

Executive Director & General Counsel, Antitrust Modernization Commission.

[FR Doc. 05–10025 Filed 5–18–05; 8:45 am]

BILLING CODE 6820–YM–P

DEPARTMENT OF COMMERCE

National Institute of Standards and Technology

[Docket No. 040602169–5002–02]

Announcing Approval of the Withdrawal of Federal Information Processing Standard (FIPS) 46–3, Data Encryption Standard (DES); FIPS 74, Guidelines for Implementing and Using the NBS Data Encryption Standard; and FIPS 81, DES Modes of Operation

AGENCY: National Institute of Standards and Technology (NIST), Commerce.

ACTION: Notice.

SUMMARY: The Secretary of Commerce has approved the withdrawal of FIPS 46–3, Data Encryption Standard (DES); FIPS 74, Guidelines for Implementing and Using the NBS Data Encryption Standard; and FIPS 81, DES Modes of Operation. These FIPS are withdrawn because FIPS 46–3, DES, no longer provides the security that is needed to protect Federal government information. FIPS 74 and 81 are associated standards that provide for the implementation and operation of the DES. Federal government organizations are now encouraged to use FIPS 197, Advanced Encryption Standard (AES), which was approved for Federal government use in November 2001. FIPS 197 specifies a faster and stronger algorithm than the DES for encryption. For some applications, Federal government departments and agencies may use the Triple Data Encryption Algorithm to provide cryptographic protection for their information. This algorithm and its uses have been specified in NIST Special Publication 800–67, Recommendations for the Triple Data Encryption Algorithm (TDEA) Block Cipher, issued in May 2004. FIPS 197 and SP 800–67 are available on NIST's Web pages. The content of these withdrawn standards will remain available at *http://csrc.nist.gov/publications/fips/index.html* as reference documents and these three FIPS will be listed as withdrawn, rather than current FIPS.

DATES: These standards are withdrawn as of May 19, 2005.

FOR FURTHER INFORMATION CONTACT: Mr. William Barker (301) 975–8443, *wbarker@nist.gov,* National Institute of Standards and Technology, 100 Bureau Drive, STOP 8930, Gaithersburg, MD 20899–8930.

SUPPLEMENTARY INFORMATION: In July 2004, a notice was published in the **Federal Register** proposing the withdrawal of FIPS 46–3, DES; FIPS 74,

Guidelines for Implementing and Using the NBS Data Encryption Standard; and FIPS 81, DES Modes of Operation. The **Federal Register** notice solicited comments from the public, academic and research communities, manufacturers, voluntary standards organizations, and Federal, state, and local government organizations. In addition to being published in the **Federal Register**, the notice was posted on the NIST Web site.

Comments and questions were received from thirteen private sector organizations or individuals, and two federal government organizations. Seven of the submitted comments supported the withdrawal of the DES. Five comments recognized the inadequacy of the DES and did not oppose the withdrawal, but raised transition issues or suggested that NIST keep the specifications available for private sector organizations that wish to use them or make provisions for continued use of the DES. One industry organization and two individuals opposed the withdrawal of the DES, citing the large investments made in DES technology by their organizations and others.

Following is an analysis of the comments dealing with technical and transition issues.

Comment: NIST should consider allowing the continued use of DES implementations that only decrypt data, enabling agencies to recover the data that they have already encrypted using the DES.

Response: NIST guidance contained in draft Special Publication 800–57, Recommendation for Key Management, Part 1 General Guideline, covers this situation. SP 800–57 expands on guidance issued in Special Publication 800–21, Guideline for Implementing Cryptography in the Federal Government, and recommends that agencies re-encrypt information that had been encrypted using an algorithm and key size that no longer provide adequate protection. Thus, Federal government information that has been encrypted with the DES should be re-encrypted using a FIPS-approved algorithm and an appropriate key size that agencies determine will provide adequate security for the information for the remainder of its life.

Comment: NIST should note certain limits that might be reached when using two-key Triple DES. The recommended safe default when using two-key Triple-DES is to re-key before encrypting 2^{40} blocks.

Response: These specific applications and requirements are outside the scope of the recommended action to withdraw FIPS 46–3 and two associated standards.

Comment: NIST should retain the availability of the technique in FIPS 74 that specifies the encryption of numeric data into numeric data. This technique is used to protect customer data that a bank might share with a telemarketing firm.

Response: NIST will place FIPS 74, Guidelines for Implementing and Using the NBS Data Encryption Standard, on NIST's Web page at *http://www.itl.nist.gov/fipspubs/* under Withdrawn FIPS. The standard will be marked as inadequate for the protection of Federal government information.

Comment: NIST should provide a timetable and a transition strategy for the discontinuation of the use of DES implementations. NIST should clarify the transition from the use of applied and embedded DES products.

Response: A proposed transition strategy for validating algorithms and cryptographic modules has been posted for public comment on NIST's Web page at *http://csrc.nist.gov/cryptval/* under ''Notices.'' The transition plan addresses the use by Federal agencies of DES implementations, which are incorporated in cryptographic modules, and which have been validated under the Cryptographic Module Validation Program. The transition plan allows Federal agencies and vendors to make a smooth transition to stronger cryptographic algorithms such as AES or Triple-DES.

Comment: The DES should be retained because it is widely used in the market.

Response: NIST believes that the DES no longer provides adequate protection for Federal government information, and therefore recommends withdrawal of FIPS 46–3 and associated standards. When FIPS 46–3 was reaffirmed in 1999, the standard stated that NIST could no longer support the use of single DES for many applications, and that agencies with legacy single DES systems should start the transition to Triple DES. The specifications for the standards that have been withdrawn will be placed on NIST's Web page at *http://www.itl.nist.gov/fipspubs/* under Withdrawn FIPS. All of the withdrawn standards will be marked as inadequate for the protection of Federal government information, but will be available to private sector organizations that wish to use them.

Comment: FIPS 46–3 and associated standards are used in the commercial world and serve important functions, including use by the entertainment industry for real-time broadcast security, to prevent unrestricted copying of files, and for the security of digital television signals. The standards should be reaffirmed for use by non-government organizations or made available in electronic form to non-government organizations that wish to use them.

Response: The specifications for FIPS 46–3 (DES) and the associated standards will be placed on NIST's Web page at *http://www.itl.nist.gov/fipspubs/* under Withdrawn FIPS. All of the withdrawn standards will be marked as inadequate for the protection of Federal government information, but will be available to private sector organizations that wish to use them.

Comment: NIST should issue the Triple-DES as a FIPS and encourage implementers to use both the TDES and the Advanced Encryption Standard in their products.

Response: Although both AES and three-key TDES are considered adequate for the protection of Federal government information for many years, TDES is less efficient and is slightly less secure than AES. In order to encourage the use of AES over TDES, AES has been published as a Standard (FIPS 197), whereas TDES was published as a NIST Recommendation (Special Publication 800–67).

Therefore, as of the date of this **Federal Register** notice, FIPS 46–3, Data Encryption Standard is withdrawn as it no longer provides the security that is needed to protect Federal government information. FIPS 74, Guidelines for Implementing and Using the NBS Encryption Standard and FIPS 81, DES Modes of Operation, are also withdrawn, as they are associated standards that provide for the implementation and operation of the DES.

Authority: Federal Information Processing Standards Publications (FIPS PUBS) are issued by the National Institute of Standards and Technology after approval by the Secretary of Commerce pursuant to Section 5131 of the Information Technology Management Reform Act of 1996 and the Federal Information Security Management Act of 2002, Public Law 107–347.

E.O. 12866: This notice has been determined to be significant for the purposes of E. O. 12866.

Dated: May 12, 2005.

Hratch G. Semerjian,

Acting Director, NIST.

[FR Doc. 05–9945 Filed 5–18–05; 8:45 am]

BILLING CODE 3510–CN–P

DEPARTMENT OF COMMERCE

National Institute of Standards and Technology

[Docket No.: 050314070–5070–01]

Request for Technical Input—Standards in Trade Workshops

AGENCY: National Institute of Standards and Technology.

ACTION: Request for workshop recommendations.

SUMMARY: The National Institute of Standards and Technology (NIST) invites interested parties to submit recommendations for workshops covering specific sectors and targeted countries or regions of the world where training in the U.S. system of standards development, conformity assessment, and metrology may facilitate trade. Prospective workshops may be scheduled for one or two week periods. This notice is not an invitation for proposals to fund grants, contracts or cooperative agreements of any kind. NIST will offer a limited number of workshops, based upon the availability of resources. Recommenders are encouraged to consider departmental priorities outlined in part of the soon-to-be released National Export Strategy. NIST will consider recommendations based upon which workshops would be most useful to intended audiences. Additional information about the NIST Standards in Trade Workshops is available at *http://ts.nist.gov/ts/htdocs/210/gsig/sitdescr.htm.*

DATES: All recommendations must be submitted no later than 5 p.m., June 3, 2005.

ADDRESSES: All recommendations must be submitted to Elisabeth Gomez via email (*elisabeth.gomez@nist.gov*) or by mail to 100 Bureau Drive, Stop 2100, Gaithersburg, MD, 20899. The National Export Strategy is available at *http://www.ita.doc.gov/media/publications/.* Additional information about the NIST Standards in Trade Workshops, to include schedules and summary reports for workshops held to date and participant information, is available at *http://ts.nist.gov/ts/htdocs/210/gsig/sitdescr.htm.*

FOR FURTHER INFORMATION CONTACT: Elisabeth Gomez (301) 975–3089, *elisabeth.gomez@nist.gov.*

SUPPLEMENTARY INFORMATION: The Standards in Trade Workshops are a major activity of the Global Standards and Information Group in the NIST Standards Services Division (SSD). The workshops are designed to provide timely information to foreign standards officials on U.S. practices in standards and conformity assessment. Participants are introduced to U.S. technology and principles in metrology, standards development and application, and conformity assessment systems.

Each workshop is a one or two week program offering an overview of the roles of the U.S. Government, private sector, and regional and international organizations engaged in standards development and conformity assessment practices. Specific workshop objectives are to: (1) Familiarize participants with U.S. technology and practices in metrology, standardization, and conformity assessment; (2) describe and understand the roles of the U.S. Government and the private sector in developing and implementing standards; and (3) develop professional contacts as a basis for strengthening technical ties and enhancing trade.

Workshop recommendations (maximum 5 pages) must address at a minimum the following points, *in the order noted and labeled accordingly:*

1. Name and Description of the Recommending Organization

Provide the primary mailing address and a brief description of the organization, including the name, telephone number and email address of the primary point of contact.

2. Industry Sector and Suggested Workshop Title

Provide a description of the suggested industrial sector and focus area with a possible workshop title which captures the essence of the recommendation. Consider the goals and potential benefits.

3. Proposed Workshop Objectives

Describe the intended goals to be attained and why they are important and list the specific possible workshop objectives.

4. Calendar Dates Suggested for Workshop

Provide three or more suggested start dates for the workshop. The first date should be no earlier than 8 months from the publication date of this announcement.

5. Relevant NIST Organizational Link

Workshop topics must be linked to NIST activities and/or research. The appropriate NIST organizational unit, laboratory or program must be identified by the recommender and the relevance of the activity to NIST must be demonstrated. If known, identify the specific NIST staff who could serve as the NIST internal point of contact.

6. Proposed Foreign Participants

Provide a representative list of the foreign organizations that might participate in the workshop, including a description of their function or business and their country of incorporation or origin.

7. U.S. Stakeholder Participants (e.g., Associations, Agencies, Users, others)

Provide a representative list of other U.S.-based organizations that are likely to participate in the workshop.

8. Principal Topics

Provide a list of the suggested topics for the workshop.

9. Related Site Visits and Events

Workshops can include visits to relevant business sites or events. Provide a list of suggested site visit locations, events or other areas of interest and discuss the relevance of each to the overall purpose of the proposed workshop's goals.

10. Expected Outcomes/Measures of Success

Include in this section a description of:

a. The anticipated benefit of the workshop for trade and market access;

b. The anticipated economic impacts (in dollars);

c. The potential for future opportunities for trade as a result of the workshop;

d. The measures of success;

e. The desired results of the workshop and how the results will be measured.

All recommendations must address each of the above ten points and be submitted to Elisabeth Gomez via email (*elisabeth.gomez@nist.gov*) or mail 100 Bureau Drive, Stop 2100, Gaithersburg, MD 20899 no later than 5 p.m., June 3, 2005.

Dated: May 12, 2005.

Hratch G. Semerjian,

Acting Director.

[FR Doc. 05–9946 Filed 5–18–05; 8:45 am]

BILLING CODE 3510–13–P

DEPARTMENT OF COMMERCE

National Oceanic and Atmospheric Administration

[I.D. 050605B]

Marine Mammals; File Nos. 116–1786, 715–1792, 978–1791

AGENCY: National Marine Fisheries Service (NMFS), National Oceanic and Atmospheric Administration (NOAA), Commerce.

ACTION: Receipt of applications for permits.

SUMMARY: Notice is hereby given that three applicants have applied in due form for a permit for scientific research on marine mammals.

DATES: Written, telefaxed, or e-mail comments on the new applications must be received on or before June 20, 2005.

ADDRESSES: The applications and related documents are available for review upon written request or by appointment (See **SUPPLEMENTARY INFORMATION**).

Written comments or requests for a public hearing on these applications should be mailed to the Chief, Permits, Conservation and Education Division, F/PR1, Office of Protected Resources, NMFS, 1315 East-West Highway, Room 13705, Silver Spring, MD 20910. Those individuals requesting a hearing should set forth the specific reasons why a hearing on the particular request would be appropriate. Comments may also be submitted by facsimile at (301)427–2521, provided the facsimile is confirmed by hard copy submitted by mail and postmarked no later than the closing date of the comment period.

Comments may also be submitted by e-mail. The mailbox address for providing email comments is *NMFS.Pr1Comments@noaa.gov*. Include in the subject line of the e-mail comment the following document identifier: File No. 116–1786, 715–1792, or 978–1791.

FOR FURTHER INFORMATION CONTACT: Amy Sloan or Tammy Adams, 301/713–2289.

SUPPLEMENTARY INFORMATION: The subject permits are requested under the authority of the Marine Mammal Protection Act of 1972, as amended (MMPA; 16 U.S.C. 1361 *et seq.*), the Regulations Governing the Taking and Importing of Marine Mammals (50 CFR part 216), the Endangered Species Act of 1973, as amended (ESA; 16 U.S.C. 1531 *et seq.*), the regulations governing the taking, importing, and exporting of endangered and threatened species (50 CFR 222–227), and the Fur Seal Act of 1966, as amended (16 U.S.C. 1151 *et seq.*).

Applications for Permits

File No. 116–1786: Sea World, Inc., 7007 Sea World Dr., Orlando, Florida 32821 (Principal Investigator: Dudley Wigdahl) proposes to continue the long-term maintenance of eight non-releasable female Hawaiian monk seals (*Monachus schauinslandi*) at Sea World San Antonio. Proposed enhancement activities include increased public awareness through an education program that includes public educational exhibit lectures, public display of the seals with graphic panels around the monk seal exhibit, and collection of husbandry samples, which would provide information on the biology of the species. Animals would have the following husbandry procedures performed for health monitoring purposes: weight measurements taken, blood sampling, fecal and urine sampling, and medical cultures taken. No research is proposed at this time. The applicant has requested a 5-year permit.

File No. 715–1792: Andrew W. Trites, Ph.D., Marine Mammal Research Unit, Fisheries Centre, University of British Columbia, Room 18, Hut B–3, 6248 Biological Sciences Road, Vancouver, B.C. Canada V6T 1Z4 requests a permit to conduct research on northern fur seals (*Callorhinus ursinus*) in Alaska. The proposed project involves the deployment of three types of electronic tags on up to 35 adult female northern fur seals from St. Paul Island, Alaska over a 3–year period to gather fine scale foraging data needed to identify critical habitat and assess the extent of spatial overlap with commercial fisheries. Data gathered from the simultaneous deployment of all three devices will also be used to develop analytical procedures to enhance the interpretation of existing foraging data. The applicant has requested a 3–year permit.

File No. 978–1791: Paul E. Nachtigall, Ph.D., Marine Mammal Research Program Hawaii Institute of Marine Biology, P.O. Box 1106, Kailua, Hawaii 96734, seeks a permit to conduct hearing measurements on stranded whales and dolphins that are under veterinary care in a rehabilitation center. Results of this work would shed insight into the nature of strandings that may be caused by man-made sounds. These results could also be used as a medical diagnostic tool to determine how well an individual animal can hear and thus help with decisions made about the potential for a stranded animal to be released and its survival in the wild. The applicant would use auditory brainstem response recordings with non-invasive suction cup sensors on up to 15 individuals of certain species of cetaceans in the U.S. These types of recordings are routinely used to measure the hearing of human infants within the first weeks of life, do not represent a risk to whales and dolphins, and would expand knowledge about cetacean hearing to assist in the conservation of these species. The applicant has requested a 5–year permit.

Concurrent with the publication of this notice in the **Federal Register**, NMFS is forwarding copies of these applications to the Marine Mammal Commission and its Committee of Scientific Advisors.

The applications and related documents are available for review upon written request or by appointment in the following locations:

All documents: Permits, Conservation and Education Division, Office of Protected Resources, NMFS, 1315 East-West Highway, Room 13705, Silver Spring, MD 20910; phone (301)713–2289; fax (301)427–2521;

File No. 715–1792: Alaska Region, NMFS, P.O. Box 21668, Juneau, AK 99802–1668; phone (907)586–7221; fax (907)586–7249;

File No. 978–1791: Pacific Islands Region, NMFS, 1601 Kapiolani Blvd., Rm 1110, Honolulu, HI 96814–4700; phone (808)973–2935; fax (808)973–2941; and

File No. 116–1786: Southeast Region, NMFS, 9721 Executive Center Drive North, St. Petersburg, FL 33702–2432; phone (727)570–5301; fax (727)570–5320.

Dated: May 12, 2005.

Stephen L. Leathery,

Chief, Permits, Conservation and Education Division, Office of Protected Resources, National Marine Fisheries Service.

[FR Doc. 05–10022 Filed 5–18–05; 8:45 am]

BILLING CODE 3510–22–S

DEPARTMENT OF COMMERCE

National Oceanic and Atmospheric Administration

[I.D. 051605A]

Marine Mammals; File No. 881–1758

AGENCY: National Marine Fisheries Service (NMFS), National Oceanic and Atmospheric Administration (NOAA), Commerce.

ACTION: Issuance of permit.

SUMMARY: Notice is hereby given that Alaska SeaLife Center (ASLC), 301 Railway Avenue, Seward, AK 99664, (Anne Hoover-Miller, Principal Investigator) has been issued a permit to conduct research on harbor seals (*Phoca vitulina*) in rehabilitation at the ASLC.

ADDRESSES: The permit and related documents are available for review upon written request or by appointment in the following office(s):

Permits, Conservation and Education Division, Office of Protected Resources, NMFS, 1315 East-West Highway, Room 13705, Silver Spring, MD 20910; phone (301)713–2289; fax (301)713–0376; and

Alaska Region, NMFS, P.O. Box 21668, Juneau, AK 99802–1668; phone (907)586–7221; fax (907)586–7249.

FOR FURTHER INFORMATION CONTACT: Amy Sloan or Ruth Johnson, (301)713–2289.

SUPPLEMENTARY INFORMATION: On December 29, 2004, notice was published in the **Federal Register** (69 FR 77997) that a request for a scientific research permit to take the species identified above had been submitted by the above-named organization. The requested permit has been issued under the authority of the Marine Mammal Protection Act of 1972, as amended (16 U.S.C. 1361 *et seq.*), and the Regulations Governing the Taking and Importing of Marine Mammals (50 CFR part 216).

This permit authorizes researchers to study growth, development, and health of harbor seals throughout their residency in the ASLC Rehabilitation Program. In addition to conducting standard rehabilitation practices, researchers will collect blood, fecal, and urine samples; collect body composition measurements using bioelectrical impedance and deuterium oxide; perform sodium bromide, Evan's blue dye, and nitrogen administration followed by post-administration blood samples; conduct assimilation efficiency experiments to study metabolic development; and collect blubber biopsies to study fatty acid composition and contaminant loads. The permit has been issued for a five-year period.

Dated: May 16, 2005.

Stephen L. Leathery,

Chief, Permits, Conservation and Education Division, Office of Protected Resources, National Marine Fisheries Service.

[FR Doc. 05–10024 Filed 5–18–05; 8:45 am]

BILLING CODE 3510–22–S

DEPARTMENT OF DEFENSE

Office of the Secretary

[Transmittal No. 05–18]

36(b)(1) Arms Sales Notification

AGENCY: Department of Defense, Defense Security Cooperation Agency.

ACTION: Notice.

SUMMARY: The Department of Defense is publishing the unclassified text of a section 36(b)(1) arms sales notification. This is published to fulfill the requirements of section 155 of Public Law 104–164 dated 21 July 1996.

FOR FURTHER INFORMATION CONTACT: Ms. J. Hurd, DSCA/OPS–ADMIN, (703) 604–6575.

The following is a copy of a letter to the Speaker of the House of Representatives, Transmittal 05–18 with attached transmittal, policy justification, and Sensitivity of Technology.

Dated: May 13, 2005.

L.M. Bynum,

Alternate OSD Federal Register Liaison Officer, Department of Defense.

BILLING CODE 5001–06–M

DEFENSE SECURITY COOPERATION AGENCY

WASHINGTON, DC 20301-2800

6 MAY 2005
In reply refer to:
I-05/002601

The Honorable J. Dennis Hastert
Speaker of the House of Representatives
Washington, D.C. 20515-6501

Dear Mr. Speaker:

Pursuant to the reporting requirements of Section 36(b)(1) of the Arms Export Control Act, as amended, we are forwarding herewith Transmittal No. 05-18, concerning the Department of the Navy's proposed Letter(s) of Offer and Acceptance to Pakistan for defense articles and services estimated to cost $180 million. Soon after this letter is delivered to your office, we plan to notify the news media.

Sincerely,

JEFFREY B. KOHLER
LIEUTENANT GENERAL, USAF
DIRECTOR

Enclosures:
1. **Transmittal**
2. **Policy Justification**
3. **Sensitivity of Technology**

Same ltr to: **House Committee on International Relations**
Senate Committee on Foreign Relations
House Committee on Armed Services
Senate Committee on Armed Services
House Committee on Appropriations
Senate Committee on Appropriations

Transmittal No. 05-18

Notice of Proposed Issuance of Letter of Offer
Pursuant to Section 36(b)(1)
of the Arms Export Control Act, as amended

(i) **Prospective Purchaser:** Pakistan

(ii) **Total Estimated Value:**

Major Defense Equipment*	$115 million
Other	$ 65 million
TOTAL	$180 million

(iii) **Description and Quantity or Quantities of Articles or Services under Consideration for Purchase:** 40 AGM-84L (air-launched) and 20 RGM-84L (surface-launched) Grade B Canister HARPOON Block II missiles; containers; missile modifications; training devices; spare and repair parts; technical support; support equipment; personnel training and training equipment; technical data and publications; U.S. Government and contractor engineering and logistics support services; and other related elements of logistics support.

(iv) **Military Department:** Navy (ACZ)

(v) **Prior Related Cases, if any:**

FMS case ACK	- $24 million	- 24Apr90
FMS case ABO	- $38 million	- 30Sep85
FMS case ABD	- $45 million	- 18Oct83

(vi) **Sales Commission, Fee, etc., Paid, Offered, or Agreed to be Paid:** none

(vii) **Sensitivity of Technology Contained in the Defense Article or Defense Services Proposed to be Sold:** See Annex attached

(viii) **Date Report Delivered to Congress:** 6 May 2005

* as defined in Section 47(6) of the Arms Export Control Act.

POLICY JUSTIFICATION

Pakistan – HARPOON Block II Missiles

The Government of Pakistan has requested a possible sale of 40 AGM-84L (air-launched) and 20 RGM-84L (surface-launched) Grade B Canister HARPOON Block II missiles; containers; missile modifications; training devices; spare and repair parts; technical support; support equipment; personnel training and training equipment; technical data and publications; U.S. Government and contractor engineering and logistics support services; and other related elements of logistics support. The estimated cost is $180 million.

This proposed sale will contribute to the foreign policy and national security of the United States by helping to improve the security of a friendly country that continues to be a key ally in the global war on terrorism.

Pakistan intends to use the purchase to upgrade and modernize its existing HARPOON missile capability. The Pakistan Navy currently has AGM-84 Block I air/surface/subsurface launch capability. The modernization will enhance Pakistan's legitimate self-defense capability. The AGM-84, HARPOON Block II upgraded targeting capability significantly reduces the risk of hitting non-combatant targets thus improving Pakistan's naval operational flexibility. Pakistan will have no difficulty absorbing these additional missiles into its armed forces.

The proposed sale of this equipment and support will not affect the basic military balance in the region.

The principal contractors will be: The Boeing Company of St. Louis, Missouri and Delex Systems, Incorporated, of Vienna, Virginia. There are no known offset agreements proposed in connection with this potential sale.

Implementation of this proposed sale will not require the assignment of any additional U.S. Government or contractor representatives to Pakistan permanently. There may be U.S. Government or contractor personnel in-country on a temporary basis in conjunction with program technical and management oversight and support requirements.

There will be no adverse impact on U.S. defense readiness as a result of this proposed sale.

Transmittal No. 05-18

Notice of Proposed Issuance of Letter of Offer Pursuant to Section 36(b)(1) of the Arms Export Control Act

Annex
Item No. vii

(vii) Sensitivity of Technology:

1. The AGM-84L and RGM-84L (A/RGM-84L) HARPOON missile is an Anti-Surface Warfare (ASuW) missile in air- and ship-launched versions that provides naval forces with a capability to engage targets in both the "blue water" regions and the littorals of the world. The highest classification of any data and/or items associated with this proposed sales of A/RGM-84L missiles, including publications, documentation, operations, supply, maintenance, and training is Secret.

2. The A/RGM-84L incorporates components, software, and technical design information that are considered sensitive. The following HARPOON components being conveyed by the proposed sale that are considered sensitive and are classified Confidential include:

a. Radar seeker
b. Global Positioning System/Inertial Navigation System (GPS/INS)
c. Operational Flight Program (OFP) software
d. Missile operational characteristics and performance data

These elements are essential to the ability of the HARPOON missile to selectively engage hostile targets under a wide range of operational, tactical, and environmental conditions.

3. If a technologically advanced adversary were to obtain knowledge of the specific hardware and software elements, the information could be used to develop countermeasures which might reduce weapon system effectiveness or be used in the development of a system with similar or advanced capabilities.

[FR Doc. 05–9955 Filed 5–18–05; 8:45 am]
BILLING CODE 5001–06–C

DEPARTMENT OF DEFENSE

Office of the Secretary

[Transmittal No. 05–19]

36(b)(1) Arms Sales Notification

AGENCY: Department of Defense, Defense Security Cooperation Agency.

ACTION: Notice.

SUMMARY: The Department of Defense is publishing the unclassified text of a section 36(b)(1) arms sales notification. This is published to fulfill the requirements of section 155 of Public Law 104–164 dated 21 July 1996.

FOR FURTHER INFORMATION CONTACT: Ms. J. Hurd, DSCA/OPS–ADMIN, (703) 604–6575.

The following is a copy of a letter to the Speaker of the House of

Representatives, Transmittal 05–19 with attached transmittal, policy justification, and Sensitivity of Technology.

Dated: May 13, 2005.

L.M. Bynum,

Alternate OSD Federal Register Liaison Officer, Department of Defense.

BILLING CODE 5001–06–M

DEFENSE SECURITY COOPERATION AGENCY

WASHINGTON, DC 20301-2800

6 MAY 2005
In reply refer to:
I-05/002603

The Honorable J. Dennis Hastert
Speaker of the House of Representatives
Washington, D.C. 20515-6501

Dear Mr. Speaker:

Pursuant to the reporting requirements of Section 36(b)(1) of the Arms Export Control Act, as amended, we are forwarding herewith Transmittal No. 05-19, concerning the Department of the Navy's proposed Letter(s) of Offer and Acceptance to Pakistan for defense articles and services estimated to cost $46 million. Soon after this letter is delivered to your office, we plan to notify the news media.

Sincerely,

JEFFREY B. KOHLER
LIEUTENANT GENERAL, USAF
DIRECTOR

Enclosures:
1. **Transmittal**
2. **Policy Justification**
3. **Sensitivity of Technology**

Same ltr to: **House Committee on International Relations**
Senate Committee on Foreign Relations
House Committee on Armed Services
Senate Committee on Armed Services
House Committee on Appropriations
Senate Committee on Appropriations

Transmittal No. 05-19

Notice of Proposed Issuance of Letter of Offer
Pursuant to Section 36(b)(1)
of the Arms Export Control Act, as amended

(i) **Prospective Purchaser:** Pakistan

(ii) **Total Estimated Value:**

Major Defense Equipment*	$37 million
Other	$ 9 million
TOTAL	$46 million

(iii) **Description and Quantity or Quantities of Articles or Services under Consideration for Purchase:** 300 AIM-9M-1/2 SIDEWINDER air-to-air missiles, missile containers, test sets and support equipment, spare and repair parts, publications and technical documentation, personnel training and training equipment, U.S. Government and contractor engineering and logistics support services, and other related elements of logistics support.

(iv) **Military Department:** Navy (ACW)

(v) **Prior Related Cases, if any:**
FMS case ACC - $ 26 million - 29Sep88
FMS case ABU - $34 million - 24May85

(vi) **Sales Commission, Fee, etc., Paid, Offered, or Agreed to be Paid:** none

(vii) **Sensitivity of Technology Contained in the Defense Article or Defense Services Proposed to be Sold:** See Annex attached

(viii) **Date Report Delivered to Congress:** 6 MAY 2005

* as defined in Section 47(6) of the Arms Export Control Act.

POLICY JUSTIFICATION

Pakistan – AIM-9M-1/2 SIDEWINDER Missiles

The Government of Pakistan has requested a possible sale of 300 AIM-9M-1/2 SIDEWINDER air-to-air missiles, missile containers, test sets and support equipment, spare and repair parts, publications and technical documentation, personnel training and training equipment, U.S. Government and contractor engineering and logistics support services, and other related elements of logistics support. The estimated cost is $46 million.

This proposed sale will contribute to the foreign policy and national security of the United States by helping to improve the security of a friendly country that continues to be a key ally in the global war on terrorism. This system will provide Pakistan Air Force the ability to fly with armed surveillance aircraft during missions along its western border. The Pakistan Air Force currently lacks this self-defense capability. These missiles are needed to allow Pakistan to defend its borders, participate in coalition operations and exercises and operate a modern Air Force.

Pakistan will replace its existing AIM-9L missiles and maintain its current air-to-air intercept capability. Pakistan, which already has AIM-9 missiles in its inventory, will have no difficulty absorbing these additional missiles.

The proposed sale of this equipment and support will not affect the basic military balance in the region.

The prime contractor will be Raytheon Systems Corporation in Tucson, Arizona. There are no known offset agreements proposed in connection with this potential sale.

Implementation of this proposed sale will require temporary assignment for two-week intervals twice annually to participate in training, program management and technical review.

There will be no adverse impact on U.S. defense readiness as a result of this proposed sale.

Transmittal No. 05-19

Notice of Proposed Issuance of Letter of Offer Pursuant to Section 36(b)(1) of the Arms Export Control Act

Annex Item No. vii

(vii) Sensitivity of Technology:

1. The external view of the AIM-9M-1/2 Sidewinder missile is Unclassified and not sensitive. Advanced technology included in the missile: Active Optical Target Detector, Gyro Optics Assembly within the Guidance Control Section, Infrared Countermeasures, Detection and Rejection Circuitry, and a reduced smoke rocket motor. The equipment/hardware, software, and maintenance are classified Confidential. Pilot training is classified Secret. Manuals and technical documents are classified Secret. Performance and operating information is classified Secret.

2. If a technologically advanced adversary were to obtain knowledge of the specific hardware and software elements, the information could be used to develop countermeasures which might reduce weapon system effectiveness or be used in the development of a system with similar or advanced capabilities.

[FR Doc. 05–9956 Filed 5–18–05; 8:45 am]
BILLING CODE 5001–06–C

DEPARTMENT OF DEFENSE

GENERAL SERVICES ADMINISTRATION

NATIONAL AERONAUTICS AND SPACE ADMINISTRATION

[OMB Control No. 9000–0057]

Federal Acquisition Regulation;Information Collection; Evaluation of Export Offers

AGENCIES: Department of Defense (DoD), General Services Administration (GSA), and National Aeronautics and Space Administration (NASA).

ACTION: Notice of request for public comments regarding an extension to an existing OMB clearance.

SUMMARY: Under the provisions of the Paperwork Reduction Act of 1995 (44 U.S.C. Chapter 35), the Federal Acquisition Regulation (FAR) Secretariat will be submitting to the Office of Management and Budget (OMB) a request to review and approve an extension of a currently approved information collection requirement concerning evaluation of export offers. The clearance currently expires on August 31, 2005.

Public comments are particularly invited on: Whether this collection of information is necessary for the proper performance of functions of the FAR, and whether it will have practical utility; whether our estimate of the public burden of this collection of information is accurate, and based on valid assumptions and methodology; ways to enhance the quality, utility, and clarity of the information to be collected; and ways in which we can minimize the burden of the collection of information on those who are to respond, through the use of appropriate technological collection techniques or other forms of information technology.

DATES: Submit comments on or before July 18, 2005.

ADDRESSES: Submit comments regarding this burden estimate or any other aspect of this collection of information, including suggestions for reducing this burden to the General Services Administration, FAR Secretariat (VIR), 1800 F Street, NW, Room 4035, Washington, DC 20405.

FOR FURTHER INFORMATION CONTACT: Ms. Jeritta Parnell, Contract Policy Division, GSA (202) 501–4082.

SUPPLEMENTARY INFORMATION:

A. Purpose

Offers submitted in response to Government solicitations must be evaluated and awards made on the basis of the lowest laid down cost to the Government at the overseas port of discharge, via methods and ports compatible with required delivery dates and conditions affecting transportation known at the time of evaluation. Offers are evaluated on the basis of shipment through the port resulting in the lowest cost to the Government. This provision collects information regarding the vendor's preference for delivery ports. The information is used to evaluate offers and award a contract based on the lowest cost to the Government.

B. Annual Reporting Burden

Respondents: 100.

Responses Per Respondent: 4.

Annual Responses: 400.

Hours Per Response: .25.

Total Burden Hours: 100.

OBTAINING COPIES OF PROPOSALS: Requesters may obtain a copy of the information collection documents from the General Services Administration, FAR Secretariat (VIR), Room 4035, 1800 F Street, NW, Washington, DC 20405, telephone (202) 501–4755. Please cite OMB Control No. 9000–0057, Evaluation of Export Offers, in all correspondence.

Dated: May 13, 2005.

Julia B. Wise,

Director, Contract Policy Division.

[FR Doc. 05–10017 Filed 5–18–05; 8:45 am]
BILLING CODE 6820–EP–S

DEPARTMENT OF DEFENSE

GENERAL SERVICES ADMINISTRATION

NATIONAL AERONAUTICS AND SPACE ADMINISTRATION

[OMB Control No. 9000–0061]

Federal Acquisition Regulation; Information Collection; Transportation Requirements

AGENCIES: Department of Defense (DOD), General Services Administration (GSA), and National Aeronautics and Space Administration (NASA).

ACTION: Notice of request for public comments regarding an extension to an existing OMB clearance.

SUMMARY: Under the provisions of the Paperwork Reduction Act of 1995 (44 U.S.C. Chapter 35), the Federal Acquisition Regulation (FAR) Secretariat will be submitting to the Office of Management and Budget (OMB) a request to review and approve an extension of a currently approved information collection requirement concerning transportation requirements. The clearance currently expires on October 31, 2005.

Public comments are particularly invited on: Whether this collection of information is necessary for the proper performance of functions of the FAR, and whether it will have practical utility; whether our estimate of the public burden of this collection of information is accurate, and based on valid assumptions and methodology; ways to enhance the quality, utility, and clarity of the information to be collected; and ways in which we can minimize the burden of the collection of information on those who are to respond, through the use of appropriate technological collection techniques or other forms of information technology.

DATES: Submit comments on or before July 18, 2005

ADDRESSES: Submit comments regarding this burden estimate or any other aspect of this collection of information, including suggestions for reducing this burden to the General Services Administration, FAR Secretariat (VIR), 1800 F Street, NW, Room 4035, Washington, DC 20405.

FOR FURTHER INFORMATION CONTACT: Jeritta Parnell, Contract Policy Division, GSA (202) 501–4082.

SUPPLEMENTARY INFORMATION:

A. Purpose

FAR Part 47 and related clauses contain policies and procedures for applying transportation and traffic management considerations in the acquisition of supplies and acquiring transportation or transportation-related services. Generally, contracts involving transportation require information regarding the nature of the supplies, method of shipment, place and time of shipment, applicable charges, marking of shipments, shipping documents and other related items. This information is required to ensure proper and timely shipment of Government supplies.

B. Annual Reporting Burden

Respondents: 65,000.
Responses Per Respondent: 21.32.
Annual Responses: 1,385,800.
Hours Per Response: .048.
Total Burden Hours: 66,518.
OBTAINING COPIES OF PROPOSALS: Requesters may obtain a copy of the information collection documents from the General Services Administration, FAR Secretariat (VIR), Room 4035, 1800 F Street, NW, Washington, DC 20405, telephone (202) 501–4755. Please cite OMB Control No. 9000–0061, Transportation Requirements, in all correspondence.

Dated: May 16, 2005.

Julia B. Wise,

Director, Contract Policy Division.

[FR Doc. 05–10019 Filed 5–18–05; 8:45 am]

BILLING CODE 6820–EP–S

DEPARTMENT OF DEFENSE

Office of the Secretary

National Security Education Board Meeting

AGENCY: National Defense University.

ACTION: Notice of meeting.

SUMMARY: Pursuant to Public Law 92–463, notice is hereby given of a forthcoming meeting of the National Security Education Board. The purpose of the meeting is to review and make recommendations to the Secretary concerning requirements established by the David L. Boren National Security Education Act, Title VIII of Public Law 102–183, as amended.

DATES: June 14, 2005.

ADDRESSES: The Academy for Educational Development (AED), 1825 Connecticut Avenue, NW., 8th Floor Conference Room, Washington, DC 20009–1202.

FOR FURTHER INFORMATION CONTACT: Dr. Edmond J. Collier, Deputy Director, National Security Education Program, 1101 Wilson Boulevard, Suite 1210, Rosslyn, Virginia 22209–2248; (703) 696–1991. Electronic mail address: *colliere@ndu.edu.*

SUPPLEMENTARY INFORMATION: The Board meeting is open to the public.

Dated: May 13, 2005.

L.M. Bynum,

Alternate OSD Federal Register Liaison Officer, Department of Defense.

[FR Doc. 05–9954 Filed 5–18–05; 8:45 am]

BILLING CODE 5001–06–M

DEPARTMENT OF DEFENSE

Department of the Army

Corps of Engineers

Intent To Prepare a Draft Environmental Impact Statement for the Louisiana Coastal Area (LCA)—Louisiana, Caminada Headland and Shell Island Restoration Feasibility Study

AGENCY: Department of the Army, U.S. Army Corps of Engineers, DoD.

ACTION: Notice of intent.

SUMMARY: This notice of intent (NOI) for the Louisiana Coastal Area (LCA)—Louisiana, Caminada Headland and Shell Island Restoration Feasibility Study (LCA Caminada-Shell Island Study) supersedes the notices of intent for the Barrier Shoreline Restoration in Lafourche, Jefferson, and Plaquemines Parishes, Louisiana, a Component of the Louisiana Coastal Area, Louisiana—Ecosystem Restoration, Barrier Island Restoration, Marsh Creation, and River Diversion, Barataria Basin Feasibility Study (Barrier Shoreline Restoration Study); and the Wetland Restoration and/or Creation in the Barataria Basin, Louisiana, a Component of the Louisiana Coastal Area, Louisiana—Ecosystem Restoration, Barrier Island Restoration, Marsh Creation, and River Diversion, Barataria Basin Feasibility Study (LCA Wetland Restoration Study). This notice of intent addresses the Caminada Headland and Shell Island reaches of the Barataria barrier shoreline that is presently addressed in the NOI for the Barrier Shoreline Restoration Study and also addresses the Chenier Unit marsh creation feature that is presently addressed in the NOI for the Wetland Restoration Study.

DATES: Scoping meetings will be conducted during the 30-day scoping meeting comment period so that scoping meeting comments will be accepted up to 10 days following the final scoping meeting.

ADDRESSES: Scoping comments regarding the Draft EIS (DEIS) for the

LCA Caminada Headland and Shell Island Restoration Feasibility Study may be provided orally or in writing at the scoping meetings; sent via email to *LCACSI@mvn02.usace.army.mil*; sent via the Worldwide Web at *http://www.LCA.gov*; or sent via letter postmarked not later than the close of the scoping comment period to Dr. William P. Klein, Jr., CEMVN–PM–RS, P.O. Box 60267, New Orleans, LA 70160–0267. Comments will not be accepted if submitted by facsimile (fax).

FOR FURTHER INFORMATION CONTACT: Dr. William P. Klein, Jr., (504) 862–2540.

SUPPLEMENTARY INFORMATION:

1. Background: On April 28, 2000 a NOI was published in the **Federal Register** (65 FR 24944) for preparing an Environmental Impact Statement (EIS) for the Barrier Shoreline Restoration in Lafourche, Jefferson, and Plaquemines Parishes, Louisiana, a Component of the Louisiana Coastal Area, Louisiana—Ecosystem Restoration, Barrier Island Restoration, Marsh Creation, and River Diversion, Barataria Basin Feasibility Study (LCA Barrier Shoreline Restoration Study). On May 5, 2000 a notice of intent was published in the **Federal Register** (65 FR 26192) for preparing an EIS for the Wetland Restoration and/or Creation in the Barataria Basin, Louisiana, a Component of the Louisiana Coastal Area, Louisiana—Ecosystem Restoration, Barrier Island Restoration, Marsh Creation, and River Diversion, Barataria Basin Feasibility Study (LCA Wetland Creation Study). Investigation of these studies was temporarily suspended pending completion of the near-term Louisiana Coastal Area (LCA), Louisiana Ecosystem Restoration Feasibility Study (LCA Ecosystem Restoration Study). A final programmatic EIS for the LCA Ecosystem Restoration Study was released for public comment in November 2004, completed in December 2004, and the related Chief of Engineers Report was signed on January 31, 2005. The programmatic findings specify recommendations that refocus and advance planning, scientific, and restoration efforts that are already underway. The Corps believes these findings have influenced the purpose and need for action and the scope of the analysis of the LCA Caminada Headland and Shell Island Restoration Feasibility Study. Hence, the Corps proposes to prepare a draft EIS for the LCA Caminada Headland and Shell Island Restoration Feasibility Study.

The EIS will document the NEPA (National Environmental Policy Act of 1969) process identifying and assessing reasonable alternatives to proposed actions that will avoid or minimize adverse effects of these actions upon the quality of the human environment. Specifically, the EIS will analyze the potential direct, indirect, and cumulative impacts of implementing barrier shoreline restoration and wetland restoration in Lafourche, Plaquemines, and portions of Jefferson Parishes, Louisiana. The LCA Caminada-Shell Island Restoration Study, as stated in the January 2005 Chiefs Report, is one of 15 near-term features of the LCA Ecosystem Restoration Plan. Each of the 15 LCA projects will address critical near-term, site-specific restoration actions across the Louisiana coast. The study investigating the Caminada Headland and Shell Island reaches of the Barataria Barrier Shoreline initiates detailed feasibility-level plan formulation and environmental impacts analysis.

2. Proposed Action and Reasonable Alternatives. This restoration feature involves mining offshore and/or riverine sediment sources to reestablish a sustainable barrier system (*e.g.* barrier islands, shorelines, and headlands) at Caminada Headland and Shell Island. The proposed action will build upon the alternatives considered under the LCA Barrier Shoreline Restoration Study and the LCA Wetland Creation Study. The proposed action will consider all reasonable alternatives for restoration of the Caminada Headland and Shell Island, including: Consideration of offshore, nearshore, riverine, and other borrow sources; varying widths and configurations of barrier shoreline and dune heights; marsh restoration as a platform for barrier shoreline rollover; as well as other recommendations from the public and interested parties. The Caminada Headland and Shell Island reaches are critical components of the Barataria Barrier System. The Caminada headland protects one of the highest concentrations of near-gulf oil and gas infrastructure in the coastal zone. This reach of the Barataria shoreline also supports the only land-based access to the barrier shoreline in the Deltaic Plain. The Shell Island segment has been nearly lost, and failure to take restorative action could result in the loss of any future options for restoration. Loss of the Shell Island segment would result in permanent modification of the tidal hydrology of the Barataria Basin. The Shell Island segment is the only remaining natural barrier between the Gulf and lower Plaquemines Parish.

3. Scoping Process. The Council on Environmental Quality (CEQ) regulations implementing the NEPA process directs federal agencies that have made a decision to prepare an environmental impact statement to engage in a public scoping process. The scoping process is designed to provide an early and open means of determining the scope of issues (problems, needs, and opportunities) to be identified and addressed in the draft environmental impact assessment. Scoping is the process used to: (a) Identify the affected public and agency concerns; (b) facilitate an efficient EIS preparation process; (c) define the issues and alternatives that will be examined in detail in the EIS; and (d) save time in the overall process by helping to ensure that the draft statements adequately address relevant issues. Scoping is a process, not an event or a meeting. It continues throughout the planning for a draft EIS and may involve meetings, telephone conversations, and/or written comments.

4. Request for Scoping Comments. In June 2005, the Corps will conduct scoping meetings to determine the scope of issues to be addressed and for identifying the significant issues related to the draft Environmental Impact Statement (DEIS) for the Louisiana Coastal Area (LCA), Louisiana—Caminada Headland and Shell Island Restoration Feasibility Study. Notices will be mailed to the affected and interested public once the dates and locations of the scoping meetings have been established. The Corps invites scoping input concerning the following scoping focus questions: *Question #1:* What are the critical natural and human environmental problems and needs that should be addressed in the DEIS? For example, critical natural and human ecological needs may include: barrier shoreline sustainability, navigation, barrier shoreline habitat restoration, hurricane and flood protection, protection of human infrastructure, and others. *Question #2:* What are the significant resources that should be considered in the DEIS? For example, significant resources may include: Barrier shorelines, offshore sand resources, water quality, threatened and endangered species, and others. *Question #3:* What are the reasonable restoration alternatives that should be considered in the DEIS? For example, consider alternative borrow sites from inland reaches of the Mississippi River and outside the system, rock the entire shoreline, use hardened structures such as break waters, re-establish the barrier shoreline further inland, emphasize marsh creation as major component of barrier shoreline restoration, and others. Interested parties are encouraged to provide their input and

recommendations for all significant issues of the study.

Scoping comments will be compiled, analyzed, and utilized in the plan formulation process. A Scoping Report, summarizing the comments, will be made available to all scoping participants and published on the Louisiana Coastal Area Web site (*http://www.LCA.gov*). Scoping comments will be accepted throughout the scoping comment period (see **DATES**).

5. Public Involvement. Scoping is a critical component of the overall public involvement program. An intensive public involvement program will continue throughout the study to solicit input from affected Federal, State, and local agencies, Indian tribes, and other interested parties.

6. Interagency Coordination and Cooperation. Pursuant to section 1501.6 of the NEPA (30 CFR parts 1500–1508), the following agencies have been invited to participate in the study as cooperating agencies on the EIS: Minerals Management Service, National Marine Fisheries Service, Natural Resources Conservation Service, U.S. Environmental Protection Agency, U.S. Fish and Wildlife Service, U.S. Geological Service, Louisiana Department of Environmental Quality, Louisiana Department of Natural Resources, and the Louisiana Department of Wildlife and Fisheries. The U.S. Fish and Wildlife Service will provide a Fish and Wildlife Coordination Act Report. Coordination will be maintained with the U.S. Fish and Wildlife Service and the National Marine Fisheries Service regarding threatened and endangered species under their respective jurisdictional responsibilities. Coordination will be maintained with the National Marine Fisheries Service regarding essential fish habitat. Coordination will be maintained with the Natural Resources Conservation Service regarding prime and unique farmlands. The U.S. Department of Agriculture will be consulted regarding the ''Swampbuster'' provisions of the Food Security Act. Coordination will be maintained with the U.S. Environmental Protection Agency concerning compliance with Executive Order 12898, ''Federal Action to Address Environmental Justice in Minority Populations and Low-Income Populations.'' Coordination will be maintained with the Advisory Counsel on Historic Preservation and the State Historic Preservation Officer. The Louisiana Department of Natural Resources will be consulted regarding consistency with the Coastal Zone Management Act. The Louisiana Department of Wildlife and Fisheries will be contacted concerning potential impacts to Natural and Scenic Streams.

7. Availability of Draft EIS. It is anticipated that the Draft EIS will be available for public review during the late summer of 2005. A 45-day review period will be provided so that all interested agencies, groups and individuals will have an opportunity to comment on the Draft EIS. In addition, public meetings will be held during the review period to receive comments and address questions concerning the Draft EIS.

Dated: May 9, 2005.

Peter J. Rowan,

Colonel, U.S. Army, District Engineer.

[FR Doc. 05–9997 Filed 5–18–05; 8:45 am]

BILLING CODE 3710–84–P

DEPARTMENT OF DEFENSE

Department of the Army; Corps of Engineers

Intent To Prepare a Draft Environmental Impact Statement for the Kissimmee Chain of Lakes Portion of the Kissimmee River Restoration Project

AGENCY: Department of the Army, U.S. Army Corps of Engineers, DoD.

ACTION: Notice of intent.

SUMMARY: The Jacksonville District, U.S. Army Corps of Engineers, intends to prepare a Draft Environmental Impact Statement (DEIS) for the Kissimmee Chain of Lakes (KCOL) portion of the Kissimmee River Restoration (KRR) project. This project involves the establishment of a coordinated schedule of water level drawdowns throughout the seventeen lakes comprising the Kissimmee Chain of Lakes (KCOL), for the ultimate purpose of facilitating environmental restoration throughout those water bodies. The local sponsor is the South Florida Water Management District.

FOR FURTHER INFORMATION CONTACT: Mr. Esteban Jimenez, 904–232–2115, Special Projects Section, Environmental Branch, Planning Division, P.O. Box 4970, Jacksonville, FL 32232-0019.

SUPPLEMENTARY INFORMATION: The authority to conduct this comprehensive analysis is granted under Section 206 of the 1996 Water Resources Development Act. The Kissimmee River Basin flood control works were authorized by the Rivers and Harbors Act of 1954 as an addition to the Central & South Florida Flood Control Project. The primary project purposes are restoration of natural flooding in the historic floodplain in order to reestablish wetland conditions while maintaining the existing protection against flood damages within the Kissimmee Basin, and to improve the environmental setting of the KCOL area.

The proposed action on the Kissimmee Chain of Lakes includes: Lake Hart, Lake Mary Jane, East Lake Tohopekaliga, Lake Myrtle, Lake Preston, Lake Conlin, Lake Tohopekaliga, Lake Gentry, Lake Russell, Cypress Lake, Lake Marion, Lake Hatchinehea, Lake Pierce, Lake Rosalie, Tiger Lake, Lake Jackson, Lake Marian, and Lake Weohykapka. The lakes are all located in the Upper Kissimmee River Upper Basin (KRUB), and covers both Osceola and Polk Counties in Florida.

The objective of the study is to evaluate the possibility of implementing revised regulation schedules for the Upper Kissimmee Chain of Lakes. This is so that common and coordinated regulation schedules can be enacted for the Chain of Lakes, in order to facilitate ecosystem restoration.

Flora and Fauna—The 35,000 acres of wetlands that existed in the Kissimmee River Flood Plain prior to canalization are estimated to have declined to about 14,000 acres in the existing condition. Existing conditions of flora and fauna in the KB are addressed below.

TOTAL EXISTING ACREAGES OF WETLAND HABITATS IN THE KISSIMMEE RIVER FLOOD PLAIN

Type	Total	Percent
Wetland Forested:		
Cypress	262	1.9
Wetland Prairie:		
Rhynchospora	1005	7.2
Aquatic Grass	2359	16.8
Maidencane	2743	19.5
Wetland Shrub:		
Buttonbrush	803	5.7
Primrose Willow	693	4.9
Willow	1639	11.7
Broadleaf	3447	24.4
Switchgrass	471	3.4
Tussock	630	4.5
Total	14052	100

The lakes are generally surrounded by pine flatwoods, dry and wet prairies, and cypress domes.

Wildlife in the Kissimmee River Lower Basin (KRLB) consists of deer, small mammals, alligators and small reptiles, amphibians, invertebrates, wading birds, and ducks. Because of the large expanse of area involved, the following Federally-listed threatened or endangered species could occur in both the KRUB and KRLB: Bald eagle, snail

kite, indigo snake, Audubon's crested caracara, wood stork, and grasshopper sparrow.

Endangered and threatened species in the KB include:

—Endangered: Bald eagle, snail kite, wood stork, whooping crane, and Audubon's crested caracara, and Florida grasshopper sparrow.
—Threatened: Indigo snake.
—State listed as threatened species: Sandhill crane.
—Species of special concern: American alligator, snowy egret, gopher tortoise, osprey, burrowing owl, limpkin, little blue heron, least tern, and tricolored heron.

Fluctuating water levels of the lake littoral zones are important for over wintering waterfowl that utilize these lakes during migrational periods. Wading birds use the littoral zone as an important feeding habitat.

Alternatives: The various scheduling alternatives will be developed upon modeling based on the determination of the existing environment and the goals to be attained. The no action alternative will be considered.

Issues: The proposed action is to modify the regulation schedules for the Upper Kissimmee Chain of Lakes, to include periodic extreme low water stages for the purposes of enhancing the lake's environmental resources and improving the physical and chemical characteristics of these lakes. This habitat enhancement technique involves lowering lakes to consolidate bottom sediments and expand desirable aquatic plant communities. The extreme drawdown of these areas mimic low water conditions prior to flood control (activities which result in more stable water levels than would occur naturally). Low water levels historically occurred about every seven to ten years. The drawdown will be coordinated with the South Florida Water Management District (SFWMD).

Habitat enhancement activities would be carried out by the Florida Fish and Wildlife Conservation commission (FWC) or other acting under it. The FWC would obtain all necessary permits.

Enhancement activities may include muck removal, burning, discing and herbicide application to reduce dense vegetation, tussock formation and organic build-up on lake bottoms.

Scoping: Scoping public and agency comments on this work will begin June 2005 by means of a scoping letter. In addition, all parties are invited to participate in the scoping process by identifying any addition concerns on issues, studies needed, alternatives, procedures, and other matters related to the scoping process. At this time, there are no plans for a public scoping meeting.

Public Involvement: We invite the participation of affected Federal, state, and local agencies, affected Indian tribes, and other interested private organizations and parties.

Coordination: The proposed action is being coordinated with the Fish and Wildlife Service (FWS) under Section 7 of the Endangered Species Act, and the Fish and Wildlife Coordination Act, and with the State Historic preservation Officer.

Other Environmental Review and Consultation: The proposed action would involve evaluation for compliance with guidelines pursuant to section 404(b) of the Clean Water Act; application to the State of Florida for Water Quality Certification pursuant to section 401 of the Clean Water Act; and certification of state islands, easements, and rights of way.

Agency Role: As non-Federal sponsor and leading local expert; the South Florida Water Management District (SFWMD) will provide extensive information and assistance on the resources to be impacted, mitigation measures, and alternatives.

DEIS Preparation: It is estimated that the DEIS will be available to the public on or about November 2006.

Dated: May 10, 2005.

Dennis W. Barnett,

Acting Chief, Planning Division.

[FR Doc. 05–9996 Filed 5–18–05; 8:45 am]

BILLING CODE 3710–A5–M

DEPARTMENT OF DEFENSE

Department of the Army; Corps of Engineers

Intent to Prepare a Draft Environmental Impact Statement (DEIS) for the Nourishment of 7.25 Miles of Beach, the Repositioning of the New River Inlet Channel, and the Implementation of an Inlet Management Plan, in North Topsail Beach, Onslow County, NC

AGENCY: Department of the Army, U.S. Army Corps of Engineers, DoD.

ACTION: Notice of intent.

SUMMARY: The U.S. Army Corps of Engineers (COE), Wilmington District, Wilmington Regulatory Field Office has received a request for Department of the Army authorization, pursuant to Section 404 of the Clean Water Act and Section 10 of the Rivers and Harbor Act, from the Town of North Topsail Beach to nourish approximately 7.25 miles of beachfront to protect residential homes and town infrastructures, and to implement an inlet management plan with the New River Inlet to control the positioning of the inlet channel. The new channel will be centrally located perpendicular to the adjacent shorelines of North Topsail Beach and Onslow Beach. The proposed source of the material for the nourishment will be dredged from offshore borrow area(s) and from the repositioning of the inlet. The placement of beach fill along the Town's shoreline would result in the initial widening of the beach by 50 to 100 feet. The widened beach would be maintained through a program of undefined periodic beach nourishment events with the material extracted primarily from the New River Inlet.

The ocean shoreline in the Town of North Topsail Beach encompasses approximately 11.1 miles along the northern end of Topsail Island. Currently, the U.S. Army Corps of Engineers is developing a Federal shoreline protection plan for parts of North Topsail Beach. This Federal plan will only cover 3.85 miles of the southern part of the beach. The remaining 7.25-miles of North Topsail Beach, with the exception of two small areas, is located within the Coastal Barrier Resource System (CBRS), which prohibits the expenditure of Federal funds that would encourage development. Therefore, the Town is pursuing to develop this non-Federal shoreline protection plan that will preserve existing development and infrastructure along the 7.25 miles of shoreline.

The channel through New River Inlet has been maintained by the COE for commercial and recreational boating interest for over 55 years. The COE is authorized to maintain the channel in the inlet to a depth of 6 feet mean low water (mlw) over a width of 90 feet.

DATES: A public scoping meeting for the Draft EIS will be held at Dixon High School located on Highway 17, on June 7, 2005 at 6 p.m. Written comments will be received until June 21, 2005.

ADDRESSES: Copies of comments and questions regarding scoping of the Draft EIS may be addressed to: U.S. Army Corps of Engineers, Wilmington District, Regulatory Division, ATTN: File Number 200500344, Post Office Box 1890, Wilmington, NC 28402–1890.

FOR FURTHER INFORMATION CONTACT: Questions about the proposed action and DEIS can be directed to Mr. Mickey Sugg, Wilmington Regulatory Field Office, telephone: (910) 251–4811.

SUPPLEMENTARY INFORMATION: 1. Project Description. The Town of North Topsail

Beach, located along the north-northeast 11.1 miles of Topsail Island, North Carolina, is proposing to nourish approximately 7.25 miles of beach and reposition New River Inlet channel as a means to address a severe erosion problem that is threatening development and town infrastructure. The entire stretch of the Town's shoreline has experienced a considerable amount of erosion over the last 20 years due primarily to the impact of numerous tropical storms and hurricane during the mid to late 1990's and due to impacts of the uncontrolled movement of the main ebb channel in New River Inlet. The Town has stated that the shoreline erosion and residual effects of the storms have left North Topsail Beach in an extremely vulnerable position with regard to its ocean front development and infrastructure. They have estimated that over $250 million in property tax value as well as roads, water and sewer lines, and other utilities are at risk.

The project area is divided into the North Section and the Central Section

(**Note:** The South Section is part of the Federal shoreline protection plan). The North Section is further divided into two parts. One comprises approximately 5,800 linear feet, or 1.1 mile, of the project and is located along the northern end of the island. This area will receive material solely from the dredging of the New River Inlet when the channel is repositioned and realigned through the ebb tide delta. The new channel is expected to result in widening of the north of the Town's shoreline as the shoreline responds to the ebb tide delta configuration that would accompany the relocated channel. In addition to the placement of the material in the North Section, a portion of the inlet material will be deposited on the southern end of Onslow Beach as part of the comprehensive inlet management plan in order to maintain the existing sediment budget on Onslow Beach. The second part of the North Section is approximately 14,200 linear feet along the shoreline and will receive sand from the offshore borrow site(s). The Central Section is located both north and south of NC Hwy 210/55 Bridge and is approximately 16,500 linear feet. Material used to widened this section of the beach will also be obtained from the offshore borrow area(s).

2. Proposed Action. The scope of activities for the formulation of the shoreline protection and inlet management plans for the Town of North Topsail Beach includes: (a) Detailed geotechnical investigations to define potential offshore borrow site(s); (b) evaluation and design of a new channel for New River Inlet and the development of an inlet management plan; (c) design and evaluation of beach fill sections including an assessment of the potential impacts of the offshore borrow area(s) on sediment transport; (d) near shore and inlet habitat mapping; and (e) hard bottom investigations. All geospatial data collected for the North Topsail Beach project will be included in a GIS database developed for the project.

Potential offshore borrow areas, previously identified by work conducted by the Wilmington District Corps of Engineers, will be evaluated in detail using jet probes; seismic, sidescan, and magnetometer surveys; as well as vibracores. Samples of the offshore material collected form the jet probes and vibracores will be used to define the preliminary boundaries of the offshore borrow area(s) and make a preliminary determination of the compatibility of the borrow material to the native beach material. The boundaries of the potential borrow area(s) will take into consideration the location and extent of hard bottom resources identified by the sidescan and seismic surveys, as well as in-waters surveys. The boundaries of the proposed offshore borrow site(s) will also be refined to avoid historically significant archaeological artifacts located by the magnetometer surveys and verified through field investigations. Once the boundaries of the potential borrow area(s) are finalized, a final sediment compatibility analysis will be conducted.

The beach fill designs presented in the feasibility study will be refined by analyzing existing profiles to determine potential erosion and storm impacts on back beach features such as vegetation, structures, and infrastructure. Specific designs will be developed for up to five characteristic profiles for the Central and North Sections. Design variations will be considered at discrete beach sections where unique upland features require special accommodation. The composite nature of the final beach and inlet design will require a more complex sequencing in construction operations than normally required for renourishment projects. The method and order of operations will be determined in order to optimize constructability and reduce costs.

Beach planform performance will be evaluated based on the numerical modeling for the proposed projects. The GENESIS numerical model will be used in conjunction with a wave transformation model (STWAVE) to evaluate shoreline positions in time. The wave transformation model will be used to determine changes in wave patterns associated with the near shore borrow area(s). The state-of-the-art GENESIS version will be used so that the project area may be incorporated into a single simulation domain. The historical changes of the project area shoreline will be used to calibrate and verify the model, using an error minimization approach. Adjustments to the wave data used as input within the models will be made as required to replicate observed performance. The GENESIS model will be used to identify optimum alongshore fill placement.

A detailed geomorphic study of New River Inlet was accomplished during the feasibility phase of the project development. The geomorphic study used aerial photographs to evaluate changes in New River Inlet from 1962 and 2003 and develop relationships between the configuration of the New River Inlet ebb tide delta and the behavior of the shorelines on the north end of the North Topsail Beach and the south end of Onslow Beach. The geomorphic study concluded that the most desirable location and orientation of the channel through the ebb tide delta, in terms of impacts on the adjacent islands, is one located closer to North Topsail Beach and oriented essentially perpendicular to the general alignment of the adjacent shorelines. The feasibility phase of the project development also included a preliminary numerical model evaluation of the impact of the relocated channel of flows and flow distributions in the New River Inlet complex.

The next phase of the channel design will include additional numerical model evaluations of a wider range of channel alternatives (channel depths, widths, and locations) and will incorporate modifications in the configuration of the ebb tide delta expected to occur in response to the new channel. The reconfigured ebb tide delta will also be used to determine the potential changes in wave patterns north and south of New River Inlet and the impacts these changes could have on longshore sediment transport and shoreline behavior.

The potential shoaling characteristics of the new channel will be evaluated using empirical shoaling algorithms developed for inlets in North Carolina. The propensity of the new channel to migrate to the north and/or south and possible future changes in the channel alignment will be based on observed changes in New River Inlet as documented by the geomorphic analysis. The potential changes in longshore sediment transport patterns on North Topsail Beach and Onslow

Beach associated changes in wave patterns together with the channel shoaling analysis will be used to develop a with-project sediment budget. The with-project sediment budget will be compared to the existing sediment budget to determine sand bypassing requirements that would be needed to maintain the existing sediment budget of the adjacent islands.

3. Issues. There are several potential environmental issues that will be addressed to the FIS. Additional issues may be identified during the scoping process. Issues initially identified as potentially significant include:

a. Potential impact to marine biological resources (benthic organisms, passageway for fish and other marine life) and Essential Fish Habitat, particularly Hard Bottoms.

b. Potential impact to threatened and endangered marine mammals, birds, fish, and plants.

c. Potential impacts to water quality.

d. Potential increase in erosion rates to adjacent Onslow Beach.

e. Potential effects on military training on U.S. Marine Corps Camp Lejeune Base.

f. Potential impacts to Navigation, commercial and recreational.

g. Potential impacts to the long-term management of New River Inlet.

h. Potential impacts to private and public property.

i. Cumulative impacts of Inlet and Inlet channel relocations throughout North Carolina.

j. Cumulative impacts for using inlets as sand source in nourishment projects.

k. Potential impacts on public health and safety.

l. Potential impacts to recreational and commercial fishing.

m. The compatibility of the material for nourishment.

n. Potential economic impacts.

4. Alternatives. Several alternative borrow areas are being considered for the proposed project. These alternatives will be further formulated and developed during the scoping process and an appropriate range of alternatives, including the no federal action alternative, will be considered in the EIS.

5. Scoping Process. A public scoping meeting (*see* **DATES** will be held to receive public comment and assess public concerns regarding the appropriate scope and preparation of the Draft EIS. Participation in the public meeting by federal, state, and local agencies and other interested organizations and persons is encouraged.

The COE will also be consulting with the U.S. Fish and Wildlife Service under the Endangered Species Act and the Fish and Wildlife Coordination Act, and with the National Marine Fisheries Service under the Magnuson-Stevens Act and Endangered Species Act. Additionally, the EIS will assess the potential water quality impacts pursuant to Section 401 of the Clean Water Act, and will be coordinated with the North Carolina Division of Coastal Management (DCM) to determine the projects consistency with the Coastal Zone Management Act. The COE will closely work with DCM through the EIS to ensure the process complies with all State Environmental Policy Act (SEPA) requirements. It is the COE and DCM's intentions to consolidate both NEPA and SEPA processes to eliminate duplications.

6. Availability of the Draft EIS. The Draft EIS is expected to be published and circulated sometime in early 2006, and a public hearing will be held after the publication of the Draft EIS.

Dated: May 12, 2005.

George T. Burch,

Chief of Staff.

[FR Doc. 05–9995 Filed 5–18–05; 8:45 am]

BILLING CODE 3710–6N–M

DEPARTMENT OF EDUCATION

Submission for OMB Review; Comment Request

AGENCY: Department of Education.

SUMMARY: The Leader, Information Management Case Services Team, Regulatory Information Management Services, Office of the Chief Information Officer invites comments on the submission for OMB review as required by the Paperwork Reduction Act of 1995.

DATES: Interested persons are invited to submit comments on or before June 20, 2005.

ADDRESSES: Written comments should be addressed to the Office of Information and Regulatory Affairs, Attention: Carolyn Lovett, Desk Officer, Department of Education, Office of Management and Budget, 725 17th Street, NW., Room 10235, New Executive Office Building, Washington, DC 20503 or faxed to (202) 395–6974.

SUPPLEMENTARY INFORMATION: Section 3506 of the Paperwork Reduction Act of 1995 (44 U.S.C. chapter 35) requires that the Office of Management and Budget (OMB) provide interested Federal agencies and the public an early opportunity to comment on information collection requests. OMB may amend or waive the requirement for public consultation to the extent that public participation in the approval process would defeat the purpose of the information collection, violate State or Federal law, or substantially interfere with any agency's ability to perform its statutory obligations. The Leader, Information Management Case Services Team, Regulatory Information Management Services, Office of the Chief Information Officer, publishes that notice containing proposed information collection requests prior to submission of these requests to OMB. Each proposed information collection, grouped by office, contains the following: (1) Type of review requested, *e.g.* new, revision, extension, existing or reinstatement; (2) title; (3) summary of the collection; (4) description of the need for, and proposed use of, the information; (5) respondents and frequency of collection; and (6) reporting and/or recordkeeping burden. OMB invites public comment.

Dated: May 13, 2005.

Angela C. Arrington,

Leader, Information Management Case Services Team, Regulatory Information Management Services, Office of the Chief Information Officer.

Office of the Undersecretary

Type of Review: New.

Title: Private School Participation Study.

Frequency: One time.

Affected Public: Not-for-profit institutions; State, local, or tribal gov't, SEAs or LEAs.

Reporting and Recordkeeping Hour Burden:

Responses: 1,490.

Burden Hours: 745.

Abstract: This review asks for clearance for an evaluation of the participation of private school students in federal education programs.

Requests for copies of the submission for OMB review; comment request may be accessed from *http://edicsweb.ed.gov*, by selecting the ''Browse Pending Collections'' link and by clicking on link number 2714. When you access the information collection, click on ''Download Attachments'' to view. Written requests for information should be addressed to U.S. Department of Education, 400 Maryland Avenue, SW., Potomac Center, 9th Floor, Washington, DC 20202–4700. Requests may also be electronically mailed to the Internet address *OCIO_RIMG@ed.gov* or faxed to 202–245–6621. Please specify the complete title of the information collection when making your request.

Comments regarding burden and/or the collection activity requirements should be directed to Katrina Ingalls at

her e-mail address *Katrina.Ingalls@ed.gov*. Individuals who use a telecommunications device for the deaf (TDD) may call the Federal Information Relay Service (FIRS) at 1–800–877–8339.

[FR Doc. 05–9965 Filed 5–18–05; 8:45 am]

BILLING CODE 4000–01–P

DEPARTMENT OF EDUCATION

Notice of Proposed Information Collection Requests

AGENCY: Department of Education.

SUMMARY: The Leader, Information Management Case Services Team, Regulatory Information Management Services, Office of the Chief Information Officer, invites comments on the proposed information collection requests as required by the Paperwork Reduction Act of 1995.

DATES: Interested persons are invited to submit comments on or before July 18, 2005.

SUPPLEMENTARY INFORMATION: Section 3506 of the Paperwork Reduction Act of 1995 (44 U.S.C. chapter 35) requires that the Office of Management and Budget (OMB) provide interested Federal agencies and the public an early opportunity to comment on information collection requests. OMB may amend or waive the requirement for public consultation to the extent that public participation in the approval process would defeat the purpose of the information collection, violate State or Federal law, or substantially interfere with any agency's ability to perform its statutory obligations. The Leader, Information Management Case Services Team, Regulatory Information Management Services, Office of the Chief Information Officer, publishes that notice containing proposed information collection requests prior to submission of these requests to OMB. Each proposed information collection, grouped by office, contains the following: (1) Type of review requested, *e.g.* new, revision, extension, existing or reinstatement; (2) title; (3) summary of the collection; (4) description of the need for, and proposed use of, the information; (5) respondents and frequency of collection; and (6) reporting and/or recordkeeping burden. OMB invites public comment.

The Department of Education is especially interested in public comment addressing the following issues: (1) Is this collection necessary to the proper functions of the Department; (2) will this information be processed and used in a timely manner; (3) is the estimate of burden accurate; (4) how might the Department enhance the quality, utility, and clarity of the information to be collected; and (5) how might the Department minimize the burden of this collection on the respondents, including through the use of information technology.

Dated: May 13, 2005.

Angela C. Arrington,

Leader, Information Management Case Services Team, Regulatory Information Management Services, Office of the Chief Information Officer.

Office of Special Education and Rehabilitative Services

Type of Review: Extension.

Title: Report of Randolph-Sheppard Vending Facility Program.

Frequency: Annually.

Affected Public: Federal government.

Reporting and Recordkeeping Hour Burden:

Responses: 51.

Burden Hours: 702.

Abstract: The information is needed to evaluate the effectiveness of the Program and to promote growth. The information is transmitted to State agencies to assist in the conduct and expansion of the Program at the State level. Respondents are the designated vocational rehabilitation agencies.

Requests for copies of the proposed information collection request may be accessed from *http://edicsweb.ed.gov*, by selecting the ''Browse Pending Collections'' link and by clicking on link number 2775. When you access the information collection, click on ''Download Attachments'' to view. Written requests for information should be addressed to U.S. Department of Education, 400 Maryland Avenue, SW., Potomac Center, 9th Floor, Washington, DC 20202–4700. Requests may also be electronically mailed to the Internet address *OCIO_RIMG@ed.gov* or faxed to 202–245–6621. Please specify the complete title of the information collection when making your request.

Comments regarding burden and/or the collection activity requirements should be directed to Sheila Carey at her e-mail address *Sheila.Carey@ed.gov*. Individuals who use a telecommunications device for the deaf (TDD) may call the Federal Information Relay Service (FIRS) at 1–800–877–8339.

[FR Doc. 05–9966 Filed 5–18–05; 8:45 am]

BILLING CODE 4000–01–P

DEPARTMENT OF ENERGY

Office of Science; Notice of Renewal of the Basic Energy Sciences Advisory Committee

Pursuant to Section 14(a)(2)(A) of the Federal Advisory Committee Act, App. 2, and § 102–3.65, title 41, Code of Federal Regulations and following consultation with the Committee Management Secretariat, General Services Administration, notice is hereby given that the Basic Energy Sciences Advisory Committee has been renewed until June 30, 2005.

The Committee will provide advice to the Office of Science (DOE), on the basic energy sciences program. The Secretary of Energy has determined that renewal of the Basic Energy Sciences Advisory Committee is essential to the conduct of the Department's business and in the public interest in connection with the performance of duties imposed by law upon the Department of Energy. The Committee will continue to operate in accordance with the provisions of the Federal Advisory Committee Act (Pub. L. 92–463), the General Services Administration Final Rule on Federal Advisory Committee Management, and other directives and instructions issued in implementation of those acts.

FOR FURTHER INFORMATION CONTACT: Ms. Rachel Samuel at (202) 586–3279.

Issued in Washington, DC, on May 11, 2005.

James N. Solit,

Advisory Committee Management Officer.

[FR Doc. 05–9999 Filed 5–18–05; 8:45 am]

BILLING CODE 6450–01–P

DEPARTMENT OF ENERGY

DOE Response to Recommendation 2005–1 of the Defense Nuclear Facilities Safety Board, Nuclear Material Packaging.

AGENCY: Department of Energy.

ACTION: Notice.

SUMMARY: The Defense Nuclear Facilities Safety Board Recommendation 2005–1, concerning nuclear material packaging was published in the **Federal Register** on March 21, 2005 (70 FR 13482). In accordance with section 315(b) of the Atomic Energy Act of 1954, as amended, 42 U.S.C. 2286d(b), and the Secretary transmitted the following response to the Defense Nuclear Facilities Safety Board on May 6, 2005.

DATES: Comments, data, views, or arguments concerning the Secretary's

response are due on or before June 16, 2005.

ADDRESSES: Send comments, data, views, or arguments concerning the Secretary's response to: Defense Nuclear Facilities Safety Board, 625 Indiana Avenue, NW., Suite 700, Washington, DC 20004.

FOR FURTHER INFORMATION CONTACT: Mr. Robert J. McMorland, Nuclear Engineer, Departmental Representative to the Defense Nuclear Facilities Safety Board, Department of Energy, U.S. Department of Energy, 1000 Independence Avenue SW., Washington, DC 20585.

Issued in Washington, DC on May 17, 2005.

Mark B. Whitaker, Jr.,

Departmental Representative to the Defense Nuclear Facilities Safety Board.

BILLING CODE 6450–01–U

The Secretary of Energy
Washington, DC 20585

May 6, 2005

The Honorable A. J. Eggenberger
Acting Chairman
Defense Nuclear Facilities Safety Board
625 Indiana Avenue, NW
Suite 700
Washington, DC 20004-2901

Dear Dr. Eggenberger:

The Department of Energy acknowledges receipt of the Defense Nuclear Facilities Safety Board's Recommendation 2005-1, *Nuclear Material Packaging,* issued on March 10, 2005.

In response to Recommendations 94-1, 97-1, and 2000-1, the Department has made significant progress towards stabilizing and safely storing its nuclear materials, primarily plutonium metal and oxide materials and Uranium-233. For example, all of the commitments included in the Implementation Plan for Recommendation 97-1, *Safe Storage of Uranium-233,* and over two-thirds of the commitments in the Implementation Plan for Recommendation 2000-1, *Stabilization and Storage of Nuclear Materials,* have been completed. Your Recommendation 2005-1 addresses storage requirements for other categories of nuclear materials that are beyond the scope of the Implementation Plans for Recommendations 94-1, 97-1, and 2000-1.

The Department accepts Recommendation 2005-1, and will develop an Implementation Plan to identify and issue additional nuclear material packaging and storage requirements. The Plan will address the following activities.

- Specify the nuclear materials to which new requirements will apply. This effort will include conducting a survey of the sites currently storing nuclear materials.

- Develop the technical criteria and requirements that must be satisfied to ensure safe storage and handling of these materials, including the requirements for surveillance of packaged materials when appropriate.

- Develop a prioritized plan for implementing the above criteria and requirements based on the hazards and risks posed by the existing packaging configurations and conditions.

Printed on recycled paper

I have assigned Mr. Richard Stark, Director, Office of Facilities Operations Support, as the Department's responsible manager for developing the Implementation Plan. He can be reached on (301) 903-4407.

Sincerely,

Samuel W. Bodman

[FR Doc. 05–10000 Filed 5–18–05; 8:45 am]

BILLING CODE 6450–01–C

DEPARTMENT OF ENERGY

Office of Energy Efficiency and Renewable Energy

Notice of Clarification to Energy Conservation Program for Consumer Products: Publication of the Petition for Waiver of Fujitsu General Limited from the DOE Residential Air Conditioner and Heat Pump Test Procedures (Case No. CAC–010)

AGENCY: Office of Energy Efficiency and Renewable Energy, Department of Energy.

ACTION: Notice of clarification.

FOR FURTHER INFORMATION CONTACT: Dr. Michael G. Raymond, U.S. Department of Energy, Building Technologies Program, Mail Stop EE–2J, Forrestal Building, 1000 Independence Avenue, SW., Washington, DC 20585–0121, (202) 586–9611; e-mail: *Michael.Raymond.ee.doe.gov;* or Francine Pinto, Esq., or Thomas DePriest, Esq., U.S. Department of Energy, Office of General Counsel, Mail Stop GC–72, Forrestal Building, 1000 Independence Avenue, SW., Washington, DC 20585–0103, (202) 586–9507; e-mail: *Francine.Pinto@hq.doe.gov,* or *Thomas.DePriest@hq.doe.gov.*

SUPPLEMENTARY INFORMATION:

Clarification

On February 4, 2005, the Department of Energy (Department or DOE) published a petition for waiver of Fujitsu General Limited from the DOE residential air conditioner and heat pump test procedures. (70 FR 5980) Subsequent to the publication of the waiver, DOE received two comments that identified an inadvertent error which has caused confusion.[1]

On page 5981, there is a discussion of applicable test procedures: ''On October 21, 2004, the Department published a direct final rule adopting ARI Standard 210/240–2003 for small commercial package air conditioning and heating equipment ≤ 65,000 Btu/h. (69 FR 61962) The test procedures in that direct final rule apply to three-phase products, but the Fujitsu product is single phase for both residential and commercial use. There is no prescribed test procedure for single-phase, small commercial packaged air conditioning and heating equipment, so no test procedure waiver is required for commercial Airstage products.'' The last sentence in the quotation is in error. The Fujitsu products are single-phase central air conditioners and heat pumps with capacities <thnsp;65,000 Btu/h, for both residential and commercial use. Such products are not ''small commercial package air conditioning and heating equipment,'' a subcategory of ''industrial equipment.'' They belong to the category ''central air conditioners and central air conditioning heat pumps,'' a subcategory of ''consumer products.''

The definition of ''consumer product'' in 42 U.S.C. 6291 is:

(1) The term ''consumer product'' means any article (other than an automobile * * *) of a type—

(A) which in operation consumes, or is designed to consume, energy * * *; and

(B) which, to any significant extent, is distributed in commerce for personal use or consumption by individuals; without regard to whether such article of such type is in fact distributed in commerce for personal use or consumption by an individual * * *.

Single-phase central air conditioners and heat pumps with capacities < 65,000Btu/h clearly meet criterion (A), regardless of whether they are for residential or commercial use. They also meet criterion (B). These products are distributed in commerce, to a very significant extent, for personal use or consumption by individuals. They are primarily for personal use or consumption by individuals. The second part of (B), above, means that even if particular units are distributed for commercial use, they are still consumer products, because single-phase central air conditioners and heat pumps with capacities < 65,000 Btu/h, are, to a significant extent, distributed in commerce for personal use or consumption by individuals.

In short, single phase equipment < 65,000 Btu/h, regardless of whether it is for residential or commercial use, is a consumer product.

In order to correct the Fujitsu petition for waiver itself, it is only necessary to strike the sentence ''There is no prescribed test procedure for single-phase, small commercial packaged air conditioning and heating equipment, so no test procedure waiver is required for commercial Airstage products.'' As stated in Fujitsu's petition, the correct test procedure for the products for which Fujitsu is seeking a waiver is the residential test procedure for central air conditioners contained in 10 CFR Part 430, Subpart B, Appendix M.

Issued in Washington, DC, on May 13, 2005.

David K. Garman,

Assistant Secretary, Energy Efficiency and Renewable Energy.

[FR Doc. 05–9998 Filed 5–18–05; 8:45 am]

BILLING CODE 6450–01–P

[1] DOE has placed these comments in the docket file for this rulemaking. They are available at the U.S. Department of Energy, Forrestal Building, Room 1J–018 (Resource Room of the Building Technologies Program), 1000 Independence Avenue, SW., Washington, DC, (202) 586–9127, between 9 a.m. and 4 p.m., Monday through Friday, except Federal holidays. Please call Ms. Brenda Edwards-Jones at the above telephone number for additional information regarding visiting the Resource Room.

DEPARTMENT OF ENERGY

Federal Energy Regulatory Commission

[Docket No. EL05–110–000, et al.]

Alliant Energy Generation, Inc., et al.; Electric Rate and Corporate Filings

May 12, 2005.

The following filings have been made with the Commission. The filings are listed in ascending order within each docket classification.

1. Alliant Energy Generation, Inc.; Sheboygan Power, LLC

[Docket No. EL05–110–000]

Take notice that on May 6, 2005, Alliant Energy Corporate Services, Inc., on behalf of Alliant Energy Generation, Inc. (AEG) and Sheboygan Power, LLC (SPLLC), submitted a petition to the Federal Energy Regulatory Commission requesting issuance of a declaratory order determining that AEG and SPLLC will not be ''public utilities,'' as the term ''public utility'' is defined in section 201(e) of the Federal Power Act, 16 U.S.C. 824(e), by virtue of AEG's ownership of SPLLC and SPLLC's passive ownership of limited FERC-jurisdictional generator interconnection facilities that will be under the exclusive control of another utility.

Comment Date: 5 p.m. Eastern Time on May 23, 2005.

2. LG&E Roanoke Valley L.P.; Westmoreland-Roanoke Valley, L.P.; Westmoreland-LG&E Partners

[Docket No. ER93–734–002]

Take notice that on May 6, 2005, LG&E Roanoke Valley L.P., Westmoreland-Roanoke Valley, L.P., and Westmoreland-LG&E Partners submitted a compliance filing pursuant to the Commission's Order issued April 6, 2005 in Docket No. ER93–734–001.

Comment Date: 5 p.m. Eastern Time on May 27, 2005.

3. Baconton Power LLC

[Docket No. ER00–2398–007]

Take notice that on May 6, 2005, Baconton Power LLC submitted a compliance filing pursuant to the Commission's letter order issued April 6, 2005 in Docket No. ER00–2398–006.

Comment Date: 5 p.m. Eastern Time on May 27, 2005.

4. EME Homer City Generation, L.P.

[Docket No. ER99–666–004]

Take notice that on May 6, 2005, EME Homer City Generation, L.P. (EME Homer City) submitted a compliance filing pursuant to the Commission's order issued April 14, 2005 in *Midwest Generation*, LLC, 111 FERC ¶ 61,034 (2005).

EME Homer City states that copies of this filing were served upon all persons on the service list.

Comment Date: 5 p.m. Eastern Time on May 27, 2005.

5. CP Power Sales Twelve, L.L.C.

[Docket No. ER99–893–009]

Take notice that on May 6, 2005, CP Power Sales Twelve, L.L.C. (CPS Twelve) submitted a compliance filing pursuant to the Commission's order issued April 14, 2005 in *Midwest Generation*, LLC, 111 FERC ¶ 61,034 (2005).

CPS Twelve states that copies of this filing were served upon all persons on the service list.

Comment Date: 5 p.m. Eastern Time on May 27, 2005.

6. Midwest Generation, LLC

[Docket No. ER99–3693–003]

Take notice that on May 6, 2005, Midwest Generation, LLC (MWGen) submitted a compliance filing pursuant to the Commission's order issued April 14, 2005 in *Midwest Generation*, LLC, 111 FERC ¶ 61,034 (2005).

MWGen states that copies of this filing were served upon all persons on the service list.

Comment Date: 5 p.m. Eastern Time on May 27, 2005.

7. CP Power Sales Nineteen, L.L.C.

[Docket No. ER99–4228–007]

Take notice that on May 6, 2005, CP Power Sales Nineteen, L.L.C. (CPS Nineteen) submitted a compliance filing pursuant to the Commission's order issued April 14, 2005 in *Midwest Generation*, LLC, 111 FERC ¶ 61,034 (2005).

CPS Nineteen states that copies of this filing were served upon all persons on the service list.

Comment Date: 5 p.m. Eastern Time on May 27, 2005.

8. CP Power Sales Seventeen, L.L.C.

[Docket No. ER99–4229–007]

Take notice that on May 6, 2005, CP Power Sales Seventeen, L.L.C. (CPS Seventeen) submitted a compliance filing pursuant to the Commission's order issued April 14, 2005 in *Midwest Generation*, LLC, 111 FERC ¶ 61,034 (2005).

CPS Seventeen states that copies of this filing were served upon all persons on the service list.

Comment Date: 5 p.m. Eastern Time on May 27, 2005.

9. CP Power Sales Twenty, L.L.C.

[Docket No. ER99–4231–006]

Take notice that on May 6, 2005, CP Power Sales Twenty, L.L.C. (CPS Twenty) submitted a compliance filing pursuant to the Commission's order issued April 14, 2005 in *Midwest Generation*, LLC, 111 FERC ¶ 61,034 (2005).

CPS Twenty states that copies of this filing were served upon all persons on the service list.

Comment Date: 5 p.m. Eastern Time on May 27, 2005.

10. American Ref-Fuel Company of Niagara, L.P.

[Docket No. ER01–1302–005]

Take notice that, on May 5, 2005, American Ref-Fuel Company of Niagara, L.P. (ARC-Niagara) submitted a compliance filing pursuant to the Commission's letter order issued April 14, 2005 in Docket No. ER01–1302–004.

ARC-Niagara states that copies of the filing were served upon the parties on the official service list in Docket No. ER01–1302–000.

Comment Date: 5 p.m. Eastern Time on May 26, 2005.

11. Backbone Mountain Windpower, LLC; Badger Windpower, LLC; Bayswater Peaking Facility, LLC; Blythe Energy, LLC; Calhoun Power Company I, LLC; Doswell Limited Partnership; ESI Vansycle Partners, L.P.; Florida Power & Light Co.; FPL Energy Cape, LLC; FPL Energy Hancock County Wind, LLC; FPL Energy Maine Hydro LLC; FPL Energy Marcus Hook, L.P.; FPL Energy Mason, LLC; FPL Energy MH 50, L.P.; FPL Energy New Mexico Wind, LLC; FPL Energy Pennsylvania Wind, LLC; FPL Energy Power Marketing, Inc.; FPL Energy Seabrook, LLC; FPL Energy Vansycle, L.L.C.; FPL Energy Wyman, LLC; FPL Energy Wyman IV, LLC; Gray County Wind Energy, LLC; Hawkeye Power Partners, LLC; High Winds, LLC; Jamaica Bay Peaking Facility, LLC; Lake Benton Power Partners II, LLC; Mill Run Windpower, LLC; Somerset Windpower, LLC; West Texas Wind Energy Partners, LP

[Docket Nos. ER02–2559–002, ER01–1071–003, ER02–669–004, ER02–2018–004, ER01–2074–003, ER90–80–002, ER98–2494–006, ER97–3359–006, ER00–3068–003, ER03–34–002, ER98–3511–007, ER02–1903–003, ER98–3562–007, ER99–2917–004, ER03–179–004, ER02–2166–003, ER98–3566–010, ER02–1838–003, ER01–838–003, ER98–3563–007, ER98–3564–007, ER01–1972–003, ER98–2076–006, ER03–155–003, ER03–623–003, ER98–4222–002, ER01–1710–003, ER01–2139–004, ER98–1965–003]

Take notice that on May 6, 2005, Backbone Mountain Windpower, LLC, Badger Windpower, LLC, Bayswater Peaking Facility, LLC, Blythe Energy, LLC, Calhoun Power Company I, LLC, Doswell Limited Partnership, ESI Vansycle Partners, L.P., Florida Power & Light Company, FPL Energy Cape, LLC, FPL Energy Hancock County Wind, LLC, FPL Energy Maine Hydro LLC, FPL Energy Marcus Hook, L.P., FPL Energy Mason, LLC, FPL Energy MH 50, L.P., FPL Energy New Mexico Wind, LLC, FPL Energy Pennsylvania Wind, LLC, FPL Energy Power Marketing, Inc., FPL Energy Rhode Island Energy, L.P., FPL Energy Seabrook, LLC, FPL Energy Vansycle, L.L.C., FPL Energy Wyman, LLC, FPL Energy Wyman IV, LLC, Gray County Wind Energy, LLC, Hawkeye Power Partners, LLC, High Winds, LLC, Jamaica Bay Peaking Facility, LLC, Lake Benton Power Partners II, LLC, Mill Run Windpower, LLC, Somerset Windpower, LLC, and West Texas Wind Energy Partners, LP (collectively, Applicants), submitted their response to the Commission's deficiency letter issued April 12, 2005.

Applicants state that copies of the filing were served on parties on the official service list in the above-captioned proceedings, the Florida Public Service Commission and the New Hampshire Public Utilities Commission.

Comment Date: 5 p.m. Eastern Time on May 18, 2005.

12. Midwest Generation Energy Services, LLC

[Docket No. ER03–30–002]

Take notice that on May 6, 2005, Midwest Generation Energy Services, LLC (MGES) submitted a compliance filing pursuant to the Commission's order issued April 14, 2005 in *Midwest Generation, LLC*, 111 FERC ¶ 61,034 (2005).

MGES states that copies of this filing were served upon all persons on the service list.

Comment Date: 5 p.m. Eastern Time on May 27, 2005.

13. Midwest Independent Transmission System Operator, Inc.; Midwest Independent Transmission System Operator, Inc.; Midwest Independent Transmission System Operator, Inc.; Ameren Services Co., et al.

[Docket Nos. ER05–6–022, EL04–135–024, EL02–111–042, EL03–212–038]

Take notice that on May 4, 2005 as amended on May 5, 2005, the Midwest Independent Transmission System Operator, Inc. (Midwest ISO) and the Midwest ISO Transmission Owners jointly submitted for filing a compliance filing revising the Midwest ISO Open Access Transmission and Energy Markets Tariff pursuant to the Commission's November 18, 2004 Order in Docket Nos. ER05–6, EL04–135, EL02–111, and EL03–212, *Midwest Indep. Transmission Sys. Operator, Inc.*, 109 FERC ¶ 61,168 (2004).

Midwest ISO states that copies of the filing were served on parties on the official service list in the above-captioned proceedings.

Comment Date: 5 p.m. Eastern Time on May 26, 2005.

14. TransCanada Power (Castleton) LLC

[Docket No. ER05–723–001]

Take notice that on May 9, 2005, TransCanada Power (Castleton) LLC (TCP Castleton) filed with the Commission an amendment to its March 23, 2005 application requesting that the Commission accept for filing a market-based tariff for TCP Castleton, and otherwise grant TCP Castleton the authority to sell energy and capacity and ancillary services in wholesale transactions at negotiated, market-based rates pursuant to part 35 of the Commission's regulations.

Comment Date: 5 p.m. Eastern Time on May 19, 2005.

15. Northeast Utilities Service Company

[Docket No. ER05–827–001]

Take notice that on May 4, 2005, Northeast Utilities Service Company (NUSCO), on behalf of its operating company affiliates, The Connecticut Light and Power Company (CL&P), Western Massachusetts Electric Company (WMECO), Holyoke Water Power Company (HWP), Holyoke Power and Electric Company (HP&E), and Public Service Company of New Hampshire (PSNH), submitted an amendment to its April 15, 2005 filing in Docket No. ER05–827–000 to include a Notice of Cancellation of Holyoke Power and Electric Company FERC Electric Rate Schedule No. 13 reflecting the termination of the Memorandum of Understanding—Pooling of Generation and Transmission (NUG&T) between CL&P, WMECO, HWP, and HP&E. NUSCO requests an effective date of May 1, 2001.

NUSCO states that copies of the filing were served upon the NUSCO's jurisdictional customers, Connecticut Department of Public Utility Control, New Hampshire Public Utilities Commission, and Massachusetts Department of Telecommunications and Energy.

Comment Date: 5 p.m. Eastern Time on May 25, 2005.

16. Western Electricity Coordinating Council

[Docket No. ER05–907–001]

Take notice that on May 4, 2005, the Western Electricity Coordinating Council (WECC) filed supplemental information to its April 29, 2005 filing of the Fifth Amendment to the Reliability Criteria Agreement under the WECC's Reliability Management System. The WECC requests an effective date of May 1, 2005.

Comment Date: 5 p.m. Eastern Time on May 25, 2005.

17. Southern Company Services, Inc.

[Docket No. ER05–938–000]

Take notice that on May 5, 2005 Southern Company Services, Inc., acting as agent for Alabama Power Company, Georgia Power Company, Gulf Power Company, Mississippi Power Company and Savannah Electric and Power Company (collectively Southern Companies), submitted for filing Revision No. 4 to the Agreement for Network Integration Transmission Service for Alabama Electric Cooperative, Inc. under the Open Access Transmission Tariff of Southern Companies to add/amend several delivery points and network power purchases.

Comment Date: 5 p.m. Eastern Time on May 26, 2005.

18. Vesta Trading LP

[Docket No. ER05–939–000]

Take notice that on May 5, 2005, Vesta Trading LP (Vesta) petitioned the Commission for acceptance of Vesta's FERC Electric Tariff Original Volume No. 1; the granting of certain blanket approvals, including the authority to sell electricity at market-based rates; and the waiver of certain Commission regulations. Vesta states that it intends to engage in wholesale electric power and energy purchases and sales as a marketer. Vesta further states that it is not in the business of generating or transmitting electric power.

Comment Date: 5 p.m. Eastern Time on May 26, 2005.

19. Vesta Capital Partners LP

[Docket No. ER05–940–000]

Take notice that on May 5, 2005, Vesta Capital Partners LP (Vesta Capital) petitioned the Commission for acceptance of Vesta Capital's FERC Electric Tariff Original Volume No. 1; the granting of certain blanket approvals, including the authority to sell electricity at market-based rates; and the waiver of certain Commission regulations. Vesta Capital states that it intends to engage in wholesale electric power and energy purchases and sales as a marketer. Vesta Capital further states that it is not in the business of generating or transmitting electric power.

Comment Date: 5 p.m. Eastern Time on May 26, 2005.

20. New York Independent System Operator, Inc.

[Docket No. ER05–941–000]

Take notice that on May 5, 2005, the New York Independent System Operator, Inc. (NYISO) filed proposed revisions to the NYISO's Open Access Transmission Tariff (OATT) and Market Administration and Control Area Services Tariff (Services Tariff). NYISO states that the proposed filing would amend the NYISO's creditworthiness requirements to allow an additional form of collateral and reduce the amount of collateral required in the Virtual Bidding Market. Specifically, the NYISO indicates that it proposes to (1) allow netting of amounts receivable as an acceptable form of collateral in the Virtual Bidding Market and (2) reduce the collateral requirement necessary to participate in the Virtual Bidding market from seven days to four days. The NYISO requests an effective date of July 5, 2005.

The NYISO states that it has served a copy of this filing to all parties that have executed Service Agreements under the NYISO's OATT or Services Tariff. NYISO also states that the copies of this filing are being served on all of the parties in the Docket Nos. ER01–3009–000, ER01–3153–000 & EL00–90–000.

Comment Date: 5 p.m. Eastern Time on May 26, 2005.

21. Pacific Gas and Electric Company

[Docket No. ER05–942–000]

Take notice that on May 6, 2005, Pacific Gas and Electric Company (PG&E) tendered for filing a Generator Special Facilities Agreement and a Generator Interconnection Agreement between PG&E and Soledad Energy LLC (Soledad).

PG&E and GSFA state that electronic copies of this filing have been served upon Soledad, the California Independent System Operator Corporation and the California Public Utilities Commission.

Comment Date: 5 p.m. Eastern Time on May 27, 2005.

22. New England Power Company; USGen New England, Inc.

[Docket No. ER05–950–000]

Take notice that on May 6, 2005, New England Power Company (NEP) and USGen New England, Inc. (USGenNE) (collectively, Applicants), submitted Notices of Cancellation of the Amended and Restated Continuing Site/Interconnection Agreement by and between NEP and USGenNE filed with the Commission and accepted for filing in Docket No. ER98–6–000 and EC98–1–000 on February 25, 1998 and amended and filed with the Commission on December 16, 2004 in Docket No. ER05–347–000 (the CSIA). Applicants state that the CSIA is designated as NEP's First Revised Rate Schedule FERC No. 488 and as USGenNE's Rate Schedule FERC No. 1. Applicants further state that the CSIA terminated, consistent with its terms, as of April 1, 2005. The Applicants propose an effective date of April 1, 2005 for the Notices of Cancellation.

Applicants state that the notices of the proposed cancellation have been served on NEP and USGenNE.

Comment Date: 5 p.m. Eastern Time on May 27, 2005.

23. Northern Maine Independent System Administrator, Inc.

[Docket No. ER05–951–000]

Take notice that on May 6, 2005, Northern Maine Independent System Administrator, Inc. (NMISA) submitted Service Agreement No. 12 between NMISA and UPC Wind Power, LLC (UPC) under NMISA's FERC Electric Tariff Original Volume No. 1. NMISA requests an effective date of April 27, 2005.

NMISA states that a copy of the filing was served upon UPC.

Comment Date: 5 p.m. Eastern Time on May 27, 2005.

Standard Paragraph

Any person desiring to intervene or to protest this filing must file in accordance with Rules 211 and 214 of the Commission's Rules of Practice and Procedure (18 CFR 385.211 and 385.214). Protests will be considered by the Commission in determining the appropriate action to be taken, but will not serve to make protestants parties to the proceeding. Any person wishing to become a party must file a notice of intervention or motion to intervene, as appropriate. Such notices, motions, or protests must be filed on or before the comment date. Anyone filing a motion to intervene or protest must serve a copy of that document on the Applicant and all parties to this proceeding.

The Commission encourages electronic submission of protests and interventions in lieu of paper using the ''eFiling'' link at *http://www.ferc.gov*. Persons unable to file electronically should submit an original and 14 copies of the protest or intervention to the Federal Energy Regulatory Commission, 888 First Street, NE., Washington, DC 20426.

This filing is accessible on-line at *http://www.ferc.gov*, using the ''eLibrary'' link and is available for review in the Commission's Public Reference Room in Washington, DC. There is an ''eSubscription'' link on the Web site that enables subscribers to receive email notification when a document is added to a subscribed docket(s). For assistance with any FERC Online service, please email *FERCOnlineSupport@ferc.gov*, or call (866) 208–3676 (toll free). For TTY, call (202) 502–8659.

Linda Mitry,

Deputy Secretary.

[FR Doc. E5–2521 Filed 5–18–05; 8:45 am]

BILLING CODE 6717–01–P

ENVIRONMENTAL PROTECTION AGENCY

[OECA–2004–0041; FRL–7914–7]

Agency Information Collection Activities; Submission for OMB Review and Approval; Comment Request; NESHAP for Engine Test Cells/Stands (Renewal), ICR Number 2066.03, OMB Control Number 2060–0483

AGENCY: Environmental Protection Agency (EPA).

ACTION: Notice.

SUMMARY: In compliance with the Paperwork Reduction Act, this document announces that an Information Collection Request (ICR) has been forwarded to the Office of Management and Budget (OMB) for review and approval. This is a request to renew an existing approved collection. This ICR is scheduled to expire on July 31, 2005. Under OMB regulations, the Agency may continue to conduct or sponsor the collection of information while this submission is pending at OMB. This ICR describes the nature of the information collection and its estimated burden and cost.

DATES: Additional comments may be submitted on or before June 20, 2005.

ADDRESSES: Submit your comments, referencing docket ID number OECA–2004–0041, to (1) EPA online using EDOCKET (our preferred method), by e-mail to *docket.oeca@epa.gov,* or by mail to: EPA Docket Center, Environmental Protection Agency, Enforcement and Compliance Docket and Information Center, Mail Code 2201T, 1200 Pennsylvania Avenue, NW., Washington, DC 20460, and (2) OMB at: Office of Information and Regulatory Affairs, Office of Management and Budget (OMB), Attention: Desk Officer for EPA, 725 17th Street, NW., Washington, DC 20503.

FOR FURTHER INFORMATION CONTACT: Learia Williams, Compliance Assessment and Media Programs Division, Office of Compliance, Mail Code 2223A, Environmental Protection Agency, 1200 Pennsylvania Avenue, NW., Washington, DC 20460; telephone number: (202) 564–4113; fax number: (202) 564–0050; e-mail address: *williams.learia@epa.gov.*

SUPPLEMENTARY INFORMATION: EPA has submitted the following ICR to OMB for review and approval according to the procedures prescribed in 5 CFR 1320.12. On December 1, 2004 (69 FR 69909), EPA sought comments on this ICR pursuant to 5 CFR 1320.8(d). EPA received no comments.

EPA has established a public docket for this ICR under Docket ID No. OECA–2004–0041, which is available for public viewing at the Enforcement and Compliance Docket and Information Center in the EPA Docket Center (EPA/DC), EPA West, Room B102, 1301 Constitution Ave., NW., Washington, DC. The EPA Docket Center Public Reading Room is open from 8:30 a.m. to 4:30 p.m., Monday through Friday, excluding legal holidays. The telephone number for the Reading Room is (202) 566–1744, and the telephone number for the Enforcement and Compliance Docket and Information Center Docket is: (202) 566–1752. An electronic version of the public docket is available through EPA Dockets (EDOCKET) at *http://www.epa.gov/edocket.* Use EDOCKET to submit or view public comments, access the index listing of the contents of the public docket, or access those documents in the public docket that are available electronically. When in the system, select ''search,'' then key in the docket ID number identified above.

Any comments related to this ICR should be submitted to EPA and OMB within 30 days of this notice. EPA's policy is that public comments, whether submitted electronically or in paper, will be made available for public viewing in EDOCKET as EPA receives them and without change, unless the comment contains copyrighted material, Confidential Business Information (CBI), or other information whose public disclosure is restricted by statute. When EPA identifies a comment containing copyrighted material, EPA will provide a reference to that material in the version of the comment that is placed in EDOCKET. The entire printed comment, including the copyrighted material, will be available in the public docket. Although identified as an item in the official docket, information claimed as CBI, or whose disclosure is otherwise restricted by statute, is not included in the official public docket, and will not be available for public viewing in EDOCKET. For further information about the electronic docket, see EPA's **Federal Register** notice describing the electronic docket at 67 FR 38102 (May 31, 2002), or go to *http://www.epa.gov/edocket.*

Title: NESHAP for Engine Test Cells/Stands (Renewal).

Abstract: The National Emission Standards for Hazardous Air Pollutants (NESHAP), for Engine Test Cells/Stands were proposed on May 14, 2002 (67 FR 34547), and promulgated on May 27, 2003 (68 FR 28785). These standards apply to any existing, reconstructed, or new affected sources. An affected source is the collection of all equipment and activities associated with engine test cells/stands used for testing uninstalled stationary or uninstalled mobile engines. Respondents of affected sources are subject to the requirements of 40 CFR part 63, subpart A, the General Provisions, unless the regulation specifies otherwise.

Owners and operators must submit an initial notification reports upon the construction, or reconstruction of any engine test cells/stands used for testing internal combustion engines. The respondents are required to submit a semiannual compliance report. If there were no deviations from the emission limitation and the continuous emission monitoring system (CEMS) was operating correctly, the semiannual report must contain a statement that no deviation occurred. If a deviation occurred from an emission limit, the report must contain detailed information of the nature of the deviation(s). Performance test reports are the Agency's records of a source's initial capability to comply with the emission standards, and serve as a record of the operating conditions under which compliance was achieved. The information generated by monitoring, recordkeeping and reporting requirements described in this ICR is used by the Agency to ensure that facilities affected by the standard continue to operate the control equipment and achieve continuous compliance with the regulation. In the event that there is no delegated state or local authority, the reports are sent directly to the EPA Regional Office.

An agency may not conduct or sponsor, and a person is not required to respond to, a collection of information unless it displays a currently valid OMB Control Number. The OMB Control Numbers for EPA's regulations are listed in 40 CFR part 9 and 48 CFR chapter 15, and are identified on the form and/or instrument, if applicable.

Burden Statement: The annual public reporting and recordkeeping burden for this collection of information are estimated to average 76 hours per response. Burden means the total time, effort, or financial resources expended by persons to generate, maintain, retain, or disclose or provide information to or for a Federal agency. This includes the time needed to review instructions; develop, acquire, install, and utilize technology and systems for the purposes of collecting, validating, and verifying information, processing and maintaining information, and disclosing and providing information; adjust the existing ways to comply with any previously applicable instructions and

requirements; train personnel to be able to respond to a collection of information; search data sources; complete and review the collection of information; and transmit or otherwise disclose the information.

Respondents/Affected Entities: Owners or operators of engine test cells/stands.

Estimated Number of Respondents: 18.

Frequency of Response: Initially, semiannually, and annually.

Estimated Total Annual Hour Burden: 3,043 hours.

Estimated Total Annual Costs: $248,264, which includes $0 annualized Capital/Startup costs, $5,400 annual O&M costs, and $242,864 Respondent Labor costs.

Changes in the Estimates: There is an increase of 203 hours in the total estimated burden currently identified in the OMB Inventory of Approved ICR Burdens. The rule requires that all sources will conduct a performance evaluation and monitoring demonstration once every five years. Because of this ruling, the first six sources in the active ICR will be required to conduct this test on the third year of this renewal. Since the annualized burden for initial evaluation and demonstration is computed by averaging over the 3 year period of the ICR, we have also averaged the additional six update sources to reflect two additional sources per year for the 5-year update.

Dated: May 5, 2005.

Oscar Morales,

Director, Collection Strategies Division.

[FR Doc. 05–10012 Filed 5–18–05; 8:45 am]

BILLING CODE 6560–50–P

ENVIRONMENTAL PROTECTION AGENCY

[OAR–2005–0037, FRL–7914–8]

Agency Information Collection Activities Submission to OMB for Review and Approval; Comment Request; Recordkeeping and Periodic Reporting of the Production, Import, Recycling, Transshipment and Feedstock Use of Ozone Depleting Substances (Critical Use Exemption) (Renewal) EPA ICR Number 2179.02, OMB Control Number 2060–0564

AGENCY: Environmental Protection Agency (EPA).

ACTION: Notice.

SUMMARY: In compliance with the Paperwork Reduction Act (44 U.S.C. 3501 *et seq.*), this document announces that an Information Collection Request (ICR) has been forwarded to the Office of Management and Budget (OMB) for review and approval. This is a request to renew and existing approved collection. This ICR describes the nature of the information collection and its estimated burden and cost.

DATES: Additional comments may be submitted on or before June 20, 2005.

ADDRESSES: Submit your comments, referencing docket ID number OAR–2005–0037, to (1) EPA online using EDOCKET (our preferred method), by email to a-and-r-Docket@epa.gov, or by mail to: Environmental Protection Agency, EPA Docket Center (EPA/DC), Air and Radiation Docket and Information Center, 1200 Pennsylvania Avene, NW., Mail Code 6102T, Washington, DC 20460 and (2) OMB at: Office of Information and Regulatory Affairs, Office of Management and Budget (OMB), Attention: Desk Officer for EPA, 725 17th Street, NW., Washington, DC 20503.

FOR FURTHER INFORMATION CONTACT: Hodayah Finman, Office of Air and Radiation (6205J), Environmental Protection Agency, 1200 Pennsylvania Avenue, NW., Washington, DC 20460; telephone number: (202) 343–9246; fax number: (202) 343–2338; E-mail address: *finman.hodayah@epa.gov.*

SUPPLEMENTARY INFORMATION: EPA has submitted the following ICR to OMB for review and approval according to the procedures prescribed in 5 CFR 1320.12. On August 25, 2004 (69 *FR* 52366), EPA sought comments on this ICR pursuant to 5 CFR 1320.8(d). EPA has addressed the comments received.

EPA has established a public docket for this ICR under Docket ID number OAR–2005–0037, which is available for public viewing at the Air and Radiation Docket and Information Center in the EPA Docket Center (EPA/DC), EPA West, Room B102, 1301 Constitution Avenue, NW., Washington, DC. The EPA Docket Center Public Reading Room is open from 8:30 a.m. to 4:30 p.m., Monday through Friday, excluding legal holidays. The telephone number for the Reading Room is (202) 566–1744, and the telephone number for the Air and Radiation Docket and Information Center is (202) 566–1742 . An electronic version of the public docket is available through EPA Dockets (EDOCKET) at *http://www.epa.gov/edocket.* Use EDOCKET to obtain a copy of the draft collection of information, submit or view public comments, access the index listing of the contents of the public docket, and to access those documents in the public docket that are available electronically. Once in the system, select ''search,'' then key in the docket ID number identified above.

Any comments related to this ICR should be submitted to EPA and OMB within 30 days of this notice. EPA's policy is that public comments, whether submitted electronically or in paper, will be made available for public viewing in EDOCKET as EPA receives them and without change, unless the comment contains copyrighted material, confidential business information (CBI), or other information whose public disclosure is restricted by statute. When EPA identifies a comment containing copyrighted material, EPA will provide a reference to that material in the version of the comment that is placed in EDOCKET. The entire printed comment, including the copyrighted material, will be available in the public docket. Although identified as an item in the official docket, information claimed as CBI, or whose disclosure is otherwise restricted by statute, is not included in the official public docket, and will not be available for public viewing in EDOCKET. For further information about the electronic docket, see EPA's **Federal Register** notice describing the electronic docket at 67 *FR* 38102 (May 31, 2002), or go to *http://www.epa.gov./edocket.*

Title: Recordkeeping and Periodic Reporting of the Production, Import, Recycling, Transshipment and Feedstock Use of Ozone Depleting Substances (Critical Use Exemption) (Renewal)

Abstract: With this Information Collection Request (ICR), the Office of Air and Radiation (OAR) is seeking permission to require the submission of data from regulated industries to the Environmental Protection Agency and to require recordkeeping of key documents to ensure compliance with the Montreal Protocol on Substances that Deplete the Ozone Layer (Protocol) and the Clean Air Act under the critical use exemption program (CUE).

Entities applied to EPA for a critical use exemption that would allow for the continued production and import of methyl bromide after the phaseout in January 2005. EPA used the data submitted by users of methyl bromide to create a nomination of critical uses that was submitted to the Montreal Protocol's Ozone Secretariat for review by an international panel of experts. The uses authorized internationally by the Parties to the Protocol have been made available in the U.S. through a regulatory action completed by EPA on December 23, 2004. This ICR seeks to characterize the burden associated with producing, importing, distributing, and using critically exempted methyl

bromide as described in the final rule at 40 CFR part 82.

A proposed rule seeking comment and a final rule implementing the deregulatory action associated with the reporting and recordkeeping requirements outlined in this document were published in the **Federal Register** on August 25, 2004 (69 FR 52366) and on December 23, 2004 (69 **FR** 76982) respectively. However, the Agency mistakenly did not have an ICR approved by OMB during the development of the rulemaking and is seeking OMB approval for the burden hours associated with the prior rulemaking this time. Although the Agency published the ICR information with the proposed rule and received and reconciled comments on the burden of the rulemaking, the appropriate paperwork had not been resubmitted to OMB for their consideration with the final rule and therefore the Agency is now seeking approval for burden associated with the CUE requirements. At the present time, an emergency ICR #2179.01, is in place to facilitate the recordkeeping and reporting requirements added to 40 CFR part 82 by the final CUE rule (69 **FR** 76982).

This information collection is authorized under section 604(d)(6) of the Clean Air Act Amendments of 1990, added by section 764 of the 1999 Omnibus Consolidated and Emergency Supplemental Appropriations Act (Pub. L. No. 105–277; October 21, 1998).

EPA drew upon experience implementing similar regulations among the same entities in order to derive estimates of the burden associated with the reporting and recordkeeping requirements.

An agency may not conduct or sponsor, and a person is not required to respond to, a collection of information unless it displays a currently valid OMB control number. The OMB control numbers for EPA's regulations in 40 CFR are listed in 40 CFR part 9 and are identified on the form and/or instrument, if applicable.

Burden Statement: The annual public reporting and recordkeeping burden for this collection of information is estimated to average 0.49 hours per response (1,371 hours divided by 2,802 responses). Burden means the total time, effort, or financial resources expended by persons to generate, maintain, retain, or disclose or provide information to or for a Federal agency. This includes the time needed to review instructions; develop, acquire, install, and utilize technology and systems for the purposes of collecting, validating, and verifying information, processing and maintaining information, and disclosing and providing information; adjust the existing ways to comply with any previously applicable instructions and requirements; train personnel to be able to respond to a collection of information; search data sources; complete and review the collection of information; and transmit or otherwise disclose the information.

Respondents/Affected Entities: Entities potentially affected by this action are producers, importers, distributors, and custom applicators of methyl bromide as well as users of methyl bromide who are farmers of minor vegetable crops and companies that store agricultural commodities.

Estimated Number of Respondents: 2054.

Frequency of Response: On occasion, quarterly, annually.

Estimated Total Annual Hour Burden: 1,371.

Estimated Total Annual Cost: $154,602, which includes $0 annualized capital/startup costs, $0 annual O&M costs, and $154,602 annual labor costs.

Changes in the Estimates: There is a increase of 577 hours in the total estimated burden currently identified in the OMB Inventory of Approved ICR Burdens. This increase is due to changes in the regulatory program which allows for exemptions to the phaseout of methyl bromide under certain circumstances which must be reported to EPA.

Dated: May 11, 2005.

Richard T. Westlund,

Acting Director, Collection Strategies Division.

[FR Doc. 05–10014 Filed 5–18–05; 8:45 am]

BILLING CODE 6560–50–P

EQUAL EMPLOYMENT OPPORTUNITY COMMISSION

Sunshine Act Meeting

AGENCY: Equal Employment Opportunity Commission.

"FEDERAL REGISTER CITATIONS OF PREVIOUS ANNOUNCEMENT:" 70 FR 24413, May 9, 2005.

PREVIOUSLY ANNOUNCED TIME AND DATE OF MEETING: 2 p.m. (Eastern Time) Monday, May 16, 2005.

CHANGE IN THE MEETING: The meeting has been cancelled.

FOR FURTHER INFORMATION: Stephen Llewellyn, Acting Executive Officer on (202) 663–4070.

Dated: May 16, 2005.

Stephen Llewellyn,

Acting Executive Officer.

[FR Doc. 05–10159 Filed 5–17–05; 3:25 pm]

BILLING CODE 6750–06–M

FEDERAL ACCOUNTING STANDARDS ADVISORY BOARD

Notice of Meetings for 2006

Board Action: Pursuant to 31 U.S.C. 3511(d), the Federal Advisory Committee Act (Pub. L. 92–463), as amended, and the FASAB Rules Of Procedure, as amended in April, 2004, notice is hereby given that the Federal Accounting Standards Advisory Board (FASAB) will meet on the following dates in room 7C13 of the U.S. Government Accountability Office (GAO) Building (441 G Street, NW.:) unless otherwise noted;

—Wednesday and Thursday, January 11 and 12, 2006.
—Wednesday and Thursday, Mar 29 and 30, 2006.
—Wednesday and Thursday, May 24 and 25, 2006.
—Wednesday and Thursday, July 26 and 27, 2006.
—Wednesday and Thursday, September 27 and 28, 2006.
—Wednesday and Thursday, November 15 and 16, 2006.

The purposes of the meetings are to discuss issues related to:

—FASAB'S Conceptual framework,
—Stewardship Reporting,
—Social Insurance,
—Natural Resources,
—Inter-entity Costs,
—Fiduciary Activities,
—Technical Agenda, and
—Any other topics as needed.

A more detailed agenda can be obtained from the FASAB Web site (*http://www.fasab.gov*) one week prior to each meeting.

Any interested person may attend the meetings as an observer. Board discussion and reviews are open to the public. GAO Building security requires advance notice of your attendance. Please notify FASAB of your planned attendance by calling (202) 512–7350 at least one day prior to the respective meeting.

FASAB also announces the cancellation of its Board meeting scheduled for Wednesday and Thursday, December 7 and 8, 2005.

FOR FURTHER INFORMATION CONTACT: Wendy M. Comes, Executive Director, 441 G St., NW., Mail Stop 6K17V, Washington, DC 20548, or call (202) 512–7350.

Authority: Federal Advisory committee Act. Pub. L. 92–463.

Dated: May 16, 2005.

Charles Jackson,

Federal Register Liaison Officer.

[FR Doc. 05–9971 Filed 5–18–05; 8:45 am]

BILLING CODE 1610–01–M

FEDERAL RESERVE SYSTEM

Change in Bank Control Notices; Acquisition of Shares of Bank or Bank Holding Companies

The notificants listed below have applied under the Change in Bank Control Act (12 U.S.C. 1817(j)) and § 225.41 of the Board's Regulation Y (12 CFR 225.41) to acquire a bank or bank holding company. The factors that are considered in acting on the notices are set forth in paragraph 7 of the Act (12 U.S.C. 1817(j)(7)).

The notices are available for immediate inspection at the Federal Reserve Bank indicated. The notices also will be available for inspection at the office of the Board of Governors. Interested persons may express their views in writing to the Reserve Bank indicated for that notice or to the offices of the Board of Governors. Comments must be received not later than June 2, 2005.

A. Federal Reserve Bank of Atlanta (Andre Anderson, Vice President) 1000 Peachtree Street, N.E., Atlanta, Georgia 30303:

1. Allen Tabor Tomlinson, Carrie Tomlinson Weeks, Robert Sanders Tomlinson, Jr., and Marie Joy Poulet Tomlinson, all of Opelousas, Louisiana; to acquire additional voting shares of St. Landry Bancshares, Inc., Opelousas, Louisiana, and thereby indirectly acquire voting shares of St. Landry Bank & Trust Company, St. Landry, Louisiana.

Board of Governors of the Federal Reserve System, May 13, 2005.

Robert deV. Frierson,

Deputy Secretary of the Board.

[FR Doc. 05–9950 Filed 5–18–05; 8:45 am]

BILLING CODE 6210–01–S

FEDERAL RESERVE SYSTEM

Formations of, Acquisitions by, and Mergers of Bank Holding Companies

The companies listed in this notice have applied to the Board for approval, pursuant to the Bank Holding Company Act of 1956 (12 U.S.C. 1841 *et seq.*) (BHC Act), Regulation Y (12 CFR Part 225), and all other applicable statutes and regulations to become a bank holding company and/or to acquire the assets or the ownership of, control of, or the power to vote shares of a bank or bank holding company and all of the banks and nonbanking companies owned by the bank holding company, including the companies listed below.

The applications listed below, as well as other related filings required by the Board, are available for immediate inspection at the Federal Reserve Bank indicated. The application also will be available for inspection at the offices of the Board of Governors. Interested persons may express their views in writing on the standards enumerated in the BHC Act (12 U.S.C. 1842(c)). If the proposal also involves the acquisition of a nonbanking company, the review also includes whether the acquisition of the nonbanking company complies with the standards in section 4 of the BHC Act (12 U.S.C. 1843). Unless otherwise noted, nonbanking activities will be conducted throughout the United States. Additional information on all bank holding companies may be obtained from the National Information Center website at *www.ffiec.gov/nic/*.

Unless otherwise noted, comments regarding each of these applications must be received at the Reserve Bank indicated or the offices of the Board of Governors not later than June 13, 2005.

A. Federal Reserve Bank of Atlanta (Andre Anderson, Vice President) 1000 Peachtree Street, N.E., Atlanta, Georgia 30303:

1. Tombigbee Bancshares, Inc., Sweet Water, Alabama; to become a bank holding company by acquiring 100 percent of the voting shares of Sweet Water State Bank, Sweet Water, Alabama.

B. Federal Reserve Bank of Chicago (Patrick M. Wilder, Assistant Vice President) 230 South LaSalle Street, Chicago, Illinois 60690-1414:

1. First Busey Corporation, Urbana, Illinois; to acquire 100 percent of the voting shares of Tarpon Coast Bancorp, Inc., Port Charlotte, Florida, and thereby indirectly acquire Tarpon Coast National Bank, Port Charlotte, Florida.

2. North Star Financial Holdings, Inc., Bloomfield, Michigan; to become a bank holding company by acquiring 100 percent of the voting shares of N Star Community Bank (in organization), Bingham Farms, Michigan.

Board of Governors of the Federal Reserve System, May 13, 2005.

Robert deV. Frierson,

Deputy Secretary of the Board.

[FR Doc. 05–9949 Filed 5–18–05; 8:45 am]

BILLING CODE 6210–01–S

FEDERAL RESERVE SYSTEM

Notice of Proposals to Engage in Permissible Nonbanking Activities or to Acquire Companies that are Engaged in Permissible Nonbanking Activities

The companies listed in this notice have given notice under section 4 of the Bank Holding Company Act (12 U.S.C. 1843) (BHC Act) and Regulation Y (12 CFR Part 225) to engage *de novo*, or to acquire or control voting securities or assets of a company, including the companies listed below, that engages either directly or through a subsidiary or other company, in a nonbanking activity that is listed in § 225.28 of Regulation Y (12 CFR 225.28) or that the Board has determined by Order to be closely related to banking and permissible for bank holding companies. Unless otherwise noted, these activities will be conducted throughout the United States.

Each notice is available for inspection at the Federal Reserve Bank indicated. The notice also will be available for inspection at the offices of the Board of Governors. Interested persons may express their views in writing on the question whether the proposal complies with the standards of section 4 of the BHC Act. Additional information on all bank holding companies may be obtained from the National Information Center website at *www.ffiec.gov/nic/*.

Unless otherwise noted, comments regarding the applications must be received at the Reserve Bank indicated or the offices of the Board of Governors not later than June 2, 2005.

A. Federal Reserve Bank of New York (Jay Bernstein, Bank Supervision Officer) 33 Liberty Street, New York, New York 10045-0001:

1. NSB Holding Corp., Staten Island, New York; to engage *de novo* through its subsidiary Check Depot, State Island, New York, in the issuance of money orders, pursuant to section 225.28(b)(13) of Regulation Y.

Board of Governors of the Federal Reserve System, May 13, 2005.

Robert deV. Frierson,

Deputy Secretary of the Board.

[FR Doc. 05–9951 Filed 5–18–05; 8:45 am]

BILLING CODE 6210–01–S

FEDERAL TRADE COMMISSION

Agency Information Collection Activities; Proposed Collection; Comment Request; Extension

AGENCY: Federal Trade Commission (''Commission'' or ''FTC'').

ACTION: Notice.

SUMMARY: The information collection requirements described below will be submitted to the Office of Management and Budget (''OMB'') for review, as required by the Paperwork Reduction Act (''PRA'') (44 U.S.C. 3501–3520). The FTC is seeking public comments on its proposal to extend through August 31, 2008, the current Paperwork Reduction Act clearances for information collection requirements contained in four Commission rules and one clearance covering the Commission's administrative activities. Those clearances expire on August 31, 2005.

DATES: Comments must be submitted on or before July 18, 2005.

ADDRESSES: Interested parties are invited to submit written comments. Comments should refer to ''Paperwork Comment: FTC File No. P822108'' to facilitate the organization of comments. A comment filed in paper form should include this reference both in the text and on the envelope and should be mailed or delivered to the following address: Federal Trade Commission/ Office of the Secretary, Room H–159 (Annex J), 600 Pennsylvania Avenue, NW., Washington, DC 20580. The FTC is requesting that any comment filed in paper form be sent by courier or overnight service, if possible, because U.S. postal mail in the Washington area and at the Commission is subject to delay due to heightened security precautions. Alternatively, comments may be filed in electronic form (in ASCII format, WordPerfect, or Microsoft Word) as part of or as an attachment to e-mail messages directed to the following e-mail box: *PaperworkComment@ftc.gov.* If the comment contains any material for which confidential treatment is requested, it must be filed in paper form, and the first page of the document must be clearly labeled ''Confidential.''[1]

The FTC Act and other laws the Commission administers permit the collection of public comments to consider and use in this proceeding as appropriate. All timely and responsive public comments will be considered by the Commission and will be available to the public on the FTC Web site, to the extent practicable, at *http://www.ftc.gov.* As a matter of discretion, the FTC makes every effort to remove home contact information for individuals from the public comments it receives before placing those comments on the FTC Web site. More information, including routine uses permitted by the Privacy Act, may be found in the FTC's privacy policy at *http://www.ftc.gov/ftc/privacy.htm.*

FOR FURTHER INFORMATION CONTACT: Requests for additional information or copies of the proposed information requirements should be addressed as follows:

For the Negative Option Rule, contact Edwin Rodriguez, Attorney, Division of Enforcement, Bureau of Consumer Protection, Federal Trade Commission, 600 Pennsylvania Ave., NW., Washington, DC 20580, (202) 326–3147.

For the Amplifier Rule, contact Neil Blickman, Attorney, Division of Enforcement, Federal Trade Commission, Bureau of Consumer Protection, 600 Pennsylvania Ave., NW., Washington, DC 20580, (202) 326–3038.

For the Franchise Rule, contact Steven Toporoff, Attorney, Division of Marketing Practices, Bureau of Consumer Protection, Federal Trade Commission, 600 Pennsylvania Ave., NW., Washington, DC 20580, (202) 326–3135.

For the R-Value Rule, contact Hampton Newsome, Attorney, Division of Enforcement, Bureau of Consumer Protection, Federal Trade Commission, 600 Pennsylvania Ave., NW., Washington, DC 20580, (202) 326–2889.

For the Administrative Activities clearance, contact J. Ronald Brooke Jr., Attorney, Division of Planning and Information, Bureau of Consumer Protection, Federal Trade Commission, 600 Pennsylvania Ave., NW., Rm. H–155, Washington, DC 20580, (202) 326–3484.

SUPPLEMENTARY INFORMATION: Under the PRA, federal agencies must obtain approval from OMB for each collection of information they conduct or sponsor. ''Collection of information'' means agency requests or requirements that members of the public submit reports, keep records, or provide information to a third party. 44 U.S.C. 3502(3), 5 CFR 1320.3(c). As required by section 3506(c)(2)(A) of the PRA, the FTC is providing this opportunity for public comment before requesting that OMB extend the existing paperwork clearance for the Negative Option Rule, 16 CFR Part 425 (OMB Control Number 3084–0104); the Amplifier Rule, 16 CFR Part 432 (OMB Control Number 3084–0105); the Franchise Rule, 16 CFR Part 436 (OMB Control Number 3084–0107); the R-Value Rule, 16 CFR Part 460 (OMB Control Number 3084–0109); and the Administrative Activities Clearance (OMB Control Number 3084–0047).

The FTC invites comments on: (1) Whether the proposed collection of information is necessary for the proper performance of the functions of the agency, including whether the information will have practical utility; (2) the accuracy of the agency's estimate of the burden of the proposed collection of information, including the validity of the methodology and assumptions used; (3) ways to enhance the quality, utility, and clarity of the information to be collected; and (4) ways to minimize the burden of the collection of information on those who are to respond, including through the use of appropriate automated, electronic, mechanical, or other technological collection techniques or other forms of information technology, *e.g.*, permitting electronic submission of responses.

1. The Negative Option Rule, 16 CFR Part 425 (OMB Control Number: 3084–0104)

The Negative Option Rule governs the operation of prenotification subscription plans. Under these plans, sellers ship merchandise, such as books, compact discs, or tapes, automatically to their subscribers and bill them for the merchandise if consumers do not expressly reject the merchandise within a prescribed time. The Rule protects consumers by: (a) requiring that promotional materials disclose the terms of membership clearly and conspicuously; and (b) establishing procedures for the administration of such ''negative option'' plans.

Estimated annual hours burden: 15,000 hours.

Staff estimates that approximately 190 existing clubs require annually about 75 hours each to comply with the Rule's disclosure requirements, for a total of 14,250 hours (190 clubs x 75 hours). These clubs should be familiar with the Rule, which has been in effect since 1974, with the result that the burden of compliance has declined over time. Moreover, a substantial portion of the existing clubs likely would make these disclosures absent the Rule because they have helped foster long-term relationships with consumers.

Approximately 5 new clubs come into being each year. These clubs require approximately 120 hours to comply with the Rule, including start up-time. Thus, cumulative PRA burden for new clubs is about 600 hours. Combined with the estimated burden for established clubs, total burden is 14,850 hours or 15,000, rounded to the nearest thousand.

[1] Commission Rule 4.2(d), 16 CFR 4.2(d). The comment must be accompanied by an explicit request for confidential treatment, including the factual and legal basis for the request, and must identify the specific portions of the comment to be withheld from the public record. The request will be granted or denied by the Commission's General Counsel, consistent with applicable law and the public interest. *See* Commission Rule 4.9(c), 16 CFR 4.9(c).

Estimated annual cost burden: $490,000, rounded to the nearest thousand (solely related to labor costs).

Based on recent data from the Bureau of Labor Statistics, the average compensation for advertising managers is approximately $36 per hour. Compensation for clerical personnel is approximately $13 per hour. Assuming that managers perform the bulk of the work, while clerical personnel perform associated tasks (*e.g.*, placing advertisements and responding to inquiries about offerings or prices), the total cost to the industry for the Rule's paperwork requirements would be approximately $489,750 [(65 hours managerial time × 190 existing negative option plans × $36 per hour) + (10 hours clerical time × 190 existing negative option plans × $13 per hour) + (110 hours managerial time × 5 new negative option plans × $36 per hour) + (10 hours clerical time × 5 new negative option plans × $13)].

Because the Rule has been in effect since 1974, the vast majority of the negative option clubs have no current start-up costs. For the few new clubs that enter the market each year, the costs associated with the Rule's disclosure requirements, beyond the additional labor costs discussed above, are *de minimis*. Negative option clubs already have access to the ordinary office equipment necessary to achieve compliance with the Rule. Similarly, the Rule imposes few, if any, printing and distribution costs. The required disclosures generally constitute only a small addition to the materials that a prospective subscriber sends to the seller to solicit enrollment in a negative option plan. Because printing and distribution expenditures are incurred regardless of the Rule to market the product, adding the required disclosures to them would result in marginal incremental expense.

2. The Amplifier Rule, 16 CFR Part 432 (OMB Control Number: 3084–0105)

The Amplifier Rule assists consumers by standardizing the measurement and disclosure of power output and other performance characteristics of amplifiers in stereos and other home entertainment equipment. The Rule also specifies the test conditions necessary to make the disclosures that the Rule requires.

Estimated annual hours burden: 450 hours (300 testing-related hours; 150 disclosure-related hours).

The Rule's provisions require affected entities to test the power output of amplifiers in accordance with a specified FTC protocol. The staff estimates that approximately 300 new amplifiers and receivers come on the market each year. High fidelity manufacturers routinely conduct performance tests as part of any new product development. As a result, the Rule imposes incremental costs only to the extent that the FTC protocol is more time-consuming than alternative testing procedures. Specifically, a warm up (''precondition'') period that the Rule requires before measurements are taken may add approximately one hour to the time testing entails. Thus, staff estimates that the Rule imposes approximately 300 hours (1 hour x 300 new products) of added testing burden annually.

The Rule requires disclosures if a media advertisement makes a power output claim or if a manufacturer specification sheet and product brochure for a covered product make a power output claim. This requirement does not impose any additional costs on manufacturers because, absent the Rule, media advertisements, as well as manufacturer specification sheets and product brochures, simply would contain a power specification obtained using an alternative to the Rule-required testing protocol. The Rule, though, also requires disclosure of harmonic distortion, power bandwidth, and impedance ratings in manufacturer specification sheets and product brochures. The staff's research suggests that approximately 300 new amplifiers and receivers are introduced each year. The cost of disclosing the ancillary distortion, bandwidth, and impedance information in the potentially 600 new specification sheets and brochures produced each year for those products (300 × 2) is limited to the time needed to draft and review the language pertaining to the aforementioned specifications. Because this Rule became effective in 1974 and because members of the industry are familiar with its requirements, compliance is less burdensome today. Accordingly, staff continues to estimate the time involved for this task to be a maximum of ¼ hour for each new specification sheet and brochure (600 × .25 hours), for a total annual burden of 150 hours. The total annual burden imposed by the Rule, therefore, is approximately 450 burden hours for testing and disclosures.

Estimated annual cost burden: $16,000, rounded to the nearest thousand (solely relating to labor costs).

Based on recent data from the Bureau of Labor Statistics, the average hourly compensation for electronics engineers is about $36, and the average hourly compensation for advertising and promotions managers is about $36. Generally, electronics engineers perform the testing of amplifiers and receivers (300 hours × $36 = $10,800), and advertising or promotions managers prepare product brochures and manufacturer specification sheets (including required disclosures) (150 hours × $36 = $5,400). Based on this information, staff estimates industry labor costs associated with the Rule of approximately $16,000 per year, rounded to the nearest thousand.

The Rule imposes no capital or other non-labor costs because its requirements are incidental to testing and advertising done in the ordinary course of business.

3. The Franchise Rule, 16 CFR Part 436 (OMB Control Number: 3084–0107)

The Franchise Rule requires franchisors and franchise brokers to furnish to prospective investors a disclosure document that provides information relating to the franchisor, the franchisor's business, the nature of the proposed franchise relationship, as well as additional information about any claims concerning actual or potential sales, income, or profits for a prospective franchisee (''financial performance claims''). The franchisor must also preserve the information that forms a reasonable basis for such claims. The FTC is seeking to extend the PRA clearance for the existing Rule. In addition, the FTC is seeking PRA clearance for the rule changes that have been proposed in the ongoing rulemaking proceeding.

Estimated annual hours burden for existing Franchise Rule: 33,500 hours.

The Rule's required disclosure document provides franchisees with information on broad-ranging subjects that affect franchisors and the nature of the proposed franchise relationship. This includes not only generally available information, such as the official name and address and principal place of business of the franchisor, but also less commonly available information, such as, among other things, the previous five years business experience of a franchisor's current directors and executive officers and whether any of these individuals have been convicted of a felony or fraud or have filed for bankruptcy or been adjudged bankrupt during the previous seven years. All information in the disclosure statement must be updated and revised according to the express time requirements set forth in the Rule.

Based on a review of the trade publications and information from state regulatory authorities, staff believes that, on average, from year to year, there are approximately 5,000 American franchise systems, consisting of 2,500 business format franchises and 2,500

business opportunity sellers, with approximately 500 (or 10%) of the total reflecting new entrants who have replaced departing businesses. Staff has calculated burden based on the above estimates. Some franchisors, however, for various reasons, are not covered by the Rule in certain situations (*e.g.*, when a franchisee buys bona fide inventory but pays no franchisor fees). Moreover, fifteen states have franchise disclosure laws similar to the Rule. These states use a disclosure document format known as the Uniform Franchise Offering Circular (''UFOC''). In order to ease compliance burdens on the franchisor, the Commission has authorized use of the UFOC in lieu of its own disclosure format to satisfy the Rule's disclosure requirements. Staff estimates that about 95 percent of all franchisors use the UFOC format. When that format is used, the franchisor is not required to prepare an additional federal disclosure document. The burden hours stated below reflects staff's estimate of the incremental burden that the Franchise Rule may impose beyond information requirements imposed by states and/or followed by franchisors who use the UFOC.

Staff estimates that the 500 or so new franchisors (including business opportunity ventures) require approximately 30 hours each to develop a Rule-compliant disclosure document. Staff additionally estimates that the remaining 4,500 established franchisors require no more than approximately 3 hours each to update the disclosure document. The combined cumulative burden is 28,500 hours.

The franchisor may require additional recordkeeping of information pertaining to the sale of franchises in non-registration states. At most, franchisors would require an additional hour of recordkeeping per year. This yields a cumulative total of 5,000 hours per year for affected entities.

Estimated annual cost burden for existing rule: $7,190,000.

Labor costs are determined by applying applicable wage rates to associated burden hours. Staff assumes that an attorney likely would prepare or update the disclosure document. Accordingly, staff's estimate of the labor costs attributed to those tasks are as follows: (500 new franchisors × $250 per hour × 30 hours per franchisor) + (4,500 established franchisors × $250 per hour × 3 hours per franchisor) = $7,125,000.

Staff anticipates that recordkeeping would be performed by clerical staff at approximately $13 per hour. At 5,000 hours per year for all affected entities, this would amount to a total cost of $65,000. Thus, combined labor costs for recordkeeping and disclosure is approximately $7,190,000.

Estimated increase in annual hours burden for proposed rule amendments: 2750 hours.

The Commission has begun a rulemaking proceeding to amend the Franchise Rule. 64 FR 57294 (1999) (Notice of Proposed Rulemaking). The Staff Report on the Proposed Revised Franchise Rule (Aug. 25, 2004) (''Staff Report''), which is available online at *http://www.ftc.gov*, sets forth the staff's recommendations to the Commission on various proposed amendments to the Franchise Rule. The Commission did not review or approve the staff report prior to its issuance. See 69 FR 53661 (2004) (Notice Announcing Publication of Staff Report). Among other things, the Rule amendments discussed in the Staff Report would accomplish five goals. First, the staff has recommended that the amended Rule address the sale of business format and product franchises exclusively. The existing requirements for business opportunity ventures would be renumbered as a separate rule limited to business opportunities only. See Staff Report at 13 and n.42. Accordingly, the burden for business opportunity ventures will remain the same.

Second, the amended Rule would reduce inconsistencies between federal and state disclosure requirements. Fifteen states have franchise disclosure laws similar to the Rule. These states use a disclosure document format known as the Uniform Franchise Offering Circular (''UFOC''). Staff estimates that about 95 percent of all franchisors use the UFOC format. The amended Rule would incorporate nearly all of the UFOC disclosures, thereby harmonizing federal and state disclosure laws.

Third, the amended Rule would require the disclosure of more information on the quality of the franchise relationship. Among other things, franchisors would disclose litigation initiated against franchisees involving the franchise relationship and franchisee-specific trademark associations.

Fourth, the amended Rule would update the rule to address new technologies. Specifically, it would permit franchisors to furnish disclosures electronically. This includes transmission via CD ROM, e-mail, and access to a Web site.

Finally, the amended Rule would reduce compliance costs by expanding exemptions from disclosure. Specifically, the amended Rule would create new exemptions for sophisticated investors and for sales to managers and others within the franchise system who are already familiar with the franchise system's operations.

At the same time, the amended Rule would increase franchisor's recordkeeping obligations. Specifically, a franchisor would be required to retain copies of receipts for disclosure documents, as well as materially different versions of its disclosure documents. Such recordkeeping requirements, however, are consistent with, or less burdensome, than those imposed by the states.

Staff estimates the increase in burden attributable to the proposed Rule amendments as follows: Each year, approximately 250 new franchisors will require 32 hours each (2 hours more than under the existing Rule) to develop a Rule-compliant disclosure document (increase of 500 hours). Staff also estimates that during the first year that the amended Rule is effective, the remaining 2250 established franchisors will require approximately 6 hours each (3 hours more than under the existing Rule) to update their existing disclosure document to comply with the amended Rule (increase of 6750 hours for the first year). After the first year, however, the time required should be the same as under the existing Rule, as the new disclosure format becomes familiar. Accordingly, the increase in the annual disclosure burden, averaged over the three-year clearance period, will be 2750 hours (500 hours per year for new franchisors + 2250 hours per year for established franchisors).

Estimated increase in annual cost burden for proposed rule amendments: $688,000, rounded to the nearest thousand.

Labor costs are determined by applying applicable wage rates to associated burden hours. Staff assumes that an attorney likely would prepare the disclosure document. Accordingly, staff's estimate of the increase in labor costs that would be attributable to the proposed Rule amendments, averaged over the three-year clearance period, is as follows: (500 hours per year for new franchisors × $250 per hour) + (2250 hours per year for established franchisors × $250) = $687,500.

4. R-value Rule, 16 CFR Part 460 (OMB Control Number: 3084–0109)

The R-value Rule establishes uniform standards for the substantiation and disclosure of accurate, material product information about the thermal performance characteristics of home insulation products. The R-value of an insulation signifies the insulation's degree of resistance to the flow of heat. This information tells consumers how

well a product is likely to perform as an insulator and allows consumers to determine whether the cost of the insulation is justified.

Estimated annual hours burden: 121,000 hours.

The Rule's requirements include product testing, recordkeeping, and third-party disclosures on labels, fact sheets, advertisements, and other promotional materials. Based on information provided by members of the insulation industry, staff estimates that the Rule affects: (1) 150 insulation manufacturers and their testing laboratories; (2) 1,615 installers who sell home insulation; (3) 125,000 new home builders/sellers of site-built homes and approximately 5,500 dealers who sell manufactured housing; and (4) 25,000 retail sellers who sell home insulation for installation by consumers.

Under the Rule's testing requirements, manufacturers must test each insulation product for its R-value. The test takes approximately 2 hours. Approximately 15 of the 150 insulation manufacturers in existence introduce one new product each year. The total annual testing burden is therefore approximately 30 hours (15 manufacturers × 2 hours per test).

Staff further estimates that most manufacturers require an average of approximately 20 hours per year with regard to third-party disclosure requirements in advertising and other promotional materials. Only the five or six largest manufacturers require additional time, approximately 80 hours each. Thus, the annual third-party disclosure burden for manufacturers is approximately 3,360 hours [(144 manufacturers × 20 hours) + (6 manufacturers × 80 hours)].

While the Rule imposes recordkeeping requirements, most manufacturers and their testing laboratories keep their testing-related records in the ordinary course of business. Staff estimates that no more than one additional hour per year per manufacturer is necessary to comply with this requirement, for an annual recordkeeping burden of approximately 150 hours (150 manufacturers × 1 hour).

Installers are required to show the manufacturers' insulation fact sheet to retail consumers before purchase. They must also disclose information in contracts or receipts concerning the R-value and the amount of insulation to install. Staff estimates that two minutes per sales transaction is sufficient to comply with these requirements. Approximately 1,520,000 retrofit insulations are installed by approximately 1,615 installers per year, and, thus, the related annual burden total is approximately 50,667 hours (1,520,000 sales transactions × 2 minutes). Staff anticipates that one hour per year per installer is sufficient to cover required disclosures in advertisements and other promotional materials. Thus, the burden for this requirement is approximately 1,615 hours per year (1,615 installers × 1 hour). In addition, installers must keep records that indicate the substantiation relied upon for savings claims. The additional time to comply with this requirement is minimal—approximately 5 minutes per year per installer—for a total of approximately 135 hours (1,615 installers × 5 minutes).

New home sellers must make contract disclosures concerning the type, thickness, and R-value of the insulation they install in each part of a new home. Staff estimates that no more than 30 seconds per sales transaction is required to comply with this requirement, for a total annual burden of approximately 14,167 hours (1.7 million new home sales × 30 seconds). New home sellers who make energy savings claims must also keep records regarding the substantiation relied upon for those claims. Because few new home sellers make these claims, and the ones that do would likely keep these records regardless of the R-value Rule, staff believes that the 30 seconds covering disclosures would also encompass this recordkeeping element.[2]

The Rule requires that the approximately 25,000 retailers who sell home insulation make fact sheets available to consumers before purchase. This can be accomplished by, for example, placing copies in a display rack or keeping copies in a binder on a service desk with an appropriate notice. Replenishing or replacing fact sheets should require no more than approximately one hour per year per retailer, for a total of 25,000 annual hours, industry-wide.

The Rule also requires specific disclosures in advertisements or other promotional materials to ensure that the claims are fair and not deceptive. This burden is very minimal because retailers typically use advertising copy provided by the insulation manufacturer, and even when retailers prepare their own advertising copy, the Rule provides some of the language to be used. Accordingly, approximately one hour per year per retailer should suffice to meet this requirement, for a total annual burden of approximately 25,000 hours.

Retailers who make energy savings claims in advertisements or other promotional materials must keep records that indicate the substantiation they are relying upon. Because few retailers make these types of promotional claims and because the Rule permits retailers to rely on the insulation manufacturer's substantiation data for any claims that are made, the additional recordkeeping burden is *de minimis*. The time calculated for disclosures, above, would be more than adequate to cover any burden imposed by this recordkeeping requirement.

To summarize, staff estimates that the Rule imposes a total of 120,624 burden hours, as follows: 150 recordkeeping and 3,390 testing and disclosure hours for manufacturers; 135 recordkeeping and 52,282 disclosure hours for installers; 14,667 disclosure hours for new home sellers; and 50,000 disclosure hours for retailers. Rounded to the nearest thousand, the total burden is 121,000 burden hours.

Estimated annual cost burden: $2,738,000, rounded to the nearest thousand (solely related to labor costs).

The total annual labor costs for the Rule's information collection requirements is $2,737,902, derived as follows: $690 for testing, based on 30 hours for manufacturers (30 hours × $23 per hour for skilled technical personnel); $3,705 for complying with the recordkeeping requirements of the Rule, based on 285 hours (285 hours × $13 per hour for clerical personnel); $43,680 for manufacturers' compliance with third-party disclosure requirements, based on 3,360 hours (3,360 hours × $13 per hour for clerical personnel); and $2,689,827 for compliance by installers, new home sellers, and retailers (116,949 hours × $23 per hour for sales persons).

There are no significant current capital or other non-labor costs associated with this Rule. Because the Rule has been in effect since 1980, members of the industry are familiar with its requirements and already have in place the equipment for conducting tests and storing records. New products are introduced infrequently. Because the required disclosures are placed on packaging or on the product itself, the Rule's additional disclosure requirements do not cause industry members to incur any significant additional non-labor associated costs.

[2] In previous requests for clearance under the PRA, the FTC staff assumed that the requirements related to new home sales contracts require one minute per sales transaction. See, *e.g.*, 67 FR 21243, 21246 (April 30, 2002). The FTC staff now estimates that the inclusion of such information should take no more than 30 seconds per sales transaction because of increased automation, the wide-spread use of standard contracts, and the prevalence of large firms in the housing market. In addition, there was a calculation error in the previous requests that significantly overestimated the total burden imposed by new home sale contract disclosures.

5. FTC Administrative Activities (OMB Control Number: 3084–0047)

This category consists of: (a) Applications to the Commission, including applications and notices contained in the Commission's Rules of Practice (primarily Parts I, II, and IV); (b) the FTC's Consumer Response Center; (c) FTC staff review of Commission divestiture orders in merger cases; and (d) Applicant Background Form.

Estimated annual hours burden: 115,000 hours, rounded to the nearest thousand.

(a) Applications to the Commission, Including Applications and Notices Contained in the Commission's Rules of Practice: 125 Hours

Most applications to the Commission generally fall within the ''law enforcement'' exception to the Paperwork Reduction Act.[3] Over the last decade, the Commission has received only one application for an exemption under the Fair Debt Collection Practices Act provisions. Staff has estimated that such a submission can be completed well within 50 hours. Applications and notices to the Commission contained in other rules (generally in Parts I, II, and IV of the Commission's Rule of Practice) are also infrequent and difficult to quantify. Nonetheless, in order to cover any potential ''collections of information'' for which separate clearance has not been sought, staff is projecting 125 hours as its estimate of the time needed to submit any applicable responses.[4]

(b) Complaint Systems: 114,300 Hours

Consumer Response Center

Consumers can submit complaints about fraud and other practices to the FTC's Consumer Response Center by telephone or through the FTC's Web site. Telephone complaints and inquiries to the FTC are answered both by FTC staff and contractors. These telephone counselors ask for the same information that consumers would enter on the applicable forms available on the FTC's Web site. For telephone inquiries and complaints, the FTC staff estimates that it takes 4.5 minutes per call to gather information, somewhat less time than the 5 minutes estimated for consumers to enter a complaint online.[5] The burden estimate conservatively assumes that all of the phone call is devoted to collecting information from consumers, although frequently telephone counselors devote a small portion of the call to providing requested information to consumers.

Complaints Concerning National Do-Not-Call Registry

To handle complaints from consumers relating to possible violations of the National Do-Not-Call Registry, the FTC maintains both an online form and a toll free hotline. Both collect significantly less data than what is usually collected in a general consumer complaint.[6] The hotline uses an automated voice response system to collect information from consumer complainants. The FTC staff estimates that phone complaints require 2.5 minutes and online complaints require 2 minutes.

Identity Theft

To handle complaints about identity theft, the FTC must obtain more detailed information than is required of other complainants. The FTC designed its online identity theft form to be as short as practicable, seeking only the minimum information needed for initial evaluation and potential follow up. When consumers call the Consumer Response Center, however, the telephone counselors seek to obtain more detailed and comprehensive information to minimize the need for follow up calls. Staff estimates it takes 8 minutes per call to obtain this information because investigating identity theft requires more information (such as credit history, credit bureau information, respondent social security number, identifying multiple suspects) than general consumer complaints and complaints about fraud. A substantial portion of identity theft-related calls typically consists of counseling consumers on other steps they should consider taking to obtain relief. The time needed for counseling is excluded from the estimate.

Consumer customer satisfaction surveys give the agency information about the overall effectiveness and timeliness of the Consumer Response Center (CRC). The CRC surveys roughly 1 percent of complainants. Subsets of consumers contacted throughout the year are questioned about specific aspects of CRC customer service. Each consumer surveyed is asked several questions chosen from a list prepared by staff. The questions are designed to elicit information from consumers about the overall effectiveness of the call center. Half of the questions ask consumers to rate CRC performance on a scale or require a yes or no response. The second half of the survey asks more open-ended questions seeking a short written or verbal answer. Staff estimates that each respondent will require 4 minutes to answer the questions (approximately 20–30 seconds per question).

Finally, Consumer Sentinel user surveys give the agency information about the overall effectiveness of its Consumer Sentinel Network. Consumer Sentinel allows federal, state and local law enforcement organizations common access to a secure database containing over two million complaints from victims of consumer fraud and identity theft. To date, Consumer Sentinel has over 1200 members, including law enforcement agencies from Canada and Australia. FTC staff plan to survey roughly 50% (approximately 2,500 respondents) of Consumer Sentinel users each year about such things as overall satisfaction, performance, and possible improvements. Generally, the surveys should take approximately 10 minutes per respondent (417 hours total).

What follows are staff's estimates of burden for these various collections of information, including the surveys. The figures for the online forms and consumer hotlines are an average of annualized volume for the respective programs including both current and projected volumes over the 3-year clearance period sought and are rounded to the nearest thousand.

[3] The ''law enforcement'' exception to the PRA excludes most items in this subcategory because they involve collecting information during the conduct of a Federal investigation, civil action, administrative action, investigation, or audit with respect to a specific party, or subsequent adjudicative or judicial proceedings designed to determine fines or other penalties. See 44 U.S.C. 3518(c)(1); 5 CFR 1320.4(a)(1)–(3).

[4] This includes Commission Rule of Practice 4.11(e), 16 CFR 4.11(e), which establishes procedures for agency review of outside requests for Commission employee testimony, through compulsory process or otherwise, in cases or matters to which the agency is not a party. The rule requires that a person who seeks such testimony submit a statement in support of the request. Staff estimates that agency personnel receive roughly 2 such requests per month or 24 per year, and conservatively estimates that it would require up to 2 hours to prepare the statement, for a cumulative total of 24 hours.

[5] Because the fraud-related form is closely patterned after the general complaint form, burden estimates per respondent for each are the same.

[6] In general, Do-Not-Call complaints consist of consumer contact information, telemarketing company name or telephone number and the date and time of the telemarketing call being complained about.

Activity	Number of respondents	Number of minutes/ activity	Total hours
Miscell. and fraud-related consumer complaints (phone)*	315,000	4.5	23,625
Miscell. and fraud-related consumer complaints (online)**	135,000	5.0	11,250
IDT complaints (phone)*	380,000	8	50,667
IDT complaints (online)**	80,000	7.5	10,000
Do-Not-Call related consumer complaints (phone)	82,000	2.5	3,417
Do-Not-Call related consumer complaints (online)	430,000	2	14,333
Customer Satisfaction Questionnaire	9,000	4.0	600
Consumer Sentinel User Surveys	2,500	10	417
Totals	1,433,500		114,309

* Number of consumer calls calculated by projecting over the 3-year clearance period sought 5% annual growth and a telephone contractor response rate of 95% (contracted level of service) with regard to consumers who call the toll free lines and opt to talk to a counselor.

** Number of online collections projected from number of consumers who use the FTC's online complaint forms noted in the text above. These figures also assume 5% annual growth over the 3-year clearance period requested.

Annual cost burden:

The cost per respondent should be negligible. Participation is voluntary and will not require any labor expenditures by respondents. There are no capital, start-up, operation, maintenance, or other similar costs to the respondents.

(c) Review of Divestiture Orders: 320 Hours

The Commission issues, on average, approximately 10–15 orders in merger cases per year that require divestitures. As a result of a 1999 study authorized by the OMB and conducted by the staffs of the Bureau of Competition and the Bureau of Economics,[7] the Bureau of Competition (''BC'') intends to enhance its monitoring of these required divestitures by interviewing representatives of the Commission-approved buyers of the divested assets within the first year after the divestiture is completed. For the first several years of this new evaluation process, however, BC staff will be focusing on older orders and thus anticipates reviewing up to 40 divestitures per year.

BC staff will interview representatives of the buyers to ask whether all assets required to be divested were, in fact, divested;[8] whether the buyer has used the divested assets to enter the market of concern to the Commission and, if so, the extent to which the buyer is participating in the market; whether the divestiture met the buyer's expectations; and whether the buyer believes the divestiture has been successful. BC staff may also interview other participants, including customers or trustee monitors, as appropriate. In all these interviews, staff will seek to learn about pricing and other basic facts regarding competition in the markets of concern to the agency.

Participation by the buyers will be voluntary. Each responding company will designate the company representative most likely to have the necessary information; in all likelihood, it will be a company executive and a lawyer for the company may also be present. BC staff estimates that each interview will take approximately one hour to complete, with no more than an hour's preparation required by each of the participants. In some instances, staff may do additional interviews with customers of the responding company or the monitor. Staff conservatively estimates that for each interview, two individuals (a company executive and a lawyer) will devote two hours each to responding to our questions for a total of four hours. In addition, for approximately half of the divestitures, staff will seek to question two additional respondents, adding four participants (a company executive and a lawyer for each of the two additional respondents) devoting two hours each, for a total of eight additional hours. Assuming that staff evaluates up to 40 divestitures per year during the three-year clearance period, the total hours burden for the responding companies will be approximately 320 hours per year ((40 × 4 hours) + (20 × 8 hours)).

Using the burden hours estimated above, staff estimates that the total annual labor cost, based on a conservative estimated average of $425/hour for executives' and attorneys' wages, would be approximately $136,000 (320 hours × $425).

(d) Applicant Tracking Form: 400 Hours

The FTC's Human Resources Management Office intends to survey job applicants on their ethnicity, race, and disability status in order to determine if recruitment is effectively reaching all aspects of the relevant labor pool, in compliance with management directives from the Equal Opportunity Employment Commission. Response by applicants is optional. The information obtained will be used for evaluating recruitment only and plays no part in the selection of who is hired. The information is not provided to selecting officials. Instead, the information is used in summary form to determine trends over many selections within a given occupational or organizational area. The information is treated in a confidential manner. No information from the form is entered into the official personnel file of the individual selected and all forms are destroyed after the conclusion of the selection process. The format of the questions on ethnicity and race are compliant with OMB requirements and comparable to those used by other agencies.

The FTC staff estimates that up to 5,000 applicants will submit the form as part of the new online application process and that the form will require 5 minutes to complete, for an annual burden total of approximately 400 hours.

Annual cost burden:

The cost per respondent should be negligible. Participation is voluntary and will not require any labor expenditures by respondents. There are no capital, start-up, operation, maintenance, or other similar costs to the respondents.

William Blumenthal,

General Counsel.

[FR Doc. 05–10026 Filed 5–18–05; 8:45 am]

BILLING CODE 6750–01–P

[7] The Staff of the Bureau of Competition of the Federal Trade Commission compiled its findings from the study in its report: A Study of the Commission's Divestiture Process, 1999, available at *http://www.ftc.gov/os/1999/08/divestiture.pdf.*

[8] To the extent that the staff interviews focus on a law enforcement activity (whether the party to the order complied with all its obligations), the interviews are not subject to the requirements of the Paperwork Reduction Act. *See supra* note 3.

FEDERAL TRADE COMMISSION

Granting of Request for Early Termination of the Waiting Period Under the Premerger Notification Rules

Section 7A of the Clayton Act, 15 U.S.C. 18a, as added by Title II of the Hart-Scott-Rodino Antitrust Improvements Act of 1976, requires persons contemplating certain mergers or acquisitions to give the Federal Trade Commission and the Assistant Attorney General advance notice and to wait designated periods before consummation of such plans. Section 7A(b)(2) of the Act permits the agencies, in individual cases, to terminate this waiting period prior to its expiration and requires that notice of this action be published in the **Federal Register**.

The following transactions were granted early termination of the waiting period provided by law and the premerger notification rules. The grants were made by the Federal Trade Commission and the Assistant Attorney General for the Antitrust Division of the Department of Justice. Neither agency intends to take any action with respect to these proposed acquisitions during the applicable waiting period.

Trans #	Acquiring	Acquired	Entitiies
Transactions Granted Early Termination—04/22/2005			
20050831	UBS AG	NAU Holding Company, LLC	NAU Holding Company, LLC.
20050839	Carmike Cinemas, Inc.	Flora Beth Kerasotes	George G. Kerasotes Corporation.
20050840	Apollo Investment Fund IV, L.P.	iPCS, Inc.	iPCS, Inc.
20050844	Odyssey Investment Partners Fund III, LP.	Neff Corp.	Neff Corp.
20050845	DST Systems, Inc.	Computer Sciences Corporation	CSC Healthcare, Inc.
20050850	American Capital Strategies, Ltd.	Lawrence Richenstein	Unwired Technology LLC.
20050853	Leucadia National Corporation	Larry and Marianne Williams	Alumni Forest Products, Inc., Idaho Cedar Sales, Inc., Idaho Timber Corporation, Idaho Timber Corporation of Albuquerque, Inc., Idaho Timber Corporation of Boise, Inc., Idaho Timber Corporation of Carthage, Inc., Idaho Timber Corporation of Idaho, Inc., Idaho Timber Corporation of Kansas, Inc., Idaho Timber Corporation of Montana, Inc., Idaho Timber Corporation of Mountain Home, Inc., Idaho Timber Corporation of North Carolina, Inc., Idaho Timber Corporation of Texas, Inc.
20050855	Cantor Fitzgerald, L.P.	Maxcor Financial Group Inc.	Maxcor Financial Group Inc.
20050856	FS Equity Partners V, LP	Gryphon Dental Partners, L.P.	Bright Now Dental, Inc.
20050860	MBNA Corporation	KKR 1996 Fund L.P.	Nexstar Financial Corporation.
Transactions Granted Early Termination—04/25/2005			
20050778	IVAX Corporation	Green Equity Investors III, L.P.	PSI Holdings, Inc.
20050852	Peter C. Georgiopoulos	General Maritime Corporation	General Maritime Corporation.
20050858	August Capital III, L.P.	Seagate Technology	Seagate Technology.
20050859	Silver Lake Partners Cayman, L.P.	Seagate Technology	Seagate Technology.
Transactions Granted Early Termination—04/26/2005			
20050825	Olympus Corporation	R/D Tech Inc.	R/D Tech Inc.
Transactions Granted Early Termination—04/27/2005			
20050774	Hanson PLC	HeidelbergCement AG	Sherman Industries, Inc.
20050861	Oil States International, Inc.	Mr. and Mrs. L. Murray Dallas	Stinger Wellhead Protection, Incorporated.
Transactions Granted Early Termination—04/28/2005			
20050802	Round Table Healthcare Management, L.L.C..	Clinical Innovation Associates, Inc.	Clinical Innovation Associates, Inc.
20050843	Wicks Communications & Media Partners, L.P..	Jobson Publishing L.L.C.	Jobson Publishing L.L.C.
Transactions Granted Early Termination—04/29/2005			
20050851	Trapax Payments Limited	Lloyd M. Dorfman	Travelex Holdings Limited.
20050862	GfK Nurnberg e.V.	United Business Media plc	Barterstore Limited, NOPWorld, Inc.
20050867	WLR Recovery Fund, L.P.	ICG Holdco, Inc.	ICG Holdco, Inc.
20050868	WLR Recovery Fund II, L.P.	ICG Holdco, Inc.	ICG Holdco, Inc.
20050869	Hicks, Muse, Tate & Furst Equity Fund V, L.P..	Mason Wells Leveraged Buyout Fund I, Limited Partnership.	Sturm Foods, Inc.
20050872	GSCP Emax Acquisition, LLC	Citigroup Inc.	Euramax International, Inc.
20050874	General Atlantic Partners 79, L.P.	Joshua Peterson	Adteractive, Inc.

Trans #	Acquiring	Acquired	Entitiies
20050875	Cisco Systems, Inc.	Topspin Communications, Inc.	Topspin Communications, Inc.
20050876	TPG Partners III, L.P.	Seagate Technology	Seagate Technology.
20050880	Summit Ventures VI–A, L.P.	Thomas John McDowell and Victoria Knight McDowell.	Airborne, Inc.
20050881	Brisbane SA	Dometic International AB	Dometic Corporation.
20050882	Electronics For Imaging, Inc.	American Securities Partners II, L.P.	VUTEk Inc.
20050883	Melrose PLC	Dynacast International Limited	Dynacast International Limited.
20050884	Melrose PLC	Mozart Jersey Holdings No 1 Limited	McKechnie Aerospace Holdings Ltd., McKechnie EP Holdings Ltd., McKechnie Holdings (UK) Ltd.
20050888	Stephen J. Luczo	Seagate Technology	Seagate Technology.
20050892	FdG Capital Partners II, L.P.	The Hercules Tire & Rubber Company	The Hercules Tire & Rubber Company.
Transactions Granted Early Termination—05/02/2005			
20050796	Johnson & Johnson	Closure Medical Corporation	Closure Medical Corporation.
Transactions Granted Early Termination—05/05/2005			
20050303	Wm. Wrigley Jr. Company	Altria Group Inc.	Altria Group Inc.
20050865	Knight Trading Group, Inc.	Mark D. Gulis	Direct Trading Institutional, LLC.
20050866	Knight Trading Group, Inc.	Allan P. Peterson	Direct Trading Institutional, LLC.
20050877	DLJ Merchant Banking Partners III, L.P..	Sterling Capital Partners, L.P.	PCDI Acquisition Corp.
Transactions Granted Early Termination—05/06/2005			
20050770	Cisco Systems, Inc.	Jan Fandrianto and Selfia Halim	Sipura Technology, Inc.
20050841	Laboratory Corporation of American Holdings.	Esorterix, Inc.	Esorterix, Inc.
20050897	FPL Group, Inc.	Gexa Corp.	Gexa Corp.
20050901	Alberto-Culver Company	Steven J. and Angelina C. Redding	Nexxus Products Company.
20050904	Johnson & Johnson	Peninsula Pharmaceuticals, Inc.	Peninsula Pharmaceuticals, Inc.
20050906	Verizon Communications Inc.	Leap Wireless international, Inc.	Cricket Alabama Property Company, Cricket Arkansas Property Company, Cricket Communications, Inc., Cricket Licensee II, Inc., Cricket Licensee I, Inc., Cricket Licensee (Reauction), Inc., Cricket Michigan Property Company, Cricket Mississippi Property Company, Cricket Wisconsin Property Company.
20050908	Spectrum Equity Partners IV, L.P.	VS&A Communications Partners II, L.P..	Canon Communications, LLC.
20050912	GGC Investment Fund II, L.P.	Plant Equipment, Inc.	Plant Equipment, Inc.
20050913	Bank of Montreal	Jill Wing Heck	Women's Marketing, Inc.
20050917	Autonomy Corporation plc	Greenwich Street Capital Partners II, L.P..	etalk Corporation.
20050918	Accentrue Ltd.	Cap Gemini S.A.	Capgemini U.S. LLC.
20050920	Gryphon Partners II, L.P.	Joshua Schott	Update, Inc.

FOR FURTHER INFORMATION CONTACT: Sandra M. Peay, Contact Representative or Renee Hallman, Case Managaement Assistant. Federal Trade Commission; Premerger Notification Office, Bureau of Competition, Room H–303, Washington, DC 20580. (202) 326–3100.

By Direction of the Commission.

Donald S. Clark,

Secretary.

[FR Doc. 05–10027 Filed 5–18–05; 8:45 am]

BILLING CODE 6750–01–M

GENERAL SERVICES ADMINISTRATION

[OGP–05–N01]

Notification of Web Site Location for Annual Motor Vehicle Reports

AGENCY: Office of Governmentwide Policy, General Services Administration (GSA).

ACTION: Notice.

SUMMARY: Under the provisions of the Energy Policy Act of 1992, as amended, and the reporting obligations under 42 U.S.C. 13218(b), GSA hereby provides, for public review, access to annual reports covering motor vehicle acquisitions beginning with the year 1999. Each report details the fuel type, vehicle classification, and number of vehicles acquired in the covered fiscal year. These reports are accessible on the agency's web site located at *http://www.gsa.gov/fleetreports*.

FOR FURTHER INFORMATION CONTACT: Mr. John Hughes, Administrative Policy Division (MCA), GSA, by phone at (202) 501–2162, or by e-mail at *john.hughes@gsa.gov*.

Dated: May 16, 2005.

Ernest M. Stevens,

Director, Administrative Policy Division.

[FR Doc. 05–10021 Filed 5–18–05; 8:45 am]

BILLING CODE 6820–FM–S

DEPARTMENT OF HEALTH AND HUMAN SERVICES

Office of the Secretary

[Document Identifier: OS–0990–0263]

Agency Information Collection Activities: Proposed Collection; Comment Request

AGENCY: Office of the Secretary.

In compliance with the requirement of section 3506(c)(2)(A) of the Paperwork Reduction Act of 1995, the Office of the Secretary (OS), Department of Health and Human Services, is publishing the following summary of proposed collections for public comment. Interested persons are invited to send comments regarding this burden estimate or any other aspect of this collection of information, including any of the following subjects: (1) The necessity and utility of the proposed information collection for the proper performance of the agency's functions; (2) the accuracy of the estimated burden; (3) ways to enhance the quality, utility, and clarity of the information to be collected; and (4) the use of automated collection techniques or other forms of information technology to minimize the information collection burden.

#1 *Type of Information Collection Request:* Extension of Currently Approved Collection;

Title of Information Collection: Protection of Human Subjects Assurance Identification/ Institutional Review Board (IRB) Certification/ Declaration of Exemption;

Form/OMB No.: OS–0990–0263;

Use: The Federal Policy for the Protection of Human Subjects, known as the Common Rule, requires that before engaging in non-exempt human subjects research that is conducted or supported by a Common Rule department or agency, each institution must: (1) Hold an applicable assurance of compliance [Section 103(a)]; and (2) certify to the awarding department or agency that the application or proposal for research has been reviewed and approved by an IRB designated in the assurance [Sections 103(b) and (f)].

Frequency: Reporting on occasion;

Affected Public: Federal, State, local, or tribal governments, business or other for-profit, not-for-profit institutions and individuals or households;

Annual Number of Respondents: 5,000; Total Annual Responses: 166,667;

Average Burden per Response: 0.25 hours;

Total Annual Hours: 41,667;

To obtain copies of the supporting statement and any related forms for the proposed paperwork collections referenced above, access the HHS Web site address at *http://www.hhs.gov/oirm/infocollect/pending/* or e-mail your request, including your address, phone number, OMB number, and OS document identifier, to *naomi.cook@hhs.gov,* or call the Reports Clearance Office on (202) 690–6162. Written comments and recommendations for the proposed information collections must be mailed within 60 days of this notice directly to the OS Paperwork Clearance Officer designated at the following address: Department of Health and Human Services, Office of the Secretary, Assistant Secretary for Budget, Technology, and Finance, Office of Information and Resource Management, Attention: Naomi Cook (0990–0263), Room 531–H, 200 Independence Avenue, SW., Washington, DC 20201.

Dated: May 11, 2005.

Robert E. Polson,

Office of the Secretary, Paperwork Reduction Act Reports Clearance Officer.

[FR Doc. 05–10004 Filed 5–18–05; 8:45 am]

BILLING CODE 4168–17–P

DEPARTMENT OF HEALTH AND HUMAN SERVICES

Centers for Disease Control and Prevention

Disease, Disability, and Injury Prevention and Control Special Emphasis Panel (SEP): Meeting

In accordance with Section 10(a)(2) of the Federal Advisory Committee Act (Pub. L. 92–463), the Centers for Disease Control and Prevention (CDC) announces the following meeting:

Name: Disease, Disability, and Injury Prevention and Control Special Emphasis Panel (SEP): Antimalarial Drug Resistance and Prevention of Malaria During Pregnancy CI05–061, Linkage of International Collaboration and Research Programs for Prevention and Control of Malaria, CI–05–062 and Comparisons of Community with Facility Management of Malaria and Pneumonia in Rural Tanzania, CI05–064.

Times and Dates: 1 p.m.–3:30 p.m., June 15, 2005 (Closed).

Place: Teleconference.

Status: Portions of the meeting will be closed to the public in accordance with provisions set forth in Section 552b(c) (4) and (6), Title 5 U.S.C., and the Determination of the Director, Management Analysis and Services Office, CDC, pursuant to Pub. L. 92–463.

Matters To Be Discussed: The meeting will include the review, discussion, and evaluation of applications received in response to: Preventing Maternal and Neonatal Bacterial Infections in Developing Settings with a High Prevalence of HIV: Antimalarial Drug Resistance and Prevention of Malaria During Pregnancy CI05–061, Linkage of International Collaboration and Research Programs for Prevention and Control of Malaria, CI–05–062 and Comparisons of Community with Facility Management of Malaria and Pneumonia in Rural Tanzania, CI05–064.

FOR FURTHER INFORMATION CONTACT: Trudy Messmer, Ph.D., Scientific Review Administrator, National Center for Infectious Diseases, CDC, 1600 Clifton Road NE., Mailstop C19, Atlanta, GA 30333, Telephone (404) 639–3770.

The Director, Management Analysis and Services Office, has been delegated the authority to sign **Federal Register** notices pertaining to announcements of meetings and other committee management activities, for both CDC and the Agency for Toxic Substances and Disease Registry.

Dated: May 12, 2005.

Alvin Hall,

Director, Management Analysis and Services Office, Centers for Disease Control and Prevention.

[FR Doc. 05–9987 Filed 5–18–05; 8:45 am]

BILLING CODE 4163–18–P

DEPARTMENT OF HEALTH AND HUMAN SERVICES

Food and Drug Administration

[Docket No. 2002D–0389] (formerly 02D–0389)

Guidance for Industry on Nonclinical Studies for the Safety Evaluation of Pharmaceutical Excipients; Availability

AGENCY: Food and Drug Administration, HHS.

ACTION: Notice.

SUMMARY: The Food and Drug Administration (FDA) is announcing the availability of a guidance for industry entitled ''Nonclinical Studies for the Safety Evaluation of Pharmaceutical Excipients.'' This document is intended to provide guidance on the types of toxicity information that FDA recommends be provided to the agency to support the use of new excipients in drug products. Previously, such information was not available to drug sponsors in a written document. This information should allow drug sponsors to determine if a potential new excipient is safe to use in drug products.

DATES: Submit written or electronic comments on agency guidances at any time.

ADDRESSES: Submit written requests for single copies of this guidance to the Division of Drug Information (HFD–240), Center for Drug Evaluation and Research, Food and Drug

Administration, 5600 Fishers Lane, Rockville, MD 20857, or the Office of Communications, Training, and Manufacturers Assistance (HFM–40), Center for Biologics Evaluation and Research, 1401 Rockville Pike, Food and Drug Administration, Rockville, MD 20852–1448. Send one self-addressed adhesive label to assist that office in processing your requests. The guidance may also be obtained by mail by calling the Center for Biologics Evaluation and Research at 1–800–835–4709 or 301–827–1800. Submit written comments on the guidance to the Division of Dockets Management (HFA–305), Food and Drug Administration, 5630 Fishers Lane, rm. 1061, Rockville, MD 20852. Submit electronic comments to *http://www.fda.gov/dockets/ecomments*. See the **SUPPLEMENTARY INFORMATION** section for electronic access to the guidance document.

FOR FURTHER INFORMATION CONTACT:

For the Center for Drug Evaluation and Research: Robert E. Osterberg, Center for Drug Evaluation and Research (HFD–520), Food and Drug Administration, 5600 Fishers Lane, Rockville, MD 20857, 301–827–2120, or

For the Center for Biologics Evaluation and Research: Mercedes A. Serabian, Center for Biologics Evaluation and Research (HFM–760), Food and Drug Administration, 5600 Fishers Lane, Rockville, MD 20857, 301–827–6536.

SUPPLEMENTARY INFORMATION:

I. Background

FDA is announcing the availability of a guidance for industry entitled ''Nonclinical Studies for the Safety Evaluation of Pharmaceutical Excipients.'' This guidance addresses the safety testing of potential excipients to be used in pharmaceutical products. Not all excipients are inert substances; some have been shown to be potential toxicants. The Federal Food, Drug, and Cosmetic Act of 1938 (the act) was enacted after the tragedy of the elixir of sulfanilamide in 1937 in which an untested excipient was responsible for the death of many children who consumed the pharmaceutical. The act required manufacturers to perform safety testing of pharmaceuticals and submit new drug applications (NDAs) demonstrating safety before marketing. Since that time, the agency has become aware that certain other excipients used in commerce can cause serious toxicities in consumers of prescription and over-the-counter (OTC) drug products in the United States and other countries.

Some of the information used in developing this guidance was obtained during meetings involving the International Pharmaceutical Excipients Council, the United States Pharmacopeia, and the International Conference on Harmonisation. On October 2, 2002 (67 FR 61910), FDA announced the availability of a draft version of this guidance entitled ''Nonclinical Studies for Development of Pharmaceutical Excipients.'' A number of comments were received, and the agency considered them carefully as it finalized the guidance.

This guidance describes the types of toxicity data that the agency uses in determining whether a potential new excipient is safe for use in human pharmaceuticals. It discusses recommended safety evaluations for excipients proposed for use in OTC and generic drug products, and describes testing strategies for pharmaceuticals proposed for short-term, intermediate, and long-term use. It also describes recommended excipient toxicity testing for pulmonary, injectable, and topical pharmaceuticals.

This guidance is being issued consistent with FDA's good guidance practices regulation (21 CFR 10.115). The guidance represents the agency's current thinking on nonclinical studies for the safety evaluation of pharmaceutical excipients. It does not create or confer any rights for or on any person and does not operate to bind FDA or the public. An alternative approach may be used if such approach satisfies the requirements of the applicable statutes and regulations.

II. Comments

Interested persons may submit to the Division of Dockets Management (see **ADDRESSES**) written or electronic comments on the guidance at any time. Submit a single copy of electronic comments or two paper copies of mailed comments, except that individuals may submit one paper copy. Comments are to be identified with the docket number found in brackets in the heading of this document. The guidance and received comments are available for public examination in the Division of Dockets Management between 9 a.m. and 4 p.m., Monday through Friday.

III. Electronic Access

Persons with access to the Internet may obtain the document at *http://www.fda.gov/cder/guidance/index.htm*, *http://www.fda.gov/cber/guidelines.htm*, or *http://www.fda.gov/ohrms/dockets/default.htm*.

Dated: May 12, 2005.

Jeffrey Shuren,

Assistant Commissioner for Policy.

[FR Doc. 05–9957 Filed 5–18–05; 8:45 am]

BILLING CODE 4160–01–S

DEPARTMENT OF HOMELAND SECURITY

Coast Guard

[USCG–2005–21187]

Identity Security and Modernization of the Merchant Mariner Credential Statutes

AGENCY: Coast Guard, DHS.

ACTION: Notice of public meeting and request for comments.

SUMMARY: The Coast Guard believes that identity verification is a critical element of port security, recognizing that we must know and trust those who are provided unescorted access to our port facilities and vessels. The Coast Guard will hold a public meeting to accept comments concerning the President's proposal to implement the recommendations of the 9/11 Commission Report in the area of Merchant Mariner Credentials and to modernize these statutes (hereinafter referred to as ''the proposal''). The proposal may be viewed in the docket for this notice. The Coast Guard also seeks written comments on the proposal.

DATES: The public meeting will be held on Friday, June 17, 2005, from 9 a.m. to 5 p.m. This meeting may close early if all business is finished. Members of the public who desire to make an oral statement may sign up on the day of the meeting. Written comments and related material must reach the Docket Management Facility on or before June 29, 2005.

ADDRESSES: The public meeting will be held in the Gallery Ballroom of the Arlington Hilton Hotel, 950 North Stafford Street, Arlington, VA 22203. Further directions regarding the location of the Arlington Hilton may be obtained by phoning (703) 528–6000.

You may submit written comments identified by Coast Guard docket number USCG–2005–21187 to the Docket Management Facility at the U.S. Department of Transportation. To avoid duplication, please use only one of the following methods:

(1) Web Site: *http://dms.dot.gov.*

(2) Mail: Docket Management Facility, U.S. Department of Transportation, 400 Seventh Street, SW., Washington, DC 20590–0001.

(3) Fax: 202–493–2251.

(4) Delivery: Room PL–401 on the Plaza level of the Nassif Building, 400 Seventh Street, SW., Washington, DC, between 9 a.m. and 5 p.m., Monday through Friday, except Federal holidays. The telephone number is 202–366–9329.

(5) Federal e-Rulemaking Portal: *http://www.regulations.gov.*

FOR FURTHER INFORMATION CONTACT: If you have questions on this notice, call or e-mail mark Gould of the Coast Guard at (202) 267–6890 (*mgould@comdt.uscg.mil*) or Gerald Miante of the Coast Guard at (202) 267–0221 (*gmiante@comdt.uscg.mil).* If you have questions on viewing or submitting materials to the docket, call Andrea M. Jenkins, Program Manager, Dockets Operations, telephone 202–366–0271.

SUPPLEMENTARY INFORMATION: We encourage you to submit comments concerning identity security and modernization of the Merchant Mariner Credential Statutes in the five areas identified below under Agenda. All comments received will be posted, without change, to *http://www.dms.dot.gov* and will include any personal information you have provided. We have an agreement with the Department of Transportation (DOT) to use the Docket Management Facility. Please see DOT's ''Privacy Act'' paragraph below.

Submitting comments: If you submit a comment, please include your name and address, identify the docket number for this rulemaking (USCG–2005–21187), indicate the specific provision of the proposal to which each comment applies, and give the reason for each comment. You may submit your comments and material by electronic means, mail, fax, or delivery to the Docket Management Facility at the address under **ADDRESSES**; but please submit your comments and material by only one means. If you submit them by mail or delivery, submit them in an unbound format, no larger than 8½ by 11 inches, suitable for copying and electronic filing. If you submit them by mail and would like to know that they reached the Facility, please enclose a stamped, self-addressed postcard or envelope. We will consider all comments received during the comment period.

Viewing comments and documents: To view the proposal, comments, or any other documents mentioned elsewhere in this notice as being available in the docket, go to *http://dms.dot.gov* at any time and conduct a simple search using the docket number. You may also visit the Docket Management Facility in room PL–401 on the Plaza level of the Nassif Building, 400 Seventh Street SW., Washington, DC, between 9 a.m. and 5 p.m., Monday through Friday, except Federal holidays.

Privacy Act: Anyone can search the electronic form of all comments received into any of our dockets by the name of the individual submitting the comment (or signing the comment, if submitted on behalf of an association, business, labor union, etc.). You may review the Department of Transportation's Privacy Act Statement in the **Federal Register** published on April 11, 2000 (65 FR 19477), or you may visit *http://dms.dot.gov.*

Agenda of meeting on June 17, 2005: Under current law, merchant mariners' documents issued by the Coast Guard serve as a form of government issued identification. Yet, some of these credentials contain limited identifying information and are relatively easy to forge. The President's proposal to implement the recommendations of the 9/11 Commission Report in the area of Merchant Mariner Credentials represents an update and rationalization of the Coast Guard's antiquated mariner credentialing and suspension and revocation authorities. It takes into account the findings and recommendations of the 9/11 Commission Regarding the importance of preventing terrorists from obtaining, and using, government identification cards. It is an important component of the Coast Guard's effort to instill a culture of security within a system previously focused almost exclusively on safety efficiency.

This proposal also enhances the Coast Guard's ability to be flexible and agile in establishing appropriate criteria and processes for issuing merchant mariner credentials and in recovering them from unqualified holders or those who present a significant security risk. This public meeting is intended to collect comments from any interested person or organization on the President's proposal (which may be viewed in the docket for this notice).

After a short introduction, the public will be invited to provide oral comments in the following topic areas:

1. *Homeland Security*—The 9/11 Commission found that terrorists used government-issued identification to facilitate their attacks upon the United States. The Commission recommended that the security of such forms of identification be enhanced. Congress responded by enacting laws requiring that security be considered by credentialing agencies, for example, the Maritime Transportation Security Act, Section 102 (46 U.S.C. 70105) and the Coast Guard and Maritime Transportation Act, Section 407 (46 U.S.C. 7703). This proposal continues to apply those existing authorities in the reorganized new chapters while providing flexibility to respond to developing security threats.

2. *Modernization*—The existing statutes contain numerous outdated, obsolete and confusing provisions, for example, in § 7313 the ''coal passer'' rating and in § 7306 six separate classifications of ''able seaman''. The proposal eliminates this antiquated and redundant terminology and improves the Coast Guard's ability to administer the credentialing statutes for the benefit of mariners. As the industry evolves, the proposal will allow us to respond with appropriate training and qualification requirements for mariners in the future.

3. *Organization*—The proposal replaces the current five chapters of Title 46, which randomly intermingle credentialing requirements, with two chapters, one on issuance and one on suspension and revocation of credentials. We believe this will be easier for mariners and other users of the code to understand and apply, as well as easier for the Coast Guard to administer.

4. *Clarification*—With limited exceptions, the proposal does not make substantive changes. It mostly clarifies existing law. At first glance, because of the comprehensive nature of the proposal, the language appears to change much. However, on closer reading, it is clear that the existing authorities are unchanged. For example, at first reading the proposal may appear to eliminate licenses and merchant mariner documents (MMDs) replacing them with ''merchant mariner credentials''. In fact, however, the proposal defines ''merchant mariner credentials'' to include both licenses and MMDs thereby preserving the Coast Guard's authority to continue issuing both while adding the flexibility to integrate these documents with the Transportation Workers Identification Credential (TWIC) and other future, secure-credentialing efforts. The Coast Guard did not intend to alter or affect the rights, benefits or duties of any credentialed merchant mariner. Instead, the proposal is intended to clarify, consolidate, add flexibility and increase the effectiveness of the statute. We do not anticipate, or plan to, make any immediate changes to the existing credentials or the regulations, procedures and processes governing merchant mariner credentialing based on the proposal. The Coast Guard will continue working with mariners, industry and the public to improve the

administration of the merchant mariner credentialing program.

5. *Harmonization*—Organizations such as the International Maritime Organization (IMO) have undertaken comprehensive efforts concerning safety and security in the maritime arena. These efforts include the Standards of Training, Certification and Watchkeeping (STCW), and the International Ship and Port Facility Security Code (ISPS). Many of these initiatives have been spearheaded by the United States. The proposal seeks to harmonize the credentialing statutes with these efforts and improve our ability to implement both ongoing and future standards.

Procedural: This meeting is open to the public. Please note that the meeting may close early if all business is finished. The facilitator of the meeting has the discretion to limit the amount of time allocated to each commenter based on the total number of persons requesting to make oral comments.

Information on services for individuals with disabilities: For information on facilities or services for individuals with disabilities or to request special assistance at the meeting, contact Mr. Gould as soon as possible.

Dated: May 6, 2005.

Howard L. Hime,

Acting Director of Standards, Marine Safety, Security and Environmental Protection.

[FR Doc. 05–9936 Filed 5–18–05; 8:45 am]

BILLING CODE 4910–15–M

DEPARTMENT OF HOUSING AND URBAN DEVELOPMENT

[Docket No. FR–4922–N–08]

Privacy Act of 1974; Notice of a Computer Matching Program

AGENCY: Office of the Chief Information Officer, HUD.

ACTION: Notice of a computer matching program—HUD and the United States Department of Agriculture (USDA).

SUMMARY: In accordance with the Privacy Act of 1974 (5 U.S.C. 552a), as amended by the Computer Matching and Privacy Protection Act of 1988, as amended, (Pub. L. 100–503), and the Office of Management and Budget (OMB) Guidelines on the Conduct of Matching Programs (54 FR 25818; June 19, 1989), and OMB Bulletin 89–22, ''Instructions on Reporting Computer Matching Programs to the Office of Management (OMB), Congress and the Public,'' HUD is issuing a public notice of its intent to conduct a recurring computer matching program with the USDA to utilize a computer information system of HUD, the Credit Alert Interactive Voice Response System (CAIVRS), with USDA's debtor files. In addition to HUD's data, the CAIVRS database includes delinquent debt information from the Departments of Education, Veterans Affairs, Justice and the Small Business Administration. This match will allow prescreening of applicants for debts owed or loans guaranteed by the Federal government to ascertain if the applicant is delinquent in paying a debt owed to or insured by the Federal government for HUD or USDA direct or guaranteed loans.

Before granting a loan, the lending agency and/or the authorized lending institution will be able to interrogate the CAIVRS debtor file which contains the Social Security Numbers (SSNs) of HUD's delinquent debtors and defaulters and defaulted debtor records of the USDA and verify that the loan applicant is not in default or delinquent on direct or guaranteed loans of participating Federal programs of either agency. As a result of the information produced by this match, the authorized users may not deny, terminate, or make a final decision of any loan assistance to an applicant or take other adverse action against such applicant, until an officer or employee of such agency has independently verified such information.

DATES: *Effective Date:* Computer matching is expected to begin on June 20, 2005, unless comments are received which will result in a contrary determination, or 40 days from the date a computer matching agreement is signed, whichever is later.

Comments Due Date: June 20, 2005.

ADDRESSES: Interested persons are invited to submit comments regarding this notice to the Rules Docket Clerk, Office of General Counsel, Room 10276, Department of Housing and Urban Development, 451 Seventh Street, SW., Washington, DC 20410. Communications should refer to the above docket number and title. A copy of each communication submitted will be available for public inspection and copying between 8 a.m. and 5 p.m. weekdays at the above address.

FOR FURTHER INFORMATION CONTACT: *From Recipient Agency:* Jeanette Smith, Departmental Privacy Act Officer, Department of Housing and Urban Development, 451 7th Street, SW., Room P8202, Washington, DC 20410, telephone number (202) 708–2374 or FAX (202) 708–3135. (These are not toll-free numbers.)

From Source Agency: Joyce Baumgartner, Debt/Credit Management Coordinator, Department of Agriculture, 14th and Independence Avenue, SW., Washington, DC 20250, telephone number (202) 720–1168. (This is not a toll-free number.)

Reporting of Matching Program: In accordance with Public Law 100–503, the Computer Matching and Privacy Protection Act of 1988, as amended, and Office of Management and Budget Bulletin 89–22, ''Instructions on Reporting Computer Matching Programs to the Office of Management and Budget (OMB), Congress and the Public;'' copies of this notice and report are being provided to the Committee on Government Reform of the House of Representatives, the Committee on Homeland Security and Governmental Affairs of the Senate, and the Office of Management and Budget.

Authority: The matching program will be conducted pursuant to Public Law 100–503, ''The Computer Matching and Privacy Protection Act of 1988,'' as amended, and Office of Management and Budget (OMB) Circular A–129 (Revised January 1993), Policies for Federal Credit Programs and Non-Tax Receivables. One of the purposes of all Executive departments and agencies—including HUD—is to implement efficient management practices for Federal credit programs. OMB Circular A–129 was issued under the authority of the Budget and Accounting Act of 1921, as amended; the Budget and Accounting Act of 1950, as amended; the Debt Collection Act of 1982, as amended; and, the Deficit Reduction Act of 1984, as amended.

Objectives To Be Met By The Matching Program: The matching program will allow USDA access to a system which permits prescreening of applicants for loans owed or guaranteed by the federal government to ascertain if the applicant is delinquent in paying a debt owed to or insured by the Government. In addition, HUD will be provided access to USDA debtor data for prescreening purposes.

Records To Be Matched: HUD will utilize its system of records entitled HUD/DEPT–2,

Accounting Records. The debtor files for HUD programs involved are included in this system of records. HUD's debtor files contain information on borrowers and co-borrowers who are currently in default) at least 90 days delinquent on their loans); or who have any outstanding claims paid during the last three years on Title II insured or guaranteed home mortgage loans; or individuals who have defaulted on Section 312 rehabilitation loans; or

individuals who have had a claim paid in the last three years on a Title I loan. For the CAIVRS match, HUD/DEPT–2, System of Records, receives its program inputs from HUD/DEPT–28, Property Improvement and Manufactured (Mobile) Home Loans—Default; HUD/DEPT–32, Delinquent/Default/Assigned Temporary Mortgage Assistance Payments (TMAP) Program; and HUD/CPD–1, Rehabilitation Loans-Delinquent/Default. The USDA will provide HUD with debtor files contained in its system of records entitled, Applicant/Borrower or Grantee File (USDA/FmHA–1). HUD is maintaining USDA's records only as a ministerial action on behalf of USDA, not as a part of HUD's HUD/DEPT–2 system of records. USDA's data contain information on individuals who have defaulted on their guaranteed loans. The USDA will retain ownership and responsibility for their system of records that they place with HUD. HUD serves only as a record location and routine use recipient for USDA's data.

Notice Procedures: HUD and the USDA will notify individuals at the time of application (ensuring that routine use appears on the application form) for guaranteed or direct loans that their records will be matched to determine whether they are delinquent or in default on a federal debt. HUD and the USDA will also publish notices concerning routine use disclosures in the **Federal Register** to inform individuals that a computer match may be performed to determine a loan applicant's credit status with the federal government.

Categories of Records/Individuals Involved: The debtor records include these data elements: SSN, claim number, program code, and indication of indebtedness. Categories of records include: Records of claims and defaults, repayment agreements, credit reports, financial statements, and records of foreclosures. Categories of individuals include: former mortgagors and purchasers of HUD-owned properties, manufactured (mobile) home and home improvement loan debtors who are delinquent or in default on their loans, and rehabilitation loan debtors who are delinquent or in default on their loans.

Period Of The Match: Matching is expected to begin at least 40 days from the date copies of the signed (by both Data Integrity Boards) computer matching agreements are sent to both Houses of Congress or at least 30 days from the date this notice is published in the **Federal Register**, whichever is later, providing no comments are received which would result in a contrary determination. The matching program will be in effect and continue for 18 months with an option to renew for 12 additional months unless one of the parties to the agreement advises the other in writing to terminate or modify the agreement.

Dated: May 11, 2005.

Lisa Schlosser,

Chief Information Officer.

[FR Doc. E5–2507 Filed 5–18–05; 8:45 am]

BILLING CODE 4210–27–P

DEPARTMENT OF THE INTERIOR

Fish and Wildlife Service

Information Collection Renewal To Be Submitted to the Office of Management and Budget (OMB) for Approval Under the Paperwork Reduction Act; OMB Control No. 1018–0100; Grants Programs Authorized by the North American Wetlands Conservation Act (NAWCA)

AGENCY: Fish and Wildlife Service, Interior.

ACTION: Notice; request for comments.

SUMMARY: We (Fish and Wildlife Service, Service) plan to submit the collection of information described below to OMB for approval under the provisions of the Paperwork Reduction Act of 1995. We use the information collected to conduct our NAWCA grants programs in the manner prescribed by that Act, the Migratory Bird Conservation Commission, and the North American Wetlands Conservation Council. We also use the information to comply with Federal reporting requirements for grants awarded under the program.

DATES: You must submit comments on or before July 18, 2005.

ADDRESSES: Send your comments on the information collection to Hope Grey, Information Collection Clearance Officer, Fish and Wildlife Service, MS 222–ARLSQ, 4401 N. Fairfax Drive, Arlington, VA 22203 (mail); *hope_grey@fws.gov* (e-mail); or (703) 358–2269 (fax).

FOR FURTHER INFORMATION CONTACT: To request a copy of the information collection requirements or explanatory information, contact Hope Grey, Information Collection Clearance Officer, at the above addresses or by telephone at (703) 358–2482. For information related to the grant program, which is the subject of the information collection approval, please visit our Web site at *http://birdhabitat.fws.gov*.

SUPPLEMENTARY INFORMATION: The OMB regulations at 5 CFR part 1320, which implement provisions of the Paperwork Reduction Act of 1995 (44 U.S.C 3501 *et seq.*), require that interested members of the public and affected agencies have an opportunity to comment on information collection and recordkeeping activities (see 5 CFR 1320.8(d)). We will ask OMB to renew approval of the collection of information for the NAWCA grants programs. The current OMB control number for this collection of information is 1018–0100, which expires on August 31, 2005. We will request a 3-year term of approval for this information collection activity. Federal agencies may not conduct or sponsor and a person is not required to respond to a collection of information unless it displays a currently valid OMB control number.

The North American Waterfowl Management Plan (NAWMP), first signed in 1986, is a tripartite agreement among Canada, Mexico, and the United States to enhance, restore, and otherwise protect continental wetlands to benefit waterfowl and other wetlands-associated wildlife through partnerships between and among the private and public sectors. Because the 1986 NAWMP did not carry with it a mechanism to provide for broadly based and sustained financial support for wetland conservation activities, Congress passed and the President signed into law the NAWCA. The purpose of NAWCA, as amended, is to promote, through partnerships, long-term conservation of North American wetland ecosystems and the waterfowl and other migratory birds, fish, and wildlife that depend upon such habitat. Principal conservation actions supported by NAWCA are acquisition, enhancement, and restoration of wetlands and wetlands-associated habitat.

In addition to providing for a continuing and stable funding base, NAWCA establishes an administrative body, the North American Wetlands Conservation Council, made up of a State representative from each of the four flyways, three representatives from wetlands conservation organizations, the Secretary of the Board of the National Fish and Wildlife Foundation, and the Director of the Service. This Council is exempt from the requirements of the Federal Advisory Committee Act. The Council recommends funding of select wetlands conservation project proposals to the Migratory Bird Conservation Commission (MBCC). Competing for grant funds involves applications from partnerships that describe in substantial

detail project locations, project resources, future benefits, and other characteristics, to meet the standards established by the Council and the requirements of NAWCA.

The Council Coordinator's office no longer publishes or distributes standard and small grants instructional booklets. Materials that describe the program and assist applicants in formulating project proposals for Council consideration are available on our Web site at *http://birdhabitat.fws.gov*. Persons who do not have access to the Web site may still obtain instructional materials by mail. There has been virtually no change in the scope and general nature of these instructions since the OMB first approved the information collection in 1999. Instructions assist applicants in formulating detailed project proposals for Council consideration. The instructional materials, including any hard or electronic copy and information or other instruments and **Federal Register** notices on requests for proposals, are the basis for this information collection request. Notices of funding availability are posted annually on the Grants.gov Web site (*http://www.grants.gov*) as well as in the Catalog of Federal Domestic Assistance. We use information collected under this program to respond to such needs as audits, program planning and management, program evaluation, Government Performance and Results Act reporting, Standard Form 424 (Application For Federal Assistance), grant agreements, budget reports and justifications, public and private requests for information, data provided to other programs for databases on similar programs, congressional inquiries, and reports required by NAWCA.

If the information were not collected, we would have to eliminate the program because it would not be possible to determine eligibility and the relative worth of the proposed projects. Reducing the frequency of collection would only reduce the frequency of windows for grant opportunities as the information collected is unique to each project proposal. Discontinuation of the program is not a viable option.

Title: Grants Programs Authorized by the North American Wetlands Conservation Act.

OMB Control Number: 1018–0100.

Form Number(s): None.

Frequency of Collection: Occasional. The Small Grants program has one project proposal period per year and the Standard Grants program has two per year. Annual reports are due 90 days after the anniversary date of the grant agreement. Final reports are due 90 days after the end of the project period. The project period is 2 years.

Description of Respondents: Households and/or individuals; businesses and/or other for-profits organizations; not-for-profit institutions; farms; Federal Government; and State, local and/or tribal governments.

Total Annual Burden Hours: 37,600. We estimate 80 hours for each Small Grant and 400 hours for each Standard Grant.

Number of Respondents: Approximately 150. We estimate 70 proposals for the Small Grants program and 80 for the Standard Grants program. Approximately half of the projects submitted are funded.

We interviewed five previous and current recipients of NAWCA grants with regard to three aspects of the grants programs; *i.e.*, the availability of the information requested, the clarity of the instructions, and the annual burden hours for preparing applications and other materials, such as annual and final reports for both the Small Grants and the Standard Grants programs. All respondents advised that the information regarding descriptions of both programs and application instructions are readily available and the clarity of the information/instructions for both programs is good, even considering the level of detail and technical information required in the Standard Grants program application. Two of the three respondents who have had experience with the Small Grants program estimate 7 days (56 hours) to prepare an application, while the third respondent estimates 3 to 4 weeks (120 to 160 hours). Of course, an important factor determining this estimate is the complexity of the project. However, none of these estimates included the time involved in documentation of progress (providing annual and final reports, deeds, letters of fair market value, etc.) required during the course of the project. Thus, pending possible further refinement from responses in this notice, our original estimate of 80 hours is considered reasonable. With regard to Standard Grants, three respondents estimated 200 to 250 hours, 320 hours and 400 hours for the processes leading up to and including writing the application. Again, these estimates do not include the writing of annual and final reports and providing documentation of activities. It is very likely that the additional burden hours would increase in a way that would allow the 400-hour figure to continue to be used as a reasonable estimate. Some of the respondents offered that any time estimates could not possibly take into consideration factors that vary from project to project, such as technical competence, repetitive practice (applications), complexity of the project, and/or the level of grantsmanship that an applicant's grant writer may have invested in the application. Thus, it is very difficult to make meaningful estimates of annual burden hour estimates for application preparation, especially for Standard Grants. Some of the respondents indicated that the likelihood of success for funding is independent of the effort at any burden hour.

We invite your comments on: (1) Whether or not the collection of information is necessary for the proper performance of the NAWCA grants programs, including whether or not in the opinion of the respondent the information has practical utility; (2) the accuracy of our estimate of the annual hour burden of information requested; (3) ways to enhance the quality, utility and clarity of the information to be collected; and (4) ways to minimize the burden of the collection of information on respondents. The information collection in this program is part of a system of records covered by the Privacy Act (5 U.S.C. 552(a)).

Dated: May 2, 2005.

Hope Grey,

Information Collection Clearance Officer, Fish and Wildlife Service.

[FR Doc. 05–9947 Filed 5–18–05; 8:45 am]

BILLING CODE 4310–55–P

DEPARTMENT OF THE INTERIOR

Fish and Wildlife Service

Receipt of Applications for Endangered Species Permits

AGENCY: Fish and Wildlife Service, Interior.

ACTION: Notice.

SUMMARY: The public is invited to comment on the following applications to conduct certain activities with endangered species. We provide this notice pursuant to section 10(c) of the Endangered Species Act of 1973, as amended (16 U.S.C. 1531 *et seq.*).

DATES: We must receive written data or comments on these applications at the address given below, by June 20, 2005.

ADDRESSES: Documents and other information submitted with these applications are available for review, subject to the requirements of the Privacy Act and Freedom of Information Act, by any party who submits a written request for a copy of such documents to the following office within 30 days of the date of publication of this notice:

U.S. Fish and Wildlife Service, 1875 Century Boulevard, Suite 200, Atlanta, Georgia 30345 (Attn: Victoria Davis, Permit Biologist).

FOR FURTHER INFORMATION CONTACT: Victoria Davis, telephone 404/679–4176; facsimile 404/679–7081.

SUPPLEMENTARY INFORMATION: The public is invited to comment on the following applications for permits to conduct certain activities with endangered and threatened species. If you wish to comment, you may submit comments by any one of the following methods. You may mail comments to the Service's Regional Office (see **ADDRESSES** section) or via electronic mail (e-mail) to *''victoria_davis@fws.gov''*. Please submit electronic comments as an ASCII file avoiding the use of special characters and any form of encryption. Please also include your name and return address in your e-mail message. If you do not receive a confirmation from the Service that we have received your e-mail message, contact us directly at the telephone number listed above (see **FOR FURTHER INFORMATION CONTACT** section). Finally, you may hand deliver comments to the Service office listed above (see **ADDRESSES** section).

Our practice is to make comments, including names and home addresses of respondents, available for public review during regular business hours. Individual respondents may request that we withhold their home address from the administrative record. We will honor such requests to the extent allowable by law. There may also be other circumstances in which we would withhold from the administrative record a respondent's identity, as allowable by law. If you wish us to withhold your name and address, you must state this prominently at the beginning of your comments. However, we will not consider anonymous comments. We will make all submissions from organizations or businesses, and from individuals identifying themselves as representatives or officials of organizations or businesses, available for public inspection in their entirety.

Applicant: Round Mountain Biological & Environmental Studies, Inc., Peggy A. Measel, TE102292–0.

The applicant requests authorization to take (capture, identify, release) the following species: gray bat (*Myotis grisescens*) and Indiana bat (*Myotis sodalis*). The proposed activities would take place while conducting presence/absence surveys in proposed mining areas throughout the state of Tennessee.

Dated: April 25, 2005.

Cynthia K. Dohner,

Acting Regional Director.

[FR Doc. 05–9985 Filed 5–18–05; 8:45 am]

BILLING CODE 4310–55–P

DEPARTMENT OF THE INTERIOR

Fish and Wildlife Service

Draft Comprehensive Conservation Plan and Environmental Impact Statement for the Driftless Area National Wildlife Refuge: Allamakee, Clayton, Delaware, Dubuque and Jackson Counties, IA; Grant and Richland Counties, WI; and Jo Daviess County, IL

AGENCY: Fish and Wildlife Service, Interior.

ACTION: Notice of availability.

SUMMARY: The U.S. Fish and Wildlife Service announces that the Draft Comprehensive Conservation Plan (CCP), Environmental Impact Statement (EIS) and Land Protection Plan is available for Driftless Area National Wildlife Refuge (NWR) in Illinois, Iowa, and Wisconsin.

The CCP was prepared pursuant to the National Wildlife Refuge System Administration Act of 1966, as amended by the National Wildlife Refuge System Improvement Act of 1997, and the National Environmental Policy Act of 1969. Goals and objectives in the CCP describe how the agency intends to manage the refuge over the next 15 years.

DATES: Comments on the Draft CCP/EIS must be received on or before July 22, 2005.

ADDRESSES: Copies of the Draft CCP/EIS are available on compact disk or hard copy. You may access and download a copy via the planning Web site *(http://fws.gov/midwest/planning/DriftlessArea/index.html)* or you may obtain a copy by writing to the following address: U.S. Fish and Wildlife Service, Division of Conservation Planning, Bishop Henry Whipple Federal Building, 1 Federal Drive, Fort Snelling, Minnesota 55111.

All comments should be addressed to Driftless Area National Wildlife Refuge, Attention: CCP Comment, P.O. Box 460, McGregor, Iowa 55987 or direct e-mail to *r3planning@fws.gov.* Comments may also be submitted through the Service's regional Web site at *http://fws.gov/midwest/planning/*

FOR FURTHER INFORMATION CONTACT: John Lindell or Cathy Henry at (563) 873–3423.

SUPPLEMENTARY INFORMATION: The Driftless Area National Wildlife Refuge was established in 1989 to protect habitat for the threatened northern monkshood plant and endangered Iowa Pleistocene snail. The Refuge was authorized to acquire land in eight counties of northeast Iowa, northwest Illinois, and southwest Wisconsin. The Refuge is situated within the driftless geologic land form, an area never glaciated or missed by the most recent glacial advance.

Refuge land conservation focuses on conservation of algific (cold producing) talus slope systems, a landform/habitat feature unique to karst terrain that provides cold microclimate required by northern monkshood, Pleistocene snails, and other glacial relict species. Refuge land conservation consists of acquisition and management easements. Driftless Area NWR now consists of 781 acres within nine units in four northeastern Iowa counties. The Draft CCP/EIS preferred alternative, and integrated Draft Land Protection Plan, proposes conservation of additional lands (through fee title purchase from willing sellers, or other means, such as management easements) in the counties initially authorized, and proposes conservation of suitable habitat in five additional counties in Iowa, four additional counties in Wisconsin, and five counties in Minnesota. Additional information about the target species gained since listing, and the listing of Leedy's roseroot, which occupies similar habitat in southeast Minnesota, indicate the need to increase the geographic area of conservation.

The plan addresses four primary issues identified by the public and Refuge: (1) Habitat management; (2) visitor services; (3) refuge expansion; and (4) species assessments. The EIS evaluates three alternatives for future management of the Driftless Area NWR. The preferred alternative calls for ultimately acquiring 6,000 additional acres. Over the next 15 years we would permanently conserve 2,275 of these acres within 22 counties in Iowa, Illinois, Minnesota, and Wisconsin. Under the preferred alternative we would achieve endangered species recovery and conservation of other species of concern, multiple recovery goals for delisting of the Iowa Pleistocene snail through increased habitat management, and a carefully monitored increase in environmental education and wildlife observation programs.

The National Wildlife Refuge System Administration Act of 1966, as amended by the National Wildlife Refuge System Improvement Act of 1997 (16 U.S.C.

668dd–668ee *et seq*) requires the Service to develop a CCP for each National Wildlife Refuge. The purpose in developing a CCP is to provide refuge managers with a 15-year strategy for achieving refuge purposes and contributing toward the mission of the National Wildlife Refuge System, consistent with sound principles of fish and wildlife management, conservation, legal mandates, and Service policies. In addition to outlining broad management direction for conserving wildlife and their habitats, the CCP identifies wildlife-dependent recreational opportunities available to the public, including opportunities for hunting, fishing, wildlife observation and photography, and environmental education and interpretation. We will review and update these CCPs at least every 15 years in accordance with the National Wildlife Refuge System Administration Act of 1966, as amended by the National Wildlife Refuge System Improvement Act of 1997, and the National Environmental Policy Act of 1969 (42 U.S.C. 4321–4370d).

Dated: March 7, 2005.

Charles M. Wooley,

Acting Regional Director, U.S. Fish and Wildlife Service, Ft. Snelling, Minnesota.

[FR Doc. 05–9986 Filed 5–18–05; 8:45 am]

BILLING CODE 4310–55–P

DEPARTMENT OF THE INTERIOR

Fish and Wildlife Service

Notice of Receipt of Application for Approval

AGENCY: Fish and Wildlife Service, Interior.

ACTION: Notice of receipt of application for approval.

SUMMARY: The public is invited to comment on the following application for approval to conduct certain activities with birds that are protected in accordance with the Wild Bird Conservation Act of 1992. This notice is provided pursuant to Section 112(4) of the Wild Bird Conservation Act of 1992, 50 CFR 15.26(c).

DATES: Written data, comments, or requests for a copy of this complete application must be received by June 20, 2005.

ADDRESSES: Written data, comments, or requests for a copy of this complete application should be sent to the Chief, U.S. Fish and Wildlife Service, Division of Management Authority, 4401 North Fairfax Drive, Room 700, Arlington, Virginia 22203.

FOR FURTHER INFORMATION CONTACT: Andrea Gaski, Chief, Branch of Operations, Division of Management Authority, at 703–358–2095.

SUPPLEMENTARY INFORMATION: *Applicant:* Dr. Susan L. Clubb of Loxahatchee, Florida.

The applicant wishes to establish a cooperative breeding program for blue-eyed cockatoo (Cacatua ophthalmica). The applicant wishes to be an active participant in this program along with three other individuals. The American Federation of Aviculture, Inc. has agreed to assume oversight responsibility of this program if it is approved.

Documents and other information submitted with this application are available for review, *subject to the requirements of the Privacy Act and Freedom of Information Act*, by any party who submits a written request for a copy of such documents to the following office within 30 days of the date of publication of this notice.

Dated: May 6, 2005.

Mark Albert,

Acting Chief, Branch of CITES Operations, Division of Management Authority.

[FR Doc. 05–10001 Filed 5–18–05; 8:45 am]

BILLING CODE 4310–55–P

DEPARTMENT OF THE INTERIOR

Bureau of Indian Affairs

Indian Child Welfare Act; Receipt of Designated Tribal Agents for Service of Notice; Addendum

AGENCY: Bureau of Indians Affairs, Interior.

ACTION: Notice; addendum.

SUMMARY: This notice is published in exercise of authority delegated by the Secretary of the Interior to the Principal Deputy Assistant Secretary—Indian Affairs by 209 DM 8.

The regulations implementing the Indian Child Welfare Act provide that Indian tribes may designate an agent other than the tribal chairman for service of notice of proceedings under the Act, 25 CFR 23.12. The Secretary of the Interior shall publish in the **Federal Register** on an annual basis the names and addresses of the designated agents.

This is an addendum to the Designated Tribal Agents for service of notice published on March 21, 2005 (70 FR 13518), which included the listings of designated tribal agents received by the Secretary of the Interior with the exception of the Southern Plains Region, which was inadvertently omitted. This notice publishes the designated agent list of the Southern Plains Region only.

FOR FURTHER INFORMATION CONTACT: Evangeline M. Campbell, Indian Child Welfare Supervisory Social Worker, Bureau of Indian Affairs, Division of Social Services, 1951 Constitution Avenue, NW., Mail Stop 320–SIB, Washington, DC 20240–0001; telephone: (202) 513–7623.

Dated: May 6, 2005.

Michael D. Olsen,

Principal Deputy Assistant Secretary—Indian Affairs.

Southern Plains Region

Regional Director, 11/2 mile North Highway 281, P.O. Box 368, Anadarko, OK 73005; Phone: (405) 247–6673, Ext. 314; Fax: (405) 247–5611.

WCD Office Complex, Retha Murdock, Regional Social Worker, P.O. Box 368, Anadarko, Oklahoma 73005; Phone: (405) 247–6673 Ext. 257 or (405) 247–1557; Fax: (405) 247–2895.

A

Absentee-Shawnee Tribe of Oklahoma Indians, Governor, 2025 S. Gordon Cooper Drive, Shawnee, Oklahoma 74801; Phone: (405) 275–4030.

Alabama-Coushatta Tribe of Texas, Chairperson, 571 State Park Road, #56, Livingston, Texas, 77351; Phone: (936) 563–4391. (Address has changed)

Apache Tribe of Oklahoma, Chairperson, P.O. Box 1220, Anadarko, Oklahoma 73005; Phone: (405) 247–9493.

C

Caddo Indian Tribe of Oklahoma, Chairperson, P.O. Box 487, Binger, Oklahoma 73009; Phone: (405) 656–2344.

Cheyenne-Arapaho Tribes of Oklahoma, Chairperson, P.O. Box 38, Concho, Oklahoma 73022; Phone: (405) 262–0345.

Citizen Potawatomi Nation, Chairperson, 1601 S. Gordon Cooper Drive, Shawnee, Oklahoma 74801; Phone: (405) 275–3121. (Address has changed)

Comanche Indian Tribe of Oklahoma, Chairperson, HC 32, Box 1720, Lawton, Oklahoma 73502; Phone: (580) 492–4988.

D

Delaware Tribe of Western Oklahoma, President, P.O. Box 825, Anadarko, Oklahoma 73005; Phone: (405) 247–2448.

F

Fort Sill Apache Tribe of Oklahoma, Chairperson, Route 2, Box 121, Apache, Oklahoma 73006; Phone: (580) 588–2298.

I

Iowa Tribe of Kansas, Chairperson, 3345 B. Thrasher Rd., White Cloud, Kansas 66094; Phone: (785) 595–3258. (Address has changed)

Iowa Tribe of Oklahoma, Chairperson, Route 1, Box 721, Perkins, Oklahoma 74059; Phone: (405) 547–2402.

K

Kaw Nation, Chairperson, Drawer 50, Kaw City, Oklahoma 74641; Phone: (580) 269–2552.

Kickapoo Traditional Tribe of Texas, Chairperson, HC 1, Box 9700, Eagle Pass, Texas 78852; Phone: (830) 773–2105.

Kickapoo Tribe of Indians of The Kickapoo Reservation in Kansas, Chairperson, P.O. Box 271, Horton, Kansas 66439; Phone: (785) 486–2131.

Kickapoo Tribe of Oklahoma, Chairperson, P.O. Box 70, McLoud, Oklahoma 74851; Phone: (405) 964–2075.

Kiowa Indian Tribe of Oklahoma, Chairperson, P.O. Box 369, Carnegie, Oklahoma 73015; Phone: (580) 654–2300.

O

Otoe-Missouria Tribe of Oklahoma, Chairperson, 8151 Highway 177, Red Rock, Oklahoma 74651; Phone: (580) 723–4466.

P

Pawnee Indian Tribe of Oklahoma, President, P.O. Box 470, Pawnee, Oklahoma 74058; Phone: (918) 762–3621.

Ponca Tribe of Indians of Oklahoma, Chairperson, 20 White Eagle Drive, Ponca City, Oklahoma, 74601; (580) 762–8104.

Prairie Band of Potawatomi Indians of Kansas, Chairperson, 16281 Q. Road, Mayetta, Kansas 66509; Phone: (785) 966–2255.

S

Sac and Fox of Missouri in Kansas, Chairperson, 305 N. Main St., Reserve, Kansas 66434; Phone: (785) 742–7471. (Change in designee title and in address.)

Sac and Fox Nation of Oklahoma, Principal Chief, Route 2, Box 246, Stroud, Oklahoma 74079; Phone: (918) 968–3526.

T

Tonkawa Tribe of Oklahoma, President, P.O. Box 70, Tonkawa, Oklahoma 74653; Phone: (580) 628–2561.

W

Wichita and Affiliated Tribes of Oklahoma, Indian Child Welfare, Coordinator, P.O. Box 729, Anadarko, Oklahoma, 73005; Phone: (405) 247–2425.

[FR Doc. 05–9940 Filed 5–18–05; 8:45 am]

BILLING CODE 4310–4J–P

DEPARTMENT OF THE INTERIOR

Minerals Management Service

Environmental Documents Prepared for Proposed Oil and Gas Operations on the Gulf of Mexico Outer Continental Shelf (OCS)

AGENCY: Minerals Management Service, Interior.

ACTION: Notice of the Availability of Environmental Documents. Prepared for OCS Mineral Proposals on the Gulf of Mexico OCS.

SUMMARY: Minerals Management Service (MMS), in accordance with Federal Regulations that implement the National Environmental Policy Act (NEPA), announces the availability of NEPA-related Site-Specific Environmental Assessments (SEA) and Findings of No Significant Impact (FONSI), prepared by MMS for the following oil and gas activities proposed on the Gulf of Mexico OCS.

FOR FURTHER INFORMATION CONTACT: Public Information Unit, Information Services Section at the number below. Minerals Management Service, Gulf of Mexico OCS Region, Attention: Public Information Office (MS 5034), 1201 Elmwood Park Boulevard, Room 114, New Orleans, Louisiana 70123–2394, or by calling 1–800–200–GULF.

SUPPLEMENTARY INFORMATION: MMS prepares SEAs and FONSIs for proposals that relate to exploration for and the development/production of oil and gas resources on the Gulf of Mexico OCS. These SEAs examine the potential environmental effects of activities described in the proposals and present MMS conclusions regarding the significance of those effects. Environmental Assessments are used as a basis for determining whether or not approval of the proposals constitutes major Federal actions that significantly affect the quality of the human environment in the sense of NEPA Section 102(2)(C). A FONSI is prepared in those instances where MMS finds that approval will not result in significant effects on the quality of the human environment. The FONSI briefly presents the basis for that finding and includes a summary or copy of the SEA.

This notice constitutes the public notice of availability of environmental documents required under the NEPA Regulations.

This listing includes all proposals for which the Gulf of Mexico OCS Region prepared a FONSI in the period subsequent to publication of the preceding notice.

Activity/operator	Location	Date
Exxon Mobil Corporation, Geological & Geophysical Exploration for Mineral Resources for Veritas Geophysical Company SEA T05–01.	Located in the western Gulf of Mexico east of Galveston, Texas.	1/19/2005
Pioneer Natural Resources USA, Inc., Structure Removal SEA ES/SR 05–001.	Brazos, Block A7, Lease OCS–G 04558, located 35 miles from the nearest Texas shoreline.	1/26/2005
Pioneer Natural Resources USA, Inc., Structure Removal SEA ES/SR 05–002.	Brazos, Block A39, Lease OCS–G 04559, located 38 miles from the nearest Texas shoreline.	1/27/2005
Shell Offshore, Inc., Initial Exploration Plan SEA N–8250	DeSoto Canyon, Blocks 486 and 487, OCS–G 25855 and OCS–G 25856, located 86 miles from the nearest Louisiana shoreline.	1/31/2005
Naval Research Laboratory, Geological & Geophysical Exploration Plan for Mineral Resources SEA L05–02.	Located in the central Gulf of Mexico south of Gulfport, Mississippi.	2/3/2005
Fugro McClelland Marine Geosciences, Inc., Geological & Geophysical Exploration Plan for Mineral Resources for Chevron Texaco SEA T05–03.	Located in the central Gulf of Mexico south of Mobile, Alabama, and east of Galveston, Texas.	2/4/2005
Fugro McClelland Marine Geosciences, Inc., Geological & Geophysical Exploration Plan for Mineral Resources for Chevron Texaco SEA T05–04.	Located in the central Gulf of Mexico south of Mobile, Alabama, and east of Galveston, Texas.	2/4/2005
Stone Energy Corporation, Structure Removal SEA ES/SR 93–043A.	East Cameron, Block 64, Lease OCS 00089, located 24 miles south of the nearest Louisiana shoreline.	2/10/2005
Apache Corporation, Structure Removal SEA ES/SR 05–003	Ship Shoal, Block 216, Lease OCS–G 01524, located 38 miles south of the nearest Louisiana shoreline.	2/10/2005
C & C Technologies, Inc., Geological & Geophysical Exploration Plan for BHP Billiton (Americas), Inc. SEA L05–007.	Located in the central Gulf of Mexico south of Fourchon, Louisiana.	2/22/2005
Stone Energy Corporation, Structure Removal SEA ES/SR 05–004.	Matagorda Island, Block 670, Lease OCS–G 21308, located 22 miles southeast from the nearest Calhoun County, Texas shoreline.	2/25/2005

Activity/operator	Location	Date
Apache Corporation, Structure Removal SEA ES/SR 05–005	Brazos, Block 494, Lease OCS–G 06071, located 17 miles from the nearest Texas shoreline.	2/28/2005
Chevron U.S.A., Inc., Structure Removal SEA ES/SR 05–006 ...	Viosca Knoll, Block 294, OCS–G 08778, located 38 miles from the nearest Louisiana shoreline.	3/1/2005
C & C Technologies, Inc., Geological & Geophysical Exploration Plan for BP America, Inc. SEA L05–08.	Located in the central Gulf of Mexico south of Fourchon, Louisiana.	3/3/2005
Newfield Exploration Company, Structure Removal SEA ES/SR 05–007.	West Cameron, Block 409, Lease OCS–G 03282, located 65 miles from the nearest Louisiana shoreline.	3/3/2005
ChevronTexaco Energy Technology Co, Geological & Geophysical Exploration for Mineral Resources or Scientific Research SEA L05–3, L05–4, L05–5.	Keathley Canyon, Block 151 (unleased), located 190 miles from the nearest Louisiana shoreline; and Atwater, Valley, Blocks 13 & 14, OCS–G 24203 & 25212, located 67 miles from the nearest Louisiana shoreline.	3/8/2005
Mariner Energy, Inc., Structure Removal Activity SEA ES/SR 05–012.	Brazos, Block 364, Lease OCS–G 07214, located 12 miles from the nearest Texas shoreline.	3/9/2005
BP Exploration & Production, Inc., Geological & Geophysical Exploration Plan for Veritas Geophysical Corporation SEA L05–09.	Located in the central Gulf of Mexico south of Fourchon, Louisiana.	3/9/2005
Union Oil Company of California, Structure Removal Activity SEA ES/SR 05–009, 05–010, 05–011.	South Marsh, Block 6, Lease OCS–G 01177, located 35 miles from the nearest Louisiana shoreline.	3/10/2005
Maritech Resources, Inc., Structure Removal SEA ES/SR 05–032.	East Cameron, Block 42, Lease OCS–G 02857, located 10 miles from the nearest Louisiana shoreline.	3/14/2005
Apache Corporation, Structure Removal SEA ES/SR 05–024	Brazos, Block 494, Lease OCS–G 06071, located 20 miles from the nearest Texas shoreline.	3/15/2005
GOM Shelf, LLC, Structure Removal SEA ES/SR 05–025, 05–026.	Matagorda Island, Blocks 620 & 638, Leases OCS–G 03087 & 06044, located 22 miles from the nearest Texas shoreline.	3/16/2005
GOM Shelf, LLC, Structure Removal SEA ES/SR 05–027 & 05–028.	Matagorda Island, Blocks 654 & 669, Leases OCS–G 04546 & 04065, located 20 miles from the nearest Texas shoreline.	3/16/2005
Tri-Union Development Corporation, Structure Removals SEA ES/SR 05–018, 05–019, 05–020, 05–021, 05–022, 05–023.	High Island, High Island (East Addition), High Island (East Addition South Extension) & Galveston; Blocks A126, A127, A129, A237, 261 & 211; Leases OCS–G RUE G 22046, OCS G 08562, OCS G 07306, RUE G 22047, RUE G 22045, OCS G 06097, located15 to 69 miles from the nearest Galveston shoreline.	3/17/2005
Apache Corporation, Structure Removal SEA ES/SR 05–029, 05–030, 05–031.	West Cameron, West Cameron (West Addition), Eugene Island, Blocks 144, 364 & 152, located 23 to 65 miles from the nearest Louisiana shoreline.	3/17/2005
W & T Offshore, Inc., Structure Removal SEA ES/SR 05–042 ...	Ewing Bank, Block 482, Lease OCS–G 19913, located 47 miles from the nearest Louisiana shoreline.	3/23/2005
Devon Louisiana Corporation, Structure Removal SEA ES/SR 05–008.	High Island (East Addition South Extension), Block A329, Lease OCS–G 15815, located 105 miles from the nearest Jefferson County, Texas shoreline.	3/23/2005
W & T Offshore, Inc., Structure Removal SEA 05–040, 05–041	West Cameron (South), Block 620, Lease OCS–G 02234, located 110 miles from the nearest Louisiana shoreline.	3/23/2005
GOM Shelf, LLC, Structure Removal SEA ES/SR 05–039	Matagorda Island, Block 620, Lease OCSG 03087, located 20 miles from the nearest Texas shoreline.	3/24/2005
Stone Energy Corporation, Structure Removal SEA ES/SR 05–035.	East Cameron, Block 34, Lease OCS–G 17834, located 5 miles from the nearest Louisiana shoreline.	3/29/2005
Murphy Exploration & Production Company, U.S.A., Structure Removal SEA ES/SR 05–033, 05–034.	Eugene Island (South), Blocks 322 & 323, Leases OCS–G 02113 & 15261, located 65 miles from the nearest Louisiana shoreline.	3/29/2005
W & T Offshore, Inc., Structure Removal SEA ES/SR 05–043 ...	South Pass (East), Block 72, Lease OCS–G 12079, located 10 miles from the nearest Louisiana shoreline.	3/29/2005
W & T Offshore, Inc., Structure Removal SEA ES/SR 05–046 ...	West Cameron (South), Block 554, Lease OCS–G 07629, located 95 miles from the nearest Louisiana shoreline.	3/29/2005
Virgin Offshore U.S.A., Inc., Structure Removal SEA ES/SR 05–044.	West Cameron, Block 151, Lease OCSG 17764, located 21 miles from the nearest Louisiana shoreline.	3/29/2005
Shell Offshore, Inc., Initial Exploration Plan SEA N–8315	DeSoto Canyon, Block 268, Lease OCS–G 23501, located 81 miles from the nearest Louisiana shoreline, 104 miles from the nearest Alabama shoreline, 110 miles from the nearest Mississippi shoreline, and 114 miles from the nearest Florida shoreline.	3/31/2005
El Paso Production Oil & Gas Company, Structure Removal SEA ES/SR 05–049, 05–050.	High Island, Blocks A310 & A316, Leases OCS–G 03375 & 21358, located 100 miles from the nearest Texas shoreline.	3/31/2005
Chevron U.S.A., Inc., Structure Removal SEA ES/SR 05–036 ...	West Cameron, Block 42, Lease OCS–G 22500, located 5 miles from the nearest Louisiana shoreline.	3/31/2005

Persons interested in reviewing environmental documents for the proposals listed above or obtaining information about SEAs and FONSIs prepared for activities on the Gulf of Mexico OCS are encouraged to contact MMS at the address or telephone listed in the **FOR FURTHER INFORMATION CONTACT** section.

Dated: April 18, 2005.

Chris C. Oynes,

Regional Director, Gulf of Mexico OCS Region.

[FR Doc. 05–10016 Filed 5–18–05; 8:45 am]

BILLING CODE 4310–MR–P

DEPARTMENT OF JUSTICE

Environmental and Natural Resources Division; Notice of Lodging Proposed Consent Decree

In accordance with Departmental Policy, 28 CFR 50.7, notice is hereby given that a proposed Decree in *United States* v. *Abeldgaard*, Civ. No. A–01–378 Civil (RRB) (D. Alaska), was lodged with the United States District Court for the District of Alaska on May 10, 2005.

This proposed Consent Decree concerns a complaint filed by the United States against Cloyd Moser and Modeb Investments, pursuant to Sections 309(b) and (d) of the Clean Water Act (''CWA''), 33 U.S.C. 1319(b) and (d), to obtain injunctive relief from and civil penalties against the Defendants for violating the Clean Water Act by discharging pollutants without a permit into waters of the United States. The proposed Consent Decree resolves these allegations by requiring the Defendants to restore the impacted areas and to pay a civil penalty. The Consent Decree also provides for the Defendants to perform a supplemental environmental project.

The Department of Justice will accept written comments relating to this proposed Consent Decree for thirty (30) days from the date of publication of this Notice. Please address comments to Mark A. Nitczynski, Environmental Defense Section, 999 18th Street, Suite 945, North Tower, Denver, Colorado 80207, and refer to *United States* v. *Abeldgaard,* DJ Reference No. 90–5–1–1–16195.

The proposed Consent Decree may be examined at the Clerk's Office, United States District Court for the District of Alaska, 222 West 7th Ave. #4, Anchorage, Alaska 99513. In addition, the proposed Consent Decree may be viewed at *http://www.usdoj.gov/enrd/open.html.*

Christopher Vaden,

Deputy Section Chief, Environmental Defense Section, Environmental & Natural Resources Division.

[FR Doc. 05–9942 Filed 5–18–05; 8:45 am]

BILLING CODE 4410–15–M

DEPARTMENT OF JUSTICE

Notice of Lodging of Consent Decrees Under the Lead-Based Paint Hazard Act

Notice is hereby given that on April 1, 2005, a proposed consent decree in *United States* v. *Gorman Park Properties, L.L.L.P. et al.,* Civil Action No. 05–cv–00648–DSD–SRN, and on March 30, 2005 a proposed consent decree in *United States* v. *Bashir Moghul.,* Civil Action No. 05–cv–00649–JNE–JGL, were lodged with the United States District Court for the District of Minnesota.

In *United States* v. *Grendahl,* the United States, on behalf of the Environmental Protection Agency (''EPA'') and the Department of Housing and Urban Development (''HUD''), alleges that Grendahl Park II LLC, Grendahl Park III LLC, and Gorman Park Properties (''Grendahl''), three family-owned real estate businesses, violated the Act by failing to make various disclosures required by Section 1018 of the Act, 42 U.S.C. 4852d, and its implementing regulations. The *Grendahl* defendants own and manage 12 residential properties in Minneapolis with a total of 208 units. In the proposed consent decree, the defendants agree to abate all lead-based paint hazards in each of their units. Grendahl also agrees to pay to the United States an administrative penalty of $7,500 and to perform a $50,000 Child Health Improvement Project (''CHIP'') to provide a mobile lead-screening van for use in the Minneapolis area.

In *United States* v. *Moghul,* the United States alleges that Bashir Moghul (''Moghul''), who owns and manages 28 houses and duplexes in Minnesota, Wisconsin, and Indiana, similarly violated the Act by failing to make the disclosures required by the Act and the regulations. In the proposed consent decree with Moghul, the defendant agrees to abate the lead-based paint hazards and replace all the windows in each of his houses in Minnesota, Wisconsin, and Indiana and pay an administrative penalty of $5,000 to the United States.

The Department of Justice will receive for a period of thirty (30) days from the date of this publication comments relating to the consent decrees. Comments should be addressed to the Assistant Attorney General of the Environment and Natural Resources Division, Department of Justice, P.O. Box 7611, Washington, DC 20044–7611, and should refer to *United States* v. *Gorman Park Properties, L.L.L.P. et al.,* D.J. #90–5–1–1–08518, or *United States* v. *Bashir Moghul,* D.J. #90–5–1–1–08520.

The proposed consent decrees may be examined at the Department of Housing and Urban Development, Office of General Counsel, 451 7th St. NW., Room 9262, Washington, DC 20410 (Attn.; at the office of the United States Attorney for the District of Minnesota, 600 U.S. Courthouse, 300 South Fourth Street, Minneapolis Minnesota, 55415 (Attn. Assistant United States Attorney Gregory G. Brooker); and at U.S. EPA Region 5, 77 W. Jackson Blvd., Chicago, IL 60604 (Attn. Assistant Regional Counsel Mary McAuliffe). During the public comment period, the consent decrees may also be examined on the following Department of Justice Web site, *http://www.usdoj.gov/enrd/open.html.* Copies of the consent decrees may also be obtained by mail from the Consent Decree Library, P.O. Box 7611, U.S. Department of Justice, Washington, DC 20044–7611 or by faxing or e-mailing a request to Tonia Fleetwood (*tonia.fleetwood@usdoj.gov*), fax no. (202) 514–0097, phone confirmation number (202) 514–1547. In requesting a copy please refer to the referenced case and enclose a check in the amount of $10 (25 cents per page reproduction costs), payable to the U.S. Treasury for the consent decree in *United States* v. *Gorman Park Properties, L.L.L.P. et al.,* D.J. #90–5–1–1–08518 and $10.50 (25 cents per page reproduction costs), payable to the U.S. Treasury, for the consent decree in *United States* v. *Bashir Moghul,* D.J. #90–5–1–1–08520.

Karen Dworkin,

Assistant Chief, Environmental Enforcement Section, Environment and Natural Resources Division.

[FR Doc. 05–9944 Filed 5–18–05; 8:45 am]

BILLING CODE 4410–15–M

DEPARTMENT OF JUSTICE

Notice of Lodging of Consent Decree Under the Lead-Based Paint Hazard Act

Notice is hereby given that on May 2, 2005, a proposed consent decree in *United States* v. *Will J. Sherard and W.J. Sherard Company,* Civil Action No. 05–C–0486, was lodged with the United States District Court for the Eastern District of Wisconsin.

The consent decree settles claims against the owner and management company of residential rental properties principally in Milwaukee, Wisconsin, which were brought on behalf of the Department of Housing and Urban Development and the Environmental Protection Agency under the Residential Lead-Based Paint Hazard Reduction Act 42 U.S.C. 4851 *et seq.* (''Lead Hazard Reduction Act''). The United States alleged in the complaint that the defendants failed to provide information to tenants concerning lead-based paint hazards, and failed to disclose to tenants the presence of known lead-based paint or known lead-based paint hazards.

Under the consent decree, defendants have agreed to provide the required notice and disclosures, to perform inspections at the buildings for the presence of lead-based paint, and to perform lead-based paint abatement. In addition, the defendants will pay a penalty of $15,000 to the United States.

The Department of Justice will receive for a period of thirty (30) days from the date of this publication comments relating to the consent decree. Comments should be addressed to the Assistant Attorney General of the Environment and Natural Resources Division, Department of Justice, P.O. Box 7611, Washington, DC 20044–7611, and should refer to *United States* v. *Will J. Sherard and W.J. Sherard Company,* D.J. # 90–11–2–08256.

The proposed consent decree may be examined at the Department of Housing and Urban Development, Office of General Counsel, 451 7th St., NW., Room 9262,Washington, DC 20410; at the office of the United States Attorney for the Eastern District of Wisconsin, 517 E. Wisconsin Ave., Room 530, Milwaukee, Wisconsin 53202; and at U.S. EPA Region 5, 77 W. Jackson Blvd., Chicago, IL 60604. During the public comment period, the consent decree may also be examined on the following Department of Justice Web site, *http://www.usdoj.gov/enrd/open.html.* Copies of the consent decree may also be obtained by mail from the Consent Decree Library, P.O. Box 7611, U.S. Department of Justice, Washington, DC 20044–7611 or by faxing or e-mailing a request to Tonia Fleetwood (*tonia.fleetwood@usdoj.gov*), fax no. (202) 514–0097, phone confirmation number (202) 514–1547. In requesting a copy please refer to the referenced case and enclose a check in the amount of $8.00 (25 cents per page reproduction costs), payable to the U.S. Treasury for the consent decree in *United Sates* v. *Will J. Sherard and W.J. Sherard Company.,* D.J. # 90–11–2–08256.

Karen Dworkin,

Assistant Chief, Environmental Enforcement Section, Environment and Natural Resources Division.

[FR Doc. 05–9943 Filed 5–18–05; 8:45 am]

BILLING CODE 4410–15–M

DEPARTMENT OF JUSTICE

Bureau of Alcohol, Tobacco, Firearms and Explosives

Agency Information Collection Activities: Proposed Collection; Comments Requested

ACTION: 60–Day Notice of Information Collection Under Review: Firearms Disabilities for Nonimmigrant Aliens.

The Department of Justice (DOJ), Bureau of Alcohol, Tobacco, Firearms and Explosives (ATF), has submitted the following information collection request to the Office of Management and Budget (OMB) for review and approval in accordance with the Paperwork Reduction Act of 1995. The proposed information collection is published to obtain comments from the public and affected agencies. Comments are encouraged and will be accepted for ''sixty days'' until July 18, 2005. This process is conducted in accordance with 5 CFR 1320.10.

If you have comments especially on the estimated public burden or associated response time, suggestions, or need a copy of the proposed information collection instrument with instructions or additional information, please contact Barbara Terrell, Firearms Enforcement Branch, Room 7400, 650 Massachusetts Avenue, NW, Washington, DC 20226.

Written comments and suggestions from the public and affected agencies concerning the proposed collection of information are encouraged. Your comments should address one or more of the following four points:

—Evaluate whether the proposed collection of information is necessary for the proper performance of the functions of the agency, including whether the information will have practical utility;

—Evaluate the accuracy of the agencies estimate of the burden of the proposed collection of information, including the validity of the methodology and assumptions used;

—Enhance the quality, utility, and clarity of the information to be collected; and

—Minimize the burden of the collection of information on those who are to respond, including through the use of appropriate automated, electronic, mechanical, or other technological collection techniques or other forms of information technology, *e.g.*, permitting electronic submission of responses.

Overview of this information collection:

(1) *Type of Information Collection:* Extension of a currently approved collection.

(2) *Title of the Form/Collection:* Firearms Disabilities for Nonimmigrant Aliens.

(3) *Agency form number, if any, and the applicable component of the Department of Justice sponsoring the collection:* Form Number: None. Bureau of Alcohol, Tobacco, Firearms and Explosives.

(4) *Affected public who will be asked or required to respond, as well as a brief abstract:* Primary: Business or other for-profit. Other: None. The nonimmigrant alien information will be used to determine if a nonimmigrant alien is eligible to purchase, obtain, possess, or import a firearm. Nonimmigrant aliens also must maintain the documents while in possession of firearms or ammunition in the United States for verification purposes.

(5) *An estimate of the total number of respondents and the amount of time estimated for an average respondent to respond:* It is estimated that 12,100 respondents will take an estimated 6 minutes to report the information.

(6) *An estimate of the total public burden (in hours) associated with the collection:* There are an estimated 1,210 annual total burden hours associated with this collection.

If additional information is required contact: Brenda E. Dyer, Department Clearance Officer, Policy and Planning Staff, Justice Management Division, Department of Justice, Patrick Henry Building, Suite 1600, 601 D Street NW, Washington, DC 20530.

Dated: May 13, 2005.

Brenda E. Dyer,

Department Clearance Officer, Department of Justice.

[FR Doc. 05–9967 Filed 5–18–05; 8:45 am]

BILLING CODE 4410–FY–P

DEPARTMENT OF JUSTICE

Office of Justice Programs

Agency Information Collection Activities: Proposed Collection; Comments Requested

ACTION: 60-Day Notice of Information Collection Under Review: Bureau of Justice Assistance: National Opinion Poll on White Collar Crime.

The Department of Justice (DOJ), Office of Justice Programs (OJP), has submitted the following information collection request to the Office of Management and Budget (OMB) for review and approval in accordance with

the Paperwork Reduction Act of 1995. The proposed information collection is published to obtain comments from the public and affected agencies. Comments are encouraged and will be accepted for ''sixty days'' until July 18, 2005. This process is conducted in accordance with 5 CFR 1320.10.

If you have comments especially on the estimated public burden or associated response time, suggestions, or need a copy of the proposed information collection instrument with instructions or additional information, please contact Maria A. Pressley at 202–353–8643, Bureau of Justice Assistance, Office of Justice Programs, U.S. Department of Justice, 810 Seventh Street, NW., Washington, DC 20531.

Written comments and suggestions from the public and affected agencies concerning the proposed collection of information are encouraged. Your comments should address one or more of the following four points:

—Evaluate whether the proposed collection of information is necessary for the proper performance of the functions of the agency, including whether the information will have practical utility;
—Evaluate the accuracy of the agencies estimate of the burden of the proposed collection of information, including the validity of the methodology and assumptions used;
—Enhance the quality, utility, and clarity of the information to be collected; and
—Minimize the burden of the collection of information on those who are to respond, including through the use of appropriate automated, electronic, mechanical, or other technological collection techniques or other forms of information technology, *e.g.*, permitting electronic submission of responses.

Overview of this information collection:

(1) *Type of Information Collection:* Reinstatement, with change, of a previously approved collection.

(2) *Title of the Form/Collection:* Bureau of Justice Assistance: National Opinion Poll on White Collar Crime.

(3) *Agency form number, if any, and the applicable component of the Department of Justice sponsoring the collection:* Form Number: None. Office of Justice Programs, Bureau of Justice Statistics.

(4) *Affected public who will be asked or required to respond, as well as a brief abstract:* Primary: Individuals or households. BJA in a cooperative agreement (Grant Number: 2004–WCCX–1199) will conduct a national survey of public opinion on the public's ever changing experiences with, and perceptions of white-collar crime.

(5) *An estimate of the total number of respondents and the amount of time estimated for an average respondent to respond/reply:* It is estimated that it will take the 1500 applicants surveyed approximately 18 minutes to respond to the questions.

(6) *An estimate of the total public burden (in hours) associated with the collection:* The total estimated annual hour burden to complete the certification form is 450 hours.

If additional information is required contact: Brenda E. Dyer, Clearance Officer, United States Department of Justice, Justice Management Division, Policy and Planning Staff, Patrick Henry Building, Suite 1600, 601 D Street, NW., Washington, DC 20530.

Dated: May 13, 2005.

Brenda E. Dyer,

Clearance Officer, U.S. Department of Justice.

[FR Doc. 05–9968 Filed 5–18–05; 8:45 am]

BILLING CODE 4410–18–P

DEPARTMENT OF JUSTICE

Office of Justice Programs

Agency Information Collection Activities: Proposed Collection; Comments Requested

ACTION: 60-day notice of information collection under review: Arrestee Drug Abuse Monitoring (ADAM) program questionnaire.

The Department of Justice (DOJ), Office of Justice Programs (OJP), National Institute of Justice (NIJ), has submitted the following information collection request to the Office of Management and Budget (OMB) for review and clearance in accordance with the Paperwork Reduction Act of 1995. The proposed information collection is published to obtain comments from the public and affected agencies. Comments are encouraged and will be accepted for ''sixty days'' until July 18, 2005. This process is conducted in accordance with 5 CFR 1320.10.

If you have comments especially on the estimated public burden or associated response time, suggestions, or need a copy of the proposed information collection instrument with instructions or additional information, please contact Christine Crossland, Senior Social Science Analyst, National Institute of Justice, 810 Seventh Street, NW., Room 7111, Washington, DC 20531 or by e-mail at *Christine.Crossland@usdoj.gov.*

Written comments and suggestions from the public and affected agencies concerning the proposed collection of information are encouraged. Your comments should address one or more of the following four points:

—Evaluate whether the proposed collection of information is necessary for the proper performance of the functions of the agency, including whether the information will have any practical utility;
—Evaluate the accuracy of the agency's estimate of the burden of the proposed collection of information, including the validity of the methodology and assumptions used;
—Enhance the quality, utility, and clarity of the information to be collected; and
—Minimize the burden of collection of information on those who are to respond, including through the use of appropriate automated, electronic, mechanical, or other technological collection techniques or other forms of information technology, *e.g.*, permitting electronic submission of responses.

Overview of this information collection:

(1) *Type of Information Collection:* Extension of a currently approved collection.

(2) *Title of the Form/Collection:* Arrestee Drug Abuse Monitoring (ADAM) Program Questionnaire.

(3) *Agency form number, if any and the applicable components of the Department of Justice sponsoring the collection:* The form number is AD–1. The sponsoring component of the Department of Justice is the Office of Research and Evaluation, National Institute of Justice.

(4) *Affected public who will be asked or required to respond, as well as a brief abstract:* Misdemeanor and felony arrestees in city and county jails. The program monitors the extent and types of drug use among arrestees. Data are collected at each research site three times a year based on a county-based representative sample of arrestees. Participation is voluntary and confidential and data collected include a personal interview and urine specimen.

(5) *An estimate of the total number of respondents and amount of time estimated for an average respondent to respond/reply:* It is estimated that 60,000 respondents will complete each form within approximately 23 minutes.

(6) *An estimate of the total public burden (in hours) associated with the collection:* There are an estimated 23,000 total annual burden hours associated with this collection.

FOR FURTHER INFORMATION CONTACT: Brenda E. Dyer, Department Clearance Officer, United States Department of Justice, Justice Management Division, Policy and Planning Staff, Patrick Henry Building, Suite 1600, 601 D Street, NW., Washington, DC 20530.

Dated: May 12, 2005.

Brenda E. Dyer,

Department Clearance Officer, Department of Justice.

[FR Doc. 05–9969 Filed 5–18–05; 8:45 am]

BILLING CODE 4410–18–P

DEPARTMENT OF LABOR

Employment And Training Administration

[TA–W–56,849]

Acco Chain and Lifting Products, a Division of FKI Industries, Inc., York, PA; Notice of Termination of Investigation

Pursuant to Section 221 of the Trade Act of 1974, as amended, an investigation was initiated on March 30, 2005 in response to a petition filed by a company official on behalf of workers at Acco Chain and Lifting Products, a division of FKI Industries, Inc., York, Pennsylvania.

The petitioner has requested that the petition be withdrawn. Consequently, the investigation has been terminated.

Signed at Washington, DC, this 4th day of May 2005.

Richard Church,

Certifying Officer, Division of Trade Adjustment Assistance.

[FR Doc. E5–2515 Filed 5–18–05; 8:45 am]

BILLING CODE 4510–30–P

DEPARTMENT OF LABOR

Employment and Training Administration

[TA–W–57,083]

AVX Corporation; El Paso, TX; Notice of Termination of Investigation

Pursuant to Section 221 of the Trade Act of 1974, an investigation was initiated on May 2, 2005 in response to petition filed by a company official on behalf of workers at AVX Corporation, El Paso, Texas.

The petitioner has requested that the petition be withdrawn. Consequently, and the investigation has been terminated.

Signed in Washington, DC, this 5th day of May, 2005.

Richard Church,

Certifying Officer, Division of Trade Adjustment Assistance.

[FR Doc. E5–2520 Filed 5–18–05; 8:45 am]

BILLING CODE 4510–30–P

DEPARTMENT OF LABOR

Employment and Training Administration

[TA–W–55,352]

BIC Corporation, BIC Consumer Products Manufacturing Co., Inc., BIC USA, Inc., Milford, CT; Amended Certification Regarding Eligibility To Apply for Worker Adjustment Assistance and Alternative Trade Adjustment Assistance

In accordance with Section 223 of the Trade Act of 1974 (19 U.S.C. 2273) the Department of Labor issued a Certification of Eligibility to Apply for Worker Adjustment Assistance and Alternative Trade Adjustment Assistance on September 9, 2004, applicable to workers of BIC Corporation, BIC Consumer Products Manufacturing Co., Inc., Milford, Connecticut. The notice was published in the **Federal Register** on October 8, 2004 (69 FR 60427).

At the request of the State agency, the Department reviewed the certification for workers of the subject firm. The workers are engaged in the production of stic pens and single blade shavers and are not separately identifiable by product line.

New information shows that that some workers separated from employment at the subject firm had their wages reported under a separate unemployment insurance (UI) tax account for BIC USA, Inc.

Accordingly, the Department is amending the certification to properly reflect this matter.

The intent of the Department's certification is to include all workers of BIC Corporation, BIC Consumer Products Manufacturing Co., Inc., BIC USA, Inc., Milford, Connecticut who was adversely affected by a shift in production to Mexico, South America and Europe.

The amended notice applicable to TA–W–55,352 is hereby issued as follows:

''All workers of BIC Corporation, BIC Consumer Products Manufacturing Co., Inc., BIC USA, Inc., Milford, Connecticut, who became totally or partially separated from employment on or after August 2, 2003, through September 9, 2006, are eligible to apply for adjustment assistance under Section 223 of the Trade Act of 1974, and are also eligible to apply for alternative trade adjustment assistance under Section 246 of the Trade Act of 1974.''

Signed at Washington, DC this 27th day of April 2005.

Linda G. Poole,

Certifying Officer, Division of Trade Adjustment Assistance.

[FR Doc. E5–2512 Filed 5–18–05; 8:45 am]

BILLING CODE 4510–30–P

DEPARTMENT OF LABOR

Employment and Training Administration

Investigations Regarding Certifications of Eligibility To Apply for Worker Adjustment Assistance

Petitions have been filed with the Secretary of Labor under Section 221(a) of the Trade Act of 1974 (''the Act'') and are identified in the Appendix to this notice. Upon receipt of these petitions, the Director of the Division of Trade Adjustment Assistance, Employment and Training Administration, has instituted investigations pursuant to Section 221(a) of the Act.

The purpose of each of the investigations is to determine whether the workers are eligible to apply for adjustment assistance under Title II, Chapter 2, of the Act. The investigations will further relate, as appropriate, to the determination of the date on which total or partial separations began or threatened to begin and the subdivision of the firm involved.

The petitioners or any other persons showing a substantial interest in the subject matter of the investigations may request a public hearing, provided such request is filed in writing with the Director, Division of Trade Adjustment Assistance, at the address shown below, not later than May 31, 2005.

Interested persons are invited to submit written comments regarding the subject matter of the investigations to the Director, Division of Trade Adjustment Assistance, at the address shown below, not later than May 31, 2005.

The petitions filed in this case are available for inspection at the Office of the Director, Division of Trade Adjustment Assistance, Employment and Training Administration, U.S. Department of Labor, Room C–5311, 200 Constitution Avenue, NW., Washington, DC 20210.

Signed at Washington, DC this 13th day of May 2005.

Timothy Sullivan,

Director, Division of Trade Adjustment Assistance.

APPENDIX

[Petitions instituted between 04/25/2005 and 04/29/2005]

TA–W	Subject firm (petitioners)	Location	Date of institution	Date of petition
57,033	Brandon Hosiery (State)	Fort Payne, AL	04/25/2005	04/21/2005
57,034	Grover Industries, Inc. (Comp)	Grover, NC	04/25/2005	04/25/0205
57,035	Deroyal (Stat Medical) (Wkrs)	New Tazewell, TN	04/25/2005	04/15/2005
57,036	CRI Advantage (State)	Corvallis, OR	04/25/2005	04/19/2005
57,037	Ametek (Comp)	Bartow, FL	04/25/2005	04/22/2005
57,038	Sunrock, LLC (State)	Dover, DE	04/25/2005	04/22/2005
57,039	Davlyn Manufacturing Co., Inc. (Wkrs)	Spring City, PA	04/25/2005	04/22/2005
57,040	Higgins Seaming (State)	Rainsville, AL	04/25/2005	04/20/2005
57,041	Louisiana-Pacific Corporation (Comp)	Hayden Lake, ID	04/25/2005	04/19/2005
57,042	KMedic (Comp)	Northvale, NJ	04/25/2005	04/20/2005
57,043	Haz-Waste (Wkrs)	Mayfield, KY	04/25/2005	04/13/2005
57,044	Hewlett-Packard (State)	Covallis, OR	04/25/2005	04/19/2005
57,045	Locklear Hosiery, Inc. (Comp)	Fort Payne, AL	04/25/2005	04/06/2005
57,046	Bernhardt Furniture, Inc. (Wkrs)	Lenoir, NC	04/25/2005	04/17/2005
57,047	Woodbridge (Comp)	Brodhead, WI	04/25/2005	04/21/2005
57,048	Osram Sylvania (Comp)	Lake Zurich, IL	04/25/2005	04/14/2005
57,049	Acuity Lighting Group, Inc. (State)	Conyers, GA	04/25/2005	04/21/2005
57,050	Emcore Corp. (Wkrs)	Alhambra, CA	04/25/2005	04/14/2005
57,051	Trend Technologies, Inc. (State)	Hayward, CA	04/25/2005	04/13/2005
57,052	Sitel/Nafs (NPC)	Norcross, GA	04/25/2005	04/11/2005
57,053	Armstrong Wood Products (IBC)	Nashville, TN	04/26/2005	04/25/2005
57,054	Transpro, Inc. (Comp)	Buffalo, NY	04/26/2005	04/26/2005
57,055	Integrated Device Technology, Inc. (Wkrs)	Santa Clara, CA	04/26/2005	04/19/2005
57,056	Precise Polestar (Wkrs)	State College, PA	04/27/2005	04/26/2005
57,057	Com-Fo Hosiery Mills (Comp)	Henderson, NC	04/27/2005	04/20/2005
57,058	Riddle and Company, LLC (Wkrs)	Burlington, NC	04/27/2005	04/22/2005
57,059	Dell Financial Services (Wkrs)	Austin, TX	04/27/2005	04/26/2005
57,060	Wolf Range Company, LLC (State)	Compton, CA	04/27/2005	04/26/2005
57,061	Copland Fabrics (Comp)	Burlington, NC	04/27/2005	04/19/2005
57,062	Fisher Scientific Co. (Comp)	Indiana, PA	04/27/2005	04/26/2005
57,063	Bristol-Meyers Squibb (Wkrs)	Princeton, NJ	04/28/2005	04/27/2005
57,064	Qualipac America (State)	Wayne, NJ	04/28/2005	04/27/2005
57,065	Galileo International (State)	Centennial, CO	04/28/2005	04/27/2005
57,066	Second Chance Body Armor, Inc. (Comp)	Central Lake, MI	04/28/2005	04/27/2005
57,067	Unit Parts Co. (Comp)	Oklahoma City, OK	04/28/2005	04/18/2005
57,068	Johnson and Johnson CPC (Comp)	Royston, GA	04/28/2005	04/15/2005
57,069	Eaton—Hydraulics (Comp)	Vinita, OK	04/28/2005	04/14/2005
57,070	Royal Home Fashions (Wkrs)	Oxford, NC	04/29/2005	04/28/2005
57,071	Makita Corp. of America (Comp)	Buford, GA	04/29/2005	04/28/2005
57,072	Suez Energy Generation (Wkrs)	Hodges, SC	04/29/2005	04/25/2005
57,073	Kopin Optical (State)	Taunton, MA	04/29/2005	04/27/2005
57,074	Robinson-Ransbottom Pottery Co. (Comp)	Roseville, OH	04/29/2005	04/22/2005
57,075	Accuride International, Inc. (Comp)	Santa Fe Spring, CA	04/29/2005	04/26/2005
57,076	Plasco (UNITE)	Gurnee, IL	04/29/2005	04/29/2005
57,077	Radicispandex Corp. (Comp)	Fall River, MA	04/29/2005	04/28/2005
57,078	Allied Bias Products (State)	Jersey City, NJ	04/29/2005	04/27/2005
57,079	Lyons Diecasting (Wkrs)	Buckner, MO	04/29/2005	04/20/2005
57,080	Leviton Mfg. Co., Inc. (Comp)	Warwick, RI	04/29/2005	04/28/2005

[FR Doc. E5–2519 Filed 5–18–05; 8:45 am]

BILLING CODE 4510–30–P

DEPARTMENT OF LABOR

Employment and Training Administration

[TA–W–57,018]

Cedar Creek Corporation; High Point, NC; Notice of Termination of Investigation

Pursuant to Section 221 of the Trade Act of 1974, an investigation was initiated on April 20, 2005 in response to a petition filed by a company official on behalf of workers at Cedar Creek Corporation, High Point, North Carolina (TA–W–57,018).

The petitioner has requested that the petition be withdrawn. Consequently, further investigation in this case would serve no purpose, and the investigation has been terminated.

Signed in Washington, DC, this 6th day of May, 2005.

Linda G. Poole,

Certifying Officer, Division of Trade Adjustment Assistance.

[FR Doc. E5–2518 Filed 5–18–05; 8:45 am]

BILLING CODE 4510–30–P

DEPARTMENT OF LABOR

Employment and Training Administration

[TA–W–56,561]

Citicorp Credit Services, Inc. (USA), Middleburg Heights, OH; Dismissal of Application for Reconsideration

Pursuant to 29 CFR 90.18(C) an application for administrative reconsideration was filed with the Director of the Division of Trade Adjustment Assistance for workers at Citicorp Credit Services, Inc. (USA), Middleburg, Heights, Ohio. The application contained no new substantial information which would bear importantly on the Department's determination. Therefore, dismissal of the application was issued.

TA–W–56,561; Citicorp Credit Services, Inc. (USA) Middleburg Heights, Ohio (May 9, 2005)

Signed at Washington, DC, this 13th day of May 2005.

Timothy Sullivan,

Director, Division of Trade Adjustment Assistance.

[FR Doc. E5–2514 Filed 5–18–05; 8:45 am]

BILLING CODE 4510–30–P

DEPARTMENT OF LABOR

Employment and Training Administration

[TA–W–57,101]

Gaylord Inland, Dallas, TX; Notice of Termination of Investigation

Pursuant to Section 221 of the Trade Act of 1974, as amended, an investigation was initiated on May 4, 2005 in response to a worker petition filed by a State agency representative on behalf of workers at Gaylord Inland, Dallas, Texas.

All workers were separated from the subject firm more than one year before the date of the petition. Section 223(b) of the Act specifies that no certification may apply to any worker whose last separation occurred more than one year before the date of the petition. Consequently, further investigation in this case would serve no purpose, and the investigation has been terminated.

Signed at Washington, DC this 6th day of May 2005.

Richard Church,

Certifying Officer, Division of Trade Adjustment Assistance.

[FR Doc. E5–2522 Filed 5–18–05; 8:45 am]

BILLING CODE 4510–30–P

DEPARTMENT OF LABOR

Employment and Training Administration

[TA–W–56,401]

Neat Feet Hosiery, Inc., Stoneville, NC; Dismissal of Application for Reconsideration

Pursuant to 29 CFR 90.18(C) an application for administrative reconsideration was filed with the Director of the Division of Trade Adjustment Assistance for workers at Neat Feet Hosiery, Inc., Stoneville, North Carolina. The application contained no new substantial information which would bear importantly on the Department's determination. Therefore, dismissal of the application was issued.

TA–W–56,401; Neat Feet Hosiery, Inc. Stoneville, North Carolina (May 9, 2005)

Signed at Washington, DC, this 13th day of May 2005.

Timothy Sullivan,

Director, Division of Trade Adjustment Assistance.

[FR Doc. E5–2513 Filed 5–18–05; 8:45 am]

BILLING CODE 4510–30–P

DEPARTMENT OF LABOR

Employment and Training Administration

[TA–W–56,981]

Source Electronics Corporation; Hollis, NH; Notice of Termination of Investigation

Pursuant to Section 221 of the Trade Act of 1974, as amended, an investigation was initiated on April 15, 2005 in response to a petition filed by a company official on behalf of workers of Source Electronics Corporation, Hollis, New Hampshire.

The petitioner has requested that the petition be withdrawn. Consequently, further investigation would serve no purpose and the investigation has been terminated.

Signed at Washington, DC, this 3rd day of May, 2005.

Linda G. Poole,

Certifying Officer, Division of Trade Adjustment Assistance.

[FR Doc. E5–2517 Filed 5–18–05; 8:45 am]

BILLING CODE 4510–30–P

DEPARTMENT OF LABOR

Employment and Training Administration

[TA–W–56,908B]

Stoneridge Control Devices; Switch Products Division, Heat/Cool Switch Production; Canton, MA; Notice of Termination of Investigation

Pursuant to Section 221 of the Trade Act of 1974, as amended, an investigation was initiated on April 7, 2005 in response to a petition filed by a company official on behalf of workers at Stoneridge Control Devices, Switch Products Division, Heat/Cool Switch Production, Canton, Massachusetts.

The petitioner has requested that the petition be withdrawn. Consequently, the investigation has been terminated.

Signed at Washington, DC this 9th day of May, 2005.

Linda G. Poole,

Certifying Officer, Division of Trade Adjustment Assistance.

[FR Doc. E5–2516 Filed 5–18–05; 8:45 am]

BILLING CODE 4510–30–P

FEDERAL MINE SAFETY AND HEALTH REVIEW COMMISSION

Sunshine Act Meeting

May 10, 2005.

TIME AND DATE: 10 a.m., Thursday, May 19, 2005.

PLACE: The Richard V. Backley Hearing Room, 9th Floor, 601 New Jersey Avenue, NW., Washington, DC.

STATUS: Open.

MATTERS TO BE CONSIDERED: The Commission will consider and act upon the following in open session: *Secretary of Labor and United Mine Workers of America* v. *Maple Creek Mining, Inc., et al.,* Docket Nos. PENN 2002–116, PENN 2003–54, PENN 2003–55, and PENN 2003–56. (Issues include whether substantial evidence supports the judge's determinations that: (1) The operator violated the requirement of 30 CFR 75.380(d)(1) to maintain in a safe condition each designated escapeway in an underground coal mine; (2) the violation was significant and substantial; (3) the violation was due to the operator's unwarrantable failure to comply with the standard; and (4) Maple Creek employees Steve Brown, Alvy Walker, and Greg Miller were liable for the violation under section 110(c) of the Federal Mine Safety and Health Act of 1977.)

The Commission heard oral argument in this matter on May 4, 2005.

Any person attending this meeting who requires special accessibility features and/or auxiliary aids, such as sign language interpreters, must inform the Commission in advance of those needs, subject to 29 CFR 2706.150(a)(3) and 2706.160(d).

CONTACT PERSON FOR MORE INFORMATION: Jean Ellen (202) 434–9950 / (202) 708–9300 for TDD Relay/1–800–877–8339 for toll free.

Jean H. Ellen,

Chief Docket Clerk.

[FR Doc. 05–10053 Filed 5–16–05; 4:07 pm]

BILLING CODE 6735–01–M

NATIONAL FOUNDATION ON THE ARTS AND THE HUMANITIES

National Endowment for the Arts; Arts Advisory Panel

Pursuant to Section 10(a)(2) of the Federal Advisory Committee Act (Pub. L. 92–463), as amended, notice is hereby given that a meeting of the Arts Advisory Panel to the National Council on the Arts will be held by teleconference from the Nancy Hanks Center, 1100 Pennsylvania Avenue, NW., Washington, DC 20506 as follows:

Design (Your Town: Citizens Institute for Rural Design): June 14, 2005. This meeting, from 2 p.m. to 4 p.m. (E.D.T.), will be closed.

This meeting is for the purpose of Panel review, discussion, evaluation, and recommendations on financial assistance under the National Foundation on the Arts and the Humanities Act of 1965, as amended, including information given in confidence to the agency. In accordance with the determination of the Chairman of April 8, 2005, these sessions will be closed to the public pursuant to subsection (c)(6) of section 552b of Title 5, United States Code.

Further information with reference to this meeting can be obtained from Ms. Kathy Plowitz-Worden, Office of Guidelines & Panel Operations, National Endowment for the Arts, Washington, DC 20506, or call 202/682–5691.

Dated: May 12, 2005.

Kathy Plowitz-Worden,

Panel Coordinator, Panel Operations, National Endowment for the Arts.

[FR Doc. 05–9991 Filed 5–18–05; 8:45 am]

BILLING CODE 7537–01–P

NATIONAL FOUNDATION ON THE ARTS AND THE HUMANITIES

National Endowment for the Arts; Federal Advisory Committee on International Exhibitions

Pursuant to Section 10(a)(2) of the Federal Advisory Committee Act (Pub. L. 92–463), as amended, notice is hereby given that a teleconference meeting of the Federal Advisory Committee on International Exhibitions will be held from the Nancy Hanks Center, 1100 Pennsylvania Avenue, NW., Washington, DC. 20506 on June 1, 2005 (E.D.T.) This meeting, from 12 p.m. to 12:30 p.m., will be closed.

This meeting is for the purpose of Panel review, discussion, evaluation, and recommendations on financial assistance under the National Foundation on the Arts and the Humanities Act of 1965, as amended, including information given in confidence to the agency. In accordance with the determination of the Chairman of April 8, 2005, these sessions will be closed to the public pursuant to subsection (c)(6) of section 552b of Title 5, United States Code.

Further information with reference to this meeting can be obtained from Ms. Kathy Plowitz-Worden, Office of Guidelines & Panel Operations, National Endowment for the Arts, Washington, DC 20506, or call 202/682–5691.

Dated: May 11, 2005.

Kathy Plowitz-Worden,

Panel Coordinator, Panel Operations, National Endowment for the Arts.

[FR Doc. 05–9990 Filed 5–18–05; 8:45 am]

BILLING CODE 7537–01–P

NATIONAL PRISON RAPE ELIMINATION COMMISSION

Notice of Meeting

AGENCY: National Prison Rape Elimination Commission.

ACTION: Notice of meeting.

SUMMARY: Pursuant to the Prison Rape Elimination Act of 2003 (Pub. L. 108-79) [42 U.S.C Section 15601, *et seq.*], the National Prison Rape Elimination Commission intends to hold a public meeting. The meeting shall address several issue related to the impact prison sexual assaults have on the individual, the family, and the community. There will be survivor testimony related to having been sexually assaulted while incarcerated. There will also be testimony of a survivor's relative about the impact of prison rape on the survivor's family. Finally, expert witnesses will discuss the social, moral, mental, and medical consequences of prison sexual assault.

DATE AND TIME: The meeting will take place on Tuesday, June 14, 2005, starting at 9 a.m.

ADDRESSES: The meeting will take place at 210 Cannon House Office Building, Budget Committee Hearing Room, Washington, DC, 20515.

AGENCY CONTACT: Lisa Price-Grear, National Prison Rape Elimination Commission, 810 7th Street, NW., Washington, DC 20531; by telephone at: (202) 616–3561.

Dated: May 11, 2005.

L. Jackson Thomas II,

Acting Executive Director, National Prison Rape Elimination Commission.

[FR Doc. 05–9748 Filed 5–18–05; 8:45 am]

BILLING CODE 4410–18–P

NATIONAL SCIENCE FOUNDATION

Advisory Committee for GPRA Performance Assessment (13853); Notice of Meeting

In accordance with the Federal Advisory Committee Act (Pub. L. 92–463, as amended) the National Science Foundation announces the following meeting.

Name: Advisory Committee for GPRA Performance Assessment (AC/GPA).

Date and Time: June 16, 2005, 8:30 a.m.–5:30 p.m.; June 17, 2005; 8:30 a.m.–5:00 p.m.

Place: National Science Foundation, 4201 Wilson Boulevard, Arlington, VA 22230, Room 375. If you are attending the meeting and need access to the NSF building, please contact Joan Miller (*jlmiller@nsf.gov)* for a visitor's badge.

Contact: Joan Miller, Administrative Manager, BFA, National Science Foundation, Room 405, Arlington, Virginia. Phone: 703–292–8200.

Type of Meeting: Open.

Purpose of Meeting: To provide advice and recommendations to the National Science Foundation (NSF) Director regarding the Foundation's performance as it relates to the Government Performance and Results Act of 1993 (GPRA).

Agenda: Topics include retrospective accomplishments of NSF awards as they relate to performance indicators associated with the National Science Foundation's People, Ideas, Tools, (P, I, T) and Organizational Excellence (OE) strategic outcome goals; the quality, relevance, and balance of NSF award portfolios; and issues involving innovative, high risk, and multidisciplinary research and education proposals.

Thursday, June 16, 2005

Welcome and Introductions; Charge to the Committee; Overview Presentations of NSF Performance Assessment, Merit Review, and Broadening Participation. The Committee will then divide into subgroups to review and discuss retrospective accomplishments under the People, Ideas, Tools, and OE goals.

Friday, June 17, 2005

The Committee reconvenes as a Committee of the Whole to hear progress reports from the P, I, T, and OE subgroups and then divides into those subgroups for further discussion. In the afternoon, the Committee of the Whole reconvenes to discuss its findings, recommendations, and preparation of the final report.

Dated: May 17, 2005.

Suzanne Bolton,

Committee Management Officer.

[FR Doc. 05–10137 Filed 5–17–05; 12:31 am]

BILLING CODE 7555–01–M

NUCLEAR REGULATORY COMMISSION

[Docket No. 030–02981]

Notice of Availability of Environmental Assessment and Finding of No Significant Impact for License Amendment for Allegheny General Hospital's Facility at 3290 William Pitt Way in Pittsburgh, PA

AGENCY: Nuclear Regulatory Commission.

ACTION: Notice of availability.

FOR FURTHER INFORMATION CONTACT: Sandra Gabriel, Medical Branch, Division of Nuclear Materials Safety, Region I, 475 Allendale Road, King of Prussia, Pennsylvania 19406, telephone (610) 337–5182, fax (610) 337–5269; or by email: *slg2@nrc.gov.*

SUPPLEMENTARY INFORMATION:

I. Introduction

The Nuclear Regulatory Commission (NRC) is issuing a license amendment to Allegheny General Hospital for Materials License No. 37–01317–01, to authorize release of its facility at 3290 William Pitt Way in Pittsburgh, Pennsylvania, for unrestricted use. NRC has prepared an Environmental Assessment (EA) in support of this action in accordance with the requirements of 10 CFR Part 51. Based on the EA, the NRC has concluded that a Finding of No Significant Impact (FONSI) is appropriate. The amendment will be issued following the publication of this Notice.

II. EA Summary

The purpose of the action is to authorize the release of the licensee's facility at 3290 William Pitt Way in Pittsburgh, Pennsylvania, for unrestricted use. Allegheny General Hospital was authorized by NRC from March 31,1994, to use radioactive materials for research and development purposes at the site. In 1998, Allegheny General Hospital ceased operations with licensed materials at the 3290 William Pitt Way site, and on April 7, 2004, requested that NRC release the facility for unrestricted use. Allegheny General Hospital has conducted surveys of the facility and provided information to the NRC to demonstrate that the site meets the license termination criteria in Subpart E of 10 CFR Part 20 for unrestricted use.

The NRC staff has prepared an EA in support of the license amendment. The facility was remediated and surveyed prior to the licensee requesting the license amendment. The NRC staff has reviewed the information and final status survey submitted by Allegheny General Hospital. Based on its review, the staff has determined that there are no additional remediation activities necessary to complete the proposed action. Therefore, the staff considered the impact of the residual radioactivity at the facility and concluded that since the residual radioactivity meets the requirements in Subpart E of 10 CFR Part 20, a Finding of No Significant Impact is appropriate.

III. Finding of No Significant Impact

The staff has prepared the EA (summarized above) in support of the license amendment to release the facility at 3290 William Pitt Way in Pittsburgh, Pennsylvania for unrestricted use. The NRC staff has evaluated Allegheny General Hospital's request and the results of the surveys and has concluded that the completed action complies with the criteria in Subpart E of 10 CFR Part 20. On the basis of the EA, the NRC has concluded that the environmental impacts from the action are expected to be insignificant and has determined not to prepare an environmental impact statement for the action.

IV. Further Information

Documents related to this action, including the application for the license amendment and supporting documentation, are available electronically at the NRC's Electronic Reading Room at *http://www.nrc.gov/reading-rm/adams.html.* From this site, you can access the NRC's Agencywide Document Access and Management System (ADAMS), which provides text and image files of NRC's public documents. The ADAMS accession numbers for the documents related to this Notice are: Environmental Assessment (ML050900146), letter dated April 7, 2004 with attached closeout survey results (ML042020449), letter dated September 29, 2004 (ML042750483), and electronic mail dated March 24, 2005 (ML050880370). Persons who do not have access to ADAMS or who encounter problems in accessing the documents located in ADAMS, should contact the NRC PDR Reference staff by telephone at (800) 397–4209 or (301) 415–4737, or by email to *pdr@nrc.gov.* These documents may also be examined, and/or copied for a fee, at the NRC PDR, located at One White Flint North, 11555 Rockville Pike (First Floor), Rockville, MD 20852. The PDR is open from 7:45 a.m. to 4:15 p.m., Monday through Friday, except on Federal Holidays; and at the Region I Office, 475 Allendale Road, King of Prussia, Pennsylvania 19406.

Dated at King of Prussia, Pennsylvania, this 10th day of May, 2005.

For the Nuclear Regulatory Commission.

Pamela J. Henderson,

Chief, Medical Branch, Division of Nuclear Materials Safety, Region I.

[FR Doc. E5–2508 Filed 5–18–05; 8:45 am]

BILLING CODE 7590–01–P

NUCLEAR REGULATORY COMMISSION

[Docket No. 030–02489]

Notice of Availability of Environmental Assessment and Finding of No Significant Impact for License Amendment for Princeton Healthcare System's Facility in Princeton, NJ

AGENCY: Nuclear Regulatory Commission.

ACTION: Notice of availability.

FOR FURTHER INFORMATION CONTACT: Sandra Gabriel, Medical Branch, Division of Nuclear Materials Safety, Region I, 475 Allendale Road, King of Prussia, Pennsylvania 19406, telephone (610) 337–5182, fax (610) 337–5269; or by e-mail: *slg2@nrc.gov.*

SUPPLEMENTARY INFORMATION:

I. Introduction

The Nuclear Regulatory Commission (NRC) is issuing a license amendment to Princeton HealthCare System for Materials License No. 29–06750–01, to authorize release of its facility at Princeton House Behavioral Health, 905 Herrontown Road in Princeton, New Jersey for unrestricted use. NRC has prepared an Environmental Assessment (EA) in support of this action in accordance with the requirements of 10 CFR Part 51. Based on the EA, the NRC has concluded that a Finding of No Significant Impact (FONSI) is appropriate. The amendment will be issued following the publication of this Notice.

II. EA Summary

The purpose of the action is to authorize the release of the licensee's facility at Princeton House Behavioral Health, 905 Herrontown Road in Princeton, New Jersey, for unrestricted use. Princeton HealthCare System was authorized by NRC from July 21, 1993, to use radioactive materials at this site for research and development involving absorption, dilution, metabolism, and excretion studies in humans, in association with Bristol Myers Squibb. In 1998, Princeton HealthCare System ceased operations with licensed materials at the Princeton House Behavioral Health site, and in 2004 requested that NRC release the facility for unrestricted use. Princeton HealthCare System has conducted surveys of the facility and determined that the facility meets the license termination criteria in Subpart E of 10 CFR Part 20.

The NRC staff has prepared an EA in support of the license amendment. The facility was remediated and surveyed prior to the licensee requesting the license amendment. The NRC staff has reviewed the information and final status survey submitted by Princeton HealthCare System. Based on its review, the staff has determined that there are no additional remediation activities necessary to complete the proposed action. Therefore, the staff considered the impact of the residual radioactivity at the facility and concluded that since the residual radioactivity meets the requirements in Subpart E of 10 CFR Part 20, a Finding of No Significant Impact is appropriate.

III. Finding of No Significant Impact

The staff has prepared the EA (summarized above) in support of the license amendment to release the facility at Princeton House Behavioral Health, 905 Herrontown Road Way in Princeton, New Jersey, for unrestricted use. The NRC staff has evaluated Princeton HealthCare System's request and the results of the surveys and has concluded that the completed action complies with the criteria in Subpart E of 10 CFR Part 20. On the basis of the EA, the NRC has concluded that the environmental impacts from the action are expected to be insignificant and has determined not to prepare an environmental impact statement for the action.

IV. Further Information

Documents related to this action, including the application for the license amendment and supporting documentation, are available electronically at the NRC's Electronic Reading Room at *http://www.nrc.gov/reading-rm/adams.html.* From this site, you can access the NRC's Agencywide Document Access and Management System (ADAMS), which provides text and image files of NRC's public documents. The ADAMS accession numbers for the documents related to this Notice are: Environmental Assessment (ML050900333), letter dated November 24, 2004 with attached closeout survey results (ML043410218), and letter dated March 14, 2005 (ML050830030). Persons who do not have access to ADAMS or who encounter problems in accessing the documents located in ADAMS, should contact the NRC PDR Reference staff by telephone at (800) 397–4209 or (301) 415–4737, or by email to *pdr@nrc.gov.* These documents may also be examined, and/or copied for a fee, at the NRC PDR, located at One White Flint North, 11555 Rockville Pike (First Floor), Rockville, MD 20852. The PDR is open from 7:45 a.m. to 4:15 p.m., Monday through Friday, except on Federal Holidays; and at the Region I Office, 475 Allendale Road, King of Prussia, Pennsylvania 19406.

Dated at King of Prussia, Pennsylvania this 10th day of May, 2005.

For the Nuclear Regulatory Commission.

Pamela J. Henderson,

Chief, Medical Branch, Division of Nuclear Materials Safety, Region I.

[FR Doc. E5–2509 Filed 5–18–05; 8:45 am]

BILLING CODE 7590–01–P

NUCLEAR REGULATORY COMMISSION

Advisory Committee on Reactor Safeguards; Subcommittee Meeting on Planning and Procedures; Notice of Meeting

The ACRS Subcommittee on Planning and Procedures will hold a meeting on May 31, 2005, Room T–2B1, 11545 Rockville Pike, Rockville, Maryland. The entire meeting will be open to public attendance, with the exception of a portion that may be closed pursuant to 5 U.S.C. 552b(c)(2) and (6) to discuss organizational and personnel matters that relate solely to the internal personnel rules and practices of the ACRS, and information the release of which would constitute a clearly unwarranted invasion of personal privacy.

The agenda for the subject meeting shall be as follows:

Tuesday, May 31, 2005—10 a.m.–11:30 a.m.

The Subcommittee will discuss proposed ACRS activities and related matters. The Subcommittee will gather information, analyze relevant issues and facts, and formulate proposed positions and actions, as appropriate, for deliberation by the full Committee.

Members of the public desiring to provide oral statements and/or written comments should notify the Designated Federal Official, Mr. Sam Duraiswamy (telephone: 301–415–7364) between 7:30 a.m. and 4:15 p.m. (ET) five days prior to the meeting, if possible, so that appropriate arrangements can be made. Electronic recordings will be permitted only during those portions of the meeting that are open to the public.

Further information regarding this meeting can be obtained by contacting the Designated Federal Official between 7:30 a.m. and 4:15 p.m. (ET). Persons planning to attend this meeting are urged to contact the above named individual at least two working days prior to the meeting to be advised of any potential changes in the agenda.

Dated: May 11, 2005.

Michael R. Snodderly,

Acting Branch Chief, ACRS/ACNW.

[FR Doc. E5–2510 Filed 5–18–05; 8:45 am]

BILLING CODE 7590–01–P

NUCLEAR REGULATORY COMMISSION

Advisory Committee on Reactor Safeguards Meeting of the Subcommittee on Plant License Renewal; Notice of Meeting

The ACRS Subcommittee on Plant License Renewal will hold a meeting on May 31, 2005, Room T–2B3, 11545 Rockville Pike, Rockville, Maryland.

The entire meeting will be open to public attendance.

The agenda for the subject meeting shall be as follows:

Tuesday, May 31, 2005—12:30 p.m. until 5 p.m.

The purpose of this meeting is to discuss the License Renewal Application and associated Safety Evaluation Report (SER) with Open Items related to the License Renewal of the Point Beach Nuclear Plant, Units 1 and 2. The Subcommittee will hear presentations by and hold discussions with representatives of the NRC staff, the Nuclear Management Company, LLC, and other interested persons regarding this matter. The Subcommittee will gather information, analyze relevant issues and facts, and formulate proposed positions and actions, as appropriate, for deliberation by the full Committee.

Members of the public desiring to provide oral statements and/or written comments should notify the Designated Federal Official, Mr. Cayetano Santos (telephone 301–415–7270) five days prior to the meeting, if possible, so that appropriate arrangements can be made. Electronic recordings will be permitted.

Further information regarding this meeting can be obtained by contacting the Designated Federal Official between 7:30 a.m. and 4:15 p.m. (ET). Persons planning to attend this meeting are urged to contact the above named individual at least two working days prior to the meeting to be advised of any potential changes to the agenda.

Dated: May 11, 2005.

Michael R. Snodderly,

Acting Branch Chief, ACRS/ACNW.

[FR Doc. E5–2511 Filed 5–18–05; 8:45 am]

BILLING CODE 7590–01–P

SECURITIES AND EXCHANGE COMMISSION

[Release Nos. IC–26867; File No. S7–11–04]

RIN 3235–AJ17

Mutual Fund Redemption Fees

AGENCY: Securities and Exchange Commission.

ACTION: Notice of OMB Approval of Collections of Information.

FOR FURTHER INFORMATION CONTACT: William C. Middlebrooks, Jr., Senior Counsel, Office of Regulatory Policy, Division of Investment Management, (202) 551–6792, at the Securities and Exchange Commission, 450 Fifth Street, NW., Washington, DC 20549–0506.

SUPPLEMENTARY INFORMATION: The Office of Management and Budget has approved the collection of information requirements described in the release entitled ''Mutual Fund Redemption Fees.'' [1] This collection is titled ''Rule 22c–2'' (OMB Control No. 3235–0620).

Dated: May 13, 2005.

J. Lynn Taylor,

Assistant Secretary.

[FR Doc. 05–9970 Filed 5–18–05; 8:45 am]

BILLING CODE 8010–01–P

SECURITIES AND EXCHANGE COMMISSION

[File No. 500–1]

In Sino Silver Corp.; Order of Suspension of Trading

May 17, 2005.

It appears to the Securities and Exchange Commission that the public interest and the protection of investors require a suspension of trading in the securities of Sino Silver Corp. (''Sino''), trading under the stock symbol SSLV on the Over-the-Counter Bulletin Board (''OTCBB''). The Commission has concerns about the accuracy and completeness of information about Sino contained in press releases and public filings with the Commission relating to a change in control over Sino. In addition, the Commission is concerned that Sino, its affiliates, and others may be engaged in the unlawful distribution of restricted Sino securities through the OTCBB.

The Commission is of the opinion that the public interest and the protection of investors require a suspension of trading in the securities of the above listed company.

Therefore, it is ordered, pursuant to Section 12(k) of the Securities Exchange Act of 1934, that trading in the above listed company is suspended for the period from 9:30 a.m. EST, May 17, 2005 through 11:59 p.m. EST, on May 31, 2005.

By the Commission.

Jonathan G. Katz,

Secretary.

[FR Doc. 05–10091 Filed 5–17–05; 11:39 am]

BILLING CODE 8010–01–P

SECURITIES AND EXCHANGE COMMISSION

[Release No. 34–51689; File No. SR–Amex–2005–039]

Self-Regulatory Organizations; American Stock Exchange LLC; Notice of Filing and Immediate Effectiveness of Proposed Rule Change Relating to Revisions to the Series 4 Examination Program

May 12, 2005.

Pursuant to Section 19(b)(1) of the Securities Exchange Act of 1934 (''Act'') [1] and Rule 19b–4 thereunder,[2] notice is hereby given that on April 8, 2005, the American Stock Exchange LLC (''Amex'' or ''Exchange'') filed with the Securities and Exchange Commission (''Commission'') the proposed rule change as described in Items I, II, and III below, which Items have been prepared by Amex. Amex has designated the proposed rule change as one constituting a stated policy, practice, or interpretation with respect to the meaning, administration, or enforcement of an existing rule of Amex pursuant to Section 19(b)(3)(A)(i) of the Act [3] and Rule 19b–4(f)(1) thereunder,[4] which renders the proposal effective upon filing with the Commission. The Commission is publishing this notice to solicit comments on the proposed rule change from interested persons.

I. Self-Regulatory Organization's Statement of the Terms of Substance of the Proposed Rule Change

Amex is filing revisions to the study outline and selection specifications for the Limited Principal—Registered Options (Series 4) examination (''Series 4 Examination''). The proposed revisions update the material to reflect changes to the laws, rules, and regulations covered by the Series 4 Examination.

[1] Investment Company Act Rel. No. 26782 (Mar. 11, 2005) [70 FR 13328 (Mar. 18, 2005)].

[1] 15 U.S.C. 78s(b)(1).

[2] 17 CFR 240.19b–4.

[3] 15 U.S.C. 78s(b)(3)(A)(i).

[4] 17 CFR 240.19b–4(f)(1).

The revised study outline is filed with the proposed rule change. However, Amex has omitted the Series 4 Examination selection specifications from this filing and has submitted the specifications under separate cover to the Commission with a request for confidential treatment pursuant to Rule 24b–2 under the Act.[5]

II. Self-Regulatory Organization's Statement of the Purpose of, and Statutory Basis for, the Proposed Rule Change

In its filing with the Commission, Amex included statements concerning the purpose of and basis for the proposed rule change and discussed any comments it received on the proposed rule change. The text of these statements may be examined at the places specified in Item IV below. Amex has prepared summaries, set forth in Sections A, B, and C below, of the most significant aspects of such statements.

A. Self-Regulatory Organization's Statement of the Purpose of, and Statutory Basis for, the Proposed Rule Change

1. Purpose

Amex Rule 920 states that a member organization shall not transact any business with the public in option contracts unless those persons engaged in the management of the member organization's business pertaining to option contracts are registered with and approved by the Exchange as Options Principals. Additionally, no individual member shall transact any business directly with the public in option contracts unless he is registered with and approved by the Exchange as an Options Principal. The Series 4 Examination tests a candidate's knowledge of options trading generally, the Amex rules applicable to the trading of option contracts, and the rules of registered clearing agencies for options. The Series 4 Examination covers, among other things, equity options, foreign currency options, index options, and options on government and mortgage-backed securities.

The Series 4 Examination is shared by the Amex and the following SROs: the National Association of Securities Dealers, Inc. (''NASD''), the Chicago Board Options Exchange, Incorporated (''CBOE''), the New York Stock Exchange, Inc. (''NYSE''), the Pacific Exchange, Inc. (''PCX''), and the Philadelphia Stock Exchange, Inc. (''PHLX''). NASD has filed with the Commission similar revisions to the study outline and selection specifications for the Series 4 Examination,[6] and Amex understands that the other SROs will be filing similar proposals shortly.

A committee of industry representatives, together with the staff of Amex and the SROs, recently undertook a periodic review of the Series 4 Examination and study outline and selection specifications. As a result of this review and as part of an ongoing effort to align the Series 4 Examination more closely to the supervisory duties of a Series 4 principal, Amex is proposing to modify the content of the Series 4 Examination to track the functional workflow of a Series 4 principal. More specifically, Amex is proposing to revise the main section headings and the number of questions on each section of the Series 4 Examination study outline as follows: Options Investment Strategies, decreased from 35 to 34 questions; Supervision of Sales Activities and Trading Practices, increased from 71 to 75 questions; and Supervision of Employees, Business Conduct, and Recordkeeping and Reporting Requirements, decreased from 19 to 16. The revised Series 4 Examination continues to cover the areas of knowledge required to supervise options activities.

Amex is proposing similar changes to the corresponding sections of the Series 4 Examination selection specifications and question bank. The number of questions on the Series 4 Examination will remain at 125 and candidates will have three hours to complete the exam. Also, each candidate must correctly answer 70 percent of the questions to receive a passing grade.

2. Statutory Basis

The Exchange believes that the proposed rule change is consistent with Section 6 of the Act[7] in general and furthers the objectives of Section 6(c)(3)[8] which authorize Amex to prescribe standards of training, experience and competence for persons associated with Amex members.

B. Self-Regulatory Organization's Statement on Burden on Competition

The Exchange believes that the proposed rule change will impose no burden on competition that is not necessary or appropriate in furtherance of the purposes of the Act, as amended.

C. Self-Regulatory Organization's Statement on Comments on the Proposed Rule Change Received From Members, Participants, or Others

No written comments were either solicited or received by the Exchange on this proposal.

III. Date of Effectiveness of the Proposed Rule Change and Timing for Commission Action

The proposed rule change has become effective pursuant to Section 19(b)(3)(A)(i) of the Act[9] and Rule 19b–4(f)(1) thereunder,[10] in that the proposed rule change constitutes a stated policy, practice, or interpretation with respect to the meaning, administration, or enforcement of an existing rule of the Amex. NASD proposes to implement its revisions to the study outline and selection specifications with respect to the Series 4 Examination by no later than April 29, 2005. Amex will announce the revisions to the study outline and selection specifications for the Series 4 Examination and the implementation date in a *Notice to Members* prior to the implementation date.[11]

At any time within 60 days of the filing of the proposed rule change, the Commission may summarily abrogate such rule change if it appears to the Commission that such action is necessary or appropriate in the public interest, for the protection of investors, or otherwise in furtherance of the purposes of the Act.

IV. Solicitation of Comments

Interested persons are invited to submit written data, views and arguments concerning the foregoing, including whether the proposed rule change is consistent with the Act. Comments may be submitted by any of the following methods:

Electronic Comments

- Use the Commission's Internet comment form (*http://www.sec.gov/rules/sro.shtml*); or
- Send an e-mail *to rule-comments@sec.gov.* Please include File Number SR–Amex–2005–039 on the subject line.

Paper Comments

- Send paper comments in triplicate to Jonathan G. Katz, Secretary, Securities and Exchange Commission, 450 Fifth Street, NW., Washington, DC 20549–0609.

[5] 17 CFR 240.24b–2.

[6] *See* Securities Exchange Act Release No. 51216 (February 16, 2005), 70 FR 8866 (February 23, 2005) (SR–NASD–2005–025).

[7] 15 U.S.C. 78f.

[8] 15 U.S.C. 78f(c)(3).

[9] 15 U.S.C. 78s(b)(3)(A)(i).

[10] 17 CFR 240.19b–4(f)(1).

[11] *See* Securities Exchange Act Release No. 51690 (May 12, 2005) (SR–Amex–2005–045) (delaying implementation of this change).

All submissions should refer to File Number SR–Amex–2005–039. This filenumber should be included on the subject line if e-mail is used. To help the Commission process and review your comments more efficiently, please use only one method. The Commission will post all comments on the Commission's Internet Web site (*http://www.sec.gov/rules/sro.shtml*). Copies of the submission, all subsequent amendments, all written statements with respect to the proposed rule change that are filed with the Commission, and all written communications relating to the proposed rule change between the Commission and any person, other than those that may be withheld from the public in accordance with the provisions of 5 U.S.C. 552, will be available for inspection and copying at the principal office of the Amex. All comments received will be posted without change; the Commission does not edit personal identifying information from submissions. You should submit only information that you wish to make available publicly. All submissions should refer to the File Number SR–Amex–2005–039 and should be submitted on or before June 9, 2005.

For the Commission, by the Division of Market Regulation, pursuant to delegated authority.[12]

J. Lynn Taylor,

Assistant Secretary.

[FR Doc. E5–2501 Filed 5–18–05; 8:45 am]

BILLING CODE 8010–01–P

[12] 17 CFR 200.30–3(a)(12).

SECURITIES AND EXCHANGE COMMISSION

[Release No. 34–51690; File No. SR–Amex–2005–045]

Self-Regulatory Organizations; American Stock Exchange LLC; Notice of Filing and Immediate Effectiveness of Proposed Rule Change to Delay Implementation Date of Revisions to the Series 4 Examination Program

May 12, 2005.

Pursuant to section 19(b)(1) of the Securities Exchange Act of 1934 (''Act'')[1] and Rule 19b–4 thereunder,[2] notice is hereby given that on April 27, 2005, the American Stock Exchange LLC (''Amex'' or ''Exchange'') filed with the Securities and Exchange Commission (''SEC'' or ''Commission'') the proposed rule change as described in items I, II, and III below, which items have been prepared by Amex. Amex has designated the proposed rule change as one constituting a stated policy, practice, or interpretation with respect to the meaning, administration, or enforcement of an existing rule of the self-regulatory organization pursuant to section 19(b)(3)(A)(i) of the Act[3] and Rule 19b–4(f)(1) thereunder,[4] which renders the proposal effective upon filing with the Commission. The Commission is publishing this notice to solicit comments on the proposed rule change from interested persons.

[1] 5 U.S.C. 78s(b)(1).

[2] 17 CFR 240.19–4.

[3] 15 U.S.C. 78s(b)(3)(A)(i).

[4] 17 CFR 240.19b–4(f)(1).

I. Self-Regulatory Organization's Statement of the Terms of Substance of the Proposed Rule Change

Amex proposes to delay until no later than November 30, 2005 the implementation date of the recent revisions to the Limited Principal—Registered Options (Series 4) examination program, including the study outline and selection specifications (''Series 4 Examination'').

II. Self-Regulatory Organization's Statement of the Purpose of, and Statutory Basis for, the Proposed Rule Change

In its filing with the Commission, Amex included statements concerning the purpose of and basis for the proposed rule change and discussed any comments it received on the proposed rule change. The text of these statements may be examined at the places specified in item IV below. Amex has prepared summaries, set forth in sections A, B, and C below, of the most significant aspects of such statements.

A. Self-Regulatory Organization's Statement of the Purpose of, and Statutory Basis for, the Proposed Rule Change

1. Purpose

On April 8, 2005, Amex filed with the SEC for immediate effectiveness revisions to the Series 4 Examination.[5] The Series 4 Examination is an industry-wide examination that qualifies an individual to function as a Registered Options Principal. The Series 4 Examination is shared by Amex and the following SROs: The National Association of Securities Dealers, Inc. (''NASD''), the Chicago Board Options Exchange, Incorporated, the New York Stock Exchange, Inc., the Pacific Exchange, Inc. (''PCX''), and the Philadelphia Stock Exchange, Inc. NASD and PCX filed with the SEC similar revisions to the Series 4 Examination.[6] NASD originally had proposed to implement the Series 4 Examination revisions by no later than April 29, 2005. However, due to administrative issues, NASD is proposing to delay until no later than November 30, 2005, the implementation date of the revisions. As such, Amex will announce the revisions to the Series 4 Examination and the implementation date in a *Notice to Members* to be published no later than October 31, 2005.

Amex understands that NASD and PCX have filed with the SEC similar proposed rule changes to delay until no later than November 30, 2005, the implementation date of the revisions to the Series 4 Examination.[7]

2. Statutory Basis

The Exchange believes that the proposed rule change is consistent with section 6 of the Act[8] in general and furthers the objectives of section 6(c)(3)[9] which authorize Amex to prescribe standards of training, experience and competence for persons associated with Amex members.

B. Self-Regulatory Organization's Statement on Burden on Competition

The Exchange believes that the proposed rule change will impose no burden on competition that is not necessary or appropriate in furtherance of the purposes of the Act, as amended.

C. Self-Regulatory Organization's Statement on Comments on the Proposed Rule Change Received From Members, Participants, or Others

No written comments were either solicited or received by the Exchange on this proposal.

III. Date of Effectiveness of the Proposed Rule Change and Timing for Commission Action

The proposed rule change has become effective pursuant to section 19(b)(3)(A)(i) of the Act[10] and Rule 19b–4(f)(1) thereunder,[11] in that the proposed rule change constitutes a stated policy, practice, or interpretation with respect to the meaning, administration, or enforcement of an existing rule of the Amex. NASD

[5] *See* Securities Exchange Act Release No. 51689 (May 12, 2005) (SR–Amex–2005–039).

[6] *See* Securities Exchange Act Release No. 51216 (February 16, 2005), 70 FR 8866 (February 23, 2005) (SR–NASD–2005–025); *see also* SR–PCX–2005–51.

[7] *See* Securities Exchange Act Release No. 51688 (May 12, 2005) (SR–NASD–2005–053) and SR–PCX–2005–057.

[8] 15 U.S.C. 78f.

[9] 15 U.S.C. 78f(c)(3).

[10] 15 U.S.C. 78s(b)(3)(A)(i).

[11] 17 CFR 240.19b–4(f)(1).

proposes to implement the Series 4 Examination revisions by no later than November 30, 2005. Amex will announce the revisions to the Series 4 Examination and the implementation date in a *Notice to Members* to be published no later than October 31, 2005.

At any time within 60 days of the filing of the proposed rule change, the Commission may summarily abrogate such rule change if it appears to the Commission that such action is necessary or appropriate in the public interest, for the protection of investors, or otherwise in furtherance of the purposes of the Act.

IV. Solicitation of Comments

Interested persons are invited to submit written data, views and arguments concerning the foregoing, including whether the proposed rule change is consistent with the Act. Comments may be submitted by any of the following methods:

Electronic Comments

- Use the Commission's Internet comment form (*http://www.sec.gov/rules/sro.shtml*); or
- Send an e-mail to *rule-comments@sec.gov.* Please include File Number SR–Amex–2005–045 on the subject line.

Paper Comments

- Send paper comments in triplicate to Jonathan G. Katz, Secretary, Securities and Exchange Commission, 450 Fifth Street, NW., Washington, DC 20549–0609.

All submissions should refer to File Number SR–Amex–2005–045. This file number should be included on the subject line if e-mail is used. To help the Commission process and review your comments more efficiently, please use only one method. The Commission will post all comments on the Commission's Internet Web site (*http://www.sec.gov/rules/sro.shtml*). Copies of the submission, all subsequent amendments, all written statements with respect to the proposed rule change that are filed with the Commission, and all written communications relating to the proposed rule change between the Commission and any person, other than those that may be withheld from the public in accordance with the provisions of 5 U.S.C. 552, will be available for inspection and copying at the principal office of the Amex. All comments received will be posted without change; the Commission does not edit personal identifying information from submissions. You should submit only information that you wish to make available publicly. All submissions should refer to the File Number SR–Amex–2005–045 and should be submitted on or before June 9, 2005.

For the Commission, by the Division of Market Regulation, pursuant to delegated authority.[12]

J. Lynn Taylor,

Assistant Secretary.

[FR Doc. E5–2502 Filed 5–18–05; 8:45 am]

BILLING CODE 8010–01–P

SECURITIES AND EXCHANGE COMMISSION

[Release No. 34–51687; File No. SR–CBOE–2005–36]

Self-Regulatory Organizations; Chicago Board Options Exchange, Inc.; Notice of Filing and Immediate Effectiveness of Proposed Rule Change and Amendment Nos. 1 and 2 Thereto Relating to Waiver of May 2005 Member Dues for CBOE Market-Makers

May 12, 2005.

Pursuant to Section 19(b)(1) of the Securities Exchange Act of 1934 (''Act''),[1] and Rule 19b–4 thereunder,[2] notice is hereby given that on May 2, 2005, the Chicago Board Options Exchange, Inc. (''CBOE'' or ''Exchange'') filed with the Securities and Exchange Commission (''Commission'') the proposed rule change as described in Items I, II and III below, which Items have been prepared by the CBOE. On May 4, 2005, the CBOE submitted Amendment No. 1 to the proposed rule change.[3] On May 5, 2005, the CBOE submitted Amendment No. 2 to the proposed rule change.[4] The CBOE has designated this proposal as one establishing or changing a due, fee, or other charge imposed by the CBOE under Section 19(b)(3)(A)(ii) of the Act,[5] and Rule 19b–4(f)(2) thereunder,[6] which renders the proposal effective upon filing with the Commission. The Commission is publishing this notice to solicit comments on the proposed rule change, as amended, from interested persons.

I. Self-Regulatory Organization's Statement of the Terms of Substance of the Proposed Rule Change

The CBOE proposes to amend its Fees Schedule to waive May 2005 member dues for CBOE market-makers who automatically execute 2000 contracts or more during May 2005 in hybrid options classes. Below is the text of the proposed rule change, as amended. Proposed new language is *italicized*; proposed deletions are in [brackets].

CHICAGO BOARD OPTIONS EXCHANGE, INC.

FEES SCHEDULE

[APRIL 25] *MAY 2*, 2005

1.–4. Unchanged.
Notes: (1)–(15) Unchanged.
5.–8. Unchanged.

9. MEMBER DUES* $450 per month

** The Exchange will waive May 2005 member dues for CBOE market-makers who automatically execute 2000 contracts or more (through the use of ''M'' orders) during May 2005 in hybrid options classes, i.e., all equity options classes and the MNX, QQQQ, Reduced Value Russell 2000 and SPDR options classes.*

10.–23. Unchanged.

* * * * *

II. Self-Regulatory Organization's Statement of the Purpose of, and Statutory Basis for, the Proposed Rule Change

In its filing with the Commission, the CBOE included statements concerning the purpose of and basis for its proposed rule change and discussed any comments it had received on the proposed rule change. The text of these statements may be examined at the places specified in Item IV below. The CBOE has prepared summaries, set forth in Sections A, B and C below, of the most significant aspects of such statements.

A. Self-Regulatory Organization's Statement of the Purpose of, and Statutory Basis for, the Proposed Rule Change

1. Purpose

On January 10, 2005, the Commission approved a CBOE rule proposal (SR–CBOE–2005–01)[7] to allow CBOE market participants[8] the ability to submit

---

[12] 17 CFR 200.30–3(a)(12).

[1] 15 U.S.C. 78s(b)(1).

[2] 17 CFR 240.19b–4.

[3] In Amendment No. 1, the CBOE amended the rule text of the proposed rule change to clarify that the dues waiver applies to the Reduced Value Russell 2000 index options, which are a hybrid options class.

[4] In Amendment No. 2, the CBOE made technical corrections to the rule text of the proposed rule change.

[5] 15 U.S.C. 78s(b)(3)(A)(ii).

[6] 17 CFR 240.19b–4(f)(2).

[7] *See* Securities Exchange Act Release No. 51003 (January 10, 2005), 70 FR 2682 (January 14, 2005).

[8] CBOE Rule 6.45A defines a market participant as a market-maker, an in-crowd DPM, an e-DPM, a

orders for automatic execution. As a result of that rule change, Market-Makers, DPMs, eDPMs and RMMs (collectively, ''CBOE Market-Makers'') for the first time have the ability to submit orders that are eligible to execute automatically against resting orders in the electronic book in hybrid options classes (*i.e.*, all equity options classes, the CBOE Mini-NDX index option classes (''MNX''), the option classes based on the Nasdaq-100's Depository Receipts (''QQQQ''), the Reduced Value Russell 2000 index option classes,[9] and the option classes based on Standard & Poor's Depository Receipts (''SPDRs options'')). An order submitted for automatic execution by a CBOE Market-Maker is marked with an ''M'' origin code.

As part of a marketing campaign to make CBOE Market-Makers aware of the benefits of this improved access to orders in the book, the Exchange proposes to waive May 2005 member dues for CBOE Market-Makers who automatically execute 2000 contracts or more (through the use of ''M'' orders) during May 2005 in hybrid options classes. Qualifying members would receive a rebate of member dues. The rebate will be processed in June as a credit on billing statements produced at month-end.

The Exchange believes that the proposed dues waiver will be successful in attracting additional liquidity to the CBOE.

2.Statutory Basis

The Exchange believes that the proposed rule change, as amended, is consistent with Section 6(b) of the Act,[10] in general, and furthers the objectives of Section 6(b)(4) of the Act,[11] in particular, in that it is designed to provide for the equitable allocation of reasonable dues, fees, and other charges among CBOE's members.

B.Self-Regulatory Organization's Statement on Burden on Competition

The CBOE does not believe that the proposed rule change, as amended, will impose any burden on competition that is not necessary or appropriate in furtherance of the purposes of the Act.

C.Self-Regulatory Organization's Statement on Comments on the Proposed Rule Change Received From Members, Participants or Others

No written comments were solicited or received with respect to the proposed rule change.

III. Date of Effectiveness of the Proposed Rule Change and Timing for Commission Action

Because the foregoing rule change, as amended, establishes or changes a due, fee, or other charge imposed by the Exchange, it has become effective pursuant to Section 19(b)(3)(A)(ii) of the Act[12] and subparagraph (f)(2) of Rule 19b–4 thereunder.[13] Accordingly, the proposal will take effect upon filing with the Commission.

At any time within 60 days of the filing of the proposed rule change, as amended, the Commission may summarily abrogate such rule change if it appears to the Commission that such action is necessary or appropriate in the public interest, for the protection of investors, or otherwise in furtherance of the purposes of the Act.[14]

IV. Solicitation of Comments

Interested persons are invited to submit written data, views, and arguments concerning the foregoing, including whether the proposed rule change is consistent with the Act. Comments may be submitted by any of the following methods:

Electronic Comments

- Use the Commission's Internet comment form (*http://www.sec.gov/rules/sro.shtml*); or
- Send an e-mail to rule-comments@sec.gov. Please include File Number SR–CBOE–2005–36 on the subject line.

Paper Comments

- Send paper comments in triplicate to Jonathan G. Katz, Secretary, Securities and Exchange Commission, 450 Fifth Street, NW., Washington, DC 20549–0609.

All submissions should refer to File Number SR–CBOE–2005–36. This file number should be included on the subject line if e-mail is used. To help the Commission process and review your comments more efficiently, please use only one method. The Commission will post all comments on the Commission's Internet Web site (*http://www.sec.gov/rules/sro.shtml*). Copies of the submission, all subsequent amendments, all written statements with respect to the proposed rule change, as amended, that are filed with the Commission, and all written communications relating to the proposed rule change between the Commission and any person, other than those that may be withheld from the public in accordance with the provisions of 5 U.S.C. 552, will be available for inspection and copying in the Commission's Public Reference Room. Copies of the filing also will be available for inspection and copying at the principal office of the CBOE. All comments received will be posted without change; the Commission does not edit personal identifying information from submissions. You should submit only information that you wish to make available publicly. All submissions should refer to File Number SR–CBOE–2005–36 and should be submitted on or before June 9, 2005.

For the Commission, by the Division of Market Regulation, pursuant to delegated authority.[15]

J. Lynn Taylor,

Assistant Secretary.

[FR Doc. E5–2500 Filed 5–18–05; 8:45 am]

BILLING CODE 8010–01–P

Remote Market-Maker and a floor broker representing orders in the trading crowd.

[9] *See* Amendment No. 1, *Supra* note 3.

[10] 15 U.S.C. 78f(b).

[11] 15 U.S.C. 78f(b)(4).

[12] 15 U.S.C. 78s(b)(3)(A)(ii).

[13] 17 CFR 240.19b–4(f)(2).

[14] For purposes of calculating the 60-day period within which the Commission may summarily abrogate the proposed rule change, as amended, under Section 19(b)(3)(C) of the Act, the Commission considers the period to commence on May 5, 2005, the date on which the Exchange submitted Amendment No. 2. *See* 15 U.S.C. 78s(b)(3)(C).

[15] 17 CFR 200.30–3(a)(12).

SECURITIES AND EXCHANGE COMMISSION

[Release No. 34–51692; File No. SR–CHX–2005–04]

Self-Regulatory Organizations; Chicago Stock Exchange, Inc.; Order Granting Approval of Proposed Rule Change and Amendment Nos. 1 and 2 Thereto, To Clarify That Specialists May Not Charge Commissions With Respect to the Execution of CHXpress Orders

May 12, 2005.

On March 1, 2005, the Chicago Stock Exchange, Inc. (''CHX'' or ''Exchange''), filed with the Securities and Exchange Commission (''Commission'') a proposed rule change pursuant to section 19(b)(1) of the Securities Exchange Act of 1934 (''Act'')[1] and Rule 19b–4 thereunder,[2] to amend its rules to clarify that a CHX specialist is not permitted to charge a commission for the execution of CHXpress(tm) orders.

[1] 15 U.S.C. 78s(b)(1).

[2] 17 CFR 240.19b–4.

On March 21, 2005 and March 30, 2005, the Exchange filed Amendment Nos. 1 and 2, respectively, to the proposal. The proposed rule change, as amended, was published for comment in the **Federal Register** on April 7, 2005.[3] The Commission received no comments on the proposal. This order approves the proposed rule change, as amended.

The Exchange is rolling out a new, automated functionality, CHXpress, which, according to the Exchange, is designed to provide additional opportunities for the Exchange's participants to seek and receive liquidity through automated executions of orders at the Exchange.[4] With a few exceptions, CHXpress orders will be executed immediately and automatically against same or better-priced orders in the specialist's book, or against the specialist's quote (when CHXpress is available).[5] If a CHXpress order cannot be immediately executed, it will be placed in the specialist's book for display or later execution.[6] The handling of CHXpress orders within the Exchange's systems is entirely automatic. CHX specialists do not provide CHXpress orders with the execution guarantees that might otherwise be available to agency limit orders,[7] and CHX specialists also would not be required to seek liquidity for CHXpress orders in other markets. This proposal clarifies that a CHX specialist would not be permitted to charge a commission in connection with the execution of a CHXpress order.

The Commission has reviewed carefully the proposed rule change, as amended, and finds that it is consistent with the requirements of Section 6 of the Act[8] and the rules and regulations thereunder applicable to a national securities exchange.[9] In particular, the Commission finds that the proposed rule change is consistent with sections 6(b)(5) and 6(e)(1) of the Act,[10] because it is designed to promote just and equitable principles of trade, to remove impediments to and perfect the mechanism of a free and open market and a national market system, and, in general, to protect investors and the public interest; and is not designed to impose any schedule or fix rates of commissions, allowances, discounts, or other fees to be charged by its members. The Commission also believes that the proposed rule change is consistent with section 11(A)(a)(1)(C) of the Act,[11] which states that it is in the public interest and appropriate for the protection of investors and the maintenance of fair and orderly markets to assure, among other things, economically efficient execution of securities transactions, and fair competition among brokers and dealers, among exchange markets, and between exchange markets and markets other than exchange markets.

The Commission believes that the Exchange's proposal is consistent with section 6(e) of the Act.[12] Section 6(e) of the Act[13] was adopted by Congress in 1975 to statutorily prohibit the fixed minimum commission rate system. As noted in a report of the House of Representatives, one of the purposes of the legislation was to ''reverse the industry practice of charging fixed rates of commissions for transactions on the securities exchanges.''[14] The fixed minimum commission rate system allowed exchanges to set minimum commission rates that their members had to charge their customers, but allowed members to charge more. CHX's proposal, by contrast, does not establish a minimum commission rate, but instead prohibits commissions in circumstances in which the CHX specialist does not handle the order. Accordingly, the Commission does not believe that the Exchange's proposal to limit the fees charged by CHX specialists constitutes fixing commissions, allowances, discounts, or other fees for purposes of Section 6(e)(1) of the Act.[15] In addition, the Commission believes that the Exchange's proposal is reasonable because it prohibits a CHX specialist from charging a commission for an order executed without assistance or handling by the CHX specialist. In this regard, the Commission notes that it has not viewed a self-regulatory organization's limits on fees that its members may charge, even when a member acts as agent, as inconsistent with section 6(e) of the Act.[16] In addition, the Exchange's limits on fees that CHX specialists may charge applies only to members who choose to be specialists on the Exchange. Therefore, CHX is not fixing fees generally; it is merely imposing a condition, which is consistent with the Act, on a member's appointment as a specialist.

For the foregoing reasons, the Commission finds that the proposed rule change is consistent with the Act and the rules and regulations thereunder applicable to a national securities exchange, and, in particular, with sections 6(b)(5) and 6(e)(1) of the Act.[17] It is therefore ordered, pursuant to section 19(b)(2) of the Act,[18] that the proposed rule change (SR–CHX–2005–04), as amended, is approved.

For the Commission, by the Division of Market Regulation, pursuant to delegated authority.[19]

J. Lynn Taylor,

Assistant Secretary.

[FR Doc. E5–2504 Filed 5–18–05; 8:45 am]

BILLING CODE 8010–01–P

[3] *See* Securities Exchange Act Release No. 51465 (April 1, 2005), 70 FR 17743.

[4] *See* Securities Exchange Act Release No. 50481 (September 30, 2004); 69 FR 60197 (October 7, 2004) (SR–CHX–2004–12).

[5] *See* CHX Article XX, Rule 37(b)(11)(C).

[6] A CHXpress order will be instantaneously and automatically displayed when it constitutes the best bid or offer in the CHX book. *See* CHX Article XX, Rule 37(b)(11)(D).

[7] *See* CHX Article XX, Rule 37(b)(11)(E)–(F).

[8] 15 U.S.C. 78f.

[9] In approving this proposal, the Commission has considered the proposed rule's impact on efficiency, competition, and capital formation. 15 U.S.C. 78c(f). The Commission notes that it previously approved similar proposed rule changes filed by the New York Stock Exchange, Inc. (''NYSE'') to prohibit a specialist on the NYSE from charging ''floor brokerage'' (*i.e.*, a commission imposed on exchange floor brokers) for the execution of an order received by the specialist via the NYSE's automated order routing system, known as SuperDot. *See* Securities Exchange Act Release Nos. 42727 (April 27, 2000), 65 FR 26258 (May 5, 2000); 42694 (April 17, 2000), 65 FR 24245 (April 25, 2000); and 42184 (November 30, 1999), 64 FR 68710 (December 8, 1999). In addition, the Commission recently approved a proposed rule change submitted by the Chicago Board Options Exchange (''CBOE'') to prohibit Designated Primary Market Makers (''DPMs'') from charging a brokerage commission for an order, or the portion of an order: (i) For which the DPM was not the executing broker, which includes any portion of the order that is automatically executed through a CBOE system; (ii) that is automatically cancelled; or (iii) that is not executed, and not cancelled. *See* Securities Exchange Act Release No. 51235 (February 22, 2005), 70 FR 9687 (February 28, 2005).

[10] 15 U.S.C. 78f(b)(5) and 78f(e)(1).

[11] 15 U.S.C. 78k–1(a)(1)(C).

[12] 15 U.S.C. 78f(e).

[13] *Id.*

[14] H.R. Rep. No. 94–123, 94th Cong., 1st Sess. 42 (1975).

[15] 15 U.S.C. 78f(e)(1).

[16] 15 U.S.C. 78f(e)(1).

[17] 15 U.S.C. 78f(b)(5) and 78f(e)(1).

[18] 15 U.S.C. 78s(b)(2).

[19] 17 CFR 200.30–3(a)(12).

SECURITIES AND EXCHANGE COMMISSION

[Release No. 34–51688; File No. SR–NASD–2005–053]

Self-Regulatory Organizations; National Association of Securities Dealers, Inc.; Notice of Filing and Immediate Effectiveness of Proposed Rule Change To Delay Implementation Date of Revisions to the Series 4 Examination Program

May 12, 2005.

Pursuant to section 19(b)(1) of the Securities Exchange Act of 1934

(''Act'')[1] and Rule 19b–4 thereunder,[2] notice is hereby given that on April 18, 2005, the National Association of Securities Dealers, Inc. (''NASD'') filed with the Securities and Exchange Commission (''SEC'' or ''Commission'') the proposed rule change as described in items I, II, and III below, which items have been prepared by NASD. NASD has designated the proposed rule change as one constituting a stated policy, practice, or interpretation with respect to the meaning, administration, or enforcement of an existing rule of NASD pursuant to section 19(b)(3)(A)(i) of the Act[3] and Rule 19b–4(f)(1) thereunder,[4] which renders the proposal effective upon filing with the Commission. The Commission is publishing this notice to solicit comments on the proposed rule change from interested persons.

I. Self-Regulatory Organization's Statement of the Terms of Substance of the Proposed Rule Change

NASD proposes to delay until no later than November 30, 2005 the implementation date of the recent revisions to the Limited Principal—Registered Options (Series 4) examination program, including the study outline and selection specifications (the ''Series 4 Examination''). NASD is not proposing any textual changes to the By-Laws, Schedules to the By-Laws, or Rules of NASD.

II. Self-Regulatory Organization's Statement of the Purpose of, and Statutory Basis for, the Proposed Rule Change

In its filing with the Commission, NASD included statements concerning the purpose of and basis for the proposed rule change. The text of these statements may be examined at the places specified in item IV below. NASD has prepared summaries, set forth in sections A, B, and C below, of the most significant aspects of such statements.

A. Self-Regulatory Organization's Statement of the Purpose of, and Statutory Basis for, the Proposed Rule Change

1. Purpose

On February 9, 2005, NASD filed with the SEC for immediate effectiveness revisions to the Series 4 Examination.[5] The Series 4 Examination is an industry-wide examination that qualifies an individual to function as a Registered Options Principal. The Series 4 Examination is shared by NASD and the following SROs: The American Stock Exchange LLC (''Amex''), the Chicago Board Options Exchange, Incorporated, the New York Stock Exchange, Inc., the Pacific Exchange, Inc. (''PCX''), and the Philadelphia Stock Exchange, Inc. Amex and PCX filed with the SEC similar revisions to the Series 4 Examination.[6] NASD originally had proposed to implement the Series 4 Examination revisions by no later than April 29, 2005. However, due to administrative issues, NASD is proposing to delay until no later than November 30, 2005, the implementation date of the revisions. NASD will announce the revisions to the Series 4 Examination and the implementation date in a Notice to Members to be published no later than October 31, 2005.

NASD understands that Amex and PCX also will file with the SEC similar proposed rule changes to delay until no later than November 30, 2005, the implementation date of the revisions to the Series 4 Examination.

2. Statutory Basis

NASD believes that the proposed rule change is consistent with the provisions of sections 15A(b)(6)[7] and 15A(g)(3) of the Act,[8] which authorize NASD to prescribe standards of training, experience, and competence for persons associated with NASD members.

B. Self-Regulatory Organization's Statement on Burden on Competition

NASD does not believe that the proposed rule change will result in any burden on competition that is not necessary or appropriate in furtherance of the purposes of the Act, as amended.

C. Self-Regulatory Organization's Statement on Comments on the Proposed Rule Change Received From Members, Participants, or Others

Written comments were neither solicited nor received.

III. Date of Effectiveness of the Proposed Rule Change and Timing for Commission Action

The proposed rule change has become effective pursuant to section 19(b)(3)(A)(i) of the Act[9] and Rule 19b–4(f)(1) thereunder,[10] in that the proposed rule change constitutes a stated policy, practice, or interpretation with respect to the meaning, administration, or enforcement of an existing rule of NASD. NASD proposes to implement the Series 4 Examination revisions by no later than November 30, 2005. NASD will announce the revisions to the Series 4 Examination and the implementation date in a Notice to Members to be published no later than October 31, 2005.

At any time within 60 days of the filing of the proposed rule change, the Commission may summarily abrogate such rule change if it appears to the Commission that such action is necessary or appropriate in the public interest, for the protection of investors, or otherwise in furtherance of the purposes of the Act.

IV. Solicitation of Comments

Interested persons are invited to submit written data, views and arguments concerning the foregoing, including whether the proposed rule change is consistent with the Act. Comments may be submitted by any of the following methods:

Electronic Comments

- Use the Commission's Internet comment form *(http://www.sec.gov/rules/sro.shtml);* or
- Send an e-mail to *rule-comments@sec.gov.* Please include File Number SR–NASD–2005–053 on the subject line.

Paper Comments

- Send paper comments in triplicate to Jonathan G. Katz, Secretary, Securities and Exchange Commission, 450 Fifth Street, NW., Washington, DC 20549–0609.

All submissions should refer to File Number SR–NASD–2005–053. This file number should be included on the subject line if e-mail is used. To help the Commission process and review your comments more efficiently, please use only one method. The Commission will post all comments on the Commission's Internet Web site *(http://www.sec.gov/rules/sro.shtml).* Copies of the submission, all subsequent amendments, all written statements with respect to the proposed rule change that are filed with the Commission, and all written communications relating to the proposed rule change between the Commission and any person, other than those that may be withheld from the public in accordance with the

[1] 15 U.S.C. 78s(b)(1).

[2] 17 CFR 240.19b–4.

[3] 5 U.S.C. 78s(b)(3)(A)(i).

[4] 17 CFR 240.19b–4(f)(1).

[5] *See* Securities Exchange Act Release No. 51216 (February 16, 2005), 70 FR 8866 (February 23, 2005) (SR–NASD–2005–025).

[6] *See* Securities Exchange Act Release No. 51688 (May 12, 2005) (SR–Amex–2005–039); SR–PCX–2005–51.

[7] 15 U.S.C. 78o–3(b)(6).

[8] 15 U.S.C. 78o–3(g)(3).

[9] 15 U.S.C. 78s(b)(3)(A)(i).

[10] 17 CFR 240.19b–4(f)(1).

provisions of 5 U.S.C. 552, will be available for inspection and copying at the principal office of NASD. All comments received will be posted without change; the Commission does not edit personal identifying information from submissions. You should submit only information that you wish to make available publicly. All submissions should refer to the File Number SR–NASD–2005–053 and should be submitted on or before June 9, 2005.

For the Commission, by the Division of Market Regulation, pursuant to delegated authority.[11]

J. Lynn Taylor,

Assistant Secretary.

[FR Doc. E5–2505 Filed 5–18–05; 8:45 am]

BILLING CODE 8010–01–P

SECURITIES AND EXCHANGE COMMISSION

[Release No. 34–51693; File No. SR–NASD–2005–052]

Self-Regulatory Organizations; National Association of Securities Dealers, Inc.; Notice of Filing of Proposed Rule Change and Amendments No. 1 and No. 2 Thereto Relating to Honorarium for Arbitrators Deciding Discovery-Related Motions

May 12, 2005.

Pursuant to section 19(b)(1) of the Securities Exchange Act of 1934 (''Act'')[1] and Rule 19b–4 thereunder,[2] notice is hereby given that the National Association of Securities Dealers, Inc. (''NASD''), through its wholly owned subsidiary, NASD Dispute Resolution, Inc. (''NASD Dispute Resolution'') filed with the Securities and Exchange Commission (''SEC'' or ''Commission'') on April 14, 2005, on April 29, 2005 (Amendment No. 1) and on May 6, 2005, (Amendment No. 2), the proposed rule change as described in items I, II, and III below, which items have been prepared by NASD. The Commission is publishing this notice to solicit comments on the proposed rule change from interested persons.

I. Self-Regulatory Organization's Statement of the Terms of Substance of the Proposed Rule Change

NASD Dispute Resolution is proposing to amend Interpretive Material (IM) 10104 of the NASD Code of Arbitration Procedure (''Code'') to provide payment to arbitrators for deciding discovery-related motions without a hearing.[3] Below is the text of the proposed rule change.[4] Proposed new language is in italics; proposed deletions are in brackets.

* * * * *

IM–10104. Arbitrators' Honorarium

(a) All persons selected to serve as arbitrators pursuant to the Association's Code of Arbitration Procedure shall be paid an honorarium for each hearing session (including a prehearing conference) in which they participate.

(b) The honorarium shall be $200 for each hearing session and $75 per day additional honorarium to the chairperson of the panel. The honorarium for a case not requiring a hearing shall be $125.

(c) The honorarium for travel to a canceled hearing session shall be $50. If a hearing session other than a prehearing conference is adjourned pursuant to Rule 10319(d), each arbitrator shall receive an additional honorarium of $100.

(d) The Director may authorize a higher or additional honorarium for the use of a foreign hearing location.

(e) Payment for Deciding Discovery-Related Motions Without a Hearing Session

(1) NASD will pay each arbitrator an honorarium of $200 to decide a discovery-related motion without a hearing session. This paragraph does not apply to cases administered under Rules 10203 and 10302.

(2) For purposes of paragraph (e)(1), a discovery-related motion and any replies or other correspondence relating to the motion shall be considered to be a single motion.

(3) The panel will allocate the cost of the honoraria under paragraph (e)(1) to the parties pursuant to Rules 10205(c) and 10332(c).

* * * * *

II. Self-Regulatory Organization's Statement of the Purpose of, and Statutory Basis for, the Proposed Rule Change

In its filing with the Commission, NASD included statements concerning the purpose of and basis for the proposed rule change and discussed any comments it received on the proposed rule change. The text of these statements may be examined at the places specified in item IV below. NASD has prepared summaries, set forth in sections (A), (B), and (C) below, of the most significant aspects of such statements.

A. Self-Regulatory Organization's Statement of the Purpose of, and Statutory Basis for, the Proposed Rule Change

1. Purpose

In 2002, NASD Dispute Resolution conducted arbitrator focus groups across the country. One of the consistently raised concerns was the amount of time and effort invested by chairpersons in reviewing and deciding various discovery motions, especially in situations in which the motions are decided without a hearing (*i.e.*, on the papers). Also, Dispute Resolution staff has found that the current lack of compensation for deciding such motions has made it more difficult to recruit current arbitrators to become chairpersons. Currently, arbitrators are not compensated for deciding discovery motions on the papers. Arbitrators are compensated, however, when they conduct pre-hearing conferences to hear argument from parties regarding discovery motions.

NASD is, therefore, proposing to adopt a rule to compensate arbitrators in the amount of $200 (the same amount that is paid for an arbitrator to participate in a pre-hearing conference regarding discovery) to decide discovery motions on the papers. The new rule language states that NASD will pay arbitrators an honorarium of $200 to decide a discovery-related motion without a hearing session. For purposes of this rule, a discovery-related motion and any replies or other correspondence relating to the motion will be considered to be a single motion. If more than one arbitrator considers a discovery-related motion, each arbitrator will receive $200. The panel will allocate the cost of the honoraria as part of the eventual arbitration award. The rule will not apply to simplified cases administered under Rules 10203 and 10302.

2. Statutory Basis

NASD believes that the proposed rule change is consistent with the provisions of sections 15A(b)(5)[5] and 15A(b)(6)[6] of the Act, which require, among other things, that the NASD's rules provide

---

[11] 17 CFR 200.30–3(a)(12).

[1] 15 U.S.C. 78s(b)(1).

[2] 17 CFR 240.19b–4.

[3] On March 15, 2005, NASD filed a proposed rule change to provide written explanations in arbitration awards upon the request of customers, or of associated persons in industry controversies. This proposal amends IM–10104. *See* SR–NASD–2005–032.

[4] This IM will be renumbered as appropriate following Commission approval of the pending revisions to be NASD Code of Arbitration Procedure for Customer Disputes filed on October 15, 2003, and amended on January 3, 2005, January 19, 2005, and april 8, 2005 (SR–NASD–2003–158); and the NASD Code of Arbitration Procedure for Industry Disputes filed on January 16, 2004, and amended on February 26, 2004, January 3, 2005, and April 8, 2005 (SR–NASD–2004–011).

[5] 15 U.S.C. 78o–3(b)(5).

[6] 15 U.S.C. 78o–3(b)(6).

for the equitable allocation of reasonable dues, fees, and other charges among members and issuers and other persons using any facility or system that the NASD operates or controls, and that NASD rules must be designed to prevent fraudulent and manipulative acts and practices, to promote just and equitable principles of trade, and, in general, to protect investors and the public interest. NASD believes that the proposed rule change accomplishes these goals by encouraging arbitrators to decide discovery-related motions on the papers without the need for a pre-hearing conference, thereby expediting the pace of arbitrations, which should reduce the time between the filing of an arbitration claim and the rendering of an award. Moreover, the panel would allocate the honorarium for deciding a discovery-related motion equitably among the parties.

(B) Self-Regulatory Organization's Statement on Burden on Competition

NASD does not believe that the proposed rule change will result in any burden on competition that is not necessary or appropriate in furtherance of the purposes of the Act, as amended.

(C) Self-Regulatory Organization's Statement on Comments on the Proposed Rule Change Received From Members, Participants, or Others

Written comments were neither solicited nor received.

III. Date of Effectiveness of the Proposed Rule Change and Timing for Commission Action

Within 35 days of the date of publication of this notice in the **Federal Register** or within such longer period (i) as the Commission may designate up to 90 days of such date if it finds such longer period to be appropriate and publishes its reasons for so finding or (ii) as to which the self-regulatory organization consents, the Commission will:

A. By order approve such proposed rule change, or

B. Institute proceedings to determine whether the proposed rule change should be disapproved.

IV. Solicitation of Comments

Interested persons are invited to submit written data, views and arguments concerning the foregoing, including whether the proposed rule change is consistent with the Act. Comments may be submitted by any of the following methods:

Electronic Comments

- Use the Commission's Internet comment form (*http://www.sec.gov/rules/sro.shtml*); or
- Send an e-mail to *rule-comments@sec.gov.* Please include File Number SR–NASD–2005–052 on the subject line.

Paper Comments

- Send paper comments in triplicate to Jonathan G. Katz, Secretary, Securities and Exchange Commission, 450 Fifth Street, NW., Washington, DC 20549–0609.

All submissions should refer to File Number SR–NASD–2005–052. This file number should be included on the subject line if e-mail is used. To help the Commission process and review your comments more efficiently, please use only one method. The Commission will post all comments on the Commission's Internet Web site (*http://www.sec.gov/rules/sro.shtml*). Copies of the submission, all subsequent amendments, all written statements with respect to the proposed rule change that are filed with the Commission, and all written communications relating to the proposed rule change between the Commission and any person, other than those that may be withheld from the public in accordance with the provisions of 5 U.S.C. 552, will be available for inspection and copying at the principal office of NASD. All comments received will be posted without change; the Commission does not edit personal identifying information from submissions. You should submit only information that you wish to make available publicly. All submissions should refer to the File Number SR–NASD–2005–052 and should be submitted on or before June 9, 2005.

For the Commission, by the Division of Market Regulation, pursuant to delegated authority.[7]

J. Lynn Taylor,

Assistant Secretary.

[FR Doc. E5–2506 Filed 5–18–05; 8:45 am]

BILLING CODE 8010–01–P

[7] 17 CFR 200.30–3(a)(12).

SECURITIES AND EXCHANGE COMMISSION

[Release No. 34–51691; File No. SR–CSE–2003–06]

Self-Regulatory Organizations; National Stock Exchange, Inc.; Order Approving Proposed Rule Change and Notice of Filing and Order Granting Accelerated Approval to Amendment No. 3 to the Proposed Rule Change Relating to Corporate Governance of Listed Issuers

May 12, 2005.

I. Introduction

On September 12, 2003, the Cincinnati Stock Exchange, now known as National Stock Exchange (''Exchange'' or ''NSX''), filed with the Securities and Exchange Commission (''Commission''), pursuant to section 19(b)(1) of the Securities Exchange Act of 1934 (''Act'')[1] and Rule 19b–4 thereunder,[2] a proposed rule change to amend Article IV of its By-Laws pertaining to its listing standards, including the addition of new corporate governance standards applicable to listed companies. Among other things, the Exchange also proposed to amend Article IV, Section 2 of the By-Laws, relating to unlisted trading privileges.

The proposed rule change was published for comment in the **Federal Register** on October 20, 2003.[3] The Commission received no comments on the proposal. On November 19, 2003, the Exchange submitted Amendment No. 1 to the proposed rule change. On November 21, 2003, the Exchange submitted Amendment No. 2 to the proposed rule change.

On November 25, 2003, the Commission partially approved the proposed rule change as amended by Amendment Nos. 1 and 2. The portion of the proposal that remained unapproved was the proposed change to Article IV, Section 2 of the By-Laws relating to unlisted trading privileges.[4]

On April 19, 2005, the Exchange filed Amendment No. 3 to the proposal, revising the proposed change to Article IV, Section 2. This Order approves this remaining portion of the proposed rule

[1] 5 U.S.C. 78s(b)(1).

[2] 17 CFR 240.19b–4.

[3] *Id.*

[4] Securities Exchange Act Release No. 48832 (November 25, 2003), 68 FR 67715 (December 3, 2003) (''Partial Approval Order''). In the Partial Approval Order, the Commission granted accelerated approval to Amendment No. 1, and solicited comments from interested persons on Amendment No. 1. The Commission received no comments on Amendment No. 1. Amendment No. 2 was a technical amendment that was not subject to notice and comment.

change by granting accelerated approval to Amendment No. 3, and solicits comments from interested persons on Amendment No. 3.

II. Description of the Proposal

Currently, Article IV, Section 2, of the Exchange's By-Laws provides that no application shall be made by the Exchange to the Commission for the extension of unlisted trading privileges with respect to any security unless the issuer of the security meets the requirements for listing on the Exchange that are set forth in Section 1.3 of Article IV. It further provides that in the event that an issuer whose security has been the subject of a grant of unlisted trading privileges to the Exchange ceases to meet the listing requirements of Section 1.3, the Exchange shall terminate such unlisted trading. An exception is provided that permits the Exchange to seek and continue unlisted trading privileges on any security for which the primary trading market is the New York Stock Exchange or the American Stock Exchange.

The proposed rule change, as amended by Amendment No. 3, would broaden the ability of the Exchange to extend unlisted trading privileges by revising Article IV, Section 2, simply to state: ''Notwithstanding the requirements for listing set forth in Section 1.3 of this Article IV, the Exchange may seek and continue unlisted trading privileges on any security *as to which unlisted trading privileges may be extended in accordance with Section 12(f) of the Act and the rules thereunder.''* [5]

III. Discussion

After careful review, the Commission finds that the proposed rule change, as amended, is consistent with the requirements of the Act and the rules and regulations thereunder applicable to a national securities exchange.[6] In particular, the Commission believes that the proposed rule change, as amended, is consistent with section 6(b)(5) and section 12(f) of the Act [7] in that it permits the Exchange to extend unlisted trading privileges to the extent permitted by section 12(f) and the rules thereunder.[8]

The Exchange has requested that the Commission grant accelerated approval to Amendment No. 3 to the proposed rule change. The Commission believes that Amendment No. 3 improves the text of the proposed rule change by revising it to mirror the terminology of the statute and to include a reference to the rules thereunder. Acceleration of the amendment will permit the Exhange to implement the proposed rule change without further delay. The Commission therefore finds good cause, consistent with Section 19(b)(2) of the Act,[9] to approve Amendment No. 3 to the proposed rule change prior to the thirtieth day after the date of publication of notice of filing thereof in the **Federal Register**.

IV. Solicitation of Comments

Interested persons are invited to submit written data, views, and arguments concerning Amendment No. 3, including whether the Amendment is consistent with the Act. Comments may be submitted by any of the following methods:

Electronic Comments

- Use the Commission's Internet comment form (*http://www.sec.gov/rules/sro.shtml*); or
- Send an e-mail to *rule-comments@sec.gov.* Please include File Number SR–CSE–2003–06 on the subject line.

Paper Comments

- Send paper comments in triplicate to Jonathan G. Katz, Secretary, Securities and Exchange Commission, 450 Fifth Street, NW., Washington, DC 20549–0609.

All submissions should refer to File Number SR–CSE–2003–06. This file number should be included on the subject line if e-mail is used. To help the Commission process and review your comments more efficiently, please use only one method. The Commission will post all comments on the Commission's Internet Web site (*http://www.sec.gov/rules/sro.shtml*). Copies of the submission, all subsequent amendments, all written statements with respect to the proposed rule change that are filed with the Commission, and all written communications relating to the proposed rule change between the Commission and any person, other than those that may be withheld from the public in accordance with the provisions of 5 U.S.C. 552, will be available for inspection and copying in the Commission's Public Reference Section, 450 Fifth Street, NW., Washington, DC 20549. Copies of such filing also will be available for inspection and copying at the principal office of the NSX. All comments received will be posted without change; the Commission does not edit personal identifying information from submissions. You should submit only information that you wish to make available publicly. All submissions should refer to File Number SR–CSE–2003–06 and should be submitted on or before June 9, 2005.

V. Conclusion

For the foregoing reasons, the Commission finds that the proposed rule change, as amended, is consistent with the Act and the rules and regulations thereunder applicable to a national securities exchange.

It is therefore ordered, pursuant to section 19(b)(2) of the Act,[10] that the remaining portion of the proposed rule change (SR–CSE–2003–06), as amended, be, and hereby is, approved, and that Amendment No. 3 to the proposed rule change be, and hereby is, approved on an accelerated basis.

For the Commission, by the Division of Market Regulation, pursuant to delegated authority.[11]

J. Lynn Taylor,

Assistant Secretary.

[FR Doc. E5–2503 Filed 5–18–05; 8:45 am]

BILLING CODE 8010–01–P

[5] The italicized text reflects Amendment No. 3 to the proposed rule change. The original proposal, as published in the Notice, used the phrase ''as to which unlisted trading privileges have been granted pursuant to section 12(f) of the Act.''

[6] 15 U.S.C. 78f(b). In approving this proposal, the Commission has considered the proposed rule's impact on efficiency, competition and capital formation. 15 U.S.C. 78c(f).

[7] 15 U.S.C. 78f(b)(5) and 15 U.S.C. 78*l*(f). Section 6(b)(5) requires that the rules of an exchange be designed, among other things, to facilitate transactions in securities, to prevent fraudulent and manipulative acts and practices, to promote just and equitable principles of trade, to remove impediments to and perfect the mechanism of a free and open market and a national market system, and, in general, to protect investors and the public interest, and not permit unfair discrimination among issuers. Section 12(f) sets forth the requirements in accordance with which a national securities exchange may extend unlisted trading privileges.

[8] In approving the proposed rule change, the Commission notes that, among other things, the extension of unlisted trading privileges is subject to Rule 12f–5, which prohibits a national securities exchange from extending unlisted trading privileges to a security unless the exchange has in effect a rule or rules providing for transactions in the class or type of security to which the exchange extends unlisted trading privileges. 17 CFR 240.12f–5.

[9] 15 U.S.C. 78s(b)(2).

[10] 15 U.S.C. 78s(b)(2).

[11] 17 CFR 200.30–3(a)(12).

SMALL BUSINESS ADMINISTRATION

Public Federal Regulatory Enforcement Fairness Hearing; Region V Small Business Regulatory Fairness Board

The U.S. Small Business Administration, Region V Small Business Regulatory Fairness Board and the SBA Office of the National

Ombudsman will hold a public hearing on Friday, June 3, 2005, at 8:30 a.m. The public hearing will be held at the Rock Valley College ''Woodward Technology Center, 3301 North Mulford Road, Room 117, Rockford, IL 61114, phone (815) 921–2081, to receive comments and testimony from small business owners, small government entities, and small non-profit organizations concerning regulatory enforcement and compliance actions taken by federal agencies.

Anyone wishing to attend or to make a presentation must contact Gary Peele, in writing or by fax, in order to be put on the agenda. Gary Peele, Supervisory Marketing Specialist, SBA Illinois District Office, 500 West Madison Street, Chicago, IL 60661, phone (312) 353–7353, fax (202) 481–2031, e-mail: *gary.peele@sba.gov.*

For more information, see our Web site at *http://www.sba.gov/ombudsman.*

Matthew K. Becker,

Committee Management Officer.

[FR Doc. 05–9972 Filed 5–18–05; 8:45 am]

BILLING CODE 8025–01–P

SMALL BUSINESS ADMINISTRATION

RIN: 3245–AF21

Small Business Innovation Research Program Policy Directive

AGENCY: U.S. Small Business Administration.

ACTION: Notice of proposed amendments to Policy Directive.

SUMMARY: This document proposes amendments to the Small Business Innovation Research (SBIR) Program Policy Directive. These proposed amendments reflect the requirements that the Executive Order, Encouraging Innovation in Manufacturing, imposes on the Small Business Administration (SBA) and the Federal agencies that participate in the SBIR program. This document also provides guidelines and directives to Federal agencies for the general conduct of the program as it relates to implementing the Executive Order.

DATES: Public comments on the proposed amendments to the SBIR Policy Directive must be received on or before June 20, 2005.

ADDRESSES: You may submit comments, identified by RIN 3245–AF21, by any of the following methods. (1) The Federal eRulemaking portal: *www.regulations.gov*; (2) e-mail at *technology@sba.gov* (include RIN in the subject line of the message); (3) mail, addressed to Edsel M. Brown, Jr., Assistant Administrator for Technology, Office of Technology, Office of Policy, Planning, and Liaison; Office of Government Contracting and Business Development, U.S. Small Business Administration, 409 3rd Street, SW., Washington, DC 20416.

FOR FURTHER INFORMATION CONTACT: Edsel M. Brown, Jr., Office of Technology, Office of Policy, Planning, and Liaison, Office of Government Contracting and Business Development, at (202) 205–6450 or at *technology@sba.gov*.

SUPPLEMENTARY INFORMATION: In 1982, Congress enacted the Small Business Innovation Development Act of 1982 (SBIDA), Public Law 97–219 (codified at 15 U.S.C. 638), which established the SBIR Program. The statutory purpose of the Small Business Innovation Research (SBIR) Program is to strengthen the role of innovative small business concerns (SBCs) in Federally-funded research and research and development (R/R&D).

The SBIR Program is a phased process, uniform throughout the Federal Government, of soliciting proposals and awarding funding agreements for R/R&D to meet stated agency needs or missions. To stimulate and foster scientific and technological innovation, including increasing commercialization of Federal R/R&D, the program must follow a uniform competitive process of three phases: Phase I, Phase II, and Phase III.

SBIDA requires the SBA to ''issue Policy Directives for the general conduct of the SBIR programs within the Federal Government.'' 15 U.S.C. 638(j)(1). SBA proposes to amend the most recent SBIR Policy Directive which was published on September 24, 2002, at 67 FR 60072–60098.

On February 24, 2004, the President signed Executive Order 13329, ''Encouraging Innovation in Manufacturing.'' The purpose of the Executive Order is to ensure that Federal Government agencies and departments properly and effectively assist the private sector in its manufacturing innovation efforts through the use of the SBIR and the Small Business Transfer Technology (STTR) Programs. Pursuant to the Executive Order, the SBA is required to:

(1) Establish, after consultation with the Director of the Office of Science and Technology Policy (OSTP), formats and schedules for submission of reports by the heads of departments and agencies; and (2) issue to departments and agencies guidelines and directives (in addition to the formats and schedules) as the SBA Administrator determines from time to time are necessary to implement the Executive Order, after such guidelines and directives are submitted to the President, through the Director of OSTP, and are approved by the President.

In addition, the Executive Order requires the heads of the agencies and departments with one or more SBIR or STTR programs to perform the following: (1) To the extent permitted by law and in a manner consistent with the mission of that department or agency, give high priority within such programs to manufacturing-related research and development to advance innovation in manufacturing through small business; and (2) to submit reports annually to the Administrator of the SBA and the Director of the OSTP concerning the efforts of such departments or agencies in implementing the Executive Order. SBA proposes to amend the SBIR Policy Directive in order to fulfill its responsibilities under Executive Order 13329 and to provide the guidelines and requirements that the participating agencies and departments need to implement the provisions of the Executive Order as set forth above.

Section-by-Section Analysis

Section 2 of the SBIR Policy Directive contains a summary of the legislative provisions applicable to the SBIR Program. SBA is proposing to amend this section to include an overview of the requirements imposed by Executive Order 13329 and to amend the section heading to more accurately reflect the scope of the section.

Section 3 of the SBIR Policy Directive sets forth definitions pertinent to the SBIR program. SBA proposes to add a definition for ''Manufacturing-related'' research and development. The definition was initially developed by the OSTP, the National Institute of Standards and Technology, and the National Science Foundation and was reviewed by the National Science and Technology Council. The definition encompasses research and development that improves existing methods or processes, including machine technologies, systems technologies, and environmental or societal technologies. In addition, to facilitate the proper placement of this new definition, it will be necessary to redesignate several paragraphs in section 3.

Section 4 of the Policy Directive includes a description of the structure and purpose of Phases I, II, and III of the SBIR Program and the standards for evaluating grant proposals. In section 4(a)(2) of the Policy Directive, SBA is proposing to add that agencies may, to the extent permitted by law, give additional consideration to manufacturing-related proposals.

Section 9 of the Policy Directive sets forth the responsibilities of the participating agencies and departments under the SBIR Program. In the amendments to the Policy Directive, SBA is proposing to add those responsibilities imposed by Executive Order 13329. Specifically, as amended, the SBIR Policy Directive will require agencies and departments to develop an Action Plan for the implementation of Executive Order 13329, identifying procedures used for giving priority to manufacturing-related R&D and provide information regarding Executive Order 13329 on their SBIR Web site. In addition, the SBA proposes deleting a dated reference to the National Critical Technologies panel.

Section 10 of the Policy Directive discusses the content, structure, and submission requirements for the report that each participating agency and department must submit to the SBA by March 15 of each year. SBA proposes to amend section 10(a) to make electronic reporting of agencies' annual report mandatory and amend section 10(b) to add the requirement for each agency and department to also report on its activities related to the implementation of Executive Order 13329. In addition, the SBA proposes deleting a dated reference to the National Critical Technology topic number.

Section 11 of the Policy Directive sets forth SBA's responsibilities with respect to the SBIR program. SBA proposes to amend this section to delete a dated reference to the National Critical Technology panel.

Finally, in order to clarify the reporting requirements, SBA proposes to reformat Appendix II, changing the description in some fields, and adding fields that were not previously listed. SBA proposes consolidating the file format to a single file and numbering all fifty-eight (58) fields required for reporting. SBA has identified those fields which are mandatory for all records, mandatory for STTR projects, and mandatory for Phase II projects. SBA also proposes renaming the field formerly named ''Minority'' as ''Socially and Economically Disadvantaged Small Business.'' As described in the most recent publication of the SBIR policy directive, the STTR reauthorization legislation, Public Law 107–50, requires collection of information on awardees' HUBZone certification. However, the requirement was omitted from the Appendix as a reporting field. To rectify this, SBA proposes adding ''HUBZone Certified'' as field 12.

Paperwork Reduction Act

SBA has determined that the proposed amendments to the SBIR Policy Directive, as a result of Executive Order 13329, do not impose additional reporting or recordkeeping requirements under the Paperwork Reduction Act, 44 U.S.C. Chapter 35.

Notice of Proposed Policy Directive; Small Business Innovation Research Program

To: The Directors, Small Business Innovation Research Program

Subject: Executive Order 13329, ''Encouraging Innovation in Manufacturing,'' Revisions to the Small Business Innovation Research Program Policy Directive.

1. *Purpose.* Section 9(j)(3) of the Small Business Act (15 U.S.C. 638(j)(3)) requires the U.S. Small Business Administration (SBA) Administrator to modify the Small Business Innovation Research (SBIR) Program Policy Directive as required for the general conduct of the SBIR Program within the Federal Government.

2. *Authority.* This proposed Policy Directive is issued under the authority of 15 U.S.C. 638(j).

3. *Procurement Regulations.* The Federal Acquisition Regulations may need to be modified to conform to the requirements of the Reauthorization and a final Policy Directive. Regulatory provisions that pertain to the areas of SBA responsibility will require approval of the SBA Administrator or designee. The Office of Technology, Office of Policy, Planning, and Liaison, Office Government Contracting/Business Development, SBA, is the appropriate office for coordinating such regulatory provisions.

4. *Personnel Concerned.* All Federal Government personnel who are involved in the administration of the program, including those involved with the issuance and management of funding agreements of the SBIR Program and the establishment of goals for small business concerns (SBCs) in research or research and development procurements or grants.

5. *Distribution.* Federal Government agencies and departments participating in the SBIR Program and those required to establish small business research development goals as directed by section 9 of the Small Business Act (15 U.S.C. 638(j)).

6. *Originator.* Office of Technology, Office of Policy, Planning, and Liaison, Office of Government Contracting and Business Development, SBA.

7. *Dates.* The SBIR Program is authorized through September 30, 2008. A final Policy Directive will be effective when issued as final in the **Federal Register**.

Authorized By: Allegra McCullough

Associate Deputy Administrator, Government Contracting/Business Development, U.S. Small Business Administration

For the reasons set forth in the preamble, SBA proposes to amend the SBIR Policy Directive as follows:

1. Revise the heading of § 2 to read as follows:

Relevant Legal Provisions

2. Amend § 2 by adding a new paragraph (g) to read as follows:

(g) Under Executive Order 13329, ''Encouraging Innovation in Manufacturing,'' Federal agencies have an important role in helping to advance innovation, including innovation in manufacturing, through small businesses. Agencies must give high priority to SBIR projects that are focused on manufacturing related R&D, in a manner consistent with the missions of the agencies and the purpose of the SBIR program. Participating agencies must report annually to the SBA Administrator and the Director of the Office of Science and Technology Policy on its efforts to carry out Executive Order 13329. The Executive Order directs the SBA to establish formats and schedules for this reporting and to issue guidelines and directives as necessary to implement the Executive Order.

3. Amend section 3 by redesignating paragraphs (s) through (gg) as (t) through (hh) and adding new paragraph (s) to read as follows:

(s) *Manufacturing-related.* Activities that relate to manufacturing processes, equipment and systems, or manufacturing workforce skills and protection including, unit process level technologies; machine level technologies; systems level technologies; and environmental or societal level technologies.

4. Amend section 4(a)(2) by adding the following after the second sentence:

The proposal evaluation process shall also, to the extent permitted by law and in a manner consistent with the mission of the agency and the purpose of the SBIR program, give consideration to manufacturing-related research.

5. Amend section 9(a)(2) by deleting ''(i) the National Critical Technologies panel (or its successor) in reports required under 42 U.S.C. 6683, or (ii).''

6. Amend section 9 to add paragraphs (g) and (h) to read as follows:

(g) To the extent permitted by the law, and in a manner consistent with the mission of that agency and the purpose of the SBIR program, each participating

agency must give priority in the SBIR program to manufacturing-related research and development, including the following:

(1) *Unit process level technologies* that create or improve manufacturing processes, including:

(i) Fundamental improvements in existing manufacturing processes that deliver substantial productivity, quality, or environmental benefits; or

(ii) Development of new manufacturing processes, including new materials, coatings, methods, and associated practices.

(2) Machine level technologies that create or improve manufacturing equipment, including:

(i) Improvements in capital equipment that create increased capability (such as accuracy or repeatability), increased capacity (through productivity improvements or cost reduction), or increased environmental efficiency (safety, energy efficiency, environmental impact); or

(ii) New apparatus and equipment for manufacturing, including additive and subtractive manufacturing, deformation and molding, assembly and test, semiconductor fabrication, biologics, biomaterials, vaccines or drug production, and nanotechnology.

(3) Systems level technologies for innovation in the manufacturing enterprise, including:

(i) Advances in controls, sensors, networks, and other information technologies which improve the quality and productivity of manufacturing cells, lines, systems, and facilities;

(ii) Innovation in extended enterprise functions critical to manufacturing, such as quality systems, resource management, supply change integration, and distribution, scheduling and tracking; or

(iii) Technologies that enable integrated and collaborative product and process development, including computer-aided and expert systems for design, tolerancing, process and materials selection, life-cycle cost estimation, rapid prototyping, and tooling.

(4) Environmental or societal level technologies that improve workforce abilities, productivity, and manufacturing competitiveness, including:

(i) Technologies for improved workforce health and safety, such as human factors and ergonomics; or

(ii) Technologies that aid and improve workforce manufacturing skill and technical excellence, such as educational systems incorporating improved manufacturing knowledge and instructional methods.

(h) Agencies must develop an Action Plan for implementing Executive Order 13329, which identifies activities used to give priority in the SBIR program to manufacturing-related research and development. These activities should include adding information on the Executive Order to the agency's SBIR program website.

7. Amend § 10(a) to read as follows:

(a) *Annual Report Due Date and Format.* Reporting must be on an annual basis and will be for the period ending September 30 of each fiscal year. The report must be submitted to SBA by March 15 of each year. For example, the report for FY 2005 (October 1, 2001–September 30, 2004) must be submitted to SBA by March 15, 2006. SBA encourages agencies to submit their annual report before the March 15 due date. The report must be submitted electronically to *technology@sba.gov*, and a single hard copy should be sent to the address noted in Section 5(b). The award information contained in the annual report must be validated and complete upon submission to SBA on March 15.

8. Amend § 10(b) by deleting paragraph 12 and redesignating paragraphs 13 and 14 as 12 and 13 and adding paragraph 14 to read as follows:

(14) Report on the specific activities undertaken to implement Executive Order 13329, including, for example, solicitation notices and new topics; additional proposal evaluation criteria or procedures; internet-based activities to promulgate the Executive Order, and any other activities in support of the Executive Order. The Report shall include a description of all significant alternatives considered to implement the Executive Order, detailing the factual, policy, and legal reasons for selecting the alternative(s) adopted and the factual, policy, and legal reasons for rejecting the other significant alternatives considered.

9. Amend § 11(a) by deleting ''the National Critical Technologies panel (or its successor) and''.

10. Amend Appendix II to read as follows:

TECH-NET DATA FIELDS FOR ALL AGENCY SBIR/STTR ANNUAL DATA SUBMISSIONS TO THE SBA

Field name	Required code	Type	Width	Description
1. Program Identification	MA	Numeric	1	SBIR/STTR Award Program Identifier (0=STTR; 1=SBIR).
2. Company	MA	Char	80	Company Name.
3. Company Division		Char	80	Company Division.
4. Street1	MA	Char	80	Street Address 1.
5. Street2		Char	80	Street Address 2.
6. City	MA	Char	40	City.
7. State	MA	Char	2	State.
8. Zip	MA	Numeric	5	Zip.
9. Zip4	MA	Numeric	4	Zip + 4.
10. Socially and Economically Disadvantaged Small Business.	MA	Numeric	1	Socially and Economically Disadvantaged Small Business indicator (Allowable values: 0 = yes; 1 = no).
11. Women	MA	Numeric	1	Women-owned company indicator (Allowable values: 0 = yes; 1 = no).
12. HUBZone Certified	MA	Numeric	1	HUBZone Certified Small Business Concern (Allowable values: 0 = yes; 1 = no).
13. Contact First	MA	Char	40	Company Official contact first name.
14. Contact Last	MA	Char	40	Contact last name.
15. Contact Middle Initial		Char	1	Contact middle initial (One character only—no periods or full names).
16. Contact Title		Char	40	Contact Official title.
17. Contact Phone	MA	Char	10	Contact Official phone (Ten characters only, for example 9999999999).

TECH-NET DATA FIELDS FOR ALL AGENCY SBIR/STTR ANNUAL DATA SUBMISSIONS TO THE SBA—Continued

Field name	Required code	Type	Width	Description
18. Contact Email Address	MA	Char	50	Contact email address.
19. Employees	MA	Numeric	5	Number of employees.
20. Agency	MA	Numeric	2	Awarding agency (see below).
21. Branch	MA	Number	1	Awarding DOD branch name (see below).
22. Phase 1 Award Year	MA	Numeric	4	Phase 1 Year.
23. Phase 1 Projected Total Amount	MA	Numeric	10	Phase 1 Projected Total Amount.
24. Phase 2 Award Year	M2	Numeric	4	Phase 2 Year (Phase 2 records only).
25. Phase 2 Projected Total Amount	M2	Numeric	10	Phase 2 Projected Total Amount (Phase 2 records only).
26. PI First	MA	Char	40	Principal Investigator First Name.
27. PI Last	MA	Char	40	Principal Investigator Last Name.
28. PI Middle Initial		Char	1	Principal Investigator middle initial (one character only—no periods or full names).
29. PI Title		Char	40	Principal Investigator Title.
30. PI Phone		Char	10	Principal Investigator phone (Ten characters only; for example 9999999999).
31. PI Email Address		Char	50	Principal Investigator email address.
32. Topic Code	MA	Char	15	Agency Solicitation Topic Number.
33. RI TYPE	MT	Numeric	1	Type of research institution (see below).
34. RI Name	MT	Char	80	Research institution (STTR only).
35. RI Street 1	MT	Char	80	Research institution address (STTR only).
36. RI Street 2		Char	80	Research institution address (STTR only).
37. RI City	MT	Char	40	Research institution city (STTR only).
38. RI State	MT	Char	2	Research institution State (STTR only).
39. RI Zip	MT	Numeric	5	Research institution Zip (STTR only).
40. RI Zip4		Numeric	4	Research institution Zip + 4.
41. RI Official First		Char	40	Research institution Official First Name.
42. RI Official Last		Char	40	Research institution Official Last Name.
43. RI Official Initial		Char	1	Research institution Official Middle Initial (One character only no periods or full names).
44. RI Official Phone		Char	10	Research institution Official's phone # (Ten characters only; for example, 9999999999).
45. Tracking Number	MA	Char	20	Agency key identifier (Internal number scheme).
46. TIN/EIN	MA	Char	10	Taxpayer/Employer Identification number Prefix with 1 for EIN; 2 for Social Security Number. This field must be exactly 10 digits in size and must be a valid EIN or TIN.
47. Contract/Grant Num	MA	Char	20	Agency Award.
48. Solicitation Number	MA	Char	20	Solicitation Number.
49. Solicitation Year	MA	Numeric	4	Year of the Solicitation.
50. Title	MA	Char	800	Title of research project.
51. Abstract	MA	Char	1500	Technical Abstract.
52. Results		Char	1000	Project anticipated results.
53. Comments		Char	1000	Project comments.
54. Project Initiator	MT	Char	1	Initiator of STTR collaborative effort (Allowable values: S = Small Business Concern; R = Research Institution) (STTR only).
55. Technology Used	MT	Char	1	SBC or RI originate any technology used in the STTR project (Allowable values: S = Small Business Concern; R = Research Institution) (STTR only).
56. Time to establish license agreement (months)	MT	Numeric	2	Time duration to establish any STTR license agreement (STTR only).
57. STTR Proceeds Distribution to SBC (%)	MT	Numeric	2	Allocation of proceeds from sale of STTR technology (STTR only).
58. STTR Proceeds Distribution to RI (%)	MT	Numeric	2	Allocation of proceeds from sale of STTR technology (STTR only).

Note: Required codes: Required fields are noted by:

MA Mandatory for ALL project
M2 Mandatory for Phase 2 projects
MT Mandatory for STTR projects
Optional field

Each agency must submit a file that contains all 58 fields for each record. Each agency must ensure that data submitted to the SBA includes all of the data fields above, even if the field is empty. For example, since DOD is the only agency using field #21 (Branch), other agencies must include a blank field 21 in their data submissions.

(Field 1) Program Identification Code
0 STTR
1 SBIR

(Field 20) Agency Code
1 DOD
2 DOE
3 NASA
4 HHS
5 NSF
6 DOT
7 EPA
8 (No longer used)
9 ED
10 USDA
11 DOC
12 (No longer used)
13 (No longer used)
14 DHS

15 HUD
(Field 21) Branch Code
1 AF
2 ARMY
3 MDA
4 DARP
5 DTRA
6 NAVY
7 OSD
8 SOCO
9 NGA
10 CBD

If any new codes should be added, please notify SBA's Office of Technology.

(FIELD 33) RESEARCH INSTITUTION TYPE

Code	Research institution types
1	Nonprofit college or university.
2	Domestic nonprofit research organization.
3	Federally Funded R&D Center (FFRDC).

The SBA will accept data in only the following formats:

- Tab delimited text files
- Microsoft Excel files
- Microsoft Access files

If you have any questions regarding TechNet Data submissions, please contact SBA's Office of Technology at (202) 205–6450 or *Technology@sba.gov.*

Michael McHale,

Acting Associate Deputy Administrator, Government Contracting/Business Development, U.S. Small Business Administration.

[FR Doc. 05–9973 Filed 5–18–05; 8:45 am]

BILLING CODE 8025–01–P

DEPARTMENT OF STATE

[Public Notice 5085]

Determination and Certification Under Section 40A of the Arms Export Control Act

Pursuant to section 40A of the Arms Export Control Act (22 U.S.C. 2781), and Executive Order 11958, as amended, I hereby determine and certify to the Congress that the following countries are not cooperating fully with United States antiterrorism efforts:

Cuba
Iran
Libya
North Korea
Syria

I hereby notify that the decision to retain Libya on the list of countries not fully cooperating with U.S. antiterrorism efforts comes in the context of an on-going and comprehensive review of Libya's record of support for terrorism. Although this process is not complete, Libya has taken significant steps to repudiate its past support for terrorism. When our review of Libya's overall record is complete, we will be pleased to consult with the Congress further.

This determination and certification shall be transmitted to the Congress and published in the **Federal Register**.

Dated: May 13, 2005.

Condoleezza Rice,

Secretary of State, Department of State.

[FR Doc. 05–10018 Filed 5–18–05; 8:45 am]

BILLING CODE 4710–10–P

TENNESSEE VALLEY AUTHORITY

Paperwork Reduction Act of 1995, as Amended by Public Law 104–13; Submission for OMB Review; Comment Request

AGENCY: Tennessee Valley Authority.

ACTION: Submission for OMB Review; comment request.

SUMMARY: The proposed information collection described below will be submitted to the Office of Management and Budget (OMB) for review, as required by the Paperwork Reduction Act of 1995 (44 U.S.C. Chapter 35, as amended). The Tennessee Valley Authority is soliciting public comments on this proposed collection as provided by 5 CFR 1320.8(d)(1). Requests for information, including copies of the information collection proposed and supporting documentation, should be directed to the Agency Clearance Officer: Alice D. Witt, Tennessee Valley Authority, 1101 Market Street (EB 5B), Chattanooga, Tennessee 37402–2801; (423) 751–6832. (SC: 001DCCB)

Comments should be sent to the OMB Office of Information and Regulatory Affairs, Attention: Desk Officer for the Tennessee Valley Authority June 20, 2005.

SUPPLEMENTARY INFORMATION:

Type of Request: Regular submission.

Title of Information Collection: Reservoir Operations Study (ROS)—Recreation User Data.

Frequency of Use: Annually for a period of five years.

Type of Affected Public: Individual recreation users at public and commercial recreation areas and recreation users from private water front homes.

Small Businesses or Organizations Affected: No.

Estimated Number of Annual Responses: 3,000.

Estimated Total Annual Burden Hours: 900.

Estimated Average Burden Hours Per Response: 0.33 hours.

Need For and Use of Information: As part of system wide re-evaluation of TVA reservoirs and tailwaters, TVA conducted a survey of recreation use on 13 representative reservoirs and 6 representative tailwaters during calendar year 2002. Recreation use estimates were made for public use areas, commercial marinas, river outfitters, and private home owners. In each case, information was collected on the amount of recreation use, length of stay, facility preference, trip origin, expenditures and economic impact.

These data now form the foundation for a TVA reservoir and tailwater recreation database—the first system-wide estimates on recreation use in the Valley collected since 1978. TVA recognizes the value of this database and proposes to keep it up-to-date and, improving its utility by refining the survey design and conducting additional surveys of recreational use on representative reservoirs and tailwaters.

Paula C. Cooper, Manager,

Systems Engineering, Enterprise Operations, Information Services.

[FR Doc. 05–9984 Filed 5–18–05; 8:45 am]

BILLING CODE 8120–08–P

DEPARTMENT OF TRANSPORTATION

Surface Transportation Board

Agency Information Collection Activities: Proposed Collections; Comment Request

AGENCY: Surface Transportation Board.

ACTION: 60-day notice and request for comments.

SUMMARY: The Surface Transportation Board (Board), as part of its continuing effort to reduce paperwork burdens, and as required by the Paperwork Reduction Act of 1995, 44 U.S.C. 3501 *et seq.* (PRA), gives notice that the Board proposes to request approval of the seven existing information collections described below. Office of Management and Budget (OMB) control numbers were obtained in the past, but have expired, for six of the seven information collections that are the subject of this notice. For the most part, the collections listed below continue current Board reporting requirements without revision. As described below, a minor revision has been made to Collection No. 1, Class I Railroad Annual Report. Comments are requested regarding any of the collections of information described below concerning (1) whether the particular collection of information

is necessary for the proper performance of the functions of the Board, including whether the collection has practical utility; (2) the accuracy of the Board's burden estimates; (3) ways to enhance the quality, utility, and clarity of the information collected; and (4) ways to minimize the burden of the collection of information on the respondents, including the use of automated collection techniques or other forms of information technology, when appropriate. Submitted comments will be summarized and included in the Board's request for OMB approval.

DATES: Written comments are due on July 18, 2005.

ADDRESSES: Written comments should be identified as ''STB Docket No. CU 66, First Notice Regarding Seven Information Collections,'' refer to the title of the specific collection(s) commented upon, and either be sent to: Surface Transportation Board, 1925 K Street, NW., Washington, DC 20423–0001, or filed on the Board's Web site at *http://www.stb.dot.gov* by clicking on E-FILING, and then ''Other Submissions.''.

FOR FURTHER INFORMATION CONTACT: For additional information or copies of the information collection(s) contact Scott Decker, (202) 565–1531. [Federal Information Relay Service (FIRS) for the hearing impaired: (800) 877–8339.]

Subjects: In this notice the Board is requesting comments on the following information collections:

Collection Number 1

Title: Class I Railroad Annual Report.

OMB Control Number: 2140–0009.

Form Number: R1.

Type of Review: Reinstatement, with change, of a previously approved collection for which OMB control number has expired.

Respondents: Class I railroads.

Number of Respondents: Fewer than 10.

Revision: Schedule 755 of the Surface Transportation Board's Class I Railroad Annual Report (ACAA–R1) is being modified to include reporting of TOFC/COFC intermodal load factors. The new item is required to support the more accurate calculation of intermodal shipment costs. These cost estimates are used by the Surface Transportation Board when making determinations of market dominance in rail rate proceedings and when evaluating evidence submitted by parties in those proceedings. See 49 U.S.C. 10707. The collection of this information is authorized by section 11145 of the ICC Termination Act of 1995, Public Law 104–88, 109 Stat. 803 (1995), and codified at 49 U.S.C. 11145.

Estimated Time Per Response: 800 hours, based on information provided by the railroad industry during the 1990's. This estimate includes time spent reviewing instructions; searching existing data sources; gathering and maintaining the data needed; completing and reviewing the collection of information; and converting the data from the carrier's individual accounting system to the Board's Uniform System of Accounts (USOA), which ensures that the information will be presented in a consistent format across all reporting railroads, see 49 U.S.C. 11141–43, 11161–64, 49 CFR 1200–1201. It is possible that the time required to produce this report is overstated, given the advances made in computerized data collection and processing systems.

Frequency of Response: Annual.

Total Annual Hour Burden: 5,600 hours annually.

Total Annual ''Non-Hour Burden'' Cost: No ''non-hour cost'' burdens associated with this collection have been identified.

Needs and Uses: Annual reports are required to be filed by Class I railroads under 49 U.S.C. 11145. The reports show operating expenses and operating statistics of the carriers. Operating expenses include costs for right-of-way and structures, equipment, train and yard operations, and general and administrative expenses. Operating statistics include such items as car-miles, revenue ton-miles, and gross ton-miles. The reports are used by the Board, other Federal agencies, and industry groups to monitor and assess railroad industry growth, financial stability, traffic, and operations, and to identify industry changes that may affect national transportation policy. Information from this report is also entered into the Board's Uniform Rail Costing System (URCS), which is a cost measurement methodology. URCS, which was developed by the Board pursuant to 49 U.S.C. 11161, is used as a tool in rail rate proceedings, in accordance with 49 U.S.C. 10707(d), to calculate the variable costs associated with providing a particular service. The Board also uses this information to more effectively carry out other of its regulatory responsibilities, including: Acting on railroad requests for authority to engage in Board-regulated financial transactions such as mergers, acquisitions of control, and consolidations, see 49 U.S.C. 11323–11324; analyzing the information that the Board obtains through the annual railroad industry waybill sample, see 49 CFR 1244; measuring off-branch costs in railroad abandonment proceedings, in accordance with 49 CFR 1152.32(n); developing rail cost adjustment factors, in accordance with 49 U.S.C. 10708; and conducting investigations and rulemakings.

Information from certain schedules contained in these reports is compiled and published on the Board's Web site, *http://www.stb.dot.gov*. Information in these reports is not available from any other source.

Collection Number 2

Title: Quarterly Report of Revenues, Expenses, and Income—Railroads (Form RE&I).

OMB Control Number: 2140–____ (prior number under the Interstate Commerce Commission (ICC): 3120–0027).

Form Number: None.

Type of Review: Reinstatement, without change, of a previously approved collection for which OMB control number has expired.

Respondents: Class I railroads.

Number of Respondents: Fewer than 10.

Estimated Time Per Response: 6 hours.

Frequency of Response: Quarterly.

Total Annual Hour Burden: 168 hours annually.

Total Annual ''Non Hour Burden'' Cost: No ''non-hour cost'' burdens associated with this collection have been identified.

Needs and Uses: This collection is a report of railroad operating revenues, operating expenses and income items; it is a profit and loss statement, disclosing net railway operating income on a quarterly and year-to-date basis for the current and prior years. See 49 CFR 1243.1. The Board uses the information in this report to ensure competitive, efficient, and safe transportation through general oversight programs that monitor and forecast the financial and operating condition of railroads, and through regulation of railroad rate and service issues and rail restructuring proposals, including railroad mergers, consolidations, acquisitions of control, and abandonments. Information from these reports is used by the Board, other Federal agencies, and industry groups to monitor and assess industry growth and operations, detect changes in carrier financial stability, and identify trends that may affect the national transportation system. Information from these reports is compiled by the Board and published on its *http://www.stb.dot.gov*. The information contained in these reports is not available from any other source.

Collection Number 3

Title: Quarterly Condensed Balance Sheet—Railroads (Form CBS).

OMB Control Number: 2140–____ (prior number under ICC: 3120–0063).

Form Number: None.

Type of Review: Reinstatement, without change, of a previously approved collection for which OMB control number has expired.

Respondents: Class I railroads.

Number of Respondents: Fewer than 10.

Estimated Time Per Response: 6 hours.

Frequency of Response: Quarterly.

Total Annual Hour Burden: 168 hours annually.

Total Annual ''Non-Hour Burden'' Cost: No ''non-hour cost'' burdens associated with this collection have been identified.

Needs and Uses: This collection shows the balance, quarterly and cumulative for the current and prior year, of the carrier's assets and liabilities, gross capital expenditures, and revenue tons carried. See 49 CFR 1243.2. The Board uses the information in this report to ensure competitive, efficient, and safe transportation through general oversight programs that monitor and forecast the financial and operating condition of railroads, and through specific regulation of railroad rate and service issues and rail restructuring proposals, including railroad mergers, consolidations, acquisitions of control, and abandonments. Information from these reports is used by the Board, other Federal agencies and industry groups to assess industry growth and operations, detect changes in carrier financial stability, and identify trends that may affect the national transportation system. Information from these reports is compiled by the Board and published on its Web site, *http://www.stb.dot.gov*. The information contained in these reports is not available from any other source.

Collection Number 4

OMB Control Number: 2140____(prior number under ICC: 3120–0074).

Title: Report of Railroad Employees, Service and Compensation (Wage Forms A and B.)

Form Number: None.

Type of Review: Reinstatement, without change, of a previously approved collection for which OMB control number has expired.

Respondents: Class I railroads.

Number of Respondents: Fewer than 10.

Estimated Time Per Response: 107 hours, based on information provided by the railroad industry during the 1990's. It is possible that the time required to collect this information is overstated given the advances made in computerized data collection and processing systems.

Frequency of Response: Quarterly, with an annual summation.

Total Annual Hour Burden: 2996 hours annually.

Total Annual ''Non-Hour Burden'' Cost: No ''non-hour cost'' burdens associated with this collection have been identified.

Needs and Uses: This collection shows the number of employees, service hours, and compensation, by employee group (e.g., executive, professional, maintenance-of-way and equipment, and transportation), of the reporting railroads. See 49 CFR 1245. The information is used by the Board to forecast labor costs and measure the efficiency of the reporting railroads. The information is also used by the Board to evaluate proposed regulated transactions that may impact rail employees, including mergers and consolidations, acquisitions of control, purchases, and abandonments. Other Federal agencies and industry groups, including the Railroad Retirement Board, Bureau of Labor Statistics, and Association of American Railroads, use the information contained in the reports to monitor railroad operations. Certain information from these reports is compiled and published on the Board's Web site, *http://www.stb.dot.gov.* The information contained in these reports is not available from any other source.

Collection Number 5

Title: Monthly Report of Number of Employees of Class I Railroads (Wage Form C).

OMB Control Number: 2140–____ (prior number under ICC: 3120–0133).

Form Number: STB Form 350.

Type of Review: Reinstatement, without change, of a previously approved collection for which OMB control number has expired.

Respondents: Class I railroads.

Number of Respondents: Fewer than 10.

Estimated Time Per Response: 1.25 hours.

Frequency of Response: Monthly.

Total Annual Hour Burden: 101.50 hours annually.

Total Annual ''Non-Hour Burden'' Cost: No ''non-hour cost'' burdens associated with this collection have been identified.

Needs and Uses: This collection shows, for each reporting carrier, the average number of employees at mid-month in the six job classification groups that encompass all railroad employees. See 49 CFR 1246. The information is used by the Board to forecast labor costs and measure the efficiency of the reporting railroads. The information is also used by the Board to evaluate the impact on rail employees of proposed regulated transactions, including mergers and consolidations, acquisitions of control, purchases, and abandonments. Other Federal agencies and industry groups, including the Railroad Retirement Board, Bureau of Labor Statistics, and Association of American Railroads, use the information contained in these reports to monitor railroad operations. Certain information from these reports is compiled and published on the Board's Web site, *http://www.stb.dot.gov.* The information contained in these reports is not available from any other source.

Collection Number 6

Title: Annual Report of Cars Loaded and Cars Terminated.

OMB Control Number: 2140–____.

Form Number: Form STB–54.

Type of Review: Existing collection in use without an OMB control number.

Respondents: Class I railroads.

Number of Respondents: Fewer than 10.

Estimated Time Per Response: 4 hours.

Frequency of Response: Annual.

Total Annual Hour Burden: 28 hours annually.

Total Annual ''Non Hour Burden'' Cost: No ''non-hour cost'' burdens associated with this collection have been identified.

Needs and Uses: This collection reports the number of cars loaded and cars terminated on the reporting carrier's line. See 49 CFR 1247. Information in this report is entered into the Board's URCS, the uses of which are explained under Collection Number 1. This collection was authorized in *Modification of Class I Reporting Regulations,* STB Ex Parte No. 583 (STB served Jan. 5, 2001); 66 Fed. Reg. 1051–01 (2001). There is no other source for the information contained in this report.

Collection Number 7

OMB Control Number: 2140–0001.

Title: Quarterly Report of Freight Commodity Statistics (Form QCS).

Form Number: None.

Type of Review: Reinstatement, without change, of a previously approved collection for which OMB control number has expired.

Respondents: Class I railroads.

Number of Respondents: Fewer than 10.

Estimated Time Per Response: 217 hours.

Frequency of Response: Quarterly, with an annual summation.

Total Annual Hour Burden: Less than 6,076 hours annually.

Total Annual ''Non-Hour Burden'' Cost: No ''non-hour cost'' burdens associated with this collection have been identified.

Needs and Uses: This collection, which is based on information contained in waybills used by railroads in the ordinary course of business, reports car loadings and total revenues by commodity code for each commodity that moved on the railroad during the reporting period. See 49 CFR 1248. Information in this report is entered into the Board's URCS, the uses of which are explained under Collection Number 1. There is no other source for the information contained in this report.

SUPPLEMENTARY INFORMATION: Under the PRA, a Federal agency conducting or sponsoring a collection of information must display a currently valid OMB control number. Collection of information, which is defined in 44 U.S.C. 3502(3) and 5 CFR 1320.3(c), includes agency requirements that persons submit reports, keep records, or provide information to the agency, third parties, or the public. Under section 3506(c)(2)(A) of the PRA, Federal agencies are required to provide a 60-day notice and comment period through publication in the **Federal Register** concerning each proposed collection of information, including each proposed extension of an existing collection of information, before submitting the collection to OMB for approval.

Dated: May 13, 2005.

Vernon A. Williams,

Secretary.

[FR Doc. 05–9992 Filed 5–18–05; 8:45 am]

BILLING CODE 4915–01–P

DEPARTMENT OF TRANSPORTATION

Surface Transportation Board

Release of Waybill Data

The Surface Transportation Board has received a request from Thompson Hine and McCarthy, Sweeney & Harkaway on behalf of the State of North Dakota (WB456–1–5/11/2005) for continued access to certain data from the Board's 2001 and 2002 Carload Waybill Samples. A copy of the requests may be obtained from the Office of Economics, Environmental Analysis, and Administration.

The waybill sample contains confidential railroad and shipper data; therefore, if any parties object to these requests, they should file their objections with the Director of the Board's Office of Economics, Environmental Analysis, and Administration within 14 calendar days of the date of this notice. The rules for release of waybill data are codified at 49 CFR 1244.9.

Contact: Mac Frampton, (202) 565–1541.

Vernon A. Williams,

Secretary.

[FR Doc. 05–9913 Filed 5–18–05; 8:45 am]

BILLING CODE 4915–01–P

DEPARTMENT OF TRANSPORTATION

Surface Transportation Board

[STB Finance Docket No. 34701]

CSX Transportation, Inc.—Trackage Rights Exemption—Illinois Central Railroad Company

Pursuant to a written trackage rights agreement dated April 22, 2005, Illinois Central Railroad Company, a wholly owned subsidiary of Canadian National Railway Company (collectively, CN), has agreed to grant overhead trackage rights to CSX Transportation, Inc. (CSXT) over a line of railroad extending from (1) CN's Aulon Interlocking, milepost 390 on the Fulton Subdivision to milepost 11.00 on the Yazoo Subdivision, approximately 200 feet past the south leg of the wye switch into the Memphis Intermodal Terminal (Memphis Facility), in Frank C. Pidgeon Industrial Park, including CN's yard lead and yard tracks required to access the Memphis Facility, a distance of approximately 12 miles; and (2) CN's milepost 8.7 located on the track known as the old Birmingham Steel lead (owned by the Shelby County Port Authority and operated by CN) continuing westward to and beyond the new turnout to the Memphis Facility, a distance of approximately one thousand (1000) feet, all in the State of Tennessee.

The parties state that consummation of the transaction was scheduled to occur on May 10, 2005.

The purpose of the trackage rights is to allow CSXT and its affiliate, CSX Intermodal, to achieve operating efficiencies and to improve customer rail service by the movement of intermodal traffic between the Aulon Interlocking and the Memphis Facility.

As a condition to this exemption, any employees affected by the trackage rights will be protected by the conditions imposed in *Norfolk and Western Ry. Co.—Trackage Rights—BN,* 354 I.C.C. 605 (1978), as modified in *Mendocino Coast Ry., Inc.—Lease and Operate,* 360 I.C.C. 653 (1980).

This notice is filed under 49 CFR 1180.2(d)(7). If the notice contains false or misleading information, the exemption is void *ab initio.* Petitions to revoke the exemption under 49 U.S.C. 10502(d) may be filed at any time. The filing of a petition to revoke will not automatically stay the exemption.

An original and 10 copies of all pleadings, referring to STB Finance Docket No. 34701, must be filed with the Surface Transportation Board, 1925 K Street, NW., Washington, DC 20423–0001. In addition, a copy of each pleading must be served on J. Michael Cavanaugh, Holland & Knight, 2099 Pennsylvania Ave., NW., Suite 100, Washington, DC 20006.

Board decisions and notices are available on our Web site at *http://www.stb.dot.gov.*

Decided: May 10, 2005.

By the Board, David M. Konschnik, Director, Office of Proceedings.

Vernon A. Williams,

Secretary.

[FR Doc. 05–9788 Filed 5–18–05; 8:45 am]

BILLING CODE 4915–01–P

DEPARTMENT OF THE TREASURY

Alcohol and Tobacco Tax and Trade Bureau

Proposed Information Collection; Comment Request

AGENCY: Alcohol and Tobacco Tax and Trade Bureau (TTB), Treasury.

ACTION: Notice and request for comments.

SUMMARY: As part of our continuing effort to reduce paperwork and respondent burden, and as required by the Paperwork Reduction Act of 1995, we invite comments on the proposed or continuing information collections listed below in this notice.

DATES: We must receive your written comments on or before July 18, 2005.

ADDRESSES: You may send comments to Mary A. Wood, Alcohol and Tobacco Tax and Trade Bureau, at any of these addresses:

- P.O. Box 14412, Washington, DC 20044–4412;
- 202–927–8525 (facsimile); or
- *formcomments@ttb.gov* (e-mail).

Please send separate comments for each specific information collection listed below. You must reference the information collection's title, form or recordkeeping requirement number, and OMB number (if any) in your comment.

If you submit your comment via facsimile, send no more than five 8.5 × 11 inch pages in order to ensure electronic access to our equipment.

FOR FURTHER INFORMATION CONTACT: To obtain additional information, copies of the information collection and its instructions, or copies of any comments received, contact Mary A. Wood, Alcohol and Tobacco Tax and Trade Bureau, P.O. Box 14412, Washington, DC 20044–4412; or telephone 202–927–8210.

SUPPLEMENTARY INFORMATION:

Request for Comments

The Department of the Treasury and its Alcohol and Tobacco Tax and Trade Bureau, as part of their continuing effort to reduce paperwork and respondent burden, invite the general public and other Federal agencies to comment on the proposed or continuing information collections listed below in this notice, as required by the Paperwork Reduction Act of 1995 (44 U.S.C. 3501 *et seq.*).

Comments submitted in response to this notice will be included or summarized in our request for Office of Management and Budget (OMB) approval of the relevant information collection. All comments are part of the public record and subject to disclosure. Please not do include any confidential or inappropriate material in your comments.

We invite comments on: (a) Whether this information collection is necessary for the proper performance of the agency's functions, including whether the information has practical utility; (b) the accuracy of the agency's estimate of the information collection's burden; (c) ways to enhance the quality, utility, and clarity of the information collected; (d) ways to minimize the information collection's burden on respondents, including through the use of automated collection techniques or other forms of information technology; and (e) estimates of capital or start-up costs and costs of operation, maintenance, and purchase of services to provide the requested information.

Information Collections Open for Comment

Currently, we are seeking comments on the following recordkeeping requirement and certification:

Title: Marks on Wine Containers.

OMB Number: 1513–0092.

TTB Recordkeeping Requirement Number: 5120/3.

Abstract: TTB requires that wine on wine premises be identified by statements of information on labels or contained in marks. TTB uses this information to validate the receipts of excise tax revenue by the Federal government. The record retention period is only required as long as the container is used for storing wine.

Current Actions: There are no changes to this information collection and it is being submitted for extension purposes only.

Type of Review: Extension.

Affected Public: Business or other for-profit.

Estimated Number of Respondents: 1,560.

Estimated Total Annual Burden Hours: One (1).

Title: Certification of Proper Cellar Treatment for Imported Natural Wine.

OMB Number: 1513–0119.

TTB Form or Record Number: None.

Abstract: TTB is requiring importers of natural wine to certify compliance with proper cellar treatment standards. This certification is necessary to comply with statutory requirements.

Current Actions: There are no changes to this information collection and it is being submitted for extension purposes only.

Type of Review: Extension.

Affected Public: Business or other for-profit.

Estimated Number of Respondents: 4,000.

Estimated Total Annual Burden Hours: 5,000.

Dated: May 16, 2005.

William H. Foster,

Chief, Regulations and Procedures Division.

[FR Doc. 05–10005 Filed 5–18–05; 8:45 am]

BILLING CODE 4810–31–P

DEPARTMENT OF THE TREASURY

Internal Revenue Service

Proposed Collection; Comment Request for Form 8896

AGENCY: Internal Revenue Service (IRS), Treasury.

ACTION: Notice and request for comments.

SUMMARY: The Department of the Treasury, as part of its continuing effort to reduce paperwork and respondent burden, invites the general public and other Federal agencies to take this opportunity to comment on proposed and/or continuing information collections, as required by the Paperwork Reduction Act of 1995, Public Law 104–13 (44 U.S.C. 3506(c)(2)(A)). Currently, the IRS is soliciting comments concerning Form 8896, Low Sulfur Diesel Fuel Production Credit.

DATES: Written comments should be received on or before July 18, 2005 to be assured of consideration.

ADDRESSES: Direct all written comments to Glenn Kirkland Internal Revenue Service, room 6512, 1111 Constitution Avenue, NW., Washington, DC 20224.

FOR FURTHER INFORMATION CONTACT: Requests for additional information or copies of the form and instructions should be directed to Larnice Mack at Internal Revenue Service, room 6512, 1111 Constitution Avenue, NW., Washington, DC 20224, or at (202) 622–3179, or through the Internet at (*Larnice.Mack@irs.gov*).

SUPPLEMENTARY INFORMATION:

Title: Low Sulfur Diesel Fuel Production Credit.

OMB Number: 1545–1914.

Form Number: 8896.

Abstract: IRC section 45H allows small business refiners to claim a credit for the production of low sulfur diesel fuel. The American Jobs Creation Act of 2004 section 399 brought it into existence. Form 8896 will allow taxpayers to use a standardized format to claim this credit.

Current Actions: There are no changes being made to the form at this time.

Type of Review: Extension of a currently approved collection.

Affected Public: Business or other for-profit organizations.

Estimated Number of Respondents: 100.

Estimated Time Per Respondent: 9 hours, 5 minutes.

Estimated Total Annual Burden Hours: 980.

The following paragraph applies to all of the collections of information covered by this notice:

An agency may not conduct or sponsor, and a person is not required to respond to, a collection of information unless the collection of information displays a valid OMB control number. Books or records relating to a collection of information must be retained as long as their contents may become material in the administration of any internal revenue law. Generally, tax returns and tax return information are confidential, as required by 26 U.S.C. 6103.

Request For Comments: Comments submitted in response to this notice will be summarized and/or included in the request for OMB approval. All comments will become a matter of public record.

Comments are invited on: (a) Whether the collection of information is necessary for the proper performance of the functions of the agency, including whether the information shall have practical utility; (b) the accuracy of the

agency's estimate of the burden of the collection of information; (c) ways to enhance the quality, utility, and clarity of the information to be collected; (d) ways to minimize the burden of the collection of information on respondents, including through the use of automated collection techniques or other forms of information technology; and (e) estimates of capital or start-up costs and costs of operation, maintenance, and purchase of services to provide information.

Approved: May 12, 2005.

Glenn Kirkland,

IRS Reports Clearance Officer.

[FR Doc. E5–2493 Filed 5–18–05; 8:45 am]

BILLING CODE 4830–01–P

DEPARTMENT OF THE TREASURY

Internal Revenue Service

Proposed Collection; Comment Request for Form 8814

AGENCY: Internal Revenue Service (IRS), Treasury.

ACTION: Notice and request for comments.

SUMMARY: The Department of the Treasury, as part of its continuing effort to reduce paperwork and respondent burden, invites the general public and other Federal agencies to take this opportunity to comment on proposed and/or continuing information collections, as required by the Paperwork Reduction Act of 1995, Public Law 104–13 (44 U.S.C. 3506(c)(2)(A)). Currently, the IRS is soliciting comments concerning Form 8814, Parents' Election To Report Child's Interest and Dividends.

DATES: Written comments should be received on or before July 18, 2005 to be assured of consideration.

ADDRESSES: Direct all written comments to Glenn P. Kirkland, Internal Revenue Service, Room 6516, 1111 Constitution Avenue NW., Washington, DC 20224.

FOR FURTHER INFORMATION CONTACT: Requests for additional information or copies of the form and instructions should be directed to R. Joseph Durbala, (202) 622–3634, Internal Revenue Service, Room 6516, 1111 Constitution Avenue NW., Washington, DC 20224, or through the internet at *RJoseph.Durbala@irs.gov.*

SUPPLEMENTARY INFORMATION:

Title: Parents' Election To Report Child's Interest and Dividends.

OMB Number: 1545–1128.

Form Number: 8814.

Abstract: Form 8814 is used by parents who elect to report the interest and dividend income of their child under age 14 on their own tax return. If this election is made, the child is not required to file a return.

Current Actions: There are no changes being made to Form 8814 at this time.

Type of Review: Extension of a currently approved collection.

Affected Public: Individuals or households.

Estimated Number of Respondents: 1,100,000.

Estimated Time Per Respondent: 1 hr., 46 min.

Estimated Total Annual Burden Hours: 1,470,467.

The following paragraph applies to all of the collections of information covered by this notice:

An agency may not conduct or sponsor, and a person is not required to respond to, a collection of information unless the collection of information displays a valid OMB control number. Books or records relating to a collection of information must be retained as long as their contents may become material in the administration of any internal revenue law. Generally, tax returns and tax return information are confidential, as required by 26 U.S.C. 6103.

Request For Comments: Comments submitted in response to this notice will be summarized and/or included in the request for OMB approval. All comments will become a matter of public record. Comments are invited on: (a) Whether the collection of information is necessary for the proper performance of the functions of the agency, including whether the information shall have practical utility; (b) the accuracy of the agency's estimate of the burden of the collection of information; (c) ways to enhance the quality, utility, and clarity of the information to be collected; (d) ways to minimize the burden of the collection of information on respondents, including through the use of automated collection techniques or other forms of information technology; and (e) estimates of capital or start-up costs and costs of operation, maintenance, and purchase of services to provide information.

Approved: May 11, 2005.

Glenn P. Kirkland,

IRS Reports Clearance Officer.

[FR Doc. E5–2494 Filed 5–18–05; 8:45 am]

BILLING CODE 4830–01–P

DEPARTMENT OF THE TREASURY

Internal Revenue Service

Proposed Collection; Comment Request for Revenue Procedure 2005–24

AGENCY: Internal Revenue Service (IRS), Treasury.

ACTION: Notice and request for comments.

SUMMARY: The Department of the Treasury, as part of its continuing effort to reduce paperwork and respondent burden, invites the general public and other Federal agencies to take this opportunity to comment on proposed and/or continuing information collections, as required by the Paperwork Reduction Act of 1995, Public Law 104–13 (44 U.S.C. 3506(c)(2)(A)). Currently, the IRS is soliciting comments concerning Revenue Procedure 2005–24, Waiver of Spousal Election.

DATES: Written comments should be received on or before July 18, 2005 to be assured of consideration.

ADDRESSES: Direct all written comments to Glenn P. Kirkland, Internal Revenue Service, room 6516, 1111 Constitution Avenue NW., Washington, DC 20224.

FOR FURTHER INFORMATION CONTACT: Requests for additional information or copies of the revenue procedure should be directed to R. Joseph Durbala at Internal Revenue Service, room 6516, 1111 Constitution Avenue NW., Washington, DC 20224, or at (202) 622–3945, or through the internet at *RJoseph.Durbala@irs.gov.*

SUPPLEMENTARY INFORMATION:

Title: Waiver of Spousal Election.

OMB Number: 1545–1936.

Revenue Procedure Number: Revenue Procedure 2005–24.

Abstract: Revenue Procedure 2005–24 provides notice to a husband or wife who has an interest in a Charitable Remainder Annuity Trust (CRAT) under section 664(d)(1) of the Internal Revenue Code or Charitable Remainder Unitrust (CRUT) under section 664(d)(2) that was created by his or her spouse where, under applicable state law, such spouse has a right to receive an elective share that could be satisfied with assets of the CRAT or CRUT. In cases where such a CRAT or CRUT is established after the date that is ninety days after the date this revenue procedure is published in the IRB, the husband or wife must waive the right to receive the elective share in order for the CRAT or CRUT to continue to qualify under section 664(d)(1)(b) or (d)(2)(B).

Current Actions: There are no changes being made to the revenue procedure at this time.

Type of Review: Extension of a currently approved collection.

Affected Public: Business or other for-profit organizations, not-for-profit institutions, and state, local or tribal governments.

Estimated Number of Respondents: 100,000.

Estimated Time Per Respondent: 1 hour 30 minutes.

Estimated Total Annual Burden Hours: 150,000.

The following paragraph applies to all of the collections of information covered by this notice:

An agency may not conduct or sponsor, and a person is not required to respond to, a collection of information unless the collection of information displays a valid OMB control number. Books or records relating to a collection of information must be retained as long as their contents may become material in the administration of any internal revenue law. Generally, tax returns and tax return information are confidential, as required by 26 U.S.C. 6103.

Request for Comments: Comments submitted in response to this notice will be summarized and/or included in the request for OMB approval. All comments will become a matter of public record. Comments are invited on: (a) Whether the collection of information is necessary for the proper performance of the functions of the agency, including whether the information shall have practical utility; (b) the accuracy of the agency's estimate of the burden of the collection of information; (c) ways to enhance the quality, utility, and clarity of the information to be collected; (d) ways to minimize the burden of the collection of information on respondents, including through the use of automated collection techniques or other forms of information technology; and (e) estimates of capital or start-up costs and costs of operation, maintenance, and purchase of services to provide information.

Approved: May 12, 2005.

Glenn P. Kirkland,

IRS Reports Clearance Officer.

[FR Doc. E5–2495 Filed 5–18–05; 8:45 am]

BILLING CODE 4830–01–P

DEPARTMENT OF THE TREASURY

Internal Revenue Service

Proposed Collection; Comment Request for Revenue Procedures 2002–37, 2002–38, and 2002–39

AGENCY: Internal Revenue Service (IRS), Treasury.

ACTION: Notice and request for comments.

SUMMARY: The Department of the Treasury, as part of its continuing effort to reduce paperwork and respondent burden, invites the general public and other Federal agencies to take this opportunity to comment on proposed and/or continuing information collections, as required by the Paperwork Reduction Act of 1995, Public Law 104–13 (44 U.S.C. 3506(c)(2)(A)). Currently, the IRS is soliciting comments concerning Revenue Procedures 2002–37, 2002–38, 2002–39, Changes in Periods of Accounting.

DATES: Written comments should be received on or before July 18, 2005 to be assured of consideration.

ADDRESSES: Direct all written comments to Glenn P. Kirkland, Internal Revenue Service, room 6516, 1111 Constitution Avenue NW., Washington, DC 20224.

FOR FURTHER INFORMATION CONTACT: Requests for additional information or copies of revenue procedures should be directed to R. Joseph Durbala, (202) 622–3634, Internal Revenue Service, room 6407, 1111 Constitution Avenue NW., Washington, DC 20224, or through the internet at *RJoseph.Durbala@irs.gov.*

SUPPLEMENTARY INFORMATION:

Title: Changes in Periods of Accounting.

OMB Number: 1545–1786.

Revenue Procedure Numbers: Revenue Procedures 2002–37, 2002–38, and 2002–39.

Abstract: Revenue Procedures 2002–37, 2002–38, and 2002–39, provide the comprehensive administrative rules and guidance, for affected taxpayers adopting, changing, or retaining annual accounting periods, for federal income tax purposes. In order to determine whether a taxpayer has properly adopted, changed to, or retained an annual accounting period, certain information regarding the taxpayer's qualification for and use of the requested annual accounting period is required. The revenue procedures request the information necessary to make that determination when the information is not otherwise available.

Current Actions: There are no changes being made to these revenue procedures at this time.

Type of Review: Extension of a currently approved collection.

Affected Public: Business or other for-profit organization, individuals, not-for-profit institutions and farms.

Estimated Number of Respondents: 800.

Estimated Average Time Per Respondent: 53 minutes.

Estimated Total Annual Burden Hours: 700.

Also, the burden is reflected in the burdens of Forms 1128 and 2553.

The following paragraph applies to all of the collections of information covered by this notice:

An agency may not conduct or sponsor, and a person is not required to respond to, a collection of information unless the collection of information displays a valid OMB control number.

Books or records relating to a collection of information must be retained as long as their contents may become material in the administration of any internal revenue law. Generally, tax returns and tax return information are confidential, as required by 26 U.S.C. 6103.

Request For Comments: Comments submitted in response to this notice will be summarized and/or included in the request for OMB approval. All comments will become a matter of public record.

Comments are invited on: (a) Whether the collection of information is necessary for the proper performance of the functions of the agency, including whether the information shall have practical utility; (b) the accuracy of the agency's estimate of the burden of the collection of information; (c) ways to enhance the quality, utility, and clarity of the information to be collected; (d) ways to minimize the burden of the collection of information on respondents, including through the use of automated collection techniques or other forms of information technology; and (e) estimates of capital or start-up costs and costs of operation, maintenance, and purchase of services to provide information.

Approved: May 13, 2005.

Glenn P. Kirkland,

IRS Reports Clearance Officer.

[FR Doc. E5–2496 Filed 5–18–05; 8:45 am]

BILLING CODE 4830–01–P

DEPARTMENT OF THE TREASURY

Internal Revenue Service

Proposed Collection; Comment Request for Form 8840

AGENCY: Internal Revenue Service (IRS), Treasury.

ACTION: Notice and request for comments.

SUMMARY: The Department of the Treasury, as part of its continuing effort to reduce paperwork and respondent burden, invites the general public and other Federal agencies to take this opportunity to comment on proposed and/or continuing information collections, as required by the Paperwork Reduction Act of 1995, Public Law 104–13 (44 U.S.C. 3506(c)(2)(A)). Currently, the IRS is soliciting comments concerning Form 8840, Closer Connection Exception Statement for Aliens.

DATES: Written comments should be received on or before July 18, 2005, to be assured of consideration.

ADDRESSES: Direct all written comments to Glenn Kirkland, Internal Revenue Service, room 6512, 1111 Constitution Avenue, NW., Washington, DC 20224.

FOR FURTHER INFORMATION CONTACT: Requests for additional information or copies of the form and instructions should be directed to Larnice Mack at Internal Revenue Service, room 6512, 1111 Constitution Avenue, NW., Washington, DC 20224, or at (202) 622–3179, or through the Internet at *Larnice.Mack@irs.gov.*

SUPPLEMENTARY INFORMATION:

Title: Closer Connection Exception Statement for Aliens.

OMB Number: 1545–1410.

Form Number: 8840.

Abstract: Form 8840 is used by an alien individual, who otherwise meets the substantial presence test, to explain the basis of the individual's claim that he or she is able to satisfy the closer connection exception described in Reg. Section 301.7701(b)–2.

Current Actions: There are no changes being made to the form at this time.

Type of Review: Extension of a currently approved collection.

Affected Public: Individuals or households.

Estimated Number of Respondents: 350,000.

Estimated Time Per Respondent: 2 hours., 25 minutes.

Estimated Total Annual Burden Hours: 843,500.

The following paragraph applies to all of the collections of information covered by this notice:

An agency may not conduct or sponsor, and a person is not required to respond to, a collection of information unless the collection of information displays a valid OMB control number. Books or records relating to a collection of information must be retained as long as their contents may become material in the administration of any internal revenue law. Generally, tax returns and tax return information are confidential, as required by 26 U.S.C. 6103.

Request for Comments: Comments submitted in response to this notice will be summarized and/or included in the request for OMB approval. All comments will become a matter of public record. Comments are invited on: (a) Whether the collection of information is necessary for the proper performance of the functions of the agency, including whether the information shall have practical utility; (b) the accuracy of the agency's estimate of the burden of the collection of information; (c) ways to enhance the quality, utility, and clarity of the information to be collected; (d) ways to minimize the burden of the collection of information on respondents, including through the use of automated collection techniques or other forms of information technology; and (e) estimates of capital or start-up costs and costs of operation, maintenance, and purchase of services to provide information.

Approved: May 10, 2005.

Glenn Kirkland,

IRS Reports Clearance Officer.

[FR Doc. E5–2497 Filed 5–18–05; 8:45 am]

BILLING CODE 4830–01–P

DEPARTMENT OF THE TREASURY

Internal Revenue Service

Proposed Collection; Comment Request for Form 8697

AGENCY: Internal Revenue Service (IRS), Treasury.

ACTION: Notice and request for comments.

SUMMARY: The Department of the Treasury, as part of its continuing effort to reduce paperwork and respondent burden, invites the general public and other Federal agencies to take this opportunity to comment on proposed and/or continuing information collections, as required by the Paperwork Reduction Act of 1995, Public Law 104–13 (44 U.S.C. 3506(c)(2)(A)). Currently, the IRS is soliciting comments concerning Form 8697, Interest Computation Under the Look-Back Method for Completed Long-Term Contracts.

DATES: Written comments should be received on or before July 18, 2005, to be assured of consideration.

ADDRESSES: Direct all written comments to Glenn Kirkland Internal Revenue Service, room 6512, 1111 Constitution Avenue, NW., Washington, DC 20224.

FOR FURTHER INFORMATION CONTACT: Requests for additional information or copies of the form and instructions should be directed to Larnice Mack at Internal Revenue Service, room 6512, 1111 Constitution Avenue, NW., Washington, DC 20224, or at (202) 622–3179, or through the Internet at *Larnice.Mack@irs.gov.*

SUPPLEMENTARY INFORMATION:

Title: Interest Computation Under the Look-Back Method for Completed Long-Term Contracts.

OMB Number: 1545–1031.

Form Number: Form 8697.

Abstract: Taxpayers who are required to account for all or part of any long-term contract entered into after February 28, 1986, under the percentage of completion method must use Form 8697 to compute and report interest due or to be refunded under Internal Revenue Code section 460(b)93). The IRS uses Form 8697 to determine if the interest has been figured correctly.

Current Actions: There are no changes being made to the Form 8697 at this time.

Type of Review: Extension of a currently approved collection.

Affected Public: Business or other for-profit organizations and individuals.

Estimated Number of Respondents: 5,000.

Estimated Time Per Respondent: 13 hrs, 40 minutes.

Estimated Total Annual Burden Hours: 63,340.

The following paragraph applies to all of the collections of information covered by this notice:

An agency may not conduct or sponsor, and a person is not required to respond to, a collection of information unless the collection of information displays a valid OMB control number. Books or records relating to a collection of information must be retained as long as their contents may become material in the administration of any internal revenue law. Generally, tax returns and tax return information are confidential, as required by 26 U.S.C. 6103.

Request for Comments: Comments submitted in response to this notice will be summarized and/or included in the request for OMB approval. All comments will become a matter of public record. Comments are invited on:

(a) Whether the collection of information is necessary for the proper performance of the functions of the agency, including whether the information shall have practical utility; (b) the accuracy of the agency's estimate of the burden of the collection of information; (c) ways to enhance the quality, utility, and clarity of the information to be collected; (d) ways to minimize the burden of the collection of information on respondents, including through the use of automated collection techniques or other forms of information technology; and (e) estimates of capital or start-up costs and costs of operation, maintenance, and purchase of services to provide information.

Approved: May 12, 2005.

Glenn Kirkland,

IRS Reports Clearance Officer.

[FR Doc. E5–2498 Filed 5–18–05; 8:45 am]

BILLING CODE 4830–01–P

Corrections

Federal Register

Vol. 70, No. 96

Thursday, May 19, 2005

This section of the FEDERAL REGISTER contains editorial corrections of previously published Presidential, Rule, Proposed Rule, and Notice documents. These corrections are prepared by the Office of the Federal Register. Agency prepared corrections are issued as signed documents and appear in the appropriate document categories elsewhere in the issue.

ENVIRONMENTAL PROTECTION AGENCY

40 CFR Part 52

[R03–OAR–2004–DC–0007; FRL–7909–8]

Approval and Promulgation of Air Quality Implementation Plans; District of Columbia; VOC Emission Standards for AIM Coatings

Correction

In rule document 05–9312 beginning on page 24959 in the issue of Thursday, May 12, 2005, make the following correction:

§52.470 [Corrected]

On pages 24969 and 24970, in §52.470, in the table, in the column ''EPA approval date'', ''5/21/05'' should read ''5/12/05'' throughout the column.

[FR Doc. C5–9312 Filed 5–18–05; 8:45 am]

BILLING CODE 1505–01–D

REGULATORY INFORMATION SERVICE CENTER

Introduction to the Unified Agenda of Federal Regulatory and Deregulatory Actions

Correction

In proposed rule document 05–8796 beginning on page 26555 in the issue of Monday, May 16, 2005, make the following correction:

On page 26559, in the second column, following the signature block, the document line should read ''[FR Doc. 8796 Filed 05–13–05; 8:45 am]''.

[FR Doc. C5–8796 Filed 5–18–05; 8:45 am]

BILLING CODE 1505–01–D

DEPARTMENT OF TRANSPORTATION

Federal Aviation Administration

14 CFR Part 39

[Docket No. FAA-2005-21139; Directorate Identifier 2003-NM-196-AD]

RIN 2120-AA64

Airworthiness Directives; Bombardier Model CL600–1A11 (CL–600), Model CL–600–2A12 (CL–601), and Model CL–600–2B16 (CL–601–3A, CL–601–3R, and CL–604) Series Airplanes

Correction

In proposed rule document 05–9186 beginning on page 24331 in the issue of Monday, May 9, 2005, make the following corrections:

1. On page 24332, in the table **Messier-Dowty Service Bulletins**, under the column **Landing gear component**, the seventh entry should read ''MLG shock strut pin.''

2. On the same page, in the same table, under the column **Corresponding Bombardier service bulletin(s)**, the seventh entry should read ''601-0546.''

§39.13 [Corrected]

3. On page 24334, in §39.13, in Table 2, under the column **Messier-Dowty service bulletin**, the last entry should read ''M-DT SB7300–32–16, dated July 12, 2001.''.

4. On the same page, in the same section, in the same table, under the column **Model**, in the eighth entry remove the word ''retraction.''

[FR Doc. C5–9186 Filed 5–18–05; 8:45 am]

BILLING CODE 1505–01–D

DEPARTMENT OF TRANSPORTATION

Federal Aviation Administration

14 CFR Part 39

[Docket No. FAA-2005-20356; Directorate Identifier 2004-NM-115-AD]

RIN 2120-AA64

Airworthiness Directives; Boeing Model 737-100, -200, -200C, -300, -400, and -500 Series Airplanes

Correction

In proposed rule document 05–2834 beginning on page 7693 in the issue of Tuesday, February 15, 2005, make the following corrections:

§39.13 [Corrected]

1. On page 7695, in the second column, in §39.13, after amendatory instruction 2, in the next line, ''FAA–20356'' should read ''FAA–2005–20356.''

2. On the same page, in the third column, in the same section, under the heading **Optional Terminating Action**, in the first line, ''(1)'' should read ''(i).''

[FR Doc. C5–2834 Filed 5–18–05; 8:45 am]

BILLING CODE 1505–01–D

Federal Register

Thursday,
May 19, 2005

Part II

Department of the Transportation

Federal Motor Carrier Safety Administration

49 CFR Parts 360, 365 et al.
Unified Registration System; Proposed Rule

DEPARTMENT OF TRANSPORTATION

Federal Motor Carrier Safety Administration

49 CFR Parts 360, 365, 366, 368, 387 and 390

[Docket No. FMCSA–97–2349]

RIN 2126–AA22

Unified Registration System

AGENCY: Federal Motor Carrier Safety Administration (FMCSA), Department of Transportation (DOT).

ACTION: Notice of proposed rulemaking (NPRM); request for comments.

SUMMARY: FMCSA proposes a revised registration system. The Unified Registration System would apply to every motor carrier, freight forwarder and broker required to register with DOT under 49 CFR 390.19 or 49 U.S.C. 13901, except Mexico-domiciled motor carriers registering to operate between Mexico and points in the United States beyond border commercial zones along the U.S.-Mexico international border. The entities covered by this system would be required to register with FMCSA and periodically update registration information provided on a newly proposed registration form. This proposal applies to entities that are already subject to FMCSA Commercial Regulations, the Federal Motor Carrier Safety Regulations (FMCSRs), or the Hazardous Material Regulations (HMRs).

This action is being taken in response to section 103 of the ICC Termination Act of 1995 (ICCTA), which, among other things, requires the Secretary of Transportation (Secretary) to propose regulations to replace four current identification and registration systems with a single, on-line, Federal system. The purpose of this proposal is to consolidate and simplify current Federal registration processes and to increase public accessibility to data about interstate motor carriers, property brokers, and freight forwarders. FMCSA proposes to charge registration fees that will enable FMCSA to recoup costs associated with processing registration applications and administrative filings and maintaining this system.

DATES: You must submit comments on or before August 17, 2005.

ADDRESSES: You may submit comments, identified by DOT DMS Docket Number FMCSA–97–2349, by any of the following methods:

- Federal eRulemaking Portal: *http://www.regulations.gov*. Follow the instructions for submitting comments.
- Agency Web Site: *http://dms.dot.gov*. Follow the instructions for submitting comments on the DOT electronic docket site.
- Fax: 1–202–493–2251.
- Mail: Docket Management Facility; U.S. Department of Transportation, 400 Seventh Street, SW., Nassif Building, Room PL–401, Washington, DC 20590–0001.
- Hand Delivery: Room PL–401 on the plaza level of the Nassif Building, 400 Seventh Street, SW., Washington, DC, between 9 a.m. and 5 p.m., Monday through Friday, except Federal holidays.

Instructions: All submissions received must include the agency name and docket number or Regulatory Identification Number (RIN) for this rule. All comments received will be posted without change to *http://dms.dot.gov*, including any personal information provided. For detailed instructions on submitting comments and additional information on the rulemaking process, see the ''Public Participation'' heading of the **SUPPLEMENTARY INFORMATION** section of this document. For a summary of DOT's Privacy Act Statement or information on how to obtain a complete copy of DOT's Privacy Act Statement please see the ''Privacy Act'' heading under Rulemaking Analyses and Notices.

Docket: For access to the docket to read background documents or comments received, go to *http://dms.dot.gov* at any time or to Room PL–401 on the plaza level of the Nassif Building, 400 Seventh Street, SW., Washington, DC, between 9 a.m. and 5 p.m., Monday through Friday, except Federal holidays.

FOR FURTHER INFORMATION CONTACT: Mr. Robert F. Schultz, Jr., Office of Bus and Truck Standards and Operations, (202) 366–4001, Federal Motor Carrier Safety Administration, Department of Transportation, 400 Seventh Street, SW., Washington, DC 20590.

SUPPLEMENTARY INFORMATION:

Public Participation: The DMS is available 24 hours each day, 365 days each year. You can get electronic submission and retrieval help and guidelines under the ''help'' section of the DMS Web site. If you want us to notify you that we received your comments, please include a self-addressed, stamped envelope or postcard or print the acknowledgement page that appears after submitting comments on-line.

Comments received after the comment closing date will be included in the docket, and we will consider late comments to the extent practicable. FMCSA may, however, issue a final rule at any time after the close of the comment period.

Preamble Table of Contents

The following is an outline of the preamble.

I. Legal Basis
II. Introduction
III. Pre-ICCTA Background
IV. Summary of the Advance Notice of Proposed Rulemaking
V. Congressionally Mandated Policy Issues
A. Funding for State Enforcement of Motor Carrier Safety Regulations
B. Single State Registration System
C. Public Safety; Efficient Delivery of Transportation Services
D. Registration of Private Motor Carriers and Exempt For-hire Motor Carriers
VI. The Proposed Replacement System
A. Registration
B. USDOT Numbers
C. Transfer of Operating Authority
D. Biennial Update Requirement
E. Proposed User Fees for the New System
F. Registration Fees
G. General Fee Policy Changes and Revised Fees
H. Financial Responsibility
1. Bodily Injury and Property Damage Insurance (BI&PD) Requirement
2. Cargo Insurance Requirement
3. Insurance Filings by Insurers, Surety Companies and Financial Institutions
4. Self-Insurance
I. Designation of Process Agents
J. Administrative Filings
K. Cancellation and Reinstatement of USDOT Numbers
L. The New Application Form
M. Multi-Phase Application Process
VII. Special Transit Operation Provisions
VIII. Systems Under Consideration for Merger with the New Unified Registration System
A. Registration for Certain Mexico-Domiciled Motor Carriers
B. Hazardous Materials Safety Permit Application Process
C. Hazardous Materials Cargo Tank Registration Process
IX. Performance and Registration Information Systems Management Program (PRISM)
X. Regulatory Evaluation of the Unified Registration System NPRM Summary of Benefits and Costs
A. Background and Summary
B. Costs
1. New Registration Fees for Private and Exempt For-Hire Carriers
2. New Process Agent Filings Required by FMCSA
3. New Requirement and Fee for Insurance Representatives of Exempt For-Hire Carriers and Private Carriers of Hazardous Materials to File Proof of Liability Insurance
4. New Requirement and Fee for Requiring Private Hazmat and Exempt For-Hire Carriers to File Reinstatement Requests
5. Eliminating Transfers of Operating Authority
6. Revising Other FMCSA Fees
7. Total Costs of URS NPRM
C. Benefits
1. Cost Savings from Streamlined New Entrant Registration Process

2. Safety Benefits from Process Agent Designation Filing Requirement
3. Cost Savings from Eliminating Cargo Insurance Filing Requirement
4. Total Benefits
5. Net Benefits from URS NPRM
XI. Appendix to the Preamble—Proposed Form MCSA–1 and Instructions
XII. Rulemaking Analyses and Notices
List of Subjects

I. Legal Basis for the Rule

The ICC Termination Act of 1995 [Pub. L. 104–88, December 29, 1995, 109 Stat. 888] (ICCTA) created a new 49 U.S.C. 13908 directing ''[t]he Secretary, in cooperation with the States, and after notice and opportunity for public comment,'' * * * to ''issue regulations to replace the current Department of Transportation identification number system, the single State registration system under section 14504, the registration system contained in this chapter, and the financial responsibility information system under section 13906 with a single, on-line, Federal system. The new system shall serve as a clearinghouse and depository of information on and identification of all foreign and domestic motor carriers, brokers, and freight forwarders, and others required to register with the Department as well as information on safety fitness and compliance with required levels of financial responsibility. In issuing the regulations, the Secretary shall consider whether or not to integrate the requirements of section 13304 into the new system and may integrate such requirements into the new system.'' Title 49 U.S.C. 13908(c) also authorized the Secretary to ''establish, under section 9701 of title 31, a fee system for registration and filing evidence of financial responsibility under the new system under subsection (a). Fees collected under the fee system shall cover the costs of operating and upgrading the registration, including all personnel costs associated with the system.'' Congress specified the rule must address:

- Funding for State enforcement of motor carrier safety regulations
- A determination of whether the existing Single State Registration System (SSRS) is duplicative and burdensome;
- The justification and need for collecting the statutory SSRS fee under 49 U.S.C. 14504(c)(2)(B)(iv);
- The public safety;
- The efficient delivery of transportation services; and
- How and under what conditions to extend the registration system to private motor carriers and exempt for-hire motor carriers.

This NPRM proposes a unified registration system and as such is well within the authority of the 1996 Act. The policy issues are addressed in the preamble under section V—Congressionally Mandated Policy Issues.

Today's NPRM is concerned with § 13908, the registration of motor carriers, brokers and freight forwarders. FMCSA proposes a new Federal on-line registration system for every motor carrier, freight forwarder and broker required to register with DOT under 49 CFR 390.19 or 49 U.S.C. 13901, except Mexico-domiciled motor carriers registering to operate between Mexico and points in the United States beyond border commercial zones along the U.S.-Mexico international border. Title 49 CFR 390.19 concerns the safety registration of all for-hire and private motor carriers, while 49 U.S.C. 13901 covers non-exempt for-hire motor carriers, freight forwarders and brokers. The registration systems for Mexico-domiciled carriers requesting to operate between Mexico and points in the United States beyond border commercial zones along the U.S.-Mexico international border, as well as Hazardous Materials Safety Permits and Hazardous Materials Cargo Tanks, are discussed in greater detail under section VIII—Systems under Consideration for Merger with the New Unified Registration System.

FMCSA would integrate three of the four systems stipulated under 49 U.S.C. 13908(a) into a new unified system. Also as directed by that statutory provision, we have considered integration of the fourth system, the Single State Registration System (SSRS) under section 14504. We find that registration and financial responsibility compliance information currently generated by the SSRS is fully duplicated by the information collected under the proposed Unified Registration System and we preliminarily endorse the concept of integrating this fourth system under this rule. We have not proposed elimination of the SSRS at this time, however, because we require additional information to determine whether we can meet the conditions prescribed by Congress for merger and elimination of SSRS under section 13908(d). That provision directs that before we can propose elimination of the SSRS, we must ensure that: (1) Fees collected and distributed to the States under the new Unified Registration System will be sufficient to provide each SSRS-participating State with at least a level of revenue commensurate with what the State received from SSRS fees in fiscal year 1995; and (2) all States would receive a minimum apportionment from the distribution of fees collected under the proposed Unified Registration System. As amplified in the subsequent ''Single State Registration System'' discussion, we specifically seek public comment on fee structures or alternative measures that would permit full integration of the SSRS into the Unified Registration System and, in turn, would allow elimination of the SSRS program, while preserving the reimbursement and apportionment levels mandated by 49 U.S.C. 13908(d). We also seek public comment on the advisability of recommending legislative change in a report to Congress under 49 U.S.C. 13908(e)(3) in order to create greater latitude for incorporating the SSRS program into the Unified Registration System proposed here.

The new system would incorporate the section 13304 requirement for a motor carrier, freight forwarder, or broker to designate an agent(s) for service of process for each State in which it intends to operate. Under the existing system, only non-exempt for-hire carriers must make such filings. The NPRM would extend the requirement to all registrants, including exempt for-hire and private carriers. Title 49 U.S.C. 503 grants authority to extend the process agent filing requirement to private carriers. When FMCSA (then FHWA) solicited comment on whether to compel private carriers to make such filings, the public responded that exempt for-hire and private carriers should be subject to the same process agent filing requirement as non-exempt for-hire motor carriers, brokers, and freight forwarders (see the advance notice of proposed rulemaking (ANPRM) titled *Motor Carrier Replacement Information/Replacement System* published August 26, 1996 at 61 FR 43816). FMCSA believes extending the requirement to exempt for-hire and private carriers would ensure the agency and the public are able to contact a carrier when necessary.

Title 31 U.S.C. 9701 establishes general authority for agencies to ''charge for a service or thing of value provided by the agency.'' Accordingly, FMCSA proposes to charge registration fees that will enable the agency to recoup costs associated with processing registration applications and administrative filings. All applicants, except certain FTA grantees and State sub-grantees, would pay a $200 registration fee and pay for certain administrative filings.

The Motor Carrier Safety Act of 1984 requires the Secretary to prescribe regulations on commercial motor vehicle safety. The regulations shall

prescribe minimum safety standards for commercial motor vehicles (CMVs). At a minimum, the regulations shall ensure that (1) CMVs are maintained, equipped, loaded, and operated safely; (2) the responsibilities imposed on operators of CMVs do not impair their ability to operate the vehicles safely; (3) the physical condition of operators of CMVs is adequate to enable them to operate the vehicles safely; and (4) the operation of CMVs does not have a deleterious effect on the physical condition of the operators (49 U.S.C. 31136(a)).

This NPRM is intended to streamline the registration process and ensure that FMCSA can more efficiently track CMVs and ensure their safe operation. As such, it implements the section 31136(a)(1) mandate that FMCSA's regulations ensure that CMVs are maintained and operated safely. The Unified Registration System imposes no operational responsibilities on drivers. Therefore, this proposed regulation would not impair a driver's ability to operate vehicles safely (section 31136(a)(2)), would not impact the physical condition of drivers (section 31136(a)(3)), and would not have a deleterious effect on the physical condition of drivers (section 31136(a)(4)). Accordingly, FMCSA has addressed the statutory mandate of section 31136(a) and finds that the proposed regulation is fully responsive to this mandate.

II. Introduction

As noted, FMCSA proposes a unified registration system, as required by section 103 of ICCTA. Section 103, codified as 49 U.S.C. 13908, directs the Secretary of Transportation to issue a rule to replace the following four systems with a ''single, on-line, Federal system:''

(1) The current Department of Transportation identification number system (49 CFR part 390);

(2) The Single State Registration System (SSRS) under 49 U.S.C. 14504 (49 CFR part 367);

(3) The registration system under 49 U.S.C. 13901–13905 (49 CFR part 365); and

(4) The financial responsibility information system under 49 U.S.C. 13906 (49 CFR part 387).

A detailed discussion of these systems appears in the 1996 ANPRM. The ANPRM is also available in the docket for this rule; access to the docket is explained above in **ADDRESSES.**

The proposed replacement system would identify and house information about all interstate motor carriers, brokers and freight forwarders, and others that must register with the Department of Transportation. It would also be a depository for information on safety fitness and compliance with financial responsibility requirements.

III. Pre-ICCTA Background

The Motor Carrier Act of 1935 [Pub. L. 74–255, 47 Stat. 543] placed regulatory authority over the motor carrier industry with the Interstate Commerce Commission (ICC). ICC was responsible for issuing operating authority and permits and administering matters related to insurance, safety, and enforcement as they applied to non-exempt for-hire common and contract motor carriers.[1] ICC exercised safety oversight over all for-hire and private motor carriers, but its economic oversight encompassed only non-exempt for-hire motor carriers.

In 1967, the Department of Transportation (DOT) was created and responsibility for motor carrier safety activities was transferred from ICC to the Bureau of Motor Carrier Safety within FHWA. The Bureau of Motor Carrier Safety subsequently became the Office of Motor Carriers. FHWA required all interstate motor carriers engaged in interstate or foreign commerce to obtain a USDOT identification number from the agency for safety oversight purposes (53 FR 18042, May 19, 1988). Affected parties included for-hire motor carriers subject to ICC economic oversight, as well as motor carriers exempt from ICC jurisdiction (such as private carriers and exempt for-hire motor carriers).

ICC continued to regulate non-exempt for-hire interstate and foreign motor carriers of property and passengers, issuing certificates of public convenience and necessity (for common carriers), permits (for contract carriers and freight forwarders[2]), or licenses (for property brokers). These entities were assigned an MC or MX number as evidence of ICC authority/licensure, except freight forwarders who received FF numbers. Motor carriers, property brokers and freight forwarders were subject to financial responsibility filing requirements as a condition for receipt and retention of operating authority. ICC maintained an up-to-date, automated insurance monitoring system to validate compliance with the financial responsibility requirements.

ICCTA eliminated ICC, and transferred certain ICC regulatory responsibilities to the DOT. The savings provision in section 204 of ICCTA preserved all effective ICC regulations, rules and decisions until the Secretary finds modification of these documents is warranted, thereby preserving the status quo. FHWA gave public notice of the effectiveness of these ICC documents in 61 FR 14372, April 1, 1996.

IV. Summary of the Advance Notice of Proposed Rulemaking

On August 26, 1996, FMCSA (then FHWA) published an ANPRM (61 FR 43816) announcing plans to create a single, on-line Federal registration system. The ANPRM provided an historical overview to support why a replacement system is necessary, included a description of the four systems to be replaced, and posed specific questions for comment.

FMCSA received 104 comments to the docket that may be viewed on the Internet by visiting *http://dms.dot.gov/search* and typing the last four digits of the docket number in the heading of this document. FMCSA has analyzed the comments to the ANPRM and taken them into consideration in the formulation of this notice.

Most of the commenters supported the proposal of a single, on-line system with the following features:

1. Fees assessed on all applicants and based solely upon the actual costs to operate the system;
2. A requirement to register with a single governmental entity;
3. Elimination of the SSRS and a reimbursement of lost revenue for fees to impacted States;
4. A requirement that all registrants file proof of financial responsibility; and
5. A requirement that all registrants file a designation of persons upon whom court process may be served (designation of agents for service of process).

Several commenters suggested that FMCSA achieve complete regulatory uniformity for all entities under its jurisdiction by either eliminating requirements or broadening their applicability to all entities. Some responded that all carriers should be required to provide similar information in the new registration system. For example, some recommended that FMCSA should require all motor

[1] The Motor Carrier Act and subsequent legislation created numerous exemptions to ICC jurisdiction based upon the commodity transported (*e.g.,* fresh produce and other agricultural products) or circumstances underlying the transportation (*e.g.,* property or passengers having a prior or subsequent movement by air carrier). These exemptions were retained in chapter 139 of ICCTA. For purposes of this document, the term ''non-exempt'' or ''exempt'' for-hire carrier refers to whether the carrier is subject to the chapter 139 registration requirements.

[2] Following deregulation of the freight forwarding industry in 1986, only freight forwarders of household goods had to be licensed by the ICC. ICCTA subsequently reinstated the registration requirement for all freight forwarders.

carriers to file evidence of insurance while others wanted FMCSA to remove the existing insurance filing requirement.

Although FMCSA has considered these suggestions, we cannot propose or implement them in a rulemaking proceeding without first obtaining legal authority through statutory change. Section 13908(e)(3) directs the Secretary to transmit to Congress a report on any findings of this rule and the changes the DOT decides to implement, together with recommendations for any proposed legislative changes. FMCSA plans in that report to address policies it wishes to adopt in response to the 1996 ANPRM comments which require statutory change.

FMCSA has incorporated several of the ANPRM responses in formulating today's proposal. In response to public comment, the USDOT Number would replace the MC, MX, and FF numbers, and all motor carriers under FMCSA jurisdiction would be required to file a process agent designation with FMCSA.

V. Congressionally Mandated Policy Issues

Congress directed the Secretary to address the following policy issues in this rule:

(1) Funding for State enforcement of motor carrier safety regulations;

(2) A determination of whether the existing SSRS is duplicative and burdensome;

(3) The justification and need for collecting the statutory SSRS fee under 49 U.S.C. 14504(c)(2)(B)(iv);

(4) The public safety;

(5) The efficient delivery of transportation services; and

(6) How and under what conditions to extend the registration system to private motor carriers and exempt for-hire motor carriers.

A. Funding for State Enforcement of Motor Carrier Safety Regulations

FMCSA believes that funds provided by the Motor Carrier Safety Improvement Act of 1999 [Pub. L. 106–159, December 9, 1999, 113 Stat. 1764] (MCSIA) and the Transportation Equity Act for the 21st Century [Pub. L. 105–178, June 9, 1998, 112 Stat. 418] (TEA–21) adequately satisfied congressional concerns regarding funding for State enforcement of motor carrier safety regulations. Total funding for State enforcement activities through the FMCSA Motor Carrier Safety Assistance Program (MCSAP) has increased substantially since 1995 and is summarized below.

Fiscal year	Amount in millions
1995	$74
1996	77
1997	78
1998	79
1999	90
2000	90
2001	155
2002	160
2003	165

Although Congress has not yet passed a new surface transportation reauthorization bill for years beyond 2003, FMCSA anticipates Congress will do so and that the legislation will adequately address funding for the State enforcement of Federal Motor Carrier Safety Regulations.

B. Single State Registration System

Under the Single State Registration System (SSRS), currently conducted by 38 States in accord with the requirements of 49 U.S.C. 14504, interstate, for-hire motor carriers are required to register annually with one State and provide evidence to the State of Federal registration under 49 U.S.C. chapter 139. In addition to filing and maintaining evidence of Federal registration, motor carriers are required annually to: (1) File satisfactory proof of required insurance or qualification as a self-insurer; (2) pay required fees directly to the SSRS base State; and (3) file the name of a local agent for service of process. Congress designated the SSRS among those programs that we should consider for inclusion in the Unified Registration System under 13908(a), but further provided in 49 U.S.C. 13908(d) that before we can propose elimination of the SSRS, we must be able to ensure that: (1) Registration fees collected under the proposed Unified Registration System and distributed to the States each fiscal year would be sufficient to provide each SSRS-participating State with at least as much revenue as it received from SSRS fees in fiscal 1995 [49 U.S.C. 13908(d)(1)]; and (2) all States would receive a minimum apportionment from the distribution of fees collected under the proposed Unified Registration System.

Comments received in response to the ANPRM suggest strongly that the existing SSRS is both duplicative and burdensome when assessed against current Federal registration and licensing requirements and particularly when evaluated under the proposed Unified Registration System. The essential information collected through SSRS (evidence of registration by interstate, for-hire carriers and proof of their compliance with financial responsibility requirements) already is available to all States through the FMCSA Licensing and Insurance database and will remain so under the Unified Registration System proposed here. In fact, SSRS participating States currently tap into the Licensing and Insurance database to download verifications of carriers' financial responsibility.

It appears that the only information collected by the SSRS that is not currently available to FMCSA and would not be collected through Form MCSA–1 filings is the operational distribution of vehicles among States where registered carriers perform their interstate service. Because operational distribution data is collected solely for the purpose of apportioning SSRS registration fees among participating States, it is essentially an informational by-product of the SSRS fee collection system, and clearly provides neither safety nor compliance information to State users.

The proposed Unified Registration System would generate the same registration and financial responsibility information captured by the SSRS and, thus, integrates the operational and compliance features of the SSRS. Continuation of the SSRS in tandem with the Unified Registration System proposed here would therefore appear to be duplicative. In view of the relative ease and universality with which the registration and financial responsibility compliance information can be accessed by the States through the FMCSA databases, the SSRS requirement that carriers maintain copies of their SSRS registration receipts in each vehicle also would appear to be unnecessarily burdensome. Although some participating SSRS States may support safety or transportation efficiency initiatives with revenues generated by the SSRS fee system prescribed under 49 U.S.C. 14504(c)(2)(B)(iv), there is no requirement that they do so. Indeed, comments in response to the ANPRM suggest that SSRS revenues are as likely as not to find their way into States' general funds where they may be applied to any programmatic purpose.

Accordingly, when assessed in light of relevant factors prescribed at 49 U.S.C. 13908(b), the SSRS appears to be a viable candidate for integration with the other three systems proposed for unification. Moreover, the SSRS could for all practical purposes be considered already fully integrated under this proposal, inasmuch as all information critical to the SSRS would be captured under Form MCSA–1 and available to

States through the on-line databases maintained by the FMCSA.

Despite these considerations, we cannot at this time propose elimination of the SSRS. To be consistent with the 49 U.S.C. 13908(d) criteria for eliminating the SSRS program, the FMCSA would need to reimburse from Unified Registration System fees an annual amount totaling approximately $96 million to the 38 States currently participating in the SSRS and would further need to ensure availability of additional funds for distribution as a minimum apportionment among all States. Financing the required levels of State reimbursement would result in fees approximating $2300 per carrier, an expense that we believe would be unreasonably burdensome.

The FMCSA specifically seeks public comment on the implications of this fee-based reimbursement to States as a means of preserving their SSRS-generated revenues and allowing for the required minimum apportionment, were the SSRS program to be eliminated. In addition, we seek public comment on alternative means by which we might ensure the required annual reimbursement and minimum apportionment levels under a fee assessment schedule different from that proposed here. Comments to the ANPRM, for example, mentioned, but did not necessarily endorse, the concept of imposing additional fees on insurers or assessing unified registration fees on other than a flat rate per carrier basis—such as per vehicle fees, a graduated rate based on fleet size, or a total carrier revenue basis. We would welcome comments on the viability of these and other alternatives as a means of fully integrating SSRS into the Unified Registration System, eliminating the SSRS program as presently observed by participating States, and still preserving the reimbursement and apportionment obligations imposed by 49 U.S.C. 13908(d).

Upon evaluation of the comments received in response to this issue, we will consider whether to recommend in a report to Congress under 49 U.S.C. 13908(e)(3) legislative changes to eliminate (1) the SSRS program as prescribed under 49 U.S.C. 14504; and/or (2) the reimbursement and apportionment requirements of 49 U.S.C. 13908(d). It is our preliminary conclusion, based on comments submitted in response to the ANPRM and upon our assessment of a viable fee structure for the Unified Registration System, that all informational benefits of the existing SSRS program are fully captured by the rule proposed here and that reasonable registration fees associated with the proposed system could not sustain the reimbursement and apportionment requirements of the present statute. We encourage commentors to address specifically the policy and legislative implications of this preliminary conclusion.

C. Public Safety; Efficient Delivery of Transportation Services

FMCSA believes the proposals in this rule address public safety and the efficient delivery of transportation services as intended by Congress. FMCSA has established a requirement under 49 CFR 390.19 for interstate carriers operating in the U.S. to update their information biennially and proposes to continue that requirement in this rule. The effectiveness and usefulness of FMCSA safety-related initiatives such as the Motor Carrier Safety Status Measurement System (SafeStat) and the Performance and Registration Information Systems Management Program (PRISM) are directly linked to the accurate and efficient collection and reporting of motor carrier safety data. Timely and accurate safety information has multiple benefits—it enables FMCSA to: (1) Track safety performance trends; (2) develop more effective driver and vehicle safety programs; (3) monitor the safety status of individual carriers; (4) ensure carrier compliance with FMCSRs; and (5) track any changes in the motor carrier industry that may affect carrier safety.

D. Registration of Private Motor Carriers and Exempt For-Hire Motor Carriers

FMCSA has carefully considered the extent to which the registration process should include private motor carriers and exempt for-hire motor carriers. This rule proposes to extend the public liability insurance filing requirements to private carriers of hazardous materials and exempt for-hire motor carriers. FMCSA does not propose to extend the insurance filing requirement to private carriers of non-hazardous commodities because there is currently no statutory authority to do so. Additionally, FMCSA proposes to require all motor carriers to file a process agent designation with FMCSA as a condition for registration. FMCSA believes there is an inherent crash risk in all interstate commercial motor vehicle operations due to the vehicle miles traveled and exposure to other vehicles on the highway. Accordingly, this rule proposes that most carriers, except private carriers of non-hazardous materials, be required to provide proof of financial responsibility and that all carriers be equally accessible for service of legal process. Expanding these filing requirements would result in greater safety benefits to the general public and enhance the ability to easily obtain motor carrier information when necessary.

Motor carriers conducting operations in interstate commerce have been required to file the MCS–150 prior to commencing operations since July 2000, pursuant to ICCTA and 49 CFR 390.19. Shortly after receipt of a completed MCS–150, FMCSA assigns a USDOT Number to the motor carrier and notifies it of the number assigned. All safety performance data on each motor carrier are linked to the USDOT Number. This includes roadside inspection data, crash data, and safety and compliance review information. The USDOT Number is used to link data together to produce summaries or reports on specific motor carriers.

VI. The Proposed Replacement System

A. Registration

FMCSA intends to create a unified registration process consistent with ICCTA requirements. All private or for-hire motor carriers transporting property or passengers in interstate commerce in the U.S. would be required to register with FMCSA except Mexico-domiciled motor carriers registering to operate between Mexico and points in the United States beyond border commercial zones along the U.S.-Mexico international border. Requiring these entities to register allows FMCSA to have a more complete census of motor carriers under its jurisdiction. This information could then be shared with other Federal and State regulatory agencies, as well as the general public, which would aid in promoting safety. The majority of comments to the ANPRM in this docket support the creation of a more simplified registration system that includes the universe of motor carriers subject to FMCSA jurisdiction.

FMCSA also proposes that property brokers and freight forwarders be included in the unified system because ICCTA requires us to register them and ensure that they maintain the necessary evidence of financial responsibility.

The proposed registration system would simplify the registration process for motor carriers in that motor carriers would only be required to complete one form, proposed Form MCSA–1—FMCSA Registration Form (USDOT Number Application). Under the current system, there are six forms, with most carriers being required to file at least two of the six. Motor carriers will no longer have to decide which form(s) to

complete, hoping to complete the correct form(s) on the initial application.

This proposal encourages continued use of electronic filing because it significantly reduces processing time for registration applications and related documents. Currently, motor carriers and other applicants have the option of using the Safety and Fitness Electronic Records System (SAFER) on-line site to apply for operating authority, obtain a USDOT Number and make safety certifications. Applicants pay registration fees and civil forfeiture fines by credit card using an electronic link from SAFER to the U.S. Department of Treasury's on-line financial management service (Pay.Gov). Electronic filing reduces current paper-based processing time by between 2 to 4 weeks (based on the additional time required for applications to reach FMCSA by mail and to manually process them.)

If this notice is promulgated as a final rule, the new integrated on-line application process would replace the existing electronic options for filing applications for operating authority, a USDOT Number and related documents. FMCSA believes the proposed on-line registration system would significantly reduce application-processing time. An applicant would not need to determine the appropriate application to file, and the on-line replacement system would feature a built-in error-checking feature to alert the applicant when incorrect information has been entered, prompting for valid information. This quality control feature would decrease time spent by agency employees contacting applicants to correct the application. Incomplete applications would automatically be rejected by the system. As a result, application processing would be more efficient for both customers and FMCSA.

FMCSA proposes an on-line application process because: (1) More than 70 percent of motor carriers in the United States now have Internet access, with the trend clearly increasing; (2) there is widespread public access to computers and the Internet in public libraries, Internet cafes, or other commercial establishments; (3) automated error-checking would result in more accurate information about the applicant; (4) on-line filing would allow USDOT Numbers to be issued in a more timely manner, and (5) electronic filing is more cost-effective for FMCSA compared to manually processing applications.

Although FMCSA would not mandate electronic filing of registration applications and related documents at this time, we invite comments and suggestions regarding the following issues:

(1) What would be the impact (benefits or hardships) on applicants of a mandatory on-line filing requirement?

(2) Should FMCSA immediately require on-line filing or should there be a phase-in period for mandatory on-line filing? If so, how long should the phase-in period be?

Current registration procedures in 49 U.S.C. 13902 allow anyone to oppose a request for permanent operating authority by non-exempt for-hire motor carriers, property brokers, and freight forwarders, provided the protest is based upon the applicant's failure to comply with: (1) The registration procedures; (2) applicable DOT regulations, including the FMCSRs and the HMRs; (3) the safety fitness standards; and/or (4) financial responsibility requirements. This proposed Unified Registration System would continue to allow protests for applications covered under section 13902, but would not extend the right of protest to applications for registration filed by private motor carriers or exempt for-hire motor carriers. Information on opposing a registration is under proposed 49 CFR part 360, subpart B of this proposal.

B. USDOT Numbers

The current registration systems administered by FMCSA use four identification numbers: the USDOT Number, which most motor carriers subject to FMCSA jurisdiction are required to obtain, the Motor Carrier (MC) number, which is assigned to non-exempt for-hire motor carriers and brokers registering under chapter 139; the FF number which is assigned to freight forwarders; and the MX number, which is assigned to Mexico-domiciled carriers operating in the U.S. border commercial zones.

FMCSA proposes to discontinue issuance of MC, MX and FF numbers and to phase out the use of current MC, MX and FF numbers within 2 years of the effective date of a final rule. The USDOT Number would become the sole identification number for all entities registered by DOT. This approach is prudent and simple because all registered motor carriers have a USDOT Number and because 16 States have elected to use the USDOT numbering system for registering intrastate motor carriers and their vehicles. Pursuant to 49 CFR 390.21, motor carriers would not need to remove the obsolete numbers from their vehicles.

FMCSA would issue a USDOT Number with a distinctive suffix to any Mexico-domiciled carrier granted registration. This unique USDOT Number would display on the side of the vehicle pursuant to the CMV marking requirement under 49 CFR 390.21, and would meet DOT's obligation under section 350(a)(4) of the 2002 Department of Transportation Appropriations Act [Pub. L. 107–87, Title III, section 350, Dec. 18, 2001, 115 Stat. 864] by allowing FMCSA to distinguish Mexico-domiciled motor carriers authorized to conduct operations beyond the border commercial zones from those authorized for only within-zone operations.

C. Transfer of Operating Authority

As stated above, FMCSA now assigns a unique USDOT Number to each corporation, partnership or individual proprietorship that is responsible for the safety of interstate motor carrier operations. FMCSA also assigns unique USDOT Numbers to subsidiary corporations. Generally speaking, USDOT Numbers are assigned to one carrier and remain assigned to that carrier. Motor carriers that obtain a USDOT Number under 49 CFR 390.19, but are not required to register with FMCSA under 49 U.S.C. Chapter 139, are encouraged but not required to notify the agency when changes in ownership occur. Motor carriers that register under section 13901 are however subject to notification requirements.

Current part 365, subpart D permits for-hire motor carriers, brokers and freight forwarders that register under chapter 139 to merge, transfer or lease their operating authority (identified by MC or FF numbers), and establishes procedures for agency approval of these transactions. These entities are required to file transfer applications with FMCSA and pay a $300 fee.

ICCTA removed the provisions governing transfers of operating authority by repealing former 49 U.S.C. 10926. As a result, FMCSA (then FHWA) proposed removing the transfer regulations in a February 13, 1998, NPRM (63 FR 7362). In response to this proposal, the Distribution & LTL Carriers Association (DLTL), the Transportation Lawyers Association (TLA), Landstar System, Inc., the American Bus Association (ABA), and Federal Express Corporation argued that disallowing transfer of registration would subject motor carriers to a more expensive registration process when ownership changes occur—a cost without a corresponding safety benefit. Most of these additional costs would result from having to change MC numbers on vehicles. DLTL contended

that continuing to allow transfers would ''assist * * * in keeping track of the existing applicant universe and calculating new entrants.'' TLA, Landstar, and ABA commented about the costs and burdens resulting from elimination of transfer approval, but did not provide specific figures.

On May 16, 2001, FMCSA published a notice in the **Federal Register** (66 FR 27059) announcing the withdrawal of the February 1998 NPRM with the intention of addressing the transfer issue in today's rulemaking action.

FMCSA proposes to remove regulations in 49 CFR part 365, subpart D that govern the transfer of operating authority. As a result of this action, MC numbers would no longer be subject to transfer. Although commenters to the February 1998 NPRM were concerned about the cost of re-marking vehicles with new MC numbers if transfers were not allowed, FMCSA has discontinued use of the MC number to identify vehicles and now requires all FMCSA regulated motor carriers to mark their commercial motor vehicles with their USDOT Number and the legal or ''doing business as'' name of the business entity that owns the motor carrier. See the final rule entitled *Federal Motor Carrier Safety Regulations, General; Commercial Motor Vehicle Marking,* published in the June 2, 2000, **Federal Register** at 65 FR 352387. Furthermore, as discussed above, FMCSA proposes to issue only a USDOT Number and discontinue use of MC, MX and FF numbers.

Unlike chapter 139 certificates and permits, which have traditionally been considered transferable motor carrier assets, a USDOT Number is a unique identifier used to monitor a carrier's safety performance. As such, the USDOT Number never has been subject to transfer. In order to preserve the sanctity of the number as an identifier of each entity's operational profile and safety history, the proposed rule preserves the prohibition on transfers.

The proposed rule would continue to permit retention of the existing USDOT Number in instances where there is a change in legal name, form of business, or address, provided that there is no change in the ownership, management, or control of the involved entity. Circumstances in which retention of the USDOT Number would be permissible include: (1) A change in the legal name of a sole proprietorship, corporation, or partnership: (2) a change in the trade name or assumed name of an entity; and (3) a change in the form of a business, such as the incorporation of a partnership or sole proprietorship. We specifically invite commenting parties to identify additional instances in which FMCSA might permit retention of a USDOT Number following structural, practical, or ministerial changes to a registered entity.

To ensure the continuing relevance and viability of the USDOT Number as a unique identifier and repository for safety data associated with a particular entity, the proposed rule would require all entities requesting a change in legal name, form of business, or address to: (1) File a revised From MCSA–1 within 20 days of the precipitating change; and (2) submit a certification accompanying the revised Form MCSA–1 confirming that there has been no change in the ownership, management, or control of the entity holding the involved USDOT Number. This prescribed process would allow FMCSA to monitor more closely and in a timely manner informational changes affecting all entities holding USDOT Numbers. The proposed 20-day notification period would impose a time limit for submitting changes in key information for the first time on most registrants and would abbreviate the 45-day notification period currently applicable to Mexico-domiciled carriers operating in border commercial zones under 49 CFR 368.4. The 20-day notification period would apply to all carriers, including Mexico-domiciled carriers operating in border commercial zones.

D. Biennial Update Requirement

Under current § 390.19, carriers are required to file Form MCS–150, Motor Carrier Identification Report biennially, as provided by section 217 of MCSIA. Carriers now file Form MCS–150 on-line, by mail or by fax without a fee. The registration updates provide valuable information about carriers and their fleets, and provide useful data for assessing safety performance. This rule proposes to replace Form MCS–150 with the MCSA–1, which contains a section specifically developed for the biennial update. The requirement to update identification information would be removed from § 390.19, re-designated as § 360.25 and made applicable to all entities under FMCSA jurisdiction, including passenger and property carriers, freight forwarders, and property brokers, except Mexico-domiciled motor carriers registering to operate between Mexico and points in the United States beyond border commercial zones along the U.S.-Mexico international border. This rule also proposes at § 360.25 that notice of changes to key identifying information, such as changes in the legal name, form of business, or address be filed with FMCSA within 20 days of the change. This requirement is also a critical component of the goal of obtaining and maintaining accurate, current and timely information, as required by section 217 of MCSIA.

States participating in the joint Federal-State PRISM program check motor carriers' MCS–150 ''date of last update'' in FMCSA information systems as part of their annual International Registration Plan (IRP) license plate renewal processes. If the motor carrier's MCS–150 data will exceed 24 months old before the end of the license plate registration period, the State requires them to update their MCS–150 data as a condition for receiving their IRP license plate. This approach ensures that motor carriers who obtain IRP license plates in PRISM states cannot let their MCS–150 data expire. FMSCA has determined that motor carriers who update their MCS–150 data in this manner already meet the periodic filing requirement of the current 49 CFR 390.19 and would require no additional filing with FMCSA. Such carriers would need to continue to comply with the § 360.25 requirement to file accurate information. The PRISM process is discussed in more detail later in this document.

E. Proposed User Fees for the New System

This rule proposes revised and new fees to maintain the information systems necessary to accurately identify motor carriers, brokers, and freight forwarders operating in interstate commerce. Until this rule, FMCSA had not proposed a fee schedule for recouping costs associated with its increased responsibilities for maintaining complete and accurate information on entities it regulates.

Title 49 U.S.C. 13908 specifically directs the Secretary to create and implement a unified on-line registration system that captures information about the identification, safety fitness, and financial responsibility of registered entities. Section 13908(c) grants the Secretary discretion to establish a fee system that covers the costs of this registration system.

In accordance with section 13908(c), FMCSA proposes separate fees to cover a number of distinct, but related, activities associated with registration. (The full breakout of proposed fees is discussed in the section entitled ''Regulatory Evaluation of the Unified Registration System (URS) NPRM: Summary of Benefits and Costs'' and in the full Regulatory Evaluation that has been placed in the public docket.) The principle underlying the assignment of

the proposed user fees is that the users would pay only for costs that they incur.

F. Registration Fees

Currently, non-exempt for-hire motor carriers, freight forwarders and brokers initially seeking operating authority under 49 U.S.C. chapter 139 pay a $300 filing fee. However, private carriers and exempt for-hire carriers are not subject to a filing fee when requesting a USDOT Number under 49 CFR part 390. As proposed in this NPRM, all entities under FMCSA jurisdiction would pay a $200 registration fee at the time the application is filed.

G. General Fee Policy Changes and Revised Fees

In addition to the $200 initial registration fees, FMCSA is proposing changes to a number of other licensing and insurance fees. The section in this notice entitled ''Regulatory Evaluation of the Unified Registration System (URS) NPRM: Summary of Benefits and Costs'' includes a detailed explanation and complete list of the proposed licensing and insurance filing fee changes.

FMCSA has changed the fee scale in various ways in an effort to administer system costs more equitably among users. Certain fees would be entirely eliminated. Currently, for example, carriers that are subject to chapter 139 registration requirements must pay a $14 fee for name change requests. Yet private and exempt for-hire carriers that are not subject to chapter 139 registration requirements are not charged for making name changes. Under this proposal, the name change fee would be eliminated for all registrants.

Other fees would change and be made applicable to a broader scope of carriers. Currently, only those carriers that are subject to the chapter 139 registration requirements must pay an $80 fee to reinstate operating authority that has been revoked (voluntarily or involuntarily). FMCSA proposes to increase to $100 the reinstatement fee for chapter 139 registrants. Additionally, a reinstatement fee would be made applicable to private and exempt for-hire motor carriers. If a private or exempt for-hire motor carrier failed to comply with financial responsibility or process agent filing requirements, FMCSA would de-activate its USDOT Number and charge a $100 reinstatement fee to reactivate the USDOT Number. The $100 fee would compensate the agency for expenses related to processing reinstatement requests.

Based on our experience in reinstating chapter 139 operating authority, the reinstatement process often involves substantial FMCSA staff time. Usually, the carriers have to be contacted several times before the appropriate information is obtained to conclude the reinstatement process. We believe the same would be true for private and exempt for-hire carriers seeking reinstatement.

H. Financial Responsibility

1. Bodily Injury and Property Damage Insurance (BI&PD) Requirement

The Motor Carrier Act of 1980 [Pub. L. 96–296, 94 Stat. 820] prescribed for safety reasons minimum levels of financial responsibility for certain motor carrier classifications. The motor carrier classifications include: For-hire interstate motor carriers of property in vehicles with a gross vehicle weight rating (GVWR) in excess of 10,000 lbs. (including ICC-exempt); private and for-hire interstate motor carriers of certain hazardous materials; and interstate and intrastate carriers of hazardous materials in bulk. In 1982, the Bus Regulatory Reform Act of 1982 [Pub. L. 97–261, 96 Stat. 1120] granted FMCSA (then FHWA) authority to regulate the levels of financial responsibility covering for-hire motor carriers of passengers operating in interstate commerce. These carriers are not currently required to provide proof of insurance or other financial responsibility as a condition for receiving a USDOT Number. Instead, FMCSA verifies financial responsibility as a part of its compliance review process. The actual review of financial responsibility requires that an enforcement official ensure that there is at the motor carrier's place of business a valid endorsement (Form MCS–90 or Form MCS–82), or valid authorization to self-insure that indicates that the carrier possesses the required financial responsibility coverage meeting the minimum prescribed limits.

For-hire motor carriers, brokers and freight forwarders that are subject to the chapter 139 registration requirements must file evidence of BI&PD insurance with FMCSA on prescribed forms as a precondition to receiving and holding authorities and permits. Their financial responsibility requirements take the form of certificates of insurance, surety bonds, proof of qualifications as a self-insurer, endorsements, or trust agreements.

FMCSA proposes at § 360.9 to continue the filing requirement for these carriers and extend its applicability to exempt for-hire motor carriers, including passenger carriers, and private interstate motor carriers transporting hazardous materials. These carriers are already required by statute (49 U.S.C. 31138 and 31139) and regulations (49 CFR part 387) to obtain and maintain BI&PD insurance. This rule would merely require the filing of evidence of financial responsibility with FMCSA.

Motor carriers transporting hazardous materials in intrastate commerce are similarly required by statute and regulations to obtain and maintain BI&PD insurance. The requirement to file evidence of financial responsibility with FMCSA would not extend to them. They would continue to maintain proof of the required financial responsibility at the motor carrier's principal place of business as required under 49 CFR 387.7(d)(1).

The proposed filing requirement would provide the public with assurances that all for-hire motor carriers, and private carriers transporting hazardous materials in interstate commerce, have the financial means to compensate members of the public for injuries or damages caused by their negligence. These filings would also increase public accessibility to insurance information and would enable FMCSA to more effectively track insurance cancellations. Under the current system, FMCSA receives a notice of cancellation only if the carrier is registered under chapter 139. A carrier not subject to the chapter 139 requirements could lose its insurance coverage, but FMCSA would generally not be made aware unless the fact was discovered during a compliance review of the carrier. The proposed extension of the BI&PD insurance filing to all carriers subject to the Motor Carrier Act of 1980 and Bus Regulatory Reform Act of 1982 insurance requirements would, therefore, better enable FMCSA to identify and bring into compliance uninsured motor carriers or remove them from the public highways.

2. Cargo Insurance Requirement

Title 49 U.S.C. 13906(a)(3) authorizes the Secretary to require motor carriers to file evidence of cargo insurance to cover loss or damage to property transported by them. Under current 49 CFR 387.303(c), non-exempt for-hire common carriers of property and freight forwarders are required to maintain cargo insurance of $5,000 per vehicle, and $10,000 per occurrence, and file evidence of this insurance with FMCSA. Under the proposed revised § 387.303(c), FMCSA would require only motor carriers and freight forwarders engaged in transportation of household goods to maintain and file

evidence of cargo insurance with the agency. Penalties for failure to comply would remain the same.

There does not appear to be a need to require non-exempt for-hire motor carriers of property to maintain cargo insurance since these carriers typically have cargo insurance well above FMCSA limits because their shipper clients generally require it as a condition of doing business. Where motor carriers of property and freight forwarders deal directly with individual members of the public, such as in the transportation of household goods, the agency believes it is in the public interest to continue to require cargo insurance. FMCSA has found that shippers of household goods tend to be less knowledgeable about the regulations than most shippers of other types of property, and therefore need the protection afforded by the current regulatory scheme. Therefore, FMCSA proposes to retain the requirement that household goods carriers and freight forwarders of household goods obtain and file minimum levels of cargo insurance, as provided by part 387. FMCSA requests comments about its proposal to eliminate the cargo insurance requirement for non-exempt for-hire carriers of property and freight forwarders.

3. Insurance Filings by Insurers, Surety Companies and Financial Institutions

FMCSA proposes to require all insurers, surety companies, and financial institutions to file evidence of insurance using the web-based (HTML) format. FMCSA currently accepts insurance filings in three formats: paper filings, electronic (ASCII) filings, and web-based (HTML) filings. The current paper-based insurance system is very labor intensive.

On August 15, 2001, FMCSA began allowing Internet filings. FMCSA also allows the public to access carrier licensing and insurance information through the Internet by selecting keyword ''L&I System'' at *http://www.fmcsa.dot.gov.*

With the implementation of the registration and financial responsibility filing requirements of 49 U.S.C. 13906 and 13908, FMCSA will have the capability and financial resources to improve the accuracy and timeliness of insurance application processing.

Accordingly, FMCSA proposes to require all carriers, property brokers, and freight forwarders subject to 49 CFR part 387 to have their insurers use Internet filings to file the necessary evidence of surety bonds, trust fund agreements, bodily injury and property damage insurance, household goods cargo insurance, and notices of cancellations. We believe web-based filings will promote efficiencies for FMCSA, insurers, sureties, financial institutions, and the public. FMCSA seeks comment on whether the proposed mandatory web-based filing would be a significant burden on small insurers, surety companies, and financial institutions. FMCSA also invites comments, ideas and suggestions regarding a potential phase-in approach as opposed to immediate mandatory on-line filing. FMCSA invites comments on any anticipated hardships that mandatory on-line filing may cause.

4. Self-Insurance

Existing regulations provide a motor carrier with the option to meet its financial responsibility obligations through self-insurance, but only with FMCSA approval following review of the carrier's financial health and safety rating. Risks for which a carrier may self-insure include bodily injury and property damage liability (BI&PD), as well as cargo liability. The self-insurance program is specifically authorized by statute (49 U.S.C. 13906, 31138, and 31139), and is also apparently beneficial to the industry. Comments filed in response to FMCSA's (then FHWA) August 26, 1996 Unified Registration System ANPRM strongly favored retaining the self-insurance program.

On May 5, 1999, FMCSA separately proposed procedural changes to the self-insurance process for for-hire motor carriers (see *Qualifications of Motor Carriers to Self-Insure Their Operations and Fees to Support the Approval and Compliance Process* at 66 FR 24123). Specifically, FMCSA would have reevaluated the security and collateral requirements of any self-insured carrier that fails to generate from operations, after payment of all expenses except annual self-insurance claims expenses, twice the level of cash needed to pay the self-insurance claims. An additional application fee of $2,500 would be assessed to cover carrier requests for any modifications and alterations to self-insurance authorizations that required a reevaluation of the carrier's financial condition. FMCSA had also proposed to reduce the fee for processing the initial application for authority to self-insure from $4,200 to $3,000 for an economic cost savings of $1,200. The NPRM proposed implementing additional procedures necessary for motor carriers to establish billing accounts to pay all insurance-related fees required by the agency. Finally, a carrier would be charged a fee to cover FMCSA's cost for analyzing quarterly and annual reports to monitor the carrier's ongoing financial health and claims history. A carrier would be charged a single annual fee of $2,600 to file four quarterly reports and its annual report.

FMCSA received a total of 12 comments in response to the 1999 NPRM. None of the commenters agreed with the proposed self-insurance fees. They believed the proposed fees were unreasonable and that the agency had not provided adequate information to justify the proposed fees. Some made the point that most participants in the self-insurance program are part of carrier groups and that assessing fees based on individual carriers would be burdensome. Commenters also stated it would be unfair to impose additional reporting requirements for all self-insured carriers. Some recommended that the additional reporting requirements should apply only to those self-insured motor carriers that the agency identified as having specific financial problems.

Because the issue of self-insurance falls within the scope of financial responsibility, and the financial responsibility information system is one of the four systems being merged into the proposed new Unified Registration System, FMCSA believes it is prudent to consider revisions to the self-insurance regulations within the context of the Unified Registration System. Therefore, the agency will withdraw the 1999 self-insurance NPRM in a separate withdrawal notice. The self-insurance issues set forth in the 1999 NPRM and public comments regarding that action are being addressed in today's proposed action.

Today's action would rescind the 1999 proposal that FMCSA use only the criteria that self-insured carriers must generate, after certain expenses, twice the level of cash needed to pay self-insurance claims when determining whether a carrier would become subject to adjustments in collateral or security requirements. The proposal was in response to agency concerns that the public be adequately protected against uncompensated losses.

The process of demonstrating whether a carrier has established and will maintain an insurance program that will protect the public as effectively as commercial coverage is complex. It is based upon a wide range of variables that do not conform to a one-size-fits-all standard. The 1999 proposed standard did not in itself take into account other aspects of a carrier's financial condition that are traditionally used to determine a company's financial strength. FMCSA now believes it should continue its current practice of adjusting collateral

and security requirements on a case-by-case basis.

Likewise, the agency would not impose a fee for a request to modify one's self-insurance authorization if the request resulted in the need to reevaluate the carrier's financial condition. FMCSA now recognizes such requests are rare (less than two requests per year).

FMCSA currently approves individual, and not group (also known as ''self-insurance pools'') self-insurance requests. That policy would remain unchanged under this proposal.

Current procedures require all motor carriers approved to self-insure against BI&PD and cargo liability to file four quarterly reports and one annual report per year. (Under this proposal, only motor carriers and freight forwarders of household goods would retain the cargo insurance filing requirement. FMCSA seeks comment on whether to continue the option of self-insuring for cargo insurance.) FMCSA uses these quarterly and annual reports to monitor the financial health of self-insured carriers and ensure that each motor carrier continues to meet the financial requirements of the program. The quarterly reports are due within 60 days of the end of the quarter and generally must cover the periods defined in Table 1:

TABLE 1

Quarter	Period covered
1	January 1–March 31.
2	April 1–June 30.
3	July 1–September 30.
4	October 1–December 31.

The annual report is a summary of information included in the four preceding quarterly reports, and is due not later than 90 days after the end of each annual reporting year (December 31) or the end of March.

FMCSA proposes changes to self-insurance quarterly and annual report filing fees, as authorized under 49 U.S.C. 13908(c). Self-insured carriers would be assessed $500 for each quarterly report filing. There would be no fee for filing the annual report. The annual cost for these filings would total $2,000, a $600 reduction from the 1999 NPRM proposal of $2,600.

In developing the new fees for quarterly filings, the agency consulted the private contractor that reviews the quarterly reports on behalf of the agency, The Meridian Group. Data submitted by The Meridian Group indicates that the contractor incurs an average of $520 in costs to review each simple quarterly report filing. (Rounding to the nearest $50 in accordance with existing § 360.5, FMCSA adjusted the cost to $500) The proposed $500 fee would assist in recouping labor costs associated with reviewing the quarterly filings. The agency proposes no fees for annual report filings.

Currently, the self-insurance program is not self-supporting but is subsidized by other licensing fees. The proposal to retain the $4,200 initial application fee and to assess a new quarterly filing fee would bring the program closer to the goal of being entirely self-supporting. The Regulatory Evaluation for this rule provides a more detailed explanation to support fees regarding self-insurance. FMCSA seeks comment regarding these proposed self-insurance fees.

Finally, the 1999 proposal to require additional procedures for motor carriers to establish billing accounts to pay all insurance-related fees required by FMCSA would be superceded by procedures under subpart E to 49 CFR part 360 in this proposal.

I. Designation of Process Agents

Today's action proposes to include private and exempt for-hire motor carriers among those that must file process agent information with FMCSA.

Current regulations require only those entities that must register under chapter 139 to designate a process agent by filing Form BOC–3—Designation of Agents—Motor Carriers, Brokers and Freight Forwarders with FMCSA. Chapter 139 registrants generally include non-exempt for-hire motor carriers, property brokers and freight forwarders. A motor carrier (including a private carrier) that operates in the United States in the course of transportation between points in a foreign country must also file the BOC–3. Motor carriers, property brokers and freight forwarders may only change the designation of process agent by filing a new designation with FMCSA. This requirement ensures a valid, up-to-date designation is on file at all times during which an entity is subject to, in whole or in part, the designation requirement under § 360.605.

A carrier may use a commercial or blanket service of process agent company or it may designate an individual employee or relative who resides in the State(s) in which the carrier operates to serve as its process agent. The process agent must be U.S.-domiciled. If a State official is designated, evidence of the official's willingness to serve as process agent must be provided to FMCSA.

Today's action retains the requirement for the fiduciary of a motor carrier, property broker or freight forwarder to designate a process agent as of the moment of succession. Title 49 CFR 387.319(a) defines a fiduciary as ''any person authorized by law to collect and preserve property of incapacitated, financially disabled, bankrupt, or deceased holders of operating rights and assignees of such holders.''

FMCSA provides public access to process agent information on the Internet and by telephone. The public uses the information when seeking compensation for losses resulting from a crash involving a commercial motor vehicle. The information enables them to serve lawsuits on the correct party in any State in which the motor carrier, broker or freight forwarder operates. FMCSA uses the information to serve notices for enforcement actions such as out-of-service orders and other administrative proceedings.

Pursuant to 49 U.S.C. 503, FMCSA is empowered to also require private carriers to designate process agents and to file those designations with the Secretary of Transportation. It was not until the publication of the August 26, 1996 ANPRM that the agency asked whether all private carriers should be compelled to make such filings. Commenters urged that private and exempt for-hire motor carriers be subject to the same process agent filing requirements as non-exempt for-hire motor carriers, brokers and freight forwarders.

Based upon those comments, FMCSA proposes to maintain the current requirements in effect for designation of process agents and to extend them to private and exempt for-hire motor carriers.

J. Administrative Filings

FMCSA further proposes to increase to 90 days the maximum time allowed an applicant to submit proof of insurance and process agents before its application is dismissed. Under existing procedures, an applicant is allotted 20 days from the application date to complete the filings. If the filings are not made within 20 days, the agency may grant one 60-day grace period before taking action. As a result, applicants may be given up to 80 days to satisfy insurance and process agent filing requirements.

FMCSA believes that a 90-day filing period for these administrative filings more realistically reflects the actual time necessary to arrange insurance and process agent coverage. Therefore, this NPRM would require the administrative filings within 90 days after submission

of the Form MCSA–1, with no further grace periods. If either the insurance or process agent filings were not completed within this 90-day period, the agency would dismiss the registration request. FMCSA requests comments on the proposed 90-day time frame for making administrative filings.

In addition, FMCSA proposes that any registered entities that are not presently required to file evidence of insurance or designation of process agent be allowed 180 days from the date the final rule takes effect to make the required filings. For example, exempt for-hire carriers and private interstate motor carriers transporting hazardous materials are already required to maintain minimum levels of financial responsibility, but they have not been required to file evidence of that coverage with FMCSA. Many registered carriers have never been required to file a designation of agent for service of process. This proposal would provide these entities 180 days after the rule becomes final to make the filings. If registered entities failed to make the required filings timely, their registration would be revoked.

The extended insurance filing period for existing motor carriers would have no bearing on revocation procedures for lapses in insurance coverage. Insurance companies only report lapses in coverage for motor carriers for which they have already made insurance filings. Carriers impacted by the 180-day extension would have never had evidence of financial responsibility filed on their behalf.

FMCSA believes this extended grace period would enable the agency to efficiently process the anticipated 300,000+ filings in this category as well as provide registrants with adequate time to comply with the new filing requirements.

K. Cancellation and Reinstatement of USDOT Numbers

Under existing procedures, if a motor carrier whose operations are authorized under chapter 139 wishes to voluntarily cancel its operating authority, it must submit a notarized Form OCE–46—Voluntary Revocation Request or electronically file its request. Although not required, many of these carriers use the Form OCE–46 to notify the agency that they are ceasing operations. FMCSA proposes to replace the voluntary revocation request procedure with the simpler procedure now used by motor carriers requesting to discontinue use of a USDOT Number. Carriers would be required to mail or electronically submit to FMCSA a cancellation request and certification statement under § 360.701. Use of the Form OCE–46 and its associated complex processing requirements would be discontinued.

Proposed § 360.705 clarifies that FMCSA would deactivate a carrier's USDOT Number if it fails to comply with the financial responsibility and process agent filing requirements. A carrier may not operate in interstate commerce without an active USDOT Number. Under proposed § 360.707, carriers may reactivate their USDOT Numbers within 2 years of being marked inactive by making the necessary filings, paying a reactivation fee, and re-completing the requirements of the New Entrant Safety Assurance Program (unless they have previously completed the new entrant requirements). FMCSA believes carriers that have been inactive for more than 2 years are functionally equivalent to new entrants and should be required to demonstrate that they have the necessary basic safety management controls in place before being allowed to resume interstate operations. Therefore, we propose requiring such carriers to file Form MCSA–1 to reactivate the previously-issued USDOT Number and complete the new entrant safety assurance program in part 385. We invite comments on whether the 2-year threshold for re-completing the New Entrant Safety Assurance Program is appropriate or if it should be lowered.

L. The New Application Form

FMCSA proposes to combine the data elements now captured on several different licensing, registration and certification forms into a single, new application form called the Form MCSA–1—FMCSA Registration Form (USDOT Number Application). The Form MCSA–1 would replace the forms and certifications listed below:

1. Motor Carrier Identification Report (Application for USDOT Number), Form MCS–150;
2. Application for Motor Property Carrier and Broker Authority, Form OP–1;
3. Application for Motor Passenger Carrier Authority, Form OP–1(P);
4. Application for Freight Forwarder Authority, Form OP–1(FF);
5. Safety Certification for Applications for USDOT Number, Form MCS–150A; and
6. Application for Mexican Certificate of Registration for Foreign Motor Carriers and Foreign Motor Private Carriers Under 49 U.S.C. 13902, Form OP–2.

Proposed Form MCSA–1 is included as an appendix to this preamble for public review and comment. The proposed form would capture all of the information and certifications required under relevant statutes, including ICCTA and MCSIA. The agency believes that use of one comprehensive form would streamline the application process and reduce the paperwork burden for all affected entities. Every motor carrier, freight forwarder or broker required to register with DOT under 49 CFR 390.19 or 49 U.S.C. 13901, except Mexico-domiciled motor carriers registering to operate between Mexico and points in the United States beyond border commercial zones along the U.S.-Mexico international border, would use the same proposed form to register with FMCSA.

The proposed form has eliminated fields that captured duplicative information common to the applications for operating authority and the motor carrier identification report. This would reduce the preparation time for those entities that were required to complete both forms. Additionally, FMCSA has attempted to group similar information requests and categories within the same sections on the proposed form. Further, the form is designed to have applicants complete only those areas of the form that are relevant to the type of operation for which they would register. For example, certain applicants are instructed to skip safety-related questions and other sections that do not apply to them.

Comments submitted to the ANPRM suggested that FMCSA, when considering any new registration system, collect only information necessary to ensure public safety. FMCSA believes that it is necessary to include on the proposed Form MCSA–1 fields regarding the identification of carrier and cargo classification type. Capturing this information would continue to benefit Federal and State regulatory agencies, as well as other interested parties, and allow tracking of trends among various transportation categories and cargo classification types. Tracking industry trends and practices would continue to aid in the design of better driver and vehicle safety-related programs. Therefore, this proposal retains motor carrier designation and cargo type categories that are currently included on the OP–1, OP–2, and MCS–150 forms.

The MCSA–1 would solicit certain revenue data about applicants. FMCSA and the Bureau of Transportation Statistics (BTS) have discussed the benefits of collecting revenue data from registrants. Each believes that collecting gross annual operating revenue on the same form as safety and equipment data would allow analyses of safety/financial inter-relationships and improve

compliance rates for requirements of both agencies. For example, MCSA–1 revenue data would provide the first public sector financial data on new carriers that are not yet subject to FMCSA financial reporting regulations (formerly BTS) (49 CFR part 1420). Broad revenue data would help FMCSA gain a better understanding of distribution of the motor carrier industry by revenue size, particularly the number of small entities within the industry. Such information would help the agency to more effectively evaluate the impacts of its regulations on small carriers, and provide the basis for studying the relationship between financial performance and safety performance within the industry.

In view of congressional and agency concerns regarding transportation of household goods, FMCSA has also proposed including on the new MCSA–1 information under the Household Goods Arbitration section of the current OP–1 form. That form requires household goods applicants to provide information regarding their program for arbitrating loss and damage claims and to certify that their tariffs are available for review upon request. The agency believes that this would continue to provide important information for assisting consumers with household goods movement complaints.

Under this proposal, FMCSA plans to design, integrate and implement information systems and technology that would allow real time processing of registration applications. FMCSA and its predecessor agencies have routinely made motor carrier safety-related information available to the general public, as well as other regulatory agencies. FMCSA collects and maintains information on interstate motor carriers, vehicles and drivers. Four basic types of information are collected: Census information that identifies and describes each motor carrier operation; safety inspection records conducted on carrier vehicles and drivers; crash reports; and records of administrative and judicial enforcement actions. These data are maintained by FMCSA on the following systems:

- Motor Carrier Management Information System (MCMIS). MCMIS is FMCSA's central repository for safety data on motor carriers, vehicles, and drivers.
- Licensing and Insurance System (L&I). The L&I system is FMCSA's system for issuing carrier operating authority, recording insurance coverage, and maintaining process agents.
- Motor Carrier Safety Status Measurement System (SafeStat). SafeStat, a FMCSA safety-performance indexing algorithm, uses data from MCMIS records to score and rank motor carriers by their safety performance as a pointer system for enforcement.
- Safety and Fitness Electronic Records System (SAFER). SAFER is FMCSA's safety data exchange system. It provides snapshots of a motor carrier's safety performance, registration, and permit status, and provides a platform for the exchange of these data between Federal and State agencies.

FMCSA plans to continue working closely with its Federal, State and local partners to ensure that all carrier registration and safety information databases and systems are integrated to the greatest extent possible. FMCSA intends to design a system that utilizes one web portal with links to other FMCSA databases, as suggested by many of the comments to the ANPRM. The agency believes this would reduce the aggregate cost of operating these systems, increase their value in saving lives and reducing injuries, and facilitate access by interested parties.

M. Multi-Phase Application Process

Under the proposed new requirements, an applicant would request an application package by accessing the FMCSA website, *http://www.fmcsa.dot.gov,* or by contacting FMCSA headquarters or Division offices located in each State by mail, fax or telephone. FMCSA strongly recommends that applicants use the electronic on-line application procedure since it has built-in edit checks and quick lists for easy, accurate completion. The proposed application package would include the following:

1. Educational and technical assistance material regarding the safety and operational requirements of the FMCSRs and the HMRs, if applicable.
2. Application form MCSA–1, along with instructions.

The educational and technical assistance package would consist of material designed to assist the applicant in complying with the FMCSRs and HMRs, if applicable, and in establishing good safety management practices. It would include information on driver qualifications; controlled substances and alcohol use testing; commercial driver licenses; minimum levels of financial responsibility; crash reports; requirements applicable to the driving of motor vehicles; vehicle inspection, repair and maintenance; hours of service and records of duty status of drivers; and requirements applicable to the transportation of hazardous materials.

After FMCSA receives an MCSA–1 application, it would process the application in multiple phases. Step one would involve initial screening of the application. FMCSA would assign a temporary number to track the application through the registration process. The applicant's insurer, surety company, or financial institution would use the tracking number to file evidence of financial responsibility that must accompany the application. An applicant's process service agent would use the number to make Form BOC–3 (designation of process agent) filings. FMCSA would review the application for completeness and accuracy; ensure that financial responsibility and process agent filings are received in a timely manner; and make necessary non-material corrections. If the application is rejected during this stage, the registration filing fees would not be refunded. The agency would not refund registration fees under any circumstances.

If a motor carrier's application passed the initial screening, it would enter step two—provisional registration. FMCSA would issue provisional registration and assign a USDOT Number. A motor carrier applicant would not be allowed to begin operations until FMCSA had granted provisional registration.

Under the proposed process, registration for non-Mexico-domiciled carriers would only become permanent if the applicant satisfactorily completes the new entrant safety assurance process set forth in 49 CFR part 385. The agency announced the new entrant safety assurance process in an Interim final rule (IFR) on May 13, 2002 (at 67 FR 31978, titled *New Entrant Safety Assurance Process.* The new entrant safety assurance process implements section 210 of MCSIA by requiring new entrants to successfully complete a safety review within 18 months after receiving their USDOT Numbers.

Registrations for Mexico-domiciled motor carriers operating exclusively within the border commercial zones are not subject to the new entrant safety assurance process but must satisfactorily complete the safety monitoring system codified at 49 CFR 385.101 *et seq.*

The special procedures under step two(a) of the multi-phase application process would delay the issuance of a provisional registration to motor carriers that are subject to the protest provisions under U.S.C. 13902. Section 13902 requires FMCSA to allow a time period for persons to oppose an application for registration. FMCSA would publish notification of the registration application in the on-line FMCSA

Register. Anyone may protest the application for registration, provided the protest is based upon the applicant's failure to comply with: (1) The registration procedures; (2) applicable DOT regulations, including the FMCSRs and the HMRs; (3) the safety fitness standards; and/or (4) financial responsibility requirements.

Freight forwarders and brokers are not issued provisional registration. If their registration application is not successfully opposed, their registration is permanent when FMCSA issues it at the conclusion of the publication and protest process.

Section 13902 does not authorize anyone to protest the registration application of a Mexico-domiciled motor carrier seeking to operate only within the border commercial zones, exempt for-hire motor carriers, or private motor carriers. For this reason, step two(a) would not apply to these carrier types. FMCSA would not entertain protests against their registration applications or publish notification of them in the FMCSA Register.

In step three, FMCSA would issue permanent registration if the motor carrier had successfully completed the applicable monitoring program and the registration application was not successfully opposed.

FMCSA seeks comment regarding the proposed form and registration process discussed in this NPRM.

VII. Special Transit Operation Provisions

ICCTA amended the financial responsibility provisions of 49 U.S.C. 31138(e) by adding a new subsection (4). This provision applies to passenger service provided within a transit service area under an agreement with a Federal, State, or local government, funded, in whole or in part, with a grant under 49 U.S.C. 5307, 5310, or 5311. Where the transit service area is located in more than one State, in lieu of the minimum Federal levels of financial responsibility required of motor passenger carrier registrants generally, such transit operators (hereinafter identified as ''Federal Transit Administration (FTA) grantees'' or ''transit service providers'') are permitted to maintain as their minimum financial responsibility obligation the highest level of insurance required by any of the States in which they operate.

FTA grantees operating in interstate transit service areas that exceed commercial zone limits generally provide service of a nature that does not conform with any of the statutory exemptions that might otherwise remove carriers from FMCSA jurisdiction and, thus, relieve them of registration obligations—such as the commercial zone exemption of 49 U.S.C. 13506(b)(1), the ''casual, occasional, or reciprocal'' transportation exemption of 49 U.S.C. 13506(b)(2), or the taxicab exemption of 49 U.S.C. 13506(a)(2). In addition, FTA grantees are advised that there are no exemptions from registration requirements related to vehicle capacity, frequency of interstate operations, or the non-profit status of a transportation operation.

Further, FMCSA believes that no meaningful relief from statutory registration requirements can be made available to FTA grantees under the general exemption authority of 49 U.S.C. 13541. The statute expressly constrains the Secretary from exercising that exemption authority to relieve a person from the application of, and compliance with, any law or regulation pertaining to specified matters including insurance and safety fitness—matters integral to the registration process.

ICCTA amendment to 49 U.S.C. 31138(e) only adjusted the minimum financial responsibility levels FTA grantees are required to observe. It did not relieve FTA grantees with interstate transit service areas of their obligation to register with FMCSA as required of all interstate for-hire carriers under 49 U.S.C. 13902. Similarly, ICCTA amendment did not relieve FTA grantees of their obligation under 49 U.S.C. 13906 to file with FMCSA evidence of insurance under 49 CFR part 387 as a condition of registration. However, this proposal would waive the otherwise applicable $200 registration and $10 financial responsibility filing fees for such applicants. These applicants would also be eligible to apply to self-insure their operations, and the fees for such applications would be waived as well.

Accordingly, FTA grantees that provide interstate service within areas that exceed commercial zone limits are required to register their operations with FMCSA and, as part of that process, to file evidence that they maintain the minimum levels of financial responsibility coverage required under 49 U.S.C. 31138(e). This notice proposes to amend the 49 CFR part 387 regulations governing minimum levels of financial responsibility for motor carriers to reflect the revised compliance option made available by ICCTA to transit service providers.

VIII. Systems Under Consideration for Merger With the New Unified Registration System

A. Registration for Certain Mexico-Domiciled Motor Carriers

Today's notice requests comment on whether the proposed unified registration system should include the registration process for Mexico-domiciled motor carriers seeking to operate between Mexico and points in the United States beyond the border commercial zones along the United States-Mexico international border. The agency announced the registration process for this group of motor carriers in a March 19, 2002, interim final rule (IFR) (see *Application by Certain Mexico-Domiciled Motor Carriers to Operate Beyond United States Municipalities and Commercial Zones on the United States-Mexico Border* at 67 FR 12702). Regulations governing the registration process for this group of motor carriers are published in Subpart E of 49 CFR part 365. The process includes requirements applicable only to Mexico-domiciled carriers seeking authority to operate between Mexico and points in the United States beyond the border commercial zones along the United States-Mexico international border. FMCSA seeks comment on whether the unique conditions related to these carriers warrant retaining a separate registration procedure and application form for them.

The unique registration requirements arise from Section 350 of the 2002 DOT Appropriations Act (the Act), Public Law 107–87. In effect, Section 350 prohibits the Secretary of Transportation from obligating or expending funds for reviewing or processing applications of Mexico-domiciled motor carriers to transport property or passengers in interstate commerce between Mexico and points in the United States beyond the municipalities and commercial zones along the United States-Mexico international border until the DOT satisfies conditions imposed by Section 350. FMCSA satisfied part of Section 350 by incorporating registration requirements prescribed by the section into its regulations published in the 2002 IFR and companion rules published concurrently with the 2002 IFR. Among other things, these carriers:

- Are uniquely required to successfully complete a preauthorization safety audit (PASA) encompassing the nine areas of inquiry required by section 350(a)(1)(B) prior to being granted operating authority;

• Must be assigned a distinctive U.S. DOT Number in accordance with section 350(a)(4); and

• Must provide proof of valid insurance issued by an insurance company licensed in the United States before being granted authority to operate beyond the border commercial zones, in accordance with 350(a)(8)

Additional conditions apply to Mexico-domiciled carriers that have had operating authority for less than three consecutive years. In accordance with section 350(a)(5), each of their commercial motor vehicles that do not display a valid Commercial Vehicle Safety Alliance (CVSA) inspection decal issued by a CVSA-certified inspector must successfully pass a Level 1 inspection. Each vehicle must display a valid CVSA decal as evidence of having met the inspection criteria, and the vehicles must be re-inspected every three months by a CVSA-certified inspector.

The agency is exploring the possibility of bringing this group of Mexico-domiciled motor carriers under the Unified Registration System and requests public comment on whether to proceed.

Several changes would result from merging their registration system under the Unified Registration System. The MCSA–1 would replace the OP–1(MX) as the registration application form. These carriers would provide additional identifying information and certifications. The proposed Form MCSA–1 captures approximately 22 additional new or modified items of information relating to the operation type, form of business, revenue, contact information, and certifications that are not on the Form OP–1(MX): FMCSA estimates these fields would increase the paperwork burden for these carriers. Any changes in the paperwork burden or costs and benefits would be reflected in the final rule's supporting documentation. For a detailed discussion of the information collection burdens associated with the OP–1(MX), see the May 19, 2002 IFR.

Additional impacts to these carriers would include a modified application process. They would be subject to the proposed multi-phase application process which involves the assignment of a temporary tracking number in lieu of a USDOT Number until certain conditions are met. Unlike other applicants, a Mexico-domiciled carrier seeking to operate in the United States beyond the border commercial zones would additionally need to successfully complete a PASA before receiving a USDOT Number. FMCSA would need to incorporate consideration of the PASA results as well as its associated due process procedures into the Unified Registration System.

Under the Unified Registration System the initial registration fee would decrease from $300 to $200. Form OP–1(MX) filers now have multiple options for payment of fees, including checks and money orders. The only approved payment methods for the initial registration and administrative filing fees under the Unified Registration System would be approved credit cards, electronic funds transfers, and charge cards.

FMCSA specifically invites comment on these and other potential impacts, whether FMCSA should incorporate the OP–1(MX) registration with the Unified Registration System and, if so, how the agency can most effectively integrate the two systems.

B. Hazardous Materials Safety Permit Application Process

On June 30, 2004, FMCSA published a final rule requiring any carrier that desires to haul certain high-hazard materials in interstate or intrastate commerce to obtain a hazardous materials safety permit (HM Safety Permit). (See *Federal Motor Carrier Safety Regulations: Hazardous Materials Safety Permits,* published at 69 FR 39350.) Applicants must complete the Form MCS–150B when initially applying for or renewing the HM Safety Permit under the biennial renewal process. For these carriers, the MCS–150B is submitted in lieu of the MCS–150 as the application for the USDOT Number.

Today's NPRM does not merge the HM Permitting Process under the Unified Registration System for two reasons: (1) Congress did not, under sec. 103 of the ICC Termination Act, specify the HM Safety Permitting Process as one of the systems for inclusion in the new on-line unified registration system; and (2) the final rule announcing the HM Safety Permitting Process was published after the URS NPRM was in the final stages of development. The agency is exploring the possibility of integrating the HM Safety Permitting Process with the Unified Registration System, however, and requests public comment on whether we should proceed.

The primary impact of merging the HM Safety Permitting Process under the Unified Registration System would be the modification of Form MCSA–1 to capture the data on the MCS–150B—which is identical to the MCS–150 with an additional six fields related to the permit program requirements. We believe incorporating the MCS–150B into the MCSA–1 would result in a small net efficiency in time and money. FMCSA estimates these fields would increase the paperwork burden for completing the MCSA–1 by six minutes. Any changes in the paperwork burden or costs and benefits would be reflected in the final rule's supporting documentation. For a detailed discussion of the information collection burdens associated with the MCS–150B, see the June 30, 2004 final rule.

Additional HM Safety Permitting Process components being considered for integration with the Unified Registration System include the HM permit suspension and revocation procedures; appeals process; and permit evidence requirements for the vehicle/shipping paper.

One particular challenge presented by integrating the HM Safety Permitting Process would involve the treatment of certain intrastate carriers. Intrastate carriers are not normally required to obtain a USDOT Number, and most of the FMCSRs do not apply to intrastate carriers. However, the HM Safety Permitting Process regulations were promulgated under hazardous materials statutes (49 U.S.C. 5105(e), 5109, and 5113) and apply to both interstate and intrastate haulers of high-hazard materials. The June 30 final rule specifies a carrier must have a ''Satisfactory'' safety rating to qualify for the HM Safety Permit. This means that, in order to procure an HM Safety Permit, intrastate carriers must now obtain a USDOT Number and submit to a compliance review. The USDOT Number ensures that such carriers are targeted for a compliance review. The compliance review is solely for the purpose of obtaining a safety rating to qualify for an HM Safety Permit and is based upon the HMRs and FMCSR-compatible State regulations.

Other than the requirement to obtain a USDOT Number and pass a compliance review, the additional proposed provisions under the URS NPRM that do not already apply to intrastate carriers would continue to not apply if HM Safety Permitting and the Unified Registration System were to be integrated. Examples of URS NPRM provisions that would not apply to intrastate carriers include the requirement to file evidence of financial responsibility with FMCSA or to designate a process agent.

FMCSA specifically invites comments on whether it should incorporate the HM Safety Permitting Process with the Unified Registration System and, if so, how the agency can most effectively integrate the two systems.

C. Hazardous Materials Cargo Tank Registration Process

On April 18, 2003, the Research and Special Programs Administration (RSPA) published a final rule titled, *Hazardous Materials: Requirements for Cargo Tanks* at 68 FR 19258. Among other things, RSPA's rule transferred to FMCSA responsibility for administering the Cargo Tank Registration Program for all persons who are engaged in the manufacture, assembly, inspection and testing, certification, or repair of a cargo tank or a cargo tank motor vehicle manufactured in accordance with a DOT specification under 49 CFR parts 100 to 185 or under terms of an exemption issued under 49 CFR part 107 (see 49 CFR 107.502(d)). Facility applicants applying for a new Cargo Tank (CT) number must complete the registration statement when initially registering with the Department. For facilities currently registered with the Department, this process is used to add facility locations or to update registration statements as required by 49 CFR 107.504(c). Facility applicants submit the MCS–150 to obtain a USDOT Number which is used only for tracking purposes in MCMIS.

Today's NPRM does not merge the Cargo Tank Registration Program with the Unified Registration System for two reasons: (1) Congress did not, under sec. 103 of the ICC Termination Act, specify the Cargo Tank Registration Process as one of the systems for inclusion in the new on-line unified registration system; and (2) the final rule transferring the Cargo Tank Registration program from RSPA to FMCSA was published after the URS NPRM was in the final stages of development. The agency is nonetheless exploring the possibility of integrating the Cargo Tank Registration Process with the Unified Registration System and requests public comment on whether, and if so how, we should proceed.

Except for the requirement to obtain a USDOT Number, the URS NPRM is not expected to increase the regulatory requirements already applicable to cargo tank facilities. Examples of URS NPRM provisions that would not apply to cargo tank facilities include the requirement to file evidence of financial responsibility with FMCSA or (for U.S. residents) to designate a process agent. Persons who are not residents of the United States are still required in accordance with 49 CFR 107.107 to designate a permanent resident of the United States as their agent for service of process.

FMCSA specifically invites comments on incorporating the Cargo Tank Registration Process into the Unified Registration System and on the best method of integrating the two systems.

IX. Performance and Registration Information Systems Management Program (PRISM)

The PRISM program is a priority FMCSA initiative comprised of two major processes: (1) The Motor Carrier Safety Improvement Process (MCSIP) and (2) the Commercial Vehicle Registration Process. These processes work in parallel to identify motor carriers and hold them responsible for the safety of their operation. The performance of unsafe carriers is improved through a comprehensive system of identification, education, awareness, safety monitoring and treatment.

FMCSA provides grants to approved States. As of September 2004, 37 States have entered into grant agreements with FMCSA to implement PRISM. At least 19 of these States are currently collecting MCS–150 Forms and issuing USDOT Numbers to interstate motor carriers.

The PRISM program uses MCSIP to hold motor carriers responsible for the safety of their operations. The MCSIP is designed to improve the safety performance of motor carriers with demonstrated poor safety performance through accurate identification, performance monitoring, and interventions such as on-site compliance reviews at a motor carrier's principal place of business. MCSIP carriers that do not improve their safety performance face progressively more stringent penalties that may result in a Federal Operations Out-of-Service Order and possible concurrent suspension or denial of vehicle registration privileges by the State.

A State's International Registration Plan commercial vehicle registration process provides the framework for the PRISM program and serves two vital functions. First, it establishes a system of accountability by ensuring that no vehicle receives license plates without the identification of the carrier responsible for the safety of the vehicle during the registration year. Second, the use of registration sanctions serves as a powerful incentive for unsafe carriers to improve their safety performance.

The commercial vehicle registration process of PRISM creates a new Federal-State partnership that improves safety and strengthens Congressionally-mandated enforcement policies such as those related to the consequences of unsatisfactory safety ratings (Section 4009 of TEA–21), failure to pay civil penalties (Section 206 of the MCSIA of 1999) and biennial data update requirements (Section 217 of the MCSIA of 1999). One of the fundamental tenets of the PRISM program is that State vehicle registration agencies will:

- Suspend a motor carrier's International Registration Plan (IRP) license plates in conjunction with an FMCSA order to cease interstate operation; and/or
- Deny renewal of IRP license plates to any motor carrier that is prohibited from operating in interstate commerce by FMCSA.

Additionally the commercial vehicle registration process of PRISM allows participating States to check motor carriers' MCS–150 ''date of last update'' in FMCSA information systems as part of their annual IRP license plate renewal processes. If the motor carrier's MCS–150 data (census data) is more than 24 months old before the end of the license plate registration period, the State requires them to update this data as a condition for receiving their IRP license plate. This approach ensures that motor carriers who obtain IRP license plates in PRISM states cannot let their census data expire. The FMSCA has determined that motor carriers who update their census data in this manner already meet the periodic filing requirement of the current 49 CFR 390.19 and would require no additional filing with FMCSA. However, they would be subject to the penalties for filing false or misleading information (see proposed § 360.25(a)(4)). For clarification purposes, the data contained on the MCS–150 would now be incorporated into the new MCSA–1.

States participating in the PRISM program also routinely issue USDOT Numbers to interstate motor carriers who do not have them as part of their commercial vehicle registration processes. This, in essence, has allowed participating States to serve as a one-stop shop where motor carriers could receive a USDOT Number, apply for or renew IRP license plates, and meet the biennial data updating requirements.

Under this proposed rule, carriers are required to file an MCSA–1 prior to receiving a U.S. DOT number. FMCSA cannot delegate to PRISM States its responsibility to ensure that the MCSA–1 Form is correct and complete, and otherwise consistent with our safety fitness policy. States will, however, be able to issue USDOT Numbers to ''registrants'' (such as leasing companies) and intrastate carriers. Therefore, we are particularly interested in comments from States now participating in the PRISM program regarding the impact of the inability to continue issuing USDOT Numbers to

interstate motor carriers concurrently with the commercial vehicle registration process.

FMCSA invites comments and questions on anticipated impacts of this rule.

X. Regulatory Evaluation of the Unified Registration System (URS) NPRM: Summary of Benefits and Costs

A. Background and Summary

FMCSA has determined that this NPRM constitutes a significant regulatory action as defined under section 3(f)(3) of Executive Order 12866 and under Department of Transportation policies and procedures. While the costs of this NPRM do not exceed the $100 million annual threshold as defined in Executive Order 12866, it is expected to generate extensive public interest.

Section 103 of ICCTA, as codified at 49 U.S.C. 13908, directs the Secretary of Transportation to issue a rule to replace four systems with a ''single, on-line, Federal system.'' Title 49 U.S.C. 13908(c) provides the Secretary the option of establishing a fee system for registration and filing of evidence of financial responsibility, and states that, ''Fees collected under the fee system shall cover the costs of operating and upgrading the registration system, including all personnel costs associated with the system.'' Several fee changes are identified in the discussion below and are proposed with the goal of ensuring that the ''single, on-line, Federal (registration) system'' will be self-sustaining. Additionally, since 49 U.S.C. 13908 directs the Secretary to create a single unified system, we propose several changes to the registration requirements for certain segments of the motor carrier population (such as exempt for-hire carriers) in an attempt to harmonize the registration process for all types of motor carriers.

The major proposed URS NPRM provisions for which direct costs have been estimated include:

- Requiring private and exempt for-hire motor carriers to pay the same FMCSA registration fee as that paid by non-exempt for-hire carriers;
- Requiring private and exempt for-hire motor carriers to file proof of process agent designation with FMCSA;
- Requiring insurance representatives of exempt for-hire carriers and insurers of private interstate carriers of hazardous materials to file proof of liability insurance with FMCSA;
- Requiring private and exempt for-hire carriers to file reinstatement requests with FMCSA;
- Eliminating the ability of motor carriers to transfer operating authority; and
- Cost to industry from revising other motor carrier filing fees. Direct benefits of this NPRM include:
- Time savings to industry and FMCSA personnel resulting from streamlining the motor carrier registration process;
- Time savings to FMCSA in locating and serving private and exempt for-hire motor carriers for compliance and other reviews as a result of the process agent designation filing;
- Additional crashes avoided as a result of FMCSA being able to conduct additional compliance reviews annually due to time saved in searching for, locating, and serving private and exempt for-hire motor carriers for reviews; and
- Time savings to the industry's insurance representatives from eliminating cargo insurance filing requirements for common carriers and freight forwarders of non-household goods.

A summary of the costs and benefits associated with this NPRM are presented in Table 2.

TABLE 2.—SUMMARY OF 10-YEAR COSTS AND BENEFITS OF THE URS NPRM

[In millions of discounted dollars]

	Costs	Benefits	Net direct benefit (benefits—costs)
Total	$75.4	$91.4	$16

Total discounted costs of this proposed rule equal $75.4 million over the 10-year analysis period. Total discounted benefits of this proposed rule equal $91.4 million over 10 years, resulting in net discounted benefits of $16 million. The detailed costs and benefits associated with this NPRM are discussed in the next two sections, respectively.

B. Costs

The categories of costs are summarized in Table 3.

TABLE 3.—COSTS OF URS NPRM BY MAJOR PROVISION

[Millions of discounted dollars]

URS provision or proposed change	First-year costs	Total 10-year discounted costs
New Registration Fees	$1.5	$11.6
Filing Proof of Process Agent Designation	20.5	47.1
Filing Proof of Liability Insurance	1.5	4.5
Filing Reinstatement Requests	0.4	4.4
Eliminating Transfers of Operating Authority	0.7	6.9
Revising Other FMCSA Fees	0.08	0.9
Total Discounted Costs	24.7	75.4

Note: Subtotals may not add exactly to totals due to rounding.

The present value of total costs resulting from this NPRM is estimated to be $75.4 million for the 10-year analysis period. All dollar figures were discounted using a discount rate of 7 percent, based on Office of Management and Budget guidelines. The following discussion represents a summary of calculations performed for the benefit-cost analysis. A full discussion of the data used, assumptions made, and calculations performed can be found in the stand-alone regulatory evaluation (Preliminary Regulatory Evaluation: Unified Registration System (URS) Notice of Proposed Rulemaking (NPRM)) contained in the public docket for this rule.

1. New Registration Fees for Private and Exempt For-Hire Carriers

Under the current registration system, a carrier's operating status, such as non-exempt for-hire, exempt for-hire, or private, determines what specific forms that carrier must file with FMCSA and what specific fees, if any, are paid. For example, new entrants registering as non-exempt for-hire motor carriers must now file an OP series form (Application for Motor Carrier and Broker Authority), an MCS–150 form (Motor Carrier Identification Report), and an MCS–150A form (Safety Certification) and pay a $300 registration fee. Conversely, private and exempt for-hire carriers file only the MCS–150 and MCS–150A forms and pay no fee.

Under the new registration system, all new entrants, including all non-exempt for-hire, exempt for-hire, and private motor carriers, as well as brokers and freight forwarders, would be required to file the new MCSA–1 form (which combines most elements of the OP series, MCS–150, and MCS–150A forms), and all would be assessed a $200 registration fee. This revised fee would reduce by $100 the registration costs of non-exempt for-hire motor carriers, brokers and freight forwarders. At the same time, it would increase by $200 the registration costs of private, exempt for-hire, and other new entrant carriers, such as private passenger (non-business) carriers, private carriers of migrant workers by motor vehicle, and various government entities.

Data from FMCSA Office of Information Management indicate that the number of new entrants applying for operating authority or a USDOT Number with FMCSA averaged 47,535 annually between the years 1995 and 2002. Further details on the breakdown of these numbers appear in Table 4.

TABLE 4.—AVERAGE ANNUAL NUMBER OF NEW ENTRANTS BY OPERATION CLASSIFICATION, 1995–2002

Operation classification	Number (average per year)	Percent of total
Non-exempt For-Hire	23,440	49
Exempt For-Hire	3,758	8
Private (Property & Passengers (business))	16,551	35
Other (includes private passenger carriers (non-business) and various government entities)	664	1
Mexico-domiciled (commercial zone & long-haul) [1]	1,200	3
Brokers, Freight Forwarders	1,922	4
Total	47,535	100

Source: Motor Carrier Management Information System (MCMIS) and Licensing and Insurance System (L&I), 1995–2002 data.
[1] Represents projected estimate of number of Mexico-domiciled new entrant applicants based on 2003 data.

Examining the numbers in Table 4, a total of 20,973 new entrants (Exempt For-Hire + Private + Other) would each see their registration fee increase from no fee to $200. Conversely, 26,562 new entrants (non-exempt for-hire carriers, Mexico-domiciled carriers, and brokers/freight forwarders) would each see their registration fee reduced from $300 to $200. Combining these two offsetting effects, the net regulatory cost of revising the new entrant registration fee would be $1.5 million annually. Over the 10-year analysis period, the total discounted cost of this provision would be $11.6 million, using a seven percent annual discount rate and assuming an average annual growth rate of seven percent for the industry.

A special note is required here regarding how we arrived at the proposed $200 registration fee for all new entrants. Projected fiscal year 2005 (FY05) personnel and support costs (including labor, and direct/indirect operations support) to implement and manage the new licensing and registration system proposed here were estimated at $9.7 million. This total represents the projected FMCSA personnel and related costs to handle, review, and process new entrant applications, as well as to initiate follow-up phone calls with new entrants in those cases where additional information is needed to process the application. Dividing this number ($9.7 million) by our estimate of the average annual number of new entrants (47,535) results in an average registration cost per applicant of $204 per filing. Rounding to the nearest $50, in accordance with proposed § 360.5 regulations addressing the rounding of FMCSA fees, we arrive at a registration fee of $200 per new entrant. It should be noted here that these costs were not included in the FY05 FMCSA information systems budget request developed by the FMCSA Information Management and Budget Offices, since the agency intends to cover these personnel costs through the revenues it collects from new entrant registration fees.

As discussed earlier in this evaluation, guidance regarding fee levels for the new registration system is provided by 49 U.S.C. 13908, which indicates that the Secretary may assess a fee to cover all costs associated with upgrading and operating the registration system. Additionally, guidance provided by the Office of Management and Budget Circular A–25, ''User Charges,'' is consistent in this regard, since it states that ''each service, sale or use of Government goods or resources provided by an agency to specific recipients be self-sustaining.''

2. New Process Agent Filings Required by FMCSA

Currently, non-exempt for-hire carriers are required to verify that they have designated a process agent for those States in which they intend to operate. There is currently no charge to file this form (known as a ''BOC–3'' form) with FMCSA. This NPRM proposes to extend this filing requirement to private and exempt for-hire carriers, and proposes to begin charging a fee of $10 per filing. In 2005, this provision would affect approximately 20,000 exempt for-hire and private new entrants and 319,000

existing carriers. Since no existing exempt for-hire or private carrier has been required in the past to file proof of process agent designation with FMCSA, we assume all would file such proof in the first year of the rule's implementation period. Although the process agent designation form is generally a one-time filing, we would expect some existing carriers to re-file this form with FMCSA in any given year because of changes in their operations (*i.e.*, changing process agents, business address, etc.). And current regulations (49 CFR parts 365 and 368) require motor carriers to notify FMCSA within 45 days of a change or correction in their process agent designation filing. As such, in future years we estimate that this provision would affect approximately 20,000 new entrants and 10 percent of the carriers who initially filed in calendar year (CY) 2005. In CY 2006, 10 percent of this motor carrier population would equal 34,100, if we assume an average annual industry growth rate of seven percent (*i.e.*, 31,900 * 1.07 = 34,100).

Compliance costs associated with this provision include: (1) The opportunity (time) cost for a private or exempt for-hire motor carrier to contact and secure the services of a process agent (we assumed that none has yet secured such services and that it would take 30 minutes per carrier to do so, at an average wage rate of $19.32/hour), (2) the $40 service fee charged to these carriers by the process agents, and (3) the $10 fee assessed by FMCSA to file a process agent designation form. If we multiply the above three cost elements by the number of new entrant and existing motor carriers affected by this provision in each year and sum the results, it yields total first-year compliance costs of $20.5 million. Total discounted costs over the 2005–2014 analysis period equal $47.1 million.

3. New Requirement and Fee for Insurance Representatives of Exempt For-Hire Carriers and Private Carriers of Hazardous Materials To File Proof of Liability Insurance

This provision would require insurance representatives of exempt for-hire and private motor carriers of hazardous materials (hazmat) to file proof of liability insurance with FMCSA. These carriers are currently required by statute (49 U.S.C. 31138 and 31139) to hold such insurance, but FMCSA has not required their insurance representatives to file proof of that insurance with the agency. In 2005, this provision would affect almost 5,400 new entrants and 106,000 existing exempt for-hire and private hazmat carriers (and/or their insurance representatives), since we assume all affected existing carriers would comply with the new requirement in the first year. In later years, this provision continues to affect almost 5,400 new entrants. However, it also affects 20 percent of the existing carriers (or 22,700 carriers in CY2006 when we assume an average annual industry growth rate of seven percent), since we anticipate that the new insurance representatives for this percentage of existing carriers would re-file the carriers' liability insurance each year based on changes in insurance coverage such as a change in insurance carriers. Compliance costs include: (1) The cost of the $10 filing fee to insurance representatives for exempt for-hire and private hazmat carriers who would now be required to file proof of liability insurance with FMCSA, (2) the opportunity (time) costs of 10 minutes per filing to each insurance representative of the carrier to file proof of liability insurance with FMCSA (at an average hourly wage rate of $19.32), and (3) the time and filing costs (10 minutes and $10 per filing, respectively) to insurance representatives of those existing motor carriers which change insurance companies in a given year and must re-file.

If we multiply the above three cost elements by the number of new entrant and existing motor carriers affected by this provision in each year and sum the results, it yields a total first-year cost of $1.5 million (after rounding). Total discounted costs over the entire 2005–2014 analysis period amount to $4.5 million.

4. New Requirement and Fee for Private Hazmat and Exempt For-Hire Carriers To File Reinstatement Requests

When a new entrant for-hire motor carrier or other applicant initially registers with FMCSA, the applicant or its insurance company must also file proof of liability insurance with the agency. Upon completion of the initial registration and insurance filing requirements, the carrier obtains an ''active'' status with FMCSA. In order to remain ''active'' in the agency's database, the carrier or its insurance company must file updates with FMCSA when elements of the insurance coverage change, such as when a motor carrier changes insurance companies for cost or other reason. If the carrier or its insurance company does not file these updates with FMCSA within the allowable time period, the carrier's status changes from ''active'' to ''inactive'' and it must apply for reinstatement with FMCSA. The reinstatement fee is currently $80, although FMCSA proposes to increase it to $100 with implementation of this rule. All revenue derived from insurance filing fees would be dedicated to supporting the operations of the system, thereby allowing it to operate in a self-sufficient manner. The projected fiscal year 2005 operating expenses for the Enforcement Compliance Division that would be covered via fee revenues are estimated at $3.5 million (including labor, and direct/indirect operations support).

In 2002, three percent of non-exempt for-hire motor carriers (or almost 6,500 of 215,000) filed reinstatement requests with FMCSA. With implementation of this proposal, the agency expects this number to increase because exempt for-hire and private hazmat carriers would be required to file proof of liability insurance with FMCSA. Assuming the same percentage of exempt for-hire and private hazmat carriers would file for reinstatement in a typical year as non-exempt for-hire carriers currently do (3 percent), FMCSA could expect an additional 2,900 reinstatement requests annually in 2005 (3 percent of 98,000 such carriers expected to be operating in 2005).

Each of these carriers could be expected to spend an average of 10 minutes filing a reinstatement request with FMCSA. At $19.32/hour and 2,900 applicable carriers, the filing time costs would total less than $10,000 in 2005. Additionally, each of these carriers would be required to pay a $100 filing fee, which given 2,900 carriers in 2005, would equal $290,000 in 2005.

Regarding non-exempt for-hire carriers, who are currently required to file reinstatement requests with FMCSA at $80 per filing, the agency projects that there would be more than 7,000 reinstatement requests filed in 2005 (assuming an average annual growth rate of seven percent in the existing non-exempt for-hire carrier population). With a $20 increase in their reinstatement filing fee, costs would total $140,000 in 2005. Totaling the three aforementioned sets of costs (the exempt for-hire, private hazmat, and non-exempt for-hire carriers) yields approximately $440,000 in first-year costs for this provision. Over the entire 10-year analysis period, where FMCSA assumes the carrier population increases at an average of seven percent annually, total discounted costs of this provision would be $4.4 million.

5. Eliminating Transfers of Operating Authority

Under this proposed rule, motor carrier requests for transfers of operating

authority would no longer be permitted. As such, the motor carrier to whom the operating authority is to be transferred would be considered a new entrant from the perspective of FMCSA, requiring that carrier to obtain a new USDOT Number. Also, more importantly, the owner of this new USDOT Number is considered a new entrant, and thereby subject to a new entrant safety audit. The primary costs associated with this proposed change in FMCSA policy include: (1) The time and fee associated with filing an MCSA–1 form with FMCSA; and (2) the costs associated with conducting and participating in an FMCSA new entrant safety audit. These costs are discussed below.

According to the FMCSA Licensing Team, there were 621 requests for transfers of operating authority filed with FMCSA in 2002. Each of the carriers to whom operating authority was transferred paid a $300 fee to FMCSA. Given that such transfers would no longer be permitted under this proposal, these carriers would have to file with FMCSA as new entrants (including filing an MCSA–1 form). Therefore, each carrier would save $100 in filing fees under this proposed rule (or the difference between the current $300 fee to file transfers of operating authority and the proposed $200 new entrant filing fee discussed earlier in this rule). However, as estimated earlier, filing an MCSA–1 form with FMCSA also requires approximately 2 hours of labor time for each carrier (or their staff) to actually fill out the form. Using a fully-loaded wage rate of $19.20 per hour (as used earlier is this evaluation), each carrier would incur $38.40 in filing costs for the new MCSA–1 form. As such, the net savings in fees and filing costs to each carrier as a result of this proposal is $61.60 (or $300 minus $238.40). Multiplying this estimate ($61.60 of cost savings per carrier) by the number of carriers who requested such transfers in 2002 (621 carriers) yields a first-year cost savings of almost $40,000.

However, the above cost savings would be offset (and then some) by the requirements associated with being designated a new entrant, namely the costs of a new entrant safety audit. The regulatory impact analysis prepared for the New Entrant Safety Assurance Process final Rule (*New Entrant Safety Assurance Process Interim Final Rule,* Docket No. FMCSA–2001–11061, May 13, 2002) contained an estimate of the total agency cost to conduct each new entrant safety audit. The average cost was estimated to be $1,100, and represented the costs to the agency (*i.e.*, FMCSA or state) to conduct the audit, including 12 hours of labor time preparing for, conducting, and reviewing the results of the audit as well as average travel costs per audit. Using an average hourly wage of $19.20 (as discussed earlier) and assuming each carrier spends an average of four hours at an audit, total costs for a motor carrier to participate in an audit equal $76.80 (or $19.20 * 4 hours). Adding up these costs yields an average total cost per new entrant safety audit of $1,176.80. Multiplying this estimate by the number of requests for transfers of operating authority (621) yields a total first-year cost of $730,793 to conduct the additional new entrant safety audits resulting from this proposed policy change. Deducting the cost savings associated with the differences in filing fees and other costs discussed earlier (equal to almost $40,000 in the first year), the total first-year cost is equal to $0.7 million (after rounding). Total discounted costs associated with this proposal over the 10-year analysis period are equal to $6.9 million, using a seven-percent discount rate as prescribed by OMB and assuming an average annual growth rate in the industry of seven percent.

6. Revising Other FMCSA Fees

In addition to those fee changes discussed earlier in this analysis, FMCSA proposes to revise three of the fees it currently charges to motor carriers for individual services or filing requirements. These revisions include (1) instituting a fee of $500 to review/approve each quarterly report filed by participants of the FMCSA Liability Self-Insurance Program, and (2) eliminating the $14 fee assessed to non-exempt for-hire motor carriers and others that change their business names. Only the fees that FMCSA currently assesses for these services would change under this proposal. No other changes regarding these services, such as which entities are required to file, are being proposed.

Adding up the new costs for self insurance quarterly report filing and the net cost savings associated with the fee reduction for name changes yields a net cost savings of less than $0.1 million (undiscounted) in the first year of this proposal. Full details regarding the offsetting effects of these fee changes are contained in the stand-alone regulatory evaluation contained in the docket. Total net discounted cost savings associated with these proposed fee changes discussed above would equal $0.9 million over the entire 10-year analysis period.

7. Total Costs of URS NPRM

Adding up all of the costs from the four URS provisions discussed above yields a total discounted cost of $75.4 million over the 10-year analysis period. Sixty-two percent of these costs (or $47.1 million) are due to the proposed provision that requires exempt for-hire and private motor carriers to secure and file a designation of process agent form with FMCSA. The other proposed provisions would raise the total discounted cost only by an additional $28.3 million combined.

As noted earlier in this document, FMCSA considered merging the registration-related elements of the Application Process for Certain Mexico-Domiciled Carriers rule, HM Permitting rule and the HM Cargo Tank Registration rule into this notice (For details on those rules, see *Application by Certain Mexico-Domiciled Motor Carriers to Operate Beyond United States Municipalities and Commercial Zones on the United States-Mexico Border* published at 67 FR 12702; *Federal Motor Carrier Safety Regulations: Hazardous Materials Safety Permits,* published at 69 FR 39350, and *Hazardous Materials: Requirements for Cargo Tanks,* published at 68 FR 19258). As part of that consideration, FMCSA analysts reviewed the regulatory impact analyses developed for each of those final rules. And while the agency is soliciting public comments on this integration, we made the determination that the costs associated with those three rules should not be included in this regulatory evaluation. This decision was based on two factors. First, detailed regulatory impact analyses were developed independently for each of those rules, and the compliance costs associated with each were fully documented and published. To include those costs as part of this regulatory impact analysis would constitute ''double counting'' the costs associated with those rules. Secondly, as noted earlier in this document, FMCSA analysts anticipate that the integration of the registration processes associated with those three rules into the system envisioned under the Unified Registration System would result in costs savings by way of economies of scale. However, the anticipated cost savings were deemed to be relatively modest, based on the relatively small number of entities affected by each of those rules. As such, while we recognize potential cost savings from a full integration, the results are not quantified here, since their anticipated impact to this rule's total costs and benefits was deemed to be relatively

insignificant and the option still remains to be evaluated, based upon public comment to this notice.

The next section discusses the societal benefits expected from implementation of this proposal.

C. Benefits

The major categories of estimated benefits resulting from this NPRM are summarized in Table 5.

TABLE 5.—BENEFITS OF THE URS NPRM

[Millions of discounted dollars]

Provision/proposed change	First-year benefits	Total discounted 10-year benefits
Streamlining the Registration Process [1]	$0.7	$5.2
Filing Proof of Process Agent Designation [2]	8.3	82.6
Eliminating Cargo Insurance Filings [3]	0.4	3.6
Total Discounted Benefits:	9.3	91.4

Note: Subtotals may not add exactly to totals due to rounding.
[1] Time savings incurred by new entrants.
[2] Safety benefits in the form of large truck crashes avoided.
[3] Time savings incurred by new entrants and existing carriers who otherwise may have re-filed these forms periodically.

Total first-year benefits of this proposal would be $9.3 million (discounted), while total discounted benefits are estimated at $91.4 million over the 10-year analysis period. Benefits from this proposed rule include crash-related benefits from avoided crashes as well as time/cost savings, the latter being associated with a reduced filing burden and/or reduced FMCSA fees paid by motor carriers.

1. Cost Savings From Streamlined New Entrant Registration Process

With this NPRM, FMCSA registration process would be streamlined by merging the OP series form with the MCS–150, and MCS–150A forms, yielding the single MCSA–1 application form. With the new, combined form, less information would be required of most applicants, since previously redundant information would be eliminated following the merger of the forms. Additionally, more detailed instructions would be provided to steer applicants through the form more efficiently. FMCSA estimates the average time saved per filer would be 30 minutes.

Using an average hourly wage rate of $19.32 for a motor carrier, an estimate of 47,535 new entrants in 2005, and average time savings of 30 minutes per applicant, the first year cost savings associated with this provision would be a little less than $0.5 million. Additionally, the time saved by FMCSA employees to process the filings would be expected to average 10 minutes per filing. Using a fully-loaded average hourly wage rate of $29.05 for FMCSA staff and an estimated 47,535 new entrants filing annually, the first-year cost savings to FMCSA would be approximately $0.2 million.

Total first-year cost savings would equal $0.7 million, while total discounted cost savings over the 10-year analysis period would equal $5.2 million.

2. Safety Benefits From Process Agent Designation Filing Requirement

Currently, non-exempt for-hire motor carriers are required to verify with FMCSA that they have designated a process agent in each State in which they intend to operate and to identify those process agents via a filing with FMCSA (known as a ''BOC–3'' form). Under this NPRM, private and exempt for-hire carriers would be required to file the same form with FMCSA. Such a filing improves the transparency of these carriers' operations to the driving public, should they seek to obtain redress from the carrier in the event of a crash involving a commercial motor vehicle. (Currently, the public has on-line access to such information for non-exempt for-hire motor carriers.) Additionally, such a filing would allow FMCSA to more efficiently locate motor carriers upon whom they wish to conduct compliance reviews or take other enforcement actions. Specifically, under this proposed rule, FMCSA safety investigators will be able to work through the process agent if necessary to locate or serve the motor carrier in question. FMCSA division administrators have long expressed frustration with their inability to efficiently locate particular small and medium-sized private and exempt for-hire motor carriers for enforcement action. Several FMCSA division administrators have indicated that their staff can spend twenty or more hours on occasion attempting to track down a private or exempt for-hire motor carrier for enforcement action, including repeated telephone calls, Internet searches, and multiple visits to the place of business, only to find out the carrier has moved, or no one is home (these businesses are frequently operated out of private homes). In some cases, FMCSA field staff eventually locates the motor carrier and conducts the review. In others, field staff is forced to move on to other cases, where the probability of a quick and successful resolution is much higher (currently, there are more opportunities to conduct reviews than there are FMCSA staff resources to initiate them).

With the new process agent designation filing requirement for private and exempt motor carriers, FMCSA division administrators expect to save a significant number of hours in staff search costs to locate carriers for compliance and other types of reviews. FMCSA expects this provision to result in efficiency and safety benefits. FMCSA division administrators have indicated that this requirement would reduce the average amount of search time spent on each compliance review, thereby resulting in extra time within each calendar year to conduct additional compliance reviews. As a result, the agency anticipates a direct safety benefit to accrue from implementation of this provision.

In discussions with several FMCSA division administrators, the number of cases where the field staff had trouble locating a motor carrier against whom they wished to take enforcement action ranged from 10 to 100 cases per division in 2003, with the majority indicating less than 25 cases per year. For this analysis, we assumed that each division office would eliminate excessive carrier search costs in 20 enforcement cases per

year, or slightly less than 10 percent of the average 216 reviews conducted by each FMCSA division office in calendar year 2002. Given that private and exempt for-hire carriers represent 43 percent of new entrants to the industry, and 54 percent of the existing motor carrier industry, we felt that this assumption was reasonable.

Also, discussions with FMCSA division administrators indicated that field staff spend an average of 10 to 20 hours per case in search costs trying to track down these ''hard to find'' carriers. For this analysis, we took the midpoint and assumed that FMCSA field staff would save an average of 15 hours in staff search costs per case where the carrier was difficult to locate. Multiplying the average hours per case (15) with the average number of ''hard to find'' cases per division per year (20), yields a total of 300 hours of staff time saved per year per division. With an FMCSA division office located within each of the 50 states, we estimated that total time saved by all FMCSA division staff for these ''hard to find'' carriers at roughly 15,000 hours per year (we did not include the District of Columbia and Puerto Rico due to the relatively limited number of reviews they conduct each year). Given that FMCSA division staff spend an average of 21 hours to prepare for, conduct, and complete each compliance review (according to unpublished FMCSA research on the Federal compliance review process), we anticipate that this proposed rule would generate enough time savings to conduct an additional 714 compliance reviews annually, or roughly 6.5 percent of the total 10,802 reviews conducted by the 50 State-based FMCSA division offices in fiscal year 2002.

To estimate the impact of the Compliance Review (CR) Program on motor carrier safety, FMCSA completed a CR program assessment in 2003 with the John A. Volpe National Transportation Systems Center.[3] In 2002, 1,600 truck-related crashes were avoided as a result of the 8,924 CRs conducted in 2001. In 2001, 2,200 truck-related crashes were avoided as a result of the 11,340 CRs conducted in 2000. Summing the number of CRs conducted between 1998 and 2001, and dividing by the summation of crashes avoided in each year yields an average of 0.1847 truck-related crashes avoided per CR conducted between 1998 and 2001. It should be noted that the above estimate represents just the direct crash-reduction benefit associated with a CR, not the deterrent effect (such as the ''threat'' of receiving a CR). As such, this crash-reduction benefit estimate of a CR can be considered conservative, in the sense that we believe the benefit is higher but were not able to quantify the indirect, or deterrent effect of CRs (even though such an effect has been documented in research studying the effects of increased penalties and public awareness campaigns on the incidence of drunk driving). If we multiply our crash reduction estimate per CR (0.1847) by the number of new compliance reviews we estimate the agency would be able to conduct each year because of the time savings benefits of this provision (714), we find that this proposal has the potential to reduce truck-related crashes by 132 each year. At an average cost per truck-related crash of $62,613 in 2003 dollars[4], this provision yields crash-reduction benefits of $8.3 million annually (undiscounted). Total discounted crash-reduction benefits of this provision equal $82.6 million over the 10-year analysis period, when an average 7-percent industry growth rate is assumed (as was assumed for all other provisions analyzed in this regulatory evaluation).

It must be noted here that the average annual industry growth rate assumed for this analysis (7 percent) is based on the average number of new entrant applications filed with FMCSA over an 8-year period (1995–2002). To estimate the safety benefits of the process agent designation filing requirement discussed above, we assumed a corresponding 7-percent annual increase in the number of carriers deemed high risk (or those targeted for an on-site (*i.e.*, compliance) review of the carrier's operations), and by implication, a comparable increase in the percentage of hard-to-locate carriers. As such, a 7-percent annual increase in industry participants, and particularly high-risk carriers, is assumed to result in a comparable increase in truck-related crashes, absent the beneficial effects of implementing the process agent designation filing requirement.

3. Cost Savings From Eliminating Cargo Insurance Filing Requirement

All non-exempt for-hire common carriers and freight forwarders are currently required to hold cargo insurance up to a limit of $5,000 per vehicle and $10,000 per occurrence. Under this proposed rule, these groups, excluding those associated with household goods transportation, would not be required to hold or file proof of cargo insurance with FMCSA through their insurance representatives. Practically speaking though, all these carriers would continue to hold cargo insurance since virtually all of their clients require such insurance as a prerequisite for doing business with a carrier.

In 2005, this provision affects approximately 9,600 new entrant non-exempt for-hire common carriers and freight forwarders, and 20,000 such existing entities, since the agency would expect that they would direct their insurance representative to re-file their cargo insurance with FMCSA in 2005. In future years, it would affect 9,600 new entrants, and 20 percent of existing carriers (or 21,700 in CY2006 assuming an average annual growth rate of seven percent), for whom FMCSA anticipates the new insurance representative would otherwise have to re-file their cargo insurance in each of the future years of this analysis. Cost savings would include: (1) Elimination of the $10 filing fee paid by the insurance representative for these new entrant carriers when filing proof of cargo insurance with FMCSA, (2) elimination of the filing time (10 minutes per form) that would otherwise have been required of these carriers insurance representatives (at an average hourly wage rate of $19.32), and (3) elimination of re-filings made by insurance representatives of existing for-hire common carriers which change insurance companies in a given year.

Multiplying the above three cost elements by the number of carriers affected and summing the result yields a total first-year cost savings of $0.4 million. Total discounted costs over the entire 10-year analysis period would be $3.6 million.

4. Total Benefits

Total first-year benefits of this proposal would be $9.3 million discounted dollars, while total discounted benefits would equal $91.4 million over the 10-year analysis period. All dollar figures were discounted using a discount rate of 7 percent in accordance with Office of Management and Budget guidelines.

6. Net Benefits From URS NPRM

Total discounted costs of this proposal were estimated to be $75.4 million over the 10-year analysis period. Total discounted benefits were estimated to be $91.4 million over this same period. The net discounted benefits associated with implementation are $16 million over the 10-year analysis

[3] ''FMCSA Safety Program Effectiveness Assessment: Compliance Review Program CR Impact Assessment Model, Results for 2001 and 2002 * * *'', May 2003.

[4] Average large truck crash costs were obtained from, ''Revised Costs of Large Truck- and Bus-involved Crashes'' by Zalonshja, Miller, and Spicer (2004 unpublished research for FMCSA).

period. FMCSA invites comments to the docket regarding these cost and benefit estimates and assumptions associated with them.

BILLING CODE 4910–EX–P

XI. Appendix to the Preamble—Proposed Form MCSA–1 and Instructions

U.S. Department Of Transportation Federal Motor Carrier Safety Administration	FMCSA REGISTRATION / UPDATE INSTRUCTIONS FORM MCSA-1

NOTE: Mexico-domiciled motor carriers that operate beyond United States municipalities and commercial zones on the United States-Mexico border should not complete this form. They should complete the OP-1(MX) and MCS-150.

THE FORM MCSA-1 HAS SEVEN SEPARATE REASONS FOR FILING AS FOLLOWS:

1. NEW REGISTRATION – TO REGISTER FOR THE FIRST TIME
2. REINSTATEMENT – TO RETURN A PRIOR REGISTRATION TO GOOD STANDING
3. NEW ENTRANT REAPPLICATION – TO REAPPLY AFTER YOUR NEW ENTRANT REGISTRATION HAS BEEN REVOKED (REAPPLY AFTER 30 DAYS)
4. BIENNIAL UPDATE – TO FILE THE UPDATE REQUIRED EVERY 24 MONTHS
5. NAME / ADDRESS CHANGE – TO FILE A CHANGE TO YOUR COMPANY'S NAME OR ADDRESS
6. OTHER UPDATE – TO FILE OTHER MISCELLANEOUS CHANGES
7. CANCELLATION – TO CANCEL USDOT REGISTRATION

FOR EACH REASON FOR FILING, COMPLETE THE APPROPRIATE SECTIONS OF THE MCSA-1 AS SHOWN IN THE TABLE ON PAGE 1 OF THE FORM

YOU SHOULD CONSULT THESE INSTRUCTIONS AS YOU COMPLETE THE MCSA-1

SUBMISSION

An applicant may submit its application to FMCSA headquarters by filing online at the FMCSA website (www.fmcsa.dot.gov) or by mail or express mail. FMCSA strongly recommends that applicants use the electronic on-line application procedure.

TELEPHONE ASSISTANCE

For additional assistance, or to obtain the status of an application, consult the FMCSA website, (www.fmcsa.dot.gov), call FMCSA Support Services at (800) 832-5660, or contact FMCSA Headquarters or State Division offices (See "Contacting Us" on the FMCSA website).

OVERVIEW OF THE SEVEN REASONS FOR FILING THE MCSA-1

EACH OF THE 7 REASONS FOR FILING IS DESCRIBED BELOW. *LINE-BY-LINE INSTRUCTIONS* BEGIN ON PAGE 3.

1. NEW REGISTRATION

There is a $200.00 fee for this transaction.
Check the "New Registration" box if you are a registering for the first time. The following entities must register:

- For-hire motor carriers of property, passengers and household goods.
- For-hire Mexico-domiciled motor carriers of property and household goods and private motor carriers that seek to operate within the commercial zones on the United States-Mexico Border. Under NAFTA Annex I, page I-U-20, a Mexico-domiciled carrier may not provide point-to-point transportation services, including express delivery services, within the United States for goods other than international cargo.
- U.S.-based enterprise motor carriers owned or controlled by Mexican nationals transporting passengers and/or international cargo (goods originating or terminating in a foreign country).
- Private motor carriers
- Property brokers of general freight and/or household goods
- Freight forwarders of general freight and/or household goods

Certain new applicants are also required to complete additional requirements described below:

- *Financial Responsibility*: New for-hire motor carriers of property and passengers, property brokers, freight forwarders and private carriers of hazardous materials must also demonstrate minimum financial responsibility for bodily injury and property damage (49 CFR Part 387). **You may not begin to operate until the required documents have been filed with FMCSA and your U.S. DOT Number has been issued.**

- *Household Goods*: New for-hire motor carriers of household goods and freight forwarders of household goods must comply with the minimum cargo insurance requirements as provided 49 CFR Part 387. **Operations may not begin until minimum cargo insurance requirements have been filed with FMCSA and your U.S. DOT Number has been issued.**

- *Designation of Agents for Service of Process*: If you are a new entity, you must submit a signed and dated Designation of Agents for Service of Process (Form BOC-3). It must include the street addresses (**not the post office box number**) of designated agents for service of process and administrative notices in connection with the enforcement of applicable Federal statutes or regulations. A person must be designated in each State in which the applicant expects to operate, even passing through. If you choose to use a Process Agent Service, you must submit a letter with your completed MCSA-1 informing the FMCSA of this decision. You must ensure that the Process Agent Service files the BOC-3 with FMCSA within 90 days of the date you file the MCSA-1. **You may not operate as a motor carrier until the BOC-3 has been filed with the FMCSA and your U.S. DOT Number has been issued.**

Certifications and Oaths. New entities must sign the completed certification statements and oaths, as follows:

ENTITY	PARTY WHO MUST SIGN
Sole proprietorship	Owner
Partnership	One partner
Corporation	An officer (President, Vice President, etc.)

2. REINSTATEMENT

There is a $100.00 fee for this transaction.
Check the "Reinstatement" box if you want to reinstate the registration of a motor carrier, freight forwarder, or broker that has been inactivated. Please be certain that all the requirements for operation have been met, including those pertaining to establishing a process agent and filing insurance.

3. NEW ENTRANT REAPPLICATION

There is no fee for this transaction.
A new entrant whose USDOT registration has been revoked and whose operations have been placed out of service (OOS) by the FMCSA may file **TO RE-APPLY** for USDOT Registration **NO SOONER THAN** 30 days after the date of revocation. If the motor carrier failed to schedule a safety audit, did not appear for a safety audit, or failed a safety audit and did not submit corrective actions, the motor carrier **MUST** start the process from the beginning and **MUST** demonstrate that it has corrected the deficiencies that resulted in revocation of its registration.

4. BIENNIAL UPDATE

There is no fee for this transaction.
Check the "Biennial Update" box if you hold a USDOT number and are making a biennial update in accordance with 49 CFR 390.19. The MCSA-1 is used for biennial updates every 24 months.
Mexico-domiciled motor carriers holding a Certificate of Registration from the former Interstate Commerce Commission, the Federal Highway Administration, the former Office of Motor Carrier Safety or the Federal Motor Carrier Safety Administration, that was issued before April 18, 2002 and which provides a territorial scope of operations between points in specified States or between points in the United States, must also file a biennial update in accordance with 49 CFR 390.19.

5. NAME/ADDRESS CHANGE

There is no fee for this transaction.
Check the "Name/Address Change" box to file changes to the legal name, DBA name, form of business, or address, provided that there is no change in the ownership, management or control. You must file within 20 days of the change.

If there is a change in ownership, management or control, you must file a new registration.

6. OTHER UPDATE

There is no fee for this transaction.
Check the "Other Update" box if you wish to update information on your registration, such as vehicle information, driver information, etc.

7. CANCELLATION
There is no fee for this transaction.
Check the "Cancellation" box if you hold a USDOT number and wish to voluntarily cancel your registration. You should complete Sections A & I only.

LINE-BY-LINE INSTRUCTIONS

- These instructions will assist you in completing the MCSA-1 accurately. An MCSA-1 that does not include required information or contains incorrect information will be rejected and will result in loss of fees.
- The application must be completed in English and typed or printed in ink. Pencil is not acceptable.
- If additional space is needed to respond to an item, please use a separate sheet of paper, identifying yourself and the section and page number of the MCSA-1 to which you are responding.
- You should retain a copy of the completed MCSA-1 and the instructions for your records.

SECTION A. BUSINESS DESCRIPTION *(TO BE COMPLETED BY ALL)*

Beginning on Page 2:

1. LEGAL NAME OF BUSINESS. Provide your full legal business name – the name of the sole proprietor, the name of all partners on the partnership agreement, or the complete name as it appears on the incorporation certificate. It is important to spell, punctuate and space accurately the words forming the name of your entity. For example, FMCSA regards each of the following as a separate entity: John Jones; Harry L. Jones & John Jones; John Jones Trucking, Inc.

2. "DOING BUSINESS AS" (D/B/A) NAME. If the applicant uses a "trade name" that differs from its legal business name as shown in block 1, that name should be entered. Only one trade name is permitted. Example: If the applicant is "John Jones," doing business as "Quick Way Trucking," "John Jones" should be entered as the "Legal Name of Business," and "Quick Way Trucking" should be entered as the "Doing Business As" name. If you do not have a trade name, leave this item blank.

3. PRINCIPAL PLACE OF BUSINESS ADDRESS. Enter the physical address where the principal place of business is located (not the address of a terminal). Use the two-letter postal abbreviation for the State or Canadian Province/Territory. If the applicant is domiciled in Mexico, enter the "Colonia" or "Barrio" where the principal place of business is located. Post office boxes are <u>not</u> acceptable.

4. MAILING ADDRESS. If applicant receives mail at an address other than the principal place of business address given, please provide it. Example: P. O. Box 3721. If your mailing address is the same as your principal place of business address, check the box.

NOTE: You must give the Federal Motor Carrier Safety Administration written notice within 20 days of any change in your business or mailing address. You do this by following the directions for "Name/Address Change" and filing the completed MCSA-1 with FMCSA. This will ensure that you receive notices from FMCSA, and will ensure that documents filed on your behalf are included as part of your file.

MEXICO-DOMICILED MOTOR CARRIERS – If you are a Mexico-domiciled motor carrier and also maintain an office in the United States, that information should also be provided as part of question number 29 of the MCSA-1.

5. COUNTRY OF DOMICILE OF PRINCIPAL PLACE OF BUSINESS. The applicant should indicate the country in which its principal place of business is located. Check the appropriate box and include the RFC number (company in Mexico), NSC number(s) (company in Canada) or country name, as applicable. If you have more than one NSC number, attach a separate sheet with the additional numbers.

6. PRINCIPAL BUSINESS TELEPHONE NUMBER. Enter the principal telephone number, including area code, of the principal place of business. Please include your country code if you are not domiciled in the United States.

7. PRINCIPAL BUSINESS FAX NUMBER (optional). Enter the principal fax number, including area code, of the principal place of business. Please include your country code if you are not domiciled in the United States.

8. PRINCIPAL BUSINESS CELL PHONE NUMBER (optional). Enter the principal cell phone number, including area code, of the principal place of business. Please include your country code if you are not domiciled in the United States.

9. USDOT NUMBER. Motor carriers that have already been issued a USDOT Number must provide it. Applicants that have not obtained a USDOT Number will be issued one after completion of the registration process. **Applicants must obtain a USDOT Number before beginning operations.**

10. MC, MX AND FF NUMBER(S). If the Federal Motor Carrier Safety Administration (FMCSA), the Federal Highway Administration (FHWA) or the Interstate Commerce Commission (ICC) has issued you a Motor Carrier Number (MC-number), a Mexico-Domiciled Motor Carrier Number (MX-number), or a Freight Forwarder Number (FF-number), please enter all numbers

11. IRS TAX ID NUMBER Enter the employer identification number (EIN) assigned to you by the U.S. Internal Revenue Service or the Social Security Number (SSN) used to file your company's tax return with the IRS.

12. DUN AND BRADSTREET NUMBER. Enter the business number issued to you by Dun & Bradstreet, if known.

13. FORM OF BUSINESS. Check the appropriate box indicating your form of business:

Sole Proprietor – Individuals who operate a business in their own name.
Partnership – Two or more individuals operating as co-owners, for profit.
Corporation – A legal "entity" created under the laws of a State, owned by shareholders whose liability for corporate debts is limited. Enter State of incorporation.
Limited Liability Company – A limited liability company (LLC) is an entity created under the laws of a State, with characteristics of both a corporation and a partnership.
Subsidiary or **Wholly-Owned Subsidiary** – A parent corporation owns a majority of a subsidiary corporation's shares; a parent corporation owns all of wholly-owned subsidiary's shares.

14. OWNERSHIP AND CONTROL. Motor carriers must check one of the following:

Owned/controlled by citizen of U.S.– If you are owned or controlled by a U.S. citizen(s), this box must be checked.
Owned/controlled by citizen of Mexico - If you are owned or controlled by a citizen(s) of Mexico, this box must be checked and you must be registered with the Mexican Government's Secretaria de Comunicaciones y Transportes (SCT). You must provide your Mexico Federal Taxpayer Registration (RFC) number in item 5.
Owned/controlled by citizen of Canada – If you are owned or controlled by a citizen(s) of Canada, this box must be checked. You must also provide your National Safety Code (NSC) number(s) in item 5 or on a separate attachment.
Owned/controlled by a citizen of other foreign country – If you are domiciled in a country other than the United States, Mexico or Canada, you must check this box. The name of the country of domicile must be provided.

15. NAME(S) OF SOLE PROPRIETOR(S), PARTNERS, OR OFFICERS AND TITLES. Check the appropriate box and enter the names of your owners. If you are a sole proprietor, please provide your full name. If you are organized as a partnership, please provide the full names of the general and limited partners. If you are organized as a corporation, please provide the full names of the officers and their respective titles. If you are organized as a limited liability company, you must provide the full names of the officers and their respective titles. If you require additional space, please attach separate sheets of paper, with your business name and "Item # 15" at the top of each page.

16. REVENUE. Enter the gross annual operating revenue of the motor carrier for the last calendar year. Applicants for registration with no revenue in the past year must enter zero (0). If you earned revenue for only a part of the calendar year, please provide the number of months you operated, and the amount of revenue earned for that period.

17. OPERATION CLASSIFICATION. Check all the appropriate classifications that apply. If "Other," enter the type of operation in the space provided.

For-Hire Motor Carrier - Transportation by a motor carrier for compensation subject to the provisions of 49 U.S.C. 13902-13904, including:

Property - hazardous materials, household goods, exempt commodities or other non-hazardous materials.

Passengers:
Charter & special operations - generally conducted over irregular routes (i.e., authority that is not restricted to particular roads or highways), between points in the United States. Charter service is the transportation of groups, assembled by someone other than the carrier, who collectively contract with the bus operator for the use of certain equipment for the duration of a particular trip or tour. Generally, a flat rate is charged. The passengers must travel together for the entire trip. Special operations includes almost any type of service which is neither charter nor ordinary regular-route service. It is call-and-demand in nature. The carrier assembles the group through the sale of individual tickets and generally offers some feature in addition to transportation between two points.
International charter & tour bus service - generally operate over irregular routes (i.e., authority that is not restricted to particular roads or highways). This service is the transportation of passengers in charter operations as defined above between points in the United States provided by United States-based enterprises owned or controlled by persons of Mexico.
Scheduled international transportation – transportation of passengers as a carrier over regular routes (specific routes) provided by United States-based enterprises owned or controlled by persons of Mexico.
Regular route – generally performed over regular routes (i.e., authority to perform regularly scheduled service between designated points and operating over named roads or highways).
Limousine/van operations - a passenger vehicle usually built on a lengthened automobile chassis/a small motor vehicle designed or used to transport 15 or fewer passengers, including the driver
FTA grantee – is a passenger motor carrier providing transportation service within a transit service area under an agreement with a Federal, State, or local government funded, in whole or in part, with grant under 49 U.S.C. 5307, 5310, or 5311. Such carriers seek to register to provide for-hire operations between points in a transit service area located in more than one State.

Mexico-owned, U.S.-based enterprise - transporting international cargo and/or household goods.

Private Motor Carrier - transportation by a commercial motor vehicle, not for compensation, as defined by 49 CFR Part 390.
Property (HM) – transports any amount of hazardous materials.
Property (Non-HM) – does not transport any amount of hazardous materials.
Passengers (Business) – a private motor carrier engaged in the interstate transportation of passengers, which is provided in the furtherance of a commercial enterprise and is not available to the public at large.
Passengers (Non-Business) – a private motor carrier engaged in the interstate transportation of passengers that does not otherwise meet the definition of a private motor carrier of passengers (business) (e.g., church buses).
Migrant - interstate transportation by a motor carrier of 3 or more migrant workers to or from their employment by any motor vehicle other than a passenger automobile or station wagon.

Property Broker - arranges for the transportation of cargo belonging to others using for-hire carriers to provide the actual truck transportation. Brokers do not own trucks.

Freight Forwarder - holds out to provide the truck transportation of cargo belonging to others, using for-hire carriers to provide the actual transportation. In the ordinary course of business, freight forwarders (1) assemble and consolidate shipments, (2) conduct break bulk and distribution operations, and (3) assume responsibility for transportation of property from place of receipt to the place of destination. Freight Forwarders may or may not have trucks.

Hazardous Materials Shipper – transportation of hazardous property wholly within the boundaries of a single state.

"Other" - transports property or passengers by a classification of operation not described above. Please enter other classification description.

18. COMPANY CONTACT PERSON. The person at the applicant's place of business that prepares the MCSA-1 or otherwise assists in the completing the application. Provide the contact person's name, title, position, address, telephone number, fax number and email address (optional). This individual will be contacted by FMCSA if there are questions concerning this application.

19. APPLICANT'S REPRESENTATIVE. If someone other than the applicant prepares the MCSA-1 or otherwise assists the applicant in completing the application, provide the representative's name, title, position, and relationship to the applicant, address, telephone number, fax number and email address (optional). This individual will be contacted by FMCSA if there are questions concerning this application.

20. CERTIFICATION STATEMENT. This certification is applicable to the representations made by you on the MCSA-1. You are certifying to the truthfulness of your statements in this form under penalty of perjury.

SECTION B. MOTOR CARRIER *(TO BE COMPLETED BY MOTOR CARRIERS AND FREIGHT FORWARDERS WITH VEHICLES)*

Beginning on page 5:

21. TYPE OF OPERATION. Check the appropriate type(s) of operation.

Interstate (Non-HM) – transportation of persons or non-hazardous property across State lines, including international boundaries, or wholly within one State as part of a through movement that originates or terminates in another State or country.

Interstate (HM) – transportation of any amount of hazardous property across State lines, including international boundaries, or wholly within one State as part of a through movement that originates or terminates in another State or country.

Intrastate (Non-HM) – transportation of persons or property (non-hazardous) wholly within one State.

Intrastate (HM) – transportation of any amount of hazardous property wholly within the boundaries of a single State.

22. CARGO. Check each type of cargo that you will transport or handle. If "Other" is checked, enter the name of the commodity in the space provided.

23. MILEAGE. Estimate the miles traveled by your commercial motor vehicles (CMVs) during the last calendar year. It makes no difference if the CMVs were leased by you or owned by you. Please round the miles to the nearest 10,000 miles. If you are a new applicant, please enter zero (0).

24. NUMBER OF VEHICLES CURRENTLY OPERATING IN THE U.S. Enter the total number of CMVs owned, term-leased and trip-leased that are, or are expected to be, operational on the date the MCSA-1 is submitted.

Passenger vehicles are defined as:

Motor coach—a vehicle designed for long distance transportation of passengers, usually equipped with storage racks above the seats and a baggage hold beneath the passenger compartment.

School Bus—a vehicle designed and/or equipped mainly to carry primary and secondary students to and from school, usually built on a medium or large truck chassis.

Mini-bus—a motor vehicle designed or used to transport 16 or more passengers, including the driver, and typically built on a small truck chassis. A mini-bus has a smaller seating capacity than a motor coach.

Van—a small motor vehicle designed or used to transport 15 or fewer passengers, including the driver.

Limousine—a passenger vehicle usually built on a lengthened automobile chassis.

25. NUMBER OF DRIVERS OPERATING IN THE U.S. Enter the number of interstate and intrastate drivers used on an average workday in the United States. Part-time, casual, term leased, trip leased and company drivers should be included. Also enter the total number of drivers who have a Commercial Drivers License (CDL).

Enter the number of drivers operating within 100 air miles in each category and the number of drivers operating beyond 100 air miles in each category.

Interstate – driver transports people or property across State lines, including international boundaries, or wholly within one State as part of a through movement that originates or terminates in another State or country.
Intrastate – driver transports people or property wholly within one State.

SECTION C. HAZARDOUS MATERIALS (HM)
(TO BE COMPLETED BY HM MOTOR CARRIERS)

Beginning on Page 6:

26. HAZARDOUS MATERIALS CARRIED OR SHIPPED. If you are a motor carrier and/or a shipper of hazardous materials, complete the appropriate section for each type of hazardous materials (HM) you transport and/or ship. In the columns to the left of the category, circle "C" for motor carrier and/or "S" for a shipper. In the columns to the right of the category, circle "B" if the HM is transported in bulk (over 119 gallons) and "NB" if the HM is transported non-bulk (119 gallons or less).

SECTION D. TRANSPORTATION OF HOUSEHOLD GOODS *(TO BE COMPLETED BY HOUSEHOLD GOODS MOTOR CARRIERS, HOUSEHOLD GOODS BROKERS, AND HOUSEHOLD GOODS FREIGHT FORWARDERS)*

Beginning on Page 7:

27. CERTIFICATION: ARBITRATION AND TARIFF. If you are a for-hire motor carrier of property intending to transport household goods (as defined in 49 U.S.C. 13102(10)), you must certify your agreement to offer arbitration as a means of settling loss and damage claims. This is a condition of registration. Also, if you are a broker intending to be involved with household goods, you must certify your worthiness and agree to comply with the statutory and regulatory requirements.

SECTION E. COMMERCIAL ZONE OPERATIONS *(TO BE COMPLETED BY MEXICO- DOMICILED COMMERCIAL ZONE MOTOR CARRIERS)*

Beginning on Page 8:

28. SCOPE OF REGISTRATION. If you are domiciled in Mexico, please check the appropriate box.

29. UNITED STATES ADDRESS. If you maintain an office within the continental United States, please provide the complete address.

SECTION F. ADDITIONAL INFORMATION *(TO BE COMPLETED BY ALL MOTOR CARRIERS (EXCEPT PRIVATE NON-HAZARDOUS MATERIALS CARRIERS), INCLUDING THOSE DOMICILED IN MEXICO, AND BY BROKERS AND FREIGHT FORWARDERS)*

Beginning on Page 9:

30. FINANCIAL RESPONSIBILITY. For-hire motor carriers of property and passengers, property brokers, freight forwarders and private carriers of hazardous materials must comply

with requirements for demonstrating minimum financial responsibility for bodily injury and property damage (49 CFR Part 387) and submit evidence of insurance with FMCSA. Check each box that describes the type of business you will be conducting. If you choose not to submit evidence of insurance with the Form MCSA-1, you must contact your insurance company and ensure that it submits the required information in a timely manner.

FINANCIAL RESPONSIBILITY: MINIMUM COVERAGE

PASSENGER CARRIERS	
Seating Capacity	Amount
Any vehicle with a seating capacity of 16 or more passengers, including the driver	$5,000,000
Any vehicle with a seating capacity of 15 or fewer passengers, including the driver	$1,500,000

MOTOR PROPERTY CARRIER		
Bodily Injury and Property Damage Liability Requirements		
KIND OF EQUIPMENT	COMMODITY	AMOUNT OF COVERAGE REQUIRED
Freight vehicles under 10,000 pounds (4536 kilograms) or GVWR	Property (non-hazardous).	$300,000
Freight vehicles of 10,000 pounds (4536 kilograms) or more GVWR	Property (non-hazardous).	$750,000
Freight vehicles of 10,000 (4536 kilograms) pounds or more GVWR	Hazardous substances, as defined in § 171.8 of this title, transported in cargo tanks, portable tanks, or hopper-type vehicles with capacities in excess of 3,500 water gallons, or in bulk Class A or B explosives, poison gas, (Poison A), liquefied compressed gas or compressed gas, or highway route controlled quantity or radioactive materials as defined in § 173.455.	$5,000,000
Freight vehicles of 10,000 pounds (4536 kilograms) or more GVWR	Oil listed in § 172.101; hazardous waste, hazardous materials and hazardous substances defined in § 171.8 and listed in § 172.101, but not mentioned in (b) above or (d) below.	$1,000,000
Freight vehicles under 10,000 (4536 kilograms) pounds GVWR	Any quantity of class A or B explosives; any quantity of poison gas (Poison A); or highway route controlled quantity radioactive materials as defined in § 173.455.	$5,000,000
Cargo Insurance Requirements		
Motor carriers and freight forwarders of household goods	$5,000 for loss of or damage to property carried on any one vehicle and $10,000 for the aggregate losses or damages occurring at any one time or place	

PROPERTY BROKERS
A property broker must have a surety bond or trust fund in effect for $10,000
SELF INSURED
The self-insurance program is authorized by statue 49 U.S.C. 13906, 31138 and 31139
FREIGHT FORWARDERS
(Please refer to Form MCSA-1.)
MOTOR CARRIERS DOMICILED IN MEXICO ONLY
These carriers must carry the same amount of insurance coverage as U.S. based carriers motor carriers of property, however, they do not need to file the insurance forms with FMCSA. These carriers must carry in each of their vehicles when crossing into the U.S. a Form MCS-90 and acceptable evidence of required bodily injury and property damage insurance to cover the carrier's operation during the time it is in the U.S.

If you are issued a Certificate of Registration, the following must be carried on each of your commercial motor vehicles when they cross the border:

- A current MCS-90 indicating insurance coverage, or
- Evidence of insurance. The evidence of insurance must show either trip insurance coverage (24 hours or more coverage) or evidence of continuing insurance.

31. AFFILIATIONS. You must disclose certain information concerning relationships and affiliations with other entities registered with FMCSA (or its predecessor agencies). You must indicate whether these entities have ever been disqualified from operating commercial motor vehicles in the United States pursuant to Section 219 of the Motor Carrier Safety Improvement Act of 1999 (P.L. 106-159, December 9, 1999).

32. DESIGNATION OF AGENTS FOR SERVICE OF PROCESS. All motor carrier applicants must designate a process agent in each State where operations are conducted. For example, if applicant will operate only in commercial zones along the U.S./Mexico border that are located in California and Arizona, you must designate an agent in each of those States; if you will operate only in one State, an agent must be designated in that State. **You may not begin operations until the Form BOC-3 has been filed with the FMCSA.**

SECTION G. SAFETY CERTIFICATIONS *(TO BE COMPLETED BY MOTOR CARRIERS, INCLUDING THOSE DOMICILED IN MEXICO, AND BY FREIGHT FORWARDERS WITH VEHICLES)*

Beginning on page 11:

33. COMPLETE ALL SAFETY CERTIFICATIONS. You are exempt from the U.S. DOT safety fitness regulations if you operate vehicles with a gross vehicle weight rating under 10,001 pounds exclusively and you will not transport hazardous materials. You must certify that you are familiar with and will observe general operational safety fitness guidelines and applicable State, local and tribal laws relating to the safe operations of commercial vehicles.

If you are not exempt from the U.S. DOT safety fitness regulations, you must complete all Questions in Item 33 (pages 11-13) that pertain to you to demonstrate your willingness and ability to comply with general operational safety fitness guidelines and applicable State, local and tribal laws.

Mexico-domiciled motor carriers
You must also complete all applicable attachments (pages 17-19). If necessary to complete the responses, please attach additional pages, and place your business name and the number of the Section to which you are responding.

SECTION H. CERTIFICATIONS *(TO BE COMPLETED BY MOTOR CARRIERS, BROKERS, AND FREIGHT FORWARDERS)*

Beginning on page 14:

Check the applicable box in response to each question 1 through 7. Read the certification statements carefully.

SECTION I. CANCELLATION *(TO BE COMPLETED BY AN AUTHORIZED OFFICIAL)*

Beginning on Page 15:

Complete this section if you are canceling your USDOT Registration, e.g., you are ceasing interstate operations.

SECTION J. FILING FEE INFORMATION

Beginning on Page 16:

For each new registration, the fee is $200. If you apply to register as more than one of the following classifications (motor carrier, freight forwarder, or broker), you must tender $200 for each.

Indicate how you intend to pay. Not all transactions require a fee.

FMCSA DOES NOT REFUND FILING FEES.

ATTACHMENTS TO SECTION G

Beginning on Page 17:

If you are a motor carrier domiciled in Mexico, you are required to complete Attachments A–D and F. If you are a Mexico-domiciled motor carrier and you also transport hazardous materials, you are also required to complete Attachment E.

OTHER CONSIDERATIONS – Before beginning operation, you may have the responsibility of complying with other laws, such as registration with the States and payment of fuel taxes.

MAILING – If you prefer to file your completed MCSA-1 by mail or express mail, please submit to the address below. Be certain to enclose the appropriate filing fee. Please retain a copy of the completed MCSA-1 (and all attachments) and the instructions for your records.

ALL APPLICANTS	Federal Motor Carrier Safety Administration 400 Seventh St., SW, Room 8214 Washington, DC 20590

UNITED STATES DEPARTMENT
OF TRANSPORTATION
Federal Motor Carrier Safety Administration

For FMCSA Use Only
Date Received: _____
Tracking Number: _____

FMCSA REGISTRATION / UPDATE

(USDOT NUMBER APPLICATION)

FORM MCSA-1

PLEASE READ THE INSTRUCTIONS FOR THIS FORM CAREFULLY BEFORE PROCEEDING

This form contains seven Reasons for Filing: New Registration, Reinstatement, New Entrant Reapplication, Biennial Update, Name / Address Change, Other Update and Cancellation. For each reason please complete the appropriate sections of this form as indicated below:

PLEASE COMPLETE ALL APPLICABLE SECTIONS **TYPE OF OPERATION**	REASONS FOR FILING			
	1	2 - 5	6	7
	NEW REGISTRATION	NEW ENTRANT REAPPLICATION(2), BIENNIAL UPDATE (3), NAME / ADDRESS CHANGE (4), OTHER UPDATE (5)	REINSTATEMENT	CANCELLATION
MOTOR CARRIER (NOT DOMICILED IN MEXICO) OF:				
HOUSEHOLD GOODS	A B D F G H J	A B	A B F	A I
HAZARDOUS MATERIALS	A B C F G H J	A B C	A B C F	A I
OTHER PROPERTY	A B F G H J	A B	A B F	A I
MOTOR CARRIER (DOMICILED IN MEXICO) OF:				
HOUSEHOLD GOODS	A B D E F G H J & ATT. B-F	A B	A B F	A I
HAZARDOUS MATERIALS	A B C E F G H J & ATT. B-F	A B C	A B C F	A I
OTHER PROPERTY	A B E F G H J & ATT. B-F	A B	A B F	A I
BROKER OF:				
HOUSEHOLD GOODS	A D F H J	A	A F	A I
OTHER PROPERTY	A F H J	A	A F	A I
FREIGHT FORWARDER (WITH VEHICLES) OF:				
HOUSEHOLD GOODS	A B D F G H J	A B	A B F	A I
OTHER PROPERTY	A B F G H J	A B	A B F	A I
FREIGHT FORWARDER, (NO VEHICLES) OF:				
HOUSEHOLD GOODS	A D F H J	A	A F	A I
OTHER PROPERTY	A F H J	A	A F	A I

UNITED STATES DEPARTMENT
OF TRANSPORTATION
Federal Motor Carrier Safety Administration

For FMCSA Use Only
Date Received: _____
Tracking Number: _____

FEES

New Registration	**$200**
Reinstatement	**$100**
All Others	**No Fee**

REASON FOR FILING *(Check Only One)*

☐ NEW REGISTRATION ☐ REINSTATEMENT ☐ NEW ENTRANT REAPPLICATION

☐ BIENNIAL UPDATE ☐ NAME / ADDRESS CHANGE ☐ OTHER UPDATE ☐ CANCELLATION

SECTION A. BUSINESS DESCRIPTION *(TO BE COMPLETED BY ALL)*

1. LEGAL NAME OF BUSINESS

2. "DOING BUSINESS AS" (D/B/A) NAME

3. PRINCIPAL PLACE OF BUSINESS

STREET ADDRESS | CITY | STATE/PROVINCE | ZIP CODE+4 | COLONIA *(Mexico Only)*

4. MAILING ADDRESS ☐ **CHECK HERE IF MAILING ADDRESS IS THE SAME AS PRINCIPAL PLACE OF BUSINESS**

STREET ADDRESS OR PO BOX | CITY | STATE/PROVINCE | ZIP CODE+4 | COLONIA *(Mexico Only)*

5. COUNTRY OF DOMICILE OF PRINCIPAL PLACE OF BUSINESS

☐ United States ☐ Mexico ☐ Canada ☐ Other Foreign Country

Mexico RFC Number (Federal Taxpayer Registry) | Canadian NSC Number (National Safety Code) | Country Name

6. PRINCIPAL BUSINESS TELEPHONE NUMBER

7. PRINCIPAL BUSINESS FAX NUMBER (optional)

8. PRINCIPAL BUSINESS CELL PHONE NUMBER (optional)

9. USDOT NUMBER

10. MC, MX AND FF NUMBER(S)

MOTOR CARRIER (MC)	MEXICO DOMICILED CARRIER (MX)	FREIGHT FORWARDER (FF)

11. IRS TAX ID NUMBER

EIN NUMBER ☐☐☐☐☐☐☐☐☐☐

SSN NUMBER ☐☐☐☐☐☐☐☐☐☐

12. DUN & BRADSTREET NUMBER

13. FORM OF BUSINESS *(Select only one)*

☐ Sole Proprietor ☐ Partnership ☐ Limited Liability Company ☐ Corporation State of Incorporation _____

☐ Subsidiary ☐ Wholly Owned Subsidiary

UNITED STATES DEPARTMENT
OF TRANSPORTATION
Federal Motor Carrier Safety Administration

For FMCSA Use Only
Date Received: _____
Tracking Number: _____

14. OWNERSHIP and CONTROL

☐ Owned/controlled by resident of U.S.
☐ Owned/controlled by resident of Mexico
☐ Owned/controlled by resident of Canada
☐ Owned/controlled by resident of other foreign country _____ Name of Country

15. NAME(S) OF SOLE PROPRIETOR(S), PARTNERS, OR OFFICERS AND TITLES (e.g. PRESIDENT, TREASURER, GENERAL PARTNER, LIMITED PARTNER)

☐ CORPORATION NAME _____ TITLE _____

☐ SOLE PRORIETOR NAME _____ TITLE _____

☐ PARTNERSHIP NAME _____ TITLE _____

16. REVENUE: Enter your gross annual operating revenue for the last calendar year

Year: ☐☐☐☐ Revenue (*U.S. Dollars*): $ _____ Number of months if partial year _____

17. OPERATION CLASSIFICATION *(Check all items that apply)*

a. For-Hire Motor Carrier

☐ Property
- ☐ Hazardous Materials
- ☐ Household Goods
- ☐ Exempt Commodities
- ☐ Other Non-Hazardous Materials

☐ Passengers
- ☐ Charter & Special Operations
- ☐ International Charter & Tour Bus Service
- ☐ Scheduled International Transportation
- ☐ Regular Route
- ☐ Limousine/Van Operations
- ☐ FTA Grantee

☐ Mexico-owned, U.S.-based Enterprise
- ☐ United States based Enterprise Owned or Controlled by Persons of Mexico Providing Truck Services for the Transportation of International Cargo (except Household Goods)
- ☐ United States based Enterprise Owned or Controlled by Persons of Mexico Providing Truck Services for the Transportation of International Household Goods Shipments

b. Private Motor Carrier

☐ Property – Hazardous Materials
☐ Property – Non-Hazardous Materials
☐ Passengers - Business
☐ Passengers - Non-business
☐ Migrant Workers

c. Property Broker

☐ General Freight (except Household Goods)
☐ Household Goods

d. Freight Forwarder

☐ General Freight (except Household Goods)
☐ Household Goods

e. Hazardous Materials Shipper

☐ Interstate
☐ Intrastate

f. Other

☐ _____

UNITED STATES DEPARTMENT
OF TRANSPORTATION
Federal Motor Carrier Safety Administration

For FMCSA Use Only
Date Received: _____
Tracking Number: _____

18. COMPANY CONTACT PERSON (Please designate an individual within your company to respond to inquiries)

_____
Name, title, and position

_____
Street Address

City	State	Country	Zip Code/Postal Code	Colonia – Mexico only

(____) _____ (Telephone Number) (____) _____ (Fax Number) (optional) _____ (Internet E-mail Address) (optional)

19. APPLICANT'S REPRESENTATIVE (Please designate an individual to respond to inquiries, if applicable)

_____
Name and title, position, and relationship to applicant

_____
Street Address

City	State	Country	Zip Code/Postal Code	Colonia – Mexico only

(____) _____ (Telephone Number) (____) _____ (Fax Number) _____ (Internet E-mail Address) (optional)

20. CERTIFICATION STATEMENT (to be completed by an authorized official)

I, _____, certify that I am familiar with the Federal Motor Carrier Safety Regulations and, if applicable, the Federal Hazardous Materials Regulations. Under penalties of perjury, I declare that the information entered on this report is, to the best of my knowledge and belief, true, correct, and complete.
(Please Print Name)

Signature _____ Date_____ Title_____

UNITED STATES DEPARTMENT
OF TRANSPORTATION
Federal Motor Carrier Safety Administration

For FMCSA Use Only
Date Received: _____
Tracking Number: _____

SECTION B. MOTOR CARRIER *(TO BE COMPLETED BY ALL MOTOR CARRIERS AND FREIGHT FORWARDERS WITH VEHICLES)*

21. TYPE OF OPERATION *Please check all that apply*: ("HM= Hazardous Materials")

☐ INTERSTATE (NON-HM) ☐ INTERSTATE (HM) ☐ INTRASTATE (Non-HM) ☐ INTRASTATE (HM)

22. CARGO *Please check all classifications of cargo that you transport or handle*:

a. ☐ General Freight
b. ☐ Household Goods
c. ☐ Metal: Sheets, Coils, Rolls
d. ☐ Motor Vehicles
e. ☐ Driveaway-Towaway
f. ☐ Logs, Poles, Beams, Lumber
g. ☐ Building Materials
h. ☐ Mobile Homes
i. ☐ Machinery, Large Objects
j. ☐ Fresh Produce
k. ☐ Liquid/Gases
l. ☐ Intermodal Container
m. ☐ Passengers
n. ☐ Oil Field Equipment
o. ☐ Livestock
p. ☐ Grain, Feed, Hay
q. ☐ Coal/Coke
r. ☐ Meat
s. ☐ Garbage, Refuse, Trash
t. ☐ U.S. Mail
u. ☐ Chemicals
v. ☐ Commodities Dry Bulk
w. ☐ Refrigerated Food
x. ☐ Beverages
y. ☐ Paper Products
z. ☐ Utility Service
aa. ☐ Farm Supplies
bb. ☐ Construction
cc. ☐ Water Well
dd. ☐ Other *(Please specify)*: _____

23. MILEAGE

Please estimate the total number of miles your commercial motor vehicle(s) (leased or owned) traveled in the U.S. during the last calendar year.

Calendar Year: ☐☐☐☐ Mileage: _____

24. NUMBER OF VEHICLES CURRENTLY OPERATING IN THE U.S.

	Straight Trucks	Truck Tractors	Trailers	Hazmat Cargo Tank Trucks	Hazmat Cargo Tank Trailers	Motor Coach	School Bus			Mini-bus	Van.		Limousine		
							Number of vehicles carrying number of passengers (including the driver) below								
							1-8	9-15	16+	16+	1-8	9-15	1-8	9-15	16+
Owned															
Term Leased															
Trip Leased															

25. NUMBER OF DRIVERS OPERATING IN THE U.S.

	INTERSTATE	INTRASTATE	TOTAL DRIVERS	TOTAL CDL DRIVERS
Within 100-Mile Radius				
Beyond 100-Mile Radius				

UNITED STATES DEPARTMENT
OF TRANSPORTATION
Federal Motor Carrier Safety Administration

For FMCSA Use Only
Date Received: _____
Tracking Number: _____

SECTION C. HAZARDOUS MATERIALS (HM)

(TO BE COMPLETED BY HM MOTOR CARRIERS)

26. HAZARDOUS MATERIALS CARRIED OR SHIPPED ***(Please circle all that apply)***

C (Carried) S (Shipped) B (Bulk) – in Cargo Tanks NB (Non-Bulk) – in Packages

C	S	A.	Div 1.1 Explosives (with mass explosion hazard)	B	NB	C	S	V.	Div 4.3 Dangerous when wet material	B	NB
C	S	B.	Div 1.2 Explosives (with projection hazard)	B	NB	C	S	W.	Div 5.1 Oxidizer	B	NB
C	S	C.	Div 1.3 Explosives (with predominantly fire hazard)	B	NB	C	S	X.	Div 5.2 Organic Peroxide	B	NB
C	S	D.	Div 1.4 Explosives (with no significant blast hazard)	B	NB	C	S	Y.	Div 6.2 Infectious substance (Etiologic agent)	B	NB
C	S	E.	Div 1.5 Very insensitive explosives; blasting agents	B	NB	C	S	Z.	Div 6.1 A (Poison Liquid which is a PIH Zone A)	B	NB
C	S	F.	Div 1.6 Extremely insensitive detonating substances	B	NB	C	S	AA.	Div 6.1 B (Poison Liquid which is a PIH Zone B)	B	NB
C	S	G.	Div 2.1 Flammable gas	B	NB	C	S	BB.	Div 6.1 Poison (Poisonous liquid with no inhalation hazard)	B	NB
C	S	H.	Div 2.1 LPG (Liquefied Petroleum Gas)	B	NB	C	S	CC.	Div 6.1 Solid (Meets the definition of a poisonous solid)	B	NB
C	S	I.	Div 2.1 Methane Gas	B	NB	C	S	DD.	Class 7 Radioactive materials.	B	NB
C	S	J.	Div 2.2 Non-flammable compressed gas	B	NB	C	S	EE.	HRCQ (Highway Route Controlled Quantity of Radioactive Material)	B	NB
C	S	K.	Div 2.2 A (Anhydrous Ammonia)	B	NB	C	S	FF.	Class 8 Corrosive material	B	NB
C	S	L.	Div 2.3 A (Poison Gas which is Poison Inhalation Hazard (PIH) Zone A	B	NB	C	S	GG	Class 8 A (Corrosive liquid which is a PIH Zone A)	B	NB
C	S	M.	Div 2.3 B (Poison Gas which in PIH Zone B)	B	NB	C	S	HH.	Class 8 B (Corrosive liquid which is a PIH Zone B)	B	NB
C	S	N.	DIV 2.3 C (Poison Gas which is PIH Zone C)	B	NB	C	S	II.	Class 9 Miscellaneous hazardous material	B	NB
C	S	O.	DIV 2.3 D (Poison Gas which is PIH Zone D)	B	NB	C	S	JJ.	Elevated Temperature Material (Meets definition in 49 CFR 171.8 for an elevated temperature material)	B	NB
C	S	P.	Class 3 Flammable and combustible liquid	B	NB	C	S	KK.	Infectious Waste (Meets definition in 49 CFR 171.8 for an infectious waste)	B	NB
C	S	Q.	Class 3 A (Flammable liquid which is a PIH Zone A)	B	NB	C	S	LL.	Marine Pollutants (Meets Definition in 49 CFR 171.8 for a marine pollutant)	B	NB
C	S	R.	Class 3 B (Flammable liquid which is a PIH Zone B)	B	NB	C	S	MM.	Hazardous Sub (RQ) (Meets definition in 49 CFR 171.8 of a reportable quantity of a hazardous substance)	B	NB
C	S	S.	Combustible Liquid (Refer to 49 CFR 173.20 (b))	B	NB	C	S	NN.	Hazardous Waste (Meets definition in 49 CFR 171.8 of a hazardous waste)	B	NB
C	S	T.	Div 4.1 Flammable Solid	B	NB	C	S	OO.	ORM (Meets definition in 49 CFR 171.8 of Other Regulated Material)	B	NB
C	S	U.	Div 4.2 Spontaneously combustible material	B	NB						

UNITED STATES DEPARTMENT
OF TRANSPORTATION
Federal Motor Carrier Safety Administration

For FMCSA Use Only
Date Received: _____
Tracking Number: _____

SECTION D. TRANSPORTATION OF HOUSEHOLD GOODS *(TO BE COMPLETED BY HOUSEHOLD GOODS MOTOR CARRIERS, HOUSEHOLD GOODS BROKERS, AND HOUSEHOLD GOODS FREIGHT FORWARDERS)*

27. CERTIFICATION: ARBITRATION AND TARIFF

MOTOR CARRIER OR FREIGHT FORWARDER OF HOUSEHOLD GOODS (including United States-based enterprises transporting international household goods shipments)

I, _____, certify that I am fit, willing, and able to provide the specialized
Print First and Last Name and Title

services necessary to transport household goods. I am familiar with FMCSA regulations for household goods movements, have acquired or am willing to acquire the protective equipment and trained operators necessary to perform household goods movements, and the following information can be used to contact a representative of the arbitration program in which I will participate. I certify that my tariff is available for inspection by shippers upon reasonable request. I will offer arbitration as a means of settling loss and damage disputes.

Contact information for the arbitration program in which I will participate:

Name	Address	Telephone Number

_____
Signature of Motor Carrier or Freight Forwarder Representative

BROKER OF HOUSEHOLD GOODS

I, _____, certify that I am fit, willing, and able to provide household goods
Print Name and Title

brokerage operations and to comply with all pertinent statutory and regulatory requirements.

_____ Signature of Company Official
_____ Date
_____ Title

UNITED STATES DEPARTMENT
OF TRANSPORTATION
Federal Motor Carrier Safety Administration

For FMCSA Use Only
Date Received: _____
Tracking Number: _____

SECTION E. COMMERCIAL ZONE OPERATIONS *(TO BE COMPLETED BY MEXICO-DOMICILED COMMERCIAL ZONE MOTOR CARRIERS)*

"Within the Commercial Zone" refers to service (1) between Mexico and points entirely in a municipality that is adjacent to Mexico, (2) in contiguous municipalities in the U.S., any one of which is adjacent to Mexico, or (3) in a zone that is adjacent to, and commercially a part of the municipality(ies). A Mexico-domiciled motor carrier may not provide point-to-point transportation services, including express delivery services, within the United States for goods other than international cargo.

28. SCOPE OF REGISTRATION

- ☐ Service as a for-hire motor carrier of property (except household goods) within the commercial zone
- ☐ Service as a for-hire motor carrier of household goods within the commercial zone
- ☐ Service as a private motor carrier of property (handling applicant's own goods) within the commercial zone
- ☐ Service as a passenger motor carrier within the commercial zone

29. UNITED STATES ADDRESS: Do you currently maintain an office in the United States? If so, please provide the full street address, telephone number, and fax number.

_____
Street Address

_____ City | _____ State | _____ Country | _____ Zip Code

(____) _____ (Telephone Number)

(____) _____ (Fax Number)

UNITED STATES DEPARTMENT
OF TRANSPORTATION
Federal Motor Carrier Safety Administration

For FMCSA Use Only
Date Received: _____
Tracking Number: _____

SECTION F. ADDITIONAL INFORMATION *(TO BE COMPLETED BY MOTOR CARRIERS, EXCEPT PRIVATE NON-HAZARDOUS MATERIALS CARRIERS, INCLUDING THOSE DOMICILED IN MEXICO AND BY BROKERS AND FREIGHT FORWARDERS)*

30. FINANCIAL RESPONSIBILITY *(Check all boxes that apply)*

If you are a private motor carrier and you do not transport hazardous materials, or you are a Mexico-domiciled motor carrier of property only and you operate exclusively in the commercial zone, please skip to item 31, page 10.

a. MOTOR PASSENGER CARRIER

For-Hire motor passenger carriers operating in the United States, including Mexico-domiciled motor passenger carriers, must maintain public liability insurance. The minimum amount of coverage is shown in parentheses.

(Please check only one): I

☐ have one or more vehicles with a seating capacity of 16 passengers or more including the driver ($5,000,000 U.S.)

☐ have only motor vehicles with a seating capacity of 15 passengers or fewer including the driver ($1,500,000 U.S.)

☐ am a grantee of the Federal Transit Administration. I understand that I am not required to comply with FMCSA minimum levels of public liability insurance, and that I am required to maintain financial responsibility at the highest level required by any State within the transit service area (49 U.S.C. 31138(e) (4)).

My transit area lies within the borders of the following States: _____

I will maintain financial responsibility in the amount of $ _____

My insurance company ☐ has filed ☐ will file proof of liability insurance coverage.

Note: Grantees under 49 U.S.C. 5307, 5310, or 5311 that file evidence of State-prescribed financial responsibility limits that are lower than the Federal limits will be registered to provide interstate service within their designated transit service area only.

b. MOTOR PROPERTY CARRIER

☐ I will operate motor vehicles having a gross vehicle weight rating (GVWR) of 10,000 pounds (4,536 kg.) or more to transport:

- ☐ Non-hazardous commodities ($750,000 U.S)
- ☐ Hazardous materials referenced in the FMCSA regulations at 49 CFR § 387.303(b)(2)(c) ($1,000,000 U.S)
- ☐ Hazardous materials referenced in the FMCSA regulations at 49 CFR § 387.303(b)(2)(b) ($5,000,000 U.S)

☐ I will only operate motor vehicles having a gross vehicle weight under 10,000 pounds (4,536 kg). I will transport:

- ☐ Any quantity of: (1) Division 1.1, 1.2 or 1.3 explosives, (2) and quantity of poison gas (Division 2.3, Hazard Zone A or Division 6.1, Packing Group 1, Hazard Zone A materials), (3) or highway route-controlled radioactive materials ($5,000,000 U.S.)
- ☐ Commodities other than those listed above ($300,000 U.S)

c. PROPERTY BROKER

(Please select one): My insurance or surety company/financial institution

☐ has filed a property broker's surety bond or trust fund agreement in the amount of $10,000

☐ will file a property broker's surety bond or trust fund agreement in the amount of $10,000

d. SELF-INSURED BUSINESSES

I have an FMCSA-approved self-insurance plan for:

☐ BI&PD liability ☐ Cargo liability ☐ both BI&PD and Cargo liability

and I am in full compliance with the conditions of the decision authorizing me to self-insure.

UNITED STATES DEPARTMENT
OF TRANSPORTATION
Federal Motor Carrier Safety Administration

For FMCSA Use Only
Date Received: _____
Tracking Number: _____

e. FREIGHT FORWARDER

☐ I will operate as a freight forwarder only and I seek a waiver of BI&PD liability requirements; I certify that in my forwarding operations I (1) will not own or operate any motor vehicles upon highways in the transportation of property; (2) will not perform transfer, collection, or delivery services; and (3) will not have motor vehicles operated under my direction and control in the performance of transfer, collection, or delivery services.

☐ Will operate vehicles having Gross Vehicle Weight Ratings (GVWR) of 10,000 pounds or more to transport:

- ☐ Non-hazardous commodities ($750,000).
- ☐ Hazardous materials referenced in the FMCSA's insurance regulations at 49 CFR 1043.2(b)(2)(c)($1,000,000).
- ☐ Hazardous materials referenced in the FMCSA's insurance regulations at 49 CFR 1043.2(b)(2)(b)($5,000,000).

☐ Will operate only vehicles having Gross Vehicle Weight Ratings (GVWR) under 10,000 pounds to transport:

- ☐ Any quantity of Class A or B explosives, any quantity of poison gas (Poison A), or highway route controlled quantity of radioactive materials ($5,000,000).
- ☐ Commodities other than those listed above ($300,000).

☐ I will maintain Cargo Insurance ($5,000 U.S. / $10,000 U.S.) – See 387.303(b)(5)

f. MOTOR CARRIERS DOMICILED IN MEXICO ONLY

Have you operated, or do you currently operate, under trip insurance issued for movements in the U.S. border commercial zones?

☐ Yes ☐ No See 49 CFR 387.303(b)(4)

g. INSURANCE INFORMATION

Do you currently maintain insurance coverage for bodily injury & property damage? ☐ Yes ☐ No

If "Yes", please provide the following information:

Insurance Company _____

Address _____

_____

Maximum Insurance Amount _____

Policy Number _____

Date Issued _____

Insurance Effective Date _____ Expiration Date _____

31. AFFILIATION WITH OTHER FORMER ICC, FHWA, OMCS, OR FMCSA LICENSED ENTITIES

Disclose all relationships you now have, or have had in the past 3 years, with other FMCSA-regulated entities. This could be in the form of a percentage of stock ownership, a loan, or a management position. If this requirement applies to you, provide the name of the company, MC/MX-Number, USDOT Number, and the company's latest U.S. DOT safety rating. (If you require more space, attach the information to this application form.)

You must indicate whether these entities are currently disqualified from operating commercial motor vehicles anywhere in the United States pursuant to Section 219 of the Motor Carrier Safety Improvement Act of 1999.

USDOT #	MC/MX No.	Legal Name	DBA Name	Current Safety Rating	Revoked

32. DESIGNATION OF AGENTS FOR SERVICE OF PROCESS

Form No. BOC-3 ☐ attached. ☐ on file with FMCSA. ☐ will be filed electronically.

UNITED STATES DEPARTMENT
OF TRANSPORTATION
Federal Motor Carrier Safety Administration

For FMCSA Use Only
Date Received: _____
Tracking Number: _____

SECTION G. SAFETY CERTIFICATIONS *(TO BE COMPLETED BY MOTOR CARRIERS INCLUDING THOSE DOMICILED IN MEXICO, AND BY FREIGHT FORWARDERS WITH VEHICLES)*

33. If you are exempt, mark the box "EXEMPT" certifying to this fact and go to section SECTION H. You are also certifying that you are familiar with and will observe general operational safety guidelines, as well as any applicable state and local laws and requirements relating to the safe operation of commercial motor vehicles and the safe transportation of hazardous materials. If you are not exempt, mark the box "NOT EXEMPT" and answer the questions below, where applicable. You must attach all requested attachments.	EXEMPT ☐	NOT EXEMPT ☐
a. I maintain current copies of all U.S. DOT Federal Motor Carrier Safety Regulations, Federal Motor Vehicle Safety Standards, and in the case of property carrier transporting hazardous materials, the Hazardous Materials Regulations. I understand and will comply with these regulations, and I will ensure that all company personnel are aware of the requirements of these regulations.	YES ☐	NO ☐

b. Individual responsible for compliance with applicable regulatory and safety requirements.

Full Name	Complete Address	Position Title

c. I certify that the following tasks and measures will be fully accomplished and procedures fully implemented before I commence operations in the United States:

I. DRIVER QUALIFICATIONS		
1. I have in place a system and procedures for ensuring the continued qualification of drivers to operate safely, including a safety record for each driver, procedures for verification of proper age and licensing of each driver, procedures for identifying drivers who are not complying with the safety regulations and a description of a retraining and educational program for poorly performing drivers.	YES ☐	NO ☐
2. I have procedures in place to review employment and driving histories of my drivers for at least the last 3 years, to determine the qualifications and the competency to drive safely of each.	YES ☐	NO ☐
3. I have established a program to review the records of each driver at least every twelve (12) months and to maintain a record of the review.	YES ☐	NO ☐
TO BE COMPLETED BY MOTOR CARRIERS DOMICILED IN MEXICO ONLY 4. I will ensure that all of my drivers operating in the United States are at least 21 years of age and possess a valid Licencia Federal de Conductor (LFC) and that the driver's LFC is registered in Mexico's SCT database.	YES ☐	NO ☐
II. HOURS OF SERVICE		
1. I have in place a record keeping system and procedures to monitor the hours of service performed by drivers including procedures for continuing review of driver log books and for ensuring compliance with all operations requirements.	YES ☐	NO ☐
2. I have ensured that all drivers to be used in the United States are knowledgeable of the U.S. hours of service requirements, and I have clearly and specifically instructed drivers concerning the application of the 10 hour, 11 hour, 14 hour and 60 and 70 hour rules, as well as the requirement for preparing daily log entries in their own handwriting for each 24 hour period.	YES ☐	NO ☐
3. I will ensure, once operations in the United States have begun, that my drivers operate within the hours of service rules and are not fatigued while on duty.	YES ☐	NO ☐
TO BE COMPLETED BY MOTOR CARRIERS DOMICILED IN MEXICO ONLY 4. I have attached to this application statements describing the monitoring procedures designed to ensure that my drivers complete logbooks correctly, and also describing my procedures for record keeping and review of drivers. If I have drivers operating under the "100 Air-Mile" exception I have described the maintenance of these records by means of an attachment to this document. (Attachment F page 20)	YES ☐	NO ☐

UNITED STATES.DEPARTMENT
OF TRANSPORTATION
Federal Motor Carrier Safety Administration

For FMCSA Use Only
Date Received: _____
Tracking Number: _____

III. DRUG AND ALCOHOL *(To be completed by motor carriers subject to drug and alcohol testing only)*	
1. I am familiar with the alcohol and controlled substance testing requirements of 49 CFR 382 and 49 CFR 40 and have in place a program for systematic testing of drivers.	YES ☐ NO ☐
TO BE COMPLETED BY MOTOR CARRIERS DOMICILED IN MEXICO ONLY 2. I have attached to this application the name, address, and telephone number of the person(s) responsible for implementing and overseeing alcohol and drug programs and also of the drug testing laboratory and alcohol testing services that are used by me. (Attachment A, page 17)	YES ☐ NO ☐
IV. VEHICLES	
1. I have established a system and procedures for inspection, repair and maintenance of my vehicles, and for preparation and maintenance of records of inspection, repair, and maintenance in accordance with the Federal Motor Carrier Safety Regulations and the Hazardous Materials Regulations.	YES ☐ NO ☐
2. I will ensure that all violations and defects noted on inspection reports are corrected before vehicles and drivers are permitted to continue operation.	YES ☐ NO ☐
TO BE COMPLETED BY MOTOR CARRIERS DOMICILED IN MEXICO ONLY 3. My vehicles were manufactured or have been retrofitted in compliance with the applicable U.S. DOT Federal Motor Vehicle Safety Standards.	YES ☐ NO ☐
4. I have inspected all commercial motor vehicles that I will use in the United States prior to beginning such operations and I have proof of the inspection on-board each vehicle as required by 49 CFR 396.17.	YES ☐ NO ☐
5. I will ensure, once operations in the United States have begun, that all violations and defects noted on inspection reports are corrected before vehicles and drivers are permitted to enter the United States.	YES ☐ NO ☐
V. ACCIDENT MONITORING	
1. I have in place a program for monitoring vehicle accidents and I maintain an accident register in accordance with 49 CFR 390.15.	YES ☐ NO ☐
2. I have established an accident countermeasures program and driver training program to reduce accidents.	YES ☐ NO ☐
TO BE COMPLETED BY MOTOR CARRIERS DOMICILED IN MEXICO ONLY 3. I have **attached to this application** a copy of my accident register for the previous 12 months, or a description of how I will maintain this register once I begin operations in the United States. (Attachment B, page 17)	YES ☐ NO ☐
4. I have **attached to this application** a description and explanation of the accident monitoring program I have implemented for my operations in the United States. (Attachment C, page 18)	YES ☐ NO ☐

UNITED STATES DEPARTMENT OF TRANSPORTATION
Federal Motor Carrier Safety Administration

For FMCSA Use Only
Date Received: _____
Tracking Number: _____

VI. PRODUCTION OF RECORDS	
1. I can and will produce records demonstrating compliance with the safety requirements within 48 hours of receipt of a request from a representative of the USDOT/FMCSA or other authorized Federal or State official.	YES ☐ NO ☐
TO BE COMPLETED BY MOTOR CARRIERS DOMICILED IN MEXICO ONLY 2. I have **attached to this application** the name, address, and telephone number of the employee to be contacted for requesting records. (Attachment D, page 18)	YES ☐ NO ☐
VII. HAZARDOUS MATERIALS (to be completed by motor carriers of hazardous materials only)	
1. I have full knowledge of the U.S. DOT Hazardous Materials Regulations, and have established programs for the thorough training of my personnel as required under 49 CFR part 172, Subpart H and 49 CFR 177.816.	YES ☐ NO ☐
2. I have established a system and procedures for inspection, repair and maintenance of its reusable hazardous materials packages (cargo tanks, portable tanks, cylinders, intermediate bulk containers, etc.,) in a safe condition, and for preparation and maintenance of records of inspection, repair and maintenance in accordance with the U.S. DOT Hazardous Materials Regulations.	YES ☐ NO ☐
3. I have established a system and procedures for filing and maintaining HM shipping documents.	YES ☐ NO ☐
4. I have a system in place to ensure that all HM trucks are marked and placarded as required by 49 CFR part 172, Subparts D and F.	YES ☐ NO ☐
5. I will register under 49 CFR part 107, Subpart G, if I transport any quantity of hazardous materials requiring the vehicle to be placarded.	YES ☐ NO ☐
TO BE COMPLETED BY MOTOR CARRIERS DOMICILED IN MEXICO ONLY 6. I have **attached to this MCSA-1** a statement providing: a. The names of employees responsible for ensuring compliance with HM regulations, b. A description of their HM safety functions, and c. A copy of the training materials employed to provide HM training. (Attachment E, page 19)	YES ☐ NO ☐
TO BE COMPLETED BY CARGO TANK (CT) MOTOR CARRIERS OF HAZARDOUS MATERIALS (HM) DOMICILED IN MEXICO ONLY 7. I have attached certficates of compliance for each cargo tank the company utilizes in the U.S., together with the name, qualifications, CT number, and CT number registration statement of the facility I will utilize to conduct the test and inspect such tanks as required by 49 CFR 180. (Attachment F, page 20)	YES ☐ NO ☐

UNITED STATES DEPARTMENT
OF TRANSPORTATION
Federal Motor Carrier Safety Administration

For FMCSA Use Only
Date Received: _____
Tracking Number: _____

SECTION H. CERTIFICATIONS *(TO BE COMPLETED BY MOTOR CARRIERS, BROKERS, AND FREIGHT FORWARDERS)*

34. By signing the certification statement in Section A (page 4, item 20) and completing 1-7 below, I am on notice that the representations made herein are subject to verification through inspections in the United States and through the request for examination of records and documents. I understand that failure to support the representations contained in this application could form the basis of a proceeding to assess civil penalties and may lead to the revocation of the authority granted.

1.	I am willing and able to provide the proposed operations or service and to comply with all pertinent statutory and regulatory requirements and regulations issued or administered by the U.S. Department of Transportation, including operational regulations, safety fitness requirements, motor vehicle safety standards and minimum financial responsibility requirements.	YES ☐ NO ☐
2a.	I am willing and able to produce for review or inspection documents which are requested for the purpose of determining compliance with applicable statutes and regulations administered by the Department of Transportation, including the Federal Motor Carrier Safety Regulations, Federal Motor Vehicle Safety Standards, and Hazardous Materials Regulations, within 48 hours of any written request.	YES ☐ NO ☐
2b.	I understand that the written request may be served on the contact person identified on Page 4 (Section A, Item No. 18), or the designated process agent.	YES ☐ NO ☐
3.	I am qualified to conduct commercial motor vehicle operations in the United States in accordance with the Motor Carrier Safety Improvement Act of 1999.	YES ☐ NO ☐
4.	I understand that the agent(s) for service of process designated on FMCSA Form BOC-3 will be deemed my official representative(s) for receipt of filings and notices in administrative proceedings under 49 U.S.C.13303, for receipt of filings and notices issued in connection with the enforcement of any Federal statutes or regulations, and for receipt of legal process pertinent to any other legal processing.	YES ☐ NO ☐
5.	I am not a party to an FMCSA registration that is currently under suspension, and was not a party to an FMCSA registration that was revoked within the past 30 days.	YES ☐ NO ☐
6.	If my registration has been revoked, the deficiencies cited in the revocation have been corrected. I attach an explanation of how I will otherwise ensure that basic safety management controls are maintained.	YES ☐ NO ☐
7.	I have paid all taxes owed under Section 4481 of the U.S. Internal Revenue Service (26 U.S.C. § 4481) for the most recent taxable period as defined under Section 4482 (c) of the Internal Revenue Code.	YES ☐ NO ☐

NOTE:
All motor carriers operating within the United States, including foreign-domiciled motor carriers applying for USDOT registration by this form, must comply with all applicable Federal, State, local, and tribal statutory and regulatory requirements when operating within the United States. Such Compliance with these regulatory requirements may require motor carriers and/or individual operators to produce documents for review and inspection.

UNITED STATES DEPARTMENT
OF TRANSPORTATION
Federal Motor Carrier Safety Administration

For FMCSA Use Only
Date Received: _____
Tracking Number: _____

SECTION I. CANCELLATION

35. AN AUTHORIZED OFFICIAL MUST COMPLETE THIS CERTIFICATION AND SECTION A ABOVE TO CANCEL REGISTRATION.

ONCE OPERATING AUTHORITY IS CANCELLED, OPERATION MAY BE RESUMED ONLY WITH APPROVAL BY FMCSA OF AN APPLICATION FOR REINSTATEMENT. REINSTATEMENT IS INITIATED BY SUBMISSION OF A NEW MCSA-1.

I, _____ (Please Print First and Last Name) certify, under penalty of perjury under the laws of the United States of America, that I have the authority to seek cancellation of the registration of _____ (Name of Entity),

USDOT Number _____.

Executed on this _____ (Day) day of _____ (Month), _____ (Year).

Signature _____ Title _____

UNITED STATES DEPARTMENT
OF TRANSPORTATION
Federal Motor Carrier Safety Administration

For FMCSA Use Only
Date Received: _____
Tracking Number: _____

SECTION J. FILING FEE INFORMATION (*FMCSA does NOT refund filing fees)*

36. I submit filing fees as indicated

☐ **New Registration**

☐ **Motor Carrier**
☐ **Freight Forwarder**
☐ **Broker**

Total Number of Boxes Checked ____ **x $200 = $** _____
Total

☐ **Reinstatement $100**
☐ **All Others No Fee**

METHOD OF PAYMENT (Check one):

☐ ELECTRONIC FUNDS TRANSFER (EFT)

BANK NAME: _____

BANK ROUTING NUMBER: ☐☐☐☐☐☐☐☐☐☐☐☐☐☐☐☐☐☐☐☐☐

CHECKING ACCOUNT NUMBER: ☐☐☐☐☐☐☐☐☐☐☐☐☐☐☐☐☐☐☐☐☐

☐ VISA ☐ MASTERCARD ☐ DISCOVER ☐ AMERICAN EXPRESS

Credit Card Number: ☐☐☐☐☐☐☐☐☐☐☐☐☐☐☐☐ Credit Card Expiration Date: ___/___/_____
Month Day Year

Print Name of the person who the credit card is issued to: _____

Signature of the person authorizing use of the credit card: _____

Date the form was completed: _____

FEE POLICY

- **FMCSA does not refund filing fees.**
- Your filing fees must be payable to the **Federal Motor Carrier Safety Administration**, by Electronic Funding Transfer, or by approved credit card.
- Electronic Funding Transfer must be from an account in a bank in the United States.
- Fees are required for each type of registration requested (e.g. motor carrier, broker). You may select more than one type of registration on a single MCSA-1, and submit a single payment for the total fees due. For example, if you wish to be registered as both a motor carrier and a broker, you may file a single MCSA-1 and make a single payment of $400.
- FMCSA will not process your MCSA-1 until your payment has been deducted from your banking or credit card account.

UNITED STATES DEPARTMENT
OF TRANSPORTATION
Federal Motor Carrier Safety Administration

For FMCSA Use Only
Date Received: _____
Tracking Number: _____

ATTACHMENTS TO SECTION G

TO BE COMPLETED BY MOTOR CARRIERS DOMICILED IN MEXICO ONLY

ATTACHMENT A
FOR SECTION G, 33
DRUG AND ALCOHOL TESTING
(BOX III 2)

Below I have listed:
(1) The name, address and position of the person or persons designated by me to be responsible for implementing and overseeing my alcohol and drug programs.
(2) The name, address, and telephone number of both my drug testing laboratory and my alcohol testing service. If the alcohol testing service information is identical to the information for the drug testing laboratory, I have written "Same" in the space for the alcohol testing service.

NAME	ADDRESS	POSITION

NAME OF DRUG TESTING LABORATORY	ADDRESS	TELEPHONE NUMBER

NAME OF ALCOHOL TESTING SERVICE	ADDRESS	TELEPHONE NUMBER

TO BE COMPLETED BY MOTOR CARRIERS DOMICILED IN MEXICO ONLY

ATTACHMENT B
FOR SECTION G, 33
ACCIDENT REGISTER
(BOX V 3)

☐ I am attaching a copy of my accident register for the last 12 months.
☐ I am beginning operations and the following explains how I will maintain my accident register once I begin operations in the U.S.:

UNITED STATES DEPARTMENT
OF TRANSPORTATION
Federal Motor Carrier Safety Administration

For FMCSA Use Only
Date Received: _____
Tracking Number: _____

TO BE COMPLETED BY MOTOR CARRIERS DOMICILED IN MEXICO ONLY

ATTACHMENT C
FOR SECTION G, 33
ACCIDENT MONITORING PROGRAM
(BOX V 4)

The following fully describes my accident monitoring program for operations in the U.S.:

TO BE COMPLETED BY MOTOR CARRIERS DOMICILED IN MEXICO ONLY

ATTACHMENT D
FOR SECTION G, 33
PRODUCTION OF RECORDS
(BOX VI 2)

The following individual(s) is directed by me to respond to inquiries for records:

NAME	ADDRESS	TELEPHONE NUMBER

UNITED STATES DEPARTMENT
OF TRANSPORTATION
Federal Motor Carrier Safety Administration

For FMCSA Use Only
Date Received: _____
Tracking Number: _____

TO BE COMPLETED BY HAZARDOUS MATERIALS MOTOR CARRIERS DOMICILED IN MEXICO ONLY

ATTACHMENT E
FOR SECTION G, 33
HAZARDOUS MATERIALS (HM)
(BOX VII 6)

I am attaching a copy of the materials we employ to provide HM training. Below I have listed my employees (other than drivers) who are responsible for ensuring compliance with HM regulations and a description of the HM safety functions of each employee. I have also attached a copy of my training materials.

EMPLOYEE	DESCRIPTION OF HM SAFETY FUNCTION

UNITED STATES DEPARTMENT
OF TRANSPORTATION
Federal Motor Carrier Safety Administration

For FMCSA Use Only
Date Received: _____
Tracking Number: _____

TO BE COMPLETED BY MOTOR CARRIERS DOMICILED IN MEXICO ONLY

ATTACHMENT F
FOR SECTION G, 33
HOURS OF SERVICE MONITORING PROGRAM
(BOX VII 7)

I have attached to this application statements describing the monitoring procedures designed to ensure that my drivers complete logbooks correctly, and also describing my procedures for record keeping and review of drivers. If I have drivers operating under the "100 Air-Mile" exception, I have described the maintenance of these records by means of an attachment to this document.

The collection of this information is authorized under the provisions of 49 CFR 390-399.

Public reporting for this collection of information is estimated to be 20 minutes per response, including the time for reviewing instructions and completing and reviewing the collection of information. All responses to this collection of information are mandatory, and will be provided confidentiality to the extent allowed by law. Notwithstanding any other provision of law, no person is required to respond to nor shall a person be subject to a penalty for failure to comply with a collection of information subject to the requirements of the Paperwork Reduction Act unless that collection of information displays a current valid OMB Control Number. The valid OMB Control Number for this information collection is 2126-0006. Send comments regarding this burden estimate or any other aspect of this collection of information, including suggestions for reducing this burden to: Information Collection Clearance Officer, Federal Motor Carrier Safety Administration, MC-MBI, U.S. Department of Transportation, Washington, D.C. 20590.

BILLING CODE 4910–EX–C

XII. Rulemaking Analyses and Notices

Executive Order 12866 (Regulatory Planning and Review) and DOT Regulatory Policies and Procedures

FMCSA has determined that this action is a significant regulatory action within the meaning of Executive Order 12866, and is significant within the meaning of Department of Transportation regulatory policies and procedures (DOT Order 2100.5 dated May 22, 1980; 44 FR 11034, February 26, 1979) because it is expected to generate significant public interest. However, it is anticipated that the economic impact of the revisions in this rule would not exceed the annual $100 million threshold for economic significance. The Office of Management and Budget has reviewed this proposed rule.

Regulatory Flexibility Act

The Regulatory Flexibility Act (RFA), as amended by the Small Business Regulatory Enforcement and Fairness Act (SBREFA), requires Federal agencies to analyze the impact of rulemakings on small entities, unless the agency certifies that the rule will not have a significant economic impact on a substantial number of small entities. The agency believes these proposals meet the threshold values for requiring an initial regulatory flexibility analysis (IRFA), since the proposed fees may have a significant impact on a substantial number of small entities. Therefore, FMCSA has prepared this IRFA.

The following sections contain FMCSA's IRFA analysis.

(1) *A description of the reasons why action by the agency is being considered.* This rule is required by the ICC Termination Act of 1995. ICCTA created a new 49 U.S.C. 13908, which directs the Secretary of Transportation to create a single, on-line Federal system to replace the multiple systems currently used by FMCSA to register interstate motor carriers.

One goal of the proposed rule is to streamline the current registration system, and thereby improve the efficiency of the process by which new entrant motor carriers receive USDOT Numbers and operating authority. Another goal is to enhance the fairness of the FMCSA registration process and equalize the filing burden among various groups of motor carriers (authorized for hire, exempt for hire, and private carriers, for instance).

Given these goals, FMCSA has proposed changes in the process by which new entrants register with FMCSA, including the forms that new entrant motor carriers and other applicants file, and the fees assessed for such filings.

(2) *A succinct statement of the objectives of, and the legal basis for, the proposed rule.* The primary objective of this proposal is to streamline the current motor carrier licensing, registration, and insurance filing processes by creating a single, on-line filing system managed by FMCSA. Under this proposal, motor carriers interested in operating in interstate commerce could file all licensing, registration, and insurance compliance documents with FMCSA on-line via the Internet or by mail. Another primary objective is to create uniformity in FMCSA filing requirements for motor carriers. Specifically, the goal is to treat all motor carriers the same, where possible, by eliminating filing distinctions among several types of motor carriers such as for-hire vs. private, and for-hire common vs. for-hire contract, so that where possible each motor carrier essentially files the same forms with FMCSA. As such, the agency proposes that some current FMCSA filing requirements be eliminated, while others be expanded to cover a broader pool of new and existing motor carriers.

As previously noted, this proposed action is responsive to the 49 U.S.C. 13908 directive to develop a single, on-line Federal system for identifying and registering entities within our jurisdiction. The Motor Carrier Safety Act of 1984 requires the Secretary to prescribe regulations on commercial motor vehicle safety. The regulations shall prescribe minimum safety standards for commercial motor vehicles (CMVs). At a minimum, the regulations shall ensure that: (1) CMVs are maintained, equipped, loaded, and operated safely; (2) the responsibilities imposed on operators of CMVs do not impair their ability to operate the vehicles safely; (3) the physical condition of operators of CMVs is adequate to enable them to operate the vehicles safely; and (4) the operation of CMVs does not have a deleterious effect on the physical condition of the operators (49 U.S.C. 31136(a)).

This NPRM is intended to streamline the registration process and ensure that FMCSA can more efficiently track CMVs and ensure their safe operation. As such, it imposes no operational responsibilities on drivers, and, consequently, implements the § 31136(a)(1) mandate that our regulations ensure that CMVs are maintained and operated safely.

(3) *A description of, and where feasible, an estimate of the number of small entities to which the proposed rule would apply.* The URS NPRM is fairly comprehensive in its scope. The majority of the individual proposals in URS apply to both new entrant and existing motor carriers. Regarding new entrants, FMCSA estimated in the regulatory evaluation accompanying this proposal that 47,535 motor carriers entered the industry each year between 1995–2002 seeking interstate authority. Roughly 23,400 of these new entrants are estimated to be non-exempt for-hire carriers, 20,300 are estimated to be exempt for-hire and private carriers, and the remaining 3,800 are other types of new registrants (including 1,922 brokers/freight forwarders, 1,200 Mexico-domiciled carriers, and 664 Other carriers). These estimates were derived from data contained in the MCMIS. The Regulatory Flexibility Act requires Federal agencies to analyze the impact of proposed and final rules on small entities. Small Business Administration (SBA) regulations (13 CFR part 121) define a ''small entity'' in the motor carrier industry by average annual receipts, which is currently set at $21.5 million per firm. FMCSA has developed a model that uses data from the 1997 Economic Census (U.S. Census Bureau), North American Industrial Classification System (NAICS) Code 484 ''Truck Transportation'' segments, to assist us in determining the number of small trucking entities potentially affected by our proposed rules. Examining all property carriers within NAICS Code 484, there are 100,048 for-hire trucking firms. Of these, 75,491, or roughly 75 percent, had annual receipts of less than $21.5 million. Because FMCSA does not have annual sales data on private carriers, the agency assumed the revenue and operations characteristics of the private new entrant firms would be similar to those of new entrant for-hire carriers. Using these assumptions, the agency estimates that almost 35,651 of the total 47,535 new entrants (or 75 percent) are considered small entities. This assumption is generally consistent with an alternative, industry-based approach used to estimate the number of small trucking firms, where size is defined by the number of power units (*i.e.*, tractors or single-unit trucks) owned or leased by motor carriers. MCMIS data indicate that 80 percent of new entrant motor carriers within the industry owned or leased six or fewer power units.

Regarding existing motor carriers (to which some of the URS insurance compliance filings apply), there were 674,771 motor carriers registered with FMCSA as of July 2004, according to the agency's Motor Carrier Management

Information System (MCMIS). However, only 494,126 of these are identified by a specific operations classification (*i.e.*, authorized for hire, private, exempt for hire, etc.), which is one approach FMCSA uses to identify those motor carriers currently operating in interstate commerce. The 180,645 motor carriers omitted here (or the difference between 674,771 and 494,126) are considered ''inactive'' for the purposes of this analysis. Most of these carriers are classified in MCMIS as authorized for hire, but the agency could not match their MCMIS records with those maintained in FMCSA's Licensing and Insurance (L&I) database, where all interstate, for hire carriers are required to maintain various licensing and insurance information in order to be considered ''active'' by the agency. This issue requires further study, but for this analysis, we assume the total, active population of existing motor carriers is currently 494,126. For this analysis, the agency will also assume that 75 percent of existing motor carriers are defined as small entities, since the 1997 Economic Census data indicates as much. Therefore, of the 494,126 current, active motor carriers, almost 371,000 are considered small entities.

As discussed in the regulatory evaluation accompanying this proposal, FMCSA estimated the economic impacts of the proposal separately for each major provision and estimated the impacts to new entrants and existing carriers separately. Since the costs associated with this proposed rule are generally one-time costs, we examined the first-year costs for this analysis. Looking at the first-year costs (and cost savings) of each provision to new entrants, the agency arrived at the following in Table 6:

TABLE 6

	In millions of dollars
Cost, Revising New Entrant Registration Fees	1.5
Cost Savings, Streamlining the Registration Process	−0.7
Cost, Requiring Process Agent Designation	1.5
Cost Savings, Eliminating Proof of Cargo Insurance	−0.1
Cost, Requiring Proof of Liability Insurance	0.07
Cost, Revising Other FMCSA Fees	[1] N/A

[1] The category ''Revising Other FMCSA Fees'' involves fees assessed to existing motor carriers, and therefore not applicable to new entrants.

The net costs of these provisions for new entrant motor carriers in a single year, 2004, would be $2.3 million (after rounding). Note that some of the figures in Table 6 represent cost savings from reduced filing burdens, which partially offset new compliance costs associated with this rule. As stated earlier, it is appropriate to examine only 1 year of costs (the first year in this instance), since these costs are, for the most part, one-time costs to new entrants during their first year of operation. Dividing the $2.3 million figure by 47,535 new entrants in 2004 yields an average compliance cost of $48 per new entrant carrier.

Data from the 1997 Economic Census, NAICS 484, the ''Truck Transportation'' segments, divides trucking firms into 11 revenue categories, beginning with those firms generating less than $100,000 in annual gross revenues and ending with those generating $100 million or more. The term *small trucking firms* is defined here as those that generate less than $21.5 million in annual revenues, of which there are eight specific revenue categories according to the 1997 Economic Census data. The annual revenue categories, the number of firms in each, and the average annual revenues of firms in each category are listed below in Table 7.

TABLE 7.—AVERAGE ANNUAL REVENUES OF SMALL TRUCKING FIRMS (NAICS 484, TRUCK TRANSPORTATION) BY REVENUE CATEGORY

Revenue category ($1,000s)	Number of firms	Average revenues per firm ($1,000s)	Average pre-tax profits per firm ($1,000s)	Compliance costs per firms ($48) as % of profits
< $100	11,865	53	3	1.6
100–249.9	20,959	162	8	0.6
250–499.9	14,492	356	17	0.3
500–999.9	11,193	705	35	0.1
1,000–2,499.9	9,730	1,558	48	0.1
2,500–4,999.9	4,218	3,461	105	0.05
5,000–9,999.9	2,190	6,869	165	<0.05
10,000–21,500	844	15,667	455	<0.05
Total	(100%) 75,491			

Source: 1997 Economic Census (Sales Size of Firms) published by the U.S. Census Bureau.

As seen in the above table, the average cost of the URS provisions per new entrant ($48) represents 1.6 percent of average pre-tax profits of the smallest firms (those with annual gross revenues less than $100,000). Note that this cost applies only during the first year of operation, since these costs are generally not annual or recurring. For the second smallest revenue group (those with annual gross revenues between $100,000 and $249,999), compliance costs represent 0.6 percent of average pre-tax profits in the first year.

Thus, for the two smallest revenue groups, which represent 43 percent of small carriers (for instance, (11,865+20,959)/75,491), pre-tax profits are reduced by far less than 1 percent on average in any given year within the analysis period. Extrapolating these results to the 35,651 small new entrants anticipated each year, there could be 15,330 carriers which have first-year pre-tax profits reduced by less than 1 percent as a result of this proposal. As stated earlier, this monetary impact would be a single-year reduction in profits generally speaking, since for the majority of new entrant carriers, the URS costs are not recurring. The remaining 57 percent of small new entrants could expect a reduction in pre-tax profits of less than 0.1 percent (or less than 1/10 of 1 percent) on average.

Regarding the impact on existing carriers, the costs of this proposed rule

would be lower. First-year costs are as follows in Table 8:

TABLE 8

	In millions of dollars
Cost, Process Agent Designation	19
Cost savings, Eliminating Cargo Insurance Filing	−0.3
Cost, Proof of Liability Insurance	1.4
Cost, Reinstatement Fee Increase	0.4
Cost, Revising Other FMCSA Fees	0.08

The net cost of the URS proposal to existing motor carriers in a single year, 2004, would be $20.6 million. Dividing this figure by the 494,126 existing carriers we estimated earlier are active in 2004 yields an average total of $42 in compliance costs per existing motor carrier.

(4) *A description of the proposed reporting, recordkeeping and other compliance requirements of the proposed rule, including an estimate of the classes of small entities which would be subject to the requirement and the type of professional skills necessary for preparation of the report or record.* Under the URS proposal, all new entrant motor carriers, regardless of size, that are interested in operating in interstate commerce would file a single registration form with FMCSA known as the MCSA–1. Currently, roughly 55 percent of new entrant motor carriers (predominantly, non-exempt for-hire carriers) file three registration forms with FMCSA, the MCS–150, the MCS–150A, and the OP series form. FMCSA has estimated that combining the three forms into a single form would reduce the filing time of new entrant motor carriers by an average of 30 minutes per registration application. Most of the savings accrue to those currently required to fill out three forms. In addition, FMCSA is proposing to provide an on-line filing option for all of its registration and insurance compliance filings. The exact time savings is not yet known, because the newly-envisioned system has not yet been implemented. However, the agency is confident that additional time savings would accrue to those applicants that file their FMCSA registration and insurance compliance forms on-line. No special skills or training are required to file a new entrant registration form or the accompanying documents with FMCSA, at least relative to those currently required. Specifically, new entrant motor carriers are expected to have some basic level of industry knowledge prior to filing their FMCSA registration form, namely the commodities they anticipate they will be hauling, the equipment they will be using, and the number and types of drivers they will employ. However, new entrants will still have the option of filing paper forms with FMCSA, so no knowledge of personal computers or the Internet is required to register with FMCSA under this proposal.

(5) *An identification, to the extent practicable, of all relevant Federal rules which may duplicate, overlap or conflict with the proposed rule.* The agency is not aware of any Federal rules that duplicate, overlap, or conflict with the proposed rule.

With regard to the agency's current authority to assess user fees for the services it provides, guidance regarding fee levels for the new registration system is provided by 49 U.S.C. 13908, which indicates that the Secretary may assess a fee to cover all costs associated with upgrading and operating the registration system. Additionally, guidance provided by the Office of Management and Budget in Circular A–25, ''User Charges,'' is consistent, since it states that ''each service, sale or use of Government goods or resources provided by an agency to specific recipients be self-sustaining.''

(6) *Description of significant alternatives that accomplish the stated objectives and minimize the impact on small entities.* In proposing the changes discussed in this NPRM, FMCSA attempted to comply with the Title 49 U.S.C. 13908 mandate that the agency implement a single, on-line Federal registration system, while also achieving its own goals: namely to streamline the overall motor carrier registration process, to enhance its fairness in terms of equalizing the filing burden among various groups of motor carriers, and most importantly, to improve industry safety.

With these (sometimes competing) objectives in mind, FMCSA considered several alternatives to the proposal discussed here, in an effort to minimize the potential new filing burden on small entities. For instance, FMCSA did consider exempting existing carriers from certain new filing requirements (via a grandfather clause), with the idea that it would minimize the compliance costs of this proposal. However, while reducing compliance costs (and thereby improving filing efficiency), it would also have reduced, not enhanced, the fairness of the motor carrier registration process relative to the status quo by placing higher burdens on new entrants than existing carriers. As such, it would have acted as a barrier to entry to small new entrants to the benefit of existing carriers. Conversely, the agency also considered a proposal to exempt new entrants from these requirements, but dismissed this on the grounds that it too would have reduced the fairness of the registration process. Additionally, either option would have reduced safety relative to the proposal discussed here. And exempting new entrants from various requirements would not have assisted small entities over larger ones, given that the composition of the new entrant carriers is similar to that of the overall existing population (namely, 80 percent have six or fewer power units).

The agency also considered removing the process agent designation filing requirement on the grounds that it was the most costly of the initiatives in this proposal. However, the agency dismissed this option because FMCSA division administrators felt that this particular filing requirement had the best potential to increase industry safety by improving the productivity of the agency's safety investigators (thereby allowing them to initiate additional compliance reviews). Additionally, the process agent designation filing requirement also enhances the fairness of the agency's registration process.

Lastly, in examining the overall burden of this proposal to small entities, the agency has countered some of its new (cost inducing) proposals with several actions that would reduce the filing burden of new entrant and existing motor carriers. The cost savings associated with these provisions would partially offset the compliance costs of this proposal, resulting in average total compliance costs of $48 per new entrant and $42 per existing carrier in any single year of the 10-year analysis period. Since such costs are expected to reduce pre-tax profits of small entities by less than 1 percent in a given year, the agency believes the impact on small entities has effectively been minimized with the current proposal, while trying to meet its stated goals and Congress' mandate.

Unfunded Mandates Reform Act of 1995

The Unfunded Mandates Reform Act of 1995 [Pub. L. 104–4; 2 U.S.C. 1532) requires each agency to assess the effects of its regulatory actions on State, local, and tribal governments and the private sector. Any agency promulgating a rule likely to result in a Federal mandate requiring expenditures by a State, local, or tribal government or by the private sector of $120.7 million or more in any one year must prepare a written statement incorporating various assessments, estimates, and descriptions

that are delineated in the Act. FMCSA has determined that the changes proposed in this rule would not have an impact of $120.7 million or more in any one year.

National Environmental Policy Act

The agency analyzed this final rule for the purpose of the National Environmental Policy Act of 1969 (NEPA) (42 U.S.C. 4321 *et seq.*) and determined under our environmental procedures Order 5610.1, issued March 1, 2004 (69 FR 9680), that this action is categorically excluded (CE) under Appendix 2, paragraphs 6.e and 6.h of the Order from further environmental documentation. The CE under Appendix 2, paragraph 6.e. relates to establishing regulations and actions taken pursuant to the regulations concerning applications for operating authority and certificates of registration. The CE under Appendix 2, paragraph 6h relates to establishing regulations and actions taken pursuant to the regulations implementing procedures to collect fees that will be charged for motor carrier registrations and insurance for the following activities: (1) Application filings; (2) Records searches; (3) Reviewing, copying, certifying, and related services. In addition, the agency believes that this action includes no extraordinary circumstances that would have any effect on the quality of the environment. Thus, the action does not require an environmental assessment or an environmental impact statement.

We have also analyzed this rule under the Clean Air Act, as amended (CAA), section 176(c) (42 U.S.C. 7401 *et seq.*), and implementing regulations promulgated by the Environmental Protection Agency. Approval of this action is exempt from the CAA's General conformity requirement since it involves policy development and civil enforcement activities, such as, investigations, inspections, examinations, and the training of law enforcement personnel. See 40 CFR 93.153(c)(2). It will not result in any emissions increase nor will it have any potential to result in emissions that are above the general conformity rule's *de minimis* emission threshold levels. Moreover, it is reasonably foreseeable that the rule change will not increase total CMV mileage, change the routing of CMVs, how CMVs operate or the CMV fleet-mix of motor carriers. This notice of proposed rulemaking was mandated under section 103 of ICCTA. It would consolidate and simplify the Federal registration processes and increase public accessibility to data about interstate and foreign motor carriers, property brokers, and freight forwarders.

Paperwork Reduction Act

Under the Paperwork Reduction Act of 1995 (PRA) (44 U.S.C. 3501–3520), a Federal agency must obtain approval from the Office of Management and Budget (OMB) for each collection of information it conducts, sponsors, or requires through regulations. FMCSA analyzed this proposal and determined its implementation would streamline the information collection burden on motor carriers, relative to the baseline, or current paperwork collection process. This includes making the FMCSA registration and insurance filing processes more efficient, implementing on-line filing of FMCSA requirements, where practical, as well as eliminating some outdated filing requirements. These benefits would be partially offset by the proposal to extend certain existing filing requirements to additional groups of carriers within the industry.

Streamlined registration process. FMCSA exercises both economic and safety oversight of for-hire non-exempt carriers. Currently, they must apply for operating authority (economic registration) and obtain a USDOT Number (safety registration) using separate paper forms. Under URS, the process would be streamlined so that a single application form would accomplish both economic and safety registration. Questions from various economic registration forms would be transferred to the MCSA–1, redundant questions removed, and most economic registration forms eliminated. For hire, non-exempt carriers no longer would need to determine which form to use.

Private and for-hire exempt carriers, because they are subject only to FMCSA safety oversight, would use the MCSA–1 form and disregard questions concerning economic registration. Elimination of economic registration forms would have no impact on this group of carriers.

Increases due to extending filing requirements to private and for-hire exempt carriers. Because private and exempt for-hire carriers are not currently required to designate a process agent, the agency assumes all of them would file proof of process agent designation in the first year after the NPRM becomes a final rule. Extending process agent filing requirements to existing private and for-hire exempt carriers would account for 319,000 of the proposed 339,305 hour burden increase. In subsequent years, the burden would substantially decrease.

Similarly, most existing private and for-hire exempt carriers would need to file proof of financial responsibility with the agency in the first year the rule becomes final. Current regulations require them to maintain this proof at their principal place of business for inspection during a compliance review, but there is no requirement to file with the agency. The requirement to file with the agency would increase the proposed burden hours by 18,560 hours in the first year. This increase is offset by a 4,927 burden hour reduction attributed to eliminating the cargo insurance filing requirement for a net increase of 13,633 hours.

Nonetheless, the agency believes the overall net result would be a more streamlined process for FMCSA registration for all motor carrier applicants.

This proposal would create a new information collection to cover the requirements in proposed FMCSA Form MCSA–1. There are also six currently-approved information collections that would be affected by this NPRM: OMB Control No. 2126–0013, titled ''Motor Carrier Identification Report,'' OMB Control No. 2126–0015, titled ''Designation of Agents, Motor Carriers, Brokers and Freight Forwarders,'' OMB Control No. 2126–0016, titled ''Revision of Licensing Application Forms, Application Procedures, and Corresponding Regulations,'' OMB Control No. 2126–0017, titled ''Financial Responsibility, Trucking, and Freight Forwarding,'' OMB Control No. 2126–0018, titled ''Request for Revocation of Authority Granted,'' and OMB Control No. 2126–0019, titled ''Application for Certificate of Registration for Foreign Motor Carriers and Foreign Motor Private Carriers.'' The total burden hours for the six currently approved information collections noted above are 208,190. Table 9 captures the current and proposed burden hours associated with the six currently approved information collections.

TABLE 9.—CURRENT AND PROPOSED INFORMATION COLLECTION BURDENS

OMB approval No.	Burden hours currently approved	Burden hours proposed [1]	Change
2126–NEW	0	176,743	176,743
2126–0013	74,896	2,457	(72,439)
2126–0015	5,000	344,305	339,305
2126–0016	59,001	2,043	(56,958)
2126–0017	45,225	58,858	13,633
2126–0018	250	0	(250)
2126–0019	23,818	0	(23,818)
Total	208,190	584,406	376,216

[1] The estimates in this column reflect first year burdens. Many of these information collections would significantly decrease in later years.

Following is an explanation of how each of the seven information collections shown above would be impacted by this proposal.

OMB Control No. 2126–NEW. The estimated paperwork burden for the proposed MCSA–1 would be 176,743 burden hours [102,993 hours for new entrants (47,535 new entrants × 2 hours, 10 minutes per form, divided by 60 minutes) + 73,750 hours for biennial updates (295,000 carriers required to file in year 1 × 15 minutes per form, divided by 60 minutes)].

OMB Control No. 2126–0013. In this proposal, all requirements under this information collection, except those related to Form MCS–150B and applications by certain Mexico-domiciled carriers, would be folded into OMB Control No. 2126–NEW (see above). The Form MCS–150B is used to apply for a Hazardous Materials Safety Permit and is not being incorporated under the Unified Registration System in this proposal. Of the 74,896 hours, 646 are attributed to the Form MCS–150B and 1,811 hours are attributed to the Form MCS–150 filed by Mexico-domiciled motor carriers registering to operate between Mexico and points in the United States beyond border commercial zones along the U.S.-Mexico international border. As a result, this information collection would result in a net decrease of 72,439 burden hours.

OMB Control No. 2126–0015. This information collection would increase by 339,309 burden hours (20,309 new entrant carriers × 1 hour) + (319,000 existing carriers × 1 hour). This is due to FMCSA's proposal to extend the service of process agent filing requirement to include private carriers and exempt for-hire carriers. Although process agents are not currently required for these carriers, it is common practice for them to designate a process agent. This estimate includes 20,309 new entrant carriers expected to file annually, and 319,000 existing carriers who must file process agent designations within year one of the rule. FMCSA conservatively assumes that no existing private and exempt for-hire motor carriers currently has a process agent and that all will file proof with FMCSA as a result of this NPRM.

Later year burdens would decrease to include approximately 20,309 new entrant carriers and 10% of existing carriers who make changes to the BOC–3 form annually.

OMB Control No. 2126–0016. Under this proposal, all requirements included in this information collection, except those relating to form OP–1(MX), would be folded into OMB Control No. 2126–NEW (see above). This information collection is currently approved at 59,001 burden hours. The 59,001 hours includes 2,043 burden hours associated with Mexico-domiciled carriers completing the form OP–1(MX) to operate between Mexico and points in the United States beyond border commercial zones along the U.S.-Mexico international border. Although currently approved by OMB, this portion of the burden is not currently being performed at this time and is not proposed to be incorporated under the Unified Registration System at this time. Thus, the information collection would result in a net decrease of 56,958.

OMB Control No. 2126–0017. Changes would be required to this information collection due to FMCSA's proposal to (1) require exempt for-hire motor carriers and private interstate motor carriers of hazardous materials to file proof of liability insurance with FMCSA, and to (2) eliminate ''cargo insurance filings'' and ''cancellation of cargo insurance filings.'' The proposal to require exempt for-hire motor carriers and private interstate motor carriers of hazardous materials to file proof of liability insurance with FMCSA would increase the annual burden hours by 18,560 [893 for new entrants (5,356 new entrant carriers × 10 minutes per carrier, divided by 60 minutes) + 17,667 for existing carriers filing in year one (106,000 existing carriers × 10 minutes per carrier filing, divided by 60 minutes)]. In later years, the burden estimate would decrease to include 5,356 new entrant carriers annually and 20% of existing carriers who annually change their insurance information.

The proposal to eliminate ''cargo insurance filings'' would decrease the annual burden hours by 4,927 [1,594 for new entrants (the elimination of 9,566 new entrant carriers × 10 minutes per form, divided by 60 minutes) + 3,333 for existing carriers making cargo insurance re-filings in year one (the elimination of 20,000 existing carriers × 10 minutes per form, divided by 60 minutes). This results in a net increase of 13,633 burden hours for this information collection (+18,560 − 4,927 = 13,633).

OMB Control No. 2126–0018. Under this proposal, the requirements included in this information collection would be folded into OMB Control No. 2126–NEW (see above), resulting in a net decrease of 250 burden hours.

OMB Control No. 2126–0019. Under this proposal, the requirements included in this information collection would be folded into OMB Control No. 2126–NEW (see above), resulting in a net decrease of 23,818 burden hours.

The proposals contained in this NPRM, affecting six currently-approved information collections and one new information collection, would result in a net increase of 376,216 burden hours in the agency's information collection budget.

FMCSA requests comments on whether the collection of information is necessary for the agency to meet its goal of reducing truck crashes, including: (1) Whether the information is useful to this goal; (2) the accuracy of the estimated information collection burden; (3) ways to enhance the quality, utility, and clarity of the information

collected; and (4) ways to minimize the information collection burden on respondents, including the use of automated collection techniques or other forms of information technology.

You may submit to the Office of Management and Budget (OMB) comments on the information collection burden addressed by this NPRM. The OMB must receive your comments by August 17, 2005. You must mail or hand deliver your comments to: Attention: Desk Officer for the Department of Transportation, Docket Library, Office of Information and Regulatory Affairs, Office of Management and Budget, Room 10102, 725 17th Street, NW., Washington, DC 20503.

Executive Order 12630 (Taking of Private Property)

This proposed rule would not effect a taking of private property or otherwise have taking implications under Executive Order 12630, Governmental Actions and Interference with Constitutionally Protected Property Rights.

Executive Order 12988 (Civil Justice Reform)

This proposed rule meets applicable standards in sections 3(a) and 3(b)(2) of Executive Order 12988, Civil Justice Reform, to minimize litigation, eliminate ambiguity, and reduce burden.

Executive Order 13045 (Protection of Children)

Executive Order 13045, ''Protection of Children from Environmental Health Risks and Safety Risks'' (April 23, 1997, 62 FR 19885), requires that agencies issuing economically significant rules, which also concern an environmental health or safety risk that an agency has reason to believe may disproportionately affect children, must include an evaluation of the environmental health and safety effects of the regulation on children. Section 5 of Executive Order 13045 directs an agency to submit for a covered regulatory action an evaluation of its environmental health or safety effects on children.

The agency has determined that this proposed rule is not a covered regulatory action as defined under Executive Order 13045. This determination is based upon the fact that this proposed rule is not economically significant under Executive Order 12866, because the changes proposed in this rule would not have an impact of $100 million or more in any one year. This proposal would not concern an environmental health risk or safety risk that would disproportionately affect children.

Executive Order 13132 (Federalism)

This proposed rule has been analyzed in accordance with the principles and criteria in Executive Order 13132, dated August 4, 1999 (64 FR 43255, August 10, 1999). FMCSA has determined that this proposal would not have significant Federalism implications or limit the policymaking discretion of the States.

Executive Order 12372 (Intergovernmental Review)

The regulations implementing Executive Order 12372 regarding intergovernmental consultation on Federal programs and activities do not apply to this program.

Executive Order 13211 (Energy Supply, Distribution, or Use)

FMCSA has analyzed this proposed rule under Executive Order 13211, Actions Concerning Regulations That Significantly Affect Energy Supply, Distribution, or Use. This proposal is not a significant energy action within the meaning of section 4(b) of the Executive Order. This proposal is a procedural action, is not economically significant, and will not have a significant adverse effect on the supply, distribution, or use of energy.

Privacy Act

Anyone is able to search the electronic form of all comments received into any of our dockets by the name of the individual submitting the comment (or signing the comment, if submitted on behalf of an association, business, labor union, etc.). You may review DOT's complete Privacy Act Statement in the **Federal Register** published on April 11, 2000 (Volume 65, Number 70; Pages 19477–78) or you may visit *http://dms.dot.gov*.

List of Subjects

49 CFR Parts 360

Administrative practice and procedure, Brokers, Buses, Freight forwarders, Hazardous materials transportation, Highway safety, Insurance, Motor carriers, Motor vehicle safety, Moving of household goods, Penalties, Reporting and recordkeeping requirements, Surety bonds.

49 CFR Part 365

Administrative practice and procedure, Brokers, Buses, Freight forwarders, Motor carriers, Moving of household goods.

49 CFR Part 366

Brokers, Motor carriers.

49 CFR Part 368

Administrative practice and procedure, Insurance, Motor carriers.

49 CFR Part 387

Buses, Freight, Freight forwarders, Hazardous materials transportation, Highway safety, Insurance, Intergovernmental relations, Motor carriers, Motor vehicle safety, Moving of household goods, Penalties, Reporting and recordkeeping requirements, Surety bonds.

For the reasons stated in the preamble, the Federal Motor Carrier Safety Administration proposes to amend title 49, Code of Federal Regulations, chapter III, subchapter B as set forth below:

1. Amend Chapter III by revising part 360 to read as follows:

PART 360—REGISTRATION

Subpart A—Registration Procedures

Sec.

360.1 What are the definitions of terms used in this part?
360.3 Who must register?
360.5 When must I register?
360.7 Where must I register?
360.9 What is involved in registering for a USDOT Number?
360.11 What general certifications must I make in my registration application?
360.13 How will FMCSA process my application?
360.15 For what reasons may FMCSA deny my application?
360.17 Can I appeal the denial of my application?
360.19 May I withdraw my application before processing has been completed?
360.21 If FMCSA rejects, denies or dismisses my application or revokes my registration for any reason, how do I start the process again?
360.23 When does my registration become permanent?
360.25 When must I update my registration?
360.27 What penalties may FMCSA impose if I fail to register or update my information or if I furnish misleading information?
360.29 What happens to my Motor Carrier (MC), Mexico-Domiciled Carrier (MX), or Freight Forwarder (FF) number after [24 months after the effective date of the final rule]?

Subpart B—How To Oppose a Request For Permanent USDOT Registration by a Motor Carrier, Broker or Freight Forwarder That Is Subject to 49 U.S.C. Chapter 139

360.101 Who may oppose a request for permanent USDOT registration by a motor carrier, broker or freight forwarder that is subject to 49 U.S.C. chapter 139?
360.103 When must a protest be filed?
360.105 What must be included in the protest?
360.107 How will FMCSA process the protest?

360.109 How do I withdraw my protest?

Subpart C—[Reserved]

Subpart D—Operations by Mexico-domiciled Motor Carriers in the Border Commercial Zones

360.301 Must I register?
360.302 What is involved in registering for a USDOT Number under subpart D of this part?
360.303 [Reserved]
360.305 How will FMCSA process my application?
360.307 What registration-related documents must I carry in my vehicle?

Subpart E—Fees for Registration and Related Services

360.401 What fees must I pay for registration and registration-related services?
360.403 What methods of payment will FMCSA accept for registration and registration-related services?
360.405 What is FMCSA policy regarding a dishonored charge card or credit card or electronic funds transfer (EFT)?
360.407 How do I request a reduced or waived fee?
360.409 What information must be included in my waiver request?
360.411 How will FMCSA process my waiver request?
360.413 May I obtain a refund of the filing fee or other related fees?
360.415 How do I make my insurance filing and what are the fees associated with the filing?
360.417 Must my insurer, surety company, or financial institution establish an account that will allow it to make insurance filings with FMCSA?
360.419 What are the fees for record searching, reviewing, copying, certifying, and related services?
360.421 How will FMCSA update user fees?

Subpart F—Special Requirements for Transportation of Household Goods

360.501 Must I offer arbitration to individual shippers if I register to provide household goods transportation services?
360.503 If I transport household goods, must I certify that I have a tariff in effect?

Subpart G—How To Designate Agents for Service of Process

360.601 Who must designate service of process agents?
360.603 How do I designate agents for service of process with FMCSA?
360.605 For which jurisdictions must I designate service of process agents?
360.607 What are the requirements for my designees?
360.609 May I make blanket designations?
360.611 How must I change or cancel a designation?

Subpart H—Cancellation, Reinstatement and Deactivation of USDOT Registration

360.701 What procedures must I follow to cancel my USDOT registration?
360.703 How will FMCSA process a request to cancel a USDOT registration?
360.705 For what other reasons will FMCSA deactivate my USDOT registration?
360.707 040 Can I reinstate an inactive USDOT registration?

Authority: 5 U.S.C. 553 and 559; 31 U.S.C. 9701; 49 U.S.C. 502, 503, 504, 13101, 13301, 13303, 13304, 13901–13908, 14504, 14708, 31136, 31138, 31139, 31142, 31144, 31145, 31301 *et seq.*, and 31501 *et seq.*, and 49 CFR 1.73.

Subpart A—Registration Procedures

§ 360.1 What are the definitions of terms used in this part?

The definitions for many terms used in this part are found in § 390.5 of this subchapter. Other terms used in this part are defined as follows:

(a) *Border commercial zones* means municipalities in the United States on the U.S.-Mexico international border or the commercial zones of such municipalities, as defined in 49 CFR part 372, and Dona Ana and Luna Counties in New Mexico.

(b)(1) *Freight forwarder* means an individual or entity engaged in interstate commerce that holds itself out to the general public (other than as a pipeline, rail, motor or water carrier) to provide transportation of property for compensation and in the ordinary course of its business:

(i) Assembles and consolidates, or provides for assembling and consolidating, shipments and performs or provides for break-bulk and distribution operations of the shipments;

(ii) Assumes responsibility for the transportation from the place of receipt to the place of destination; and

(iii) Uses for any part of the transportation a carrier subject to jurisdiction under 49 U.S.C. 10101 *et seq.*

(2) The term does not include a person using transportation of an air carrier subject to part A of 49 U.S.C. 40101 *et seq.*

(c) *FTA grantee* means a motor carrier of passengers that receives grants from the Federal Transit Administration either directly or through a third-party contract to provide passenger transportation in a transit service area under an agreement with a State or local government.

(d) *Interstate transportation* means transportation described at 49 U.S.C. 13501, and transportation in the United States otherwise exempt from the Secretary's jurisdiction under 49 U.S.C. 13506(b)(1).

(e) *Mexico-domiciled motor carrier* means a motor carrier of property or passengers whose principal place of business is located in Mexico.

(f) *Process agent* means a person who will accept legal and administrative filings and notices on behalf of the applicant.

(g) *Property broker* means an individual or entity engaged in interstate commerce that, for compensation, arranges or offers to arrange the transportation of property by a for-hire motor carrier that must register under 49 U.S.C. chapter 139. Motor carriers, or persons that are employees or bona fide agents of carriers, are not brokers within the meaning of this section when they arrange or offer to arrange the transportation of shipments which they are authorized to transport and which they have accepted and legally bound themselves to transport.

(h) *Protest* means a filing by a person wishing to oppose an application for registration filed under the provisions of 49 U.S.C. chapter 139.

(i) *Protestant* means a person filing a valid protest pursuant to subpart B of this part.

§ 360.3 Who must register?

(a) You must register with the Federal Motor Carrier Safety Administration and obtain a USDOT Number if you are:

(1) An interstate for-hire motor carrier of property or passengers;

(2) A private carrier of property or passengers operating in interstate commerce;

(3) A Mexico-domiciled motor carrier of property or passengers that wants to operate within the border commercial zones;

(4) A property broker engaged in interstate commerce; or

(5) A freight forwarder engaged in interstate commerce.

(b) If you perform operations as more than one type of entity, such as a carrier and a broker, you must register each entity with FMCSA and pay a filing fee for each registration.

(c) A motor carrier that is required to obtain a USDOT Number under 49 U.S.C. 13901 but fails to register its operations as required, or operates beyond the scope of its registration, is subject to applicable civil and/or criminal penalties and out-of-service orders.

§ 360.5 When must I register?

You must register and obtain your assigned USDOT registration number before you begin operations in interstate commerce.

§ 360.7 Where must I register?

(a) You must register either on the FMCSA Web site or by mail.

(b) You may file on-line, obtain the registration form and instructions from

any FMCSA field office, download them from the FMCSA Web site, or you may request the registration form by calling 1–800–832–5660 (or 001–800–832–5660 from Mexico).

(c) Assistance in completing the application is available from all FMCSA Service Centers and Division offices nationwide, or by calling 1–800–832–5660 (or 001–800–832–5660 from Mexico).

§ 360.9 What is involved in registering for a USDOT Number?

In order to be issued a USDOT Number, you must:

(a) Submit a complete and accurate Form MCSA–1—FMCSA Registration Form (USDOT Number Application) that is prepared in English and accompanied by fees. If you file a hard-copy application, it must have all required signatures.

(b) Ensure that your insurance company or other financial responsibility provider files with FMCSA the appropriate form(s) as prescribed under part 387 of this subchapter, if you are:

(1) An interstate for-hire motor carrier;

(2) A private carrier transporting hazardous materials in interstate commerce;

(3) A property broker; or

(4) A freight forwarder.

(c) File, or have a process service agent file on your behalf, a Form BOC–3—Designation of Agents—Motor Carriers, Brokers, and Freight Forwarders with FMCSA. You must either submit Form BOC–3 with your application or indicate on the Form MCSA–1 that you will use a process agent service that will submit the form electronically.

(d) Make the certification required under § 360.11.

(e) Meet applicable household goods requirements described under subpart F of this part.

(f) Have tariffs in effect to the extent applicable before beginning operations.

(g) Comply with subpart D of this part if you are a Mexico-domiciled motor carrier seeking authority to operate within the border commercial zones.

§ 360.11 What general certifications must I make in my registration application?

(a) If you operate a commercial motor vehicle, as defined in § 390.5 of this title, you must certify that you:

(1) Have a system in place to ensure compliance with all applicable requirements of the Federal Motor Carrier Safety Regulations and the Hazardous Materials Regulations, including driver qualifications, hours of service, alcohol and controlled substances testing, vehicle condition and maintenance, crash monitoring, and hazardous materials transportation;

(2) Are willing and able to provide the proposed service; and

(3) Will comply with all pertinent statutory and regulatory requirements; and

(4) Are not currently disqualified from operating a commercial motor vehicle in any State or the United States under the provisions of the Motor Carrier Safety Improvement Act of 1999.

(b) If you fail to make the necessary certifications, FMCSA will reject your application.

§ 360.13 How will FMCSA process my application?

The application process for motor carriers that are required to register under § 360.3 is comprised of three steps.

(a) *Step One—Initial Screening.* During the initial screening, FMCSA will:

(1) Issue a tracking number. This is a temporary number used only to track the application until a USDOT Number has been assigned. The tracking number must be used to make initial financial responsibility filings under part 387 of this title. The tracking number is also used when filing the Form BOC–3—Designation of Agents—Motor Carriers, Brokers and Freight Forwarders to designate an agent for service of process as required under subpart G of this part.

(2) Review your application for correctness, completeness, and adequacy of evidence;

(3) Correct minor errors without notifying you;

(4) Review your application for consistency with the agency safety fitness policy set forth in part 385 of this title;

(5) Validate the accuracy of information and certifications provided in the application.

(6) Reject your application for any of the following reasons:

(i) The application is not completed in English;

(ii) The application does not include the appropriate fees, as set forth in § 360.401;

(iii) The application is not complete as described under § 360.9;

(iv) You have an ''Unsatisfactory'' safety fitness rating when the application is filed;

(v) You own or control a company that is currently subject to an out-of-service order or has a current Unsatisfactory safety rating;

(vi) You previously owned or controlled a company that is currently subject to an out-of-service order or has a current Unsatisfactory rating that was imposed during your ownership or control.

(6) If you have not filed Form BOC–3 with your application because you will be using a process agent service, that service must file a list of agents for service of legal process in each State in which you intend to operate. The service must file this information with FMCSA within 90 days of the date that the application is submitted. If the required filing is not made within the 90-day period, FMCSA will dismiss your application, and the registration fee will not be refunded.

(7) If you are a for-hire motor carrier, a private carrier of hazardous materials, a broker or a freight forwarder, you must obtain the appropriate insurance, surety bond or trust fund as required in part 387 of this title. Your insurer, surety company or financial institution must electronically file evidence of coverage with FMCSA pursuant to § 360.415 within 90 days of the date that the application is submitted. If the required filing is not made within the 90-day period, FMCSA will dismiss your application, and the registration fee will not be refunded.

(8) If you are a Mexico-domiciled motor carrier that operates exclusively within the border commercial zones, you are not required to file evidence of financial responsibility with FMCSA. However, you must carry appropriate evidence of insurance in all vehicles operated in the United States as required under § 387.7(b)(3) of this title.

(b) *Step Two—Issuance of provisional registration.* (1) If your application meets all applicable requirements under step one of the application process described in paragraph (a) of this section, the agency will issue you a USDOT Number and provisional registration. You may begin operations under provisional registration if you are not subject to registration under 49 U.S.C. chapter 139. Provisional registration will be revoked if you do not successfully complete the other registration requirements.

(2) Freight forwarders and brokers are not issued provisional registration. If your registration application is not successfully opposed, registration is permanent when FMCSA issues it at the conclusion of the protest process prescribed under subpart B of this part.

(3) Registrations under 49 U.S.C. chapter 139, except Mexico-domiciled motor carriers operating exclusively within the border commercial zones, are subject to additional procedures under paragraph (c) of this section before provisional registration may be granted.

(4) After you are issued a provisional registration, you must successfully complete the New Entrant Safety Assurance Program under subpart D of part 385 of this title, which includes an 18-month monitoring program and a safety audit. Mexico-domiciled carriers operating exclusively within the border commercial zones are required to successfully complete a safety monitoring system under subpart B of part 385 of this title, instead of the New Entrant Safety Assurance Program.

(c) *Step Two(a)—Special procedure for certain 49 U.S.C. chapter 139 registrations.* (1) If you are subject to registration under 49 U.S.C. chapter 139 and your application passes the initial screening, FMCSA will publish a notice of your request for registration in the FMCSA Register to provide the public an opportunity to oppose pursuant to subpart B of this part. After publication, interested persons may request a copy of the application by contacting FMCSA.

(2) Applications by Mexico-domiciled motor carriers seeking to operate only within the border commercial zones may not be opposed, and notice of such applications for registration will not be published in the FMCSA Register. Private and exempt for-hire carriers are not subject to 49 U.S.C. chapter 139 and their applications for registration likewise may not be opposed, and notice of such applications for registration will not be published in the FMCSA Register.

(3) Once the application is filed, you may supplement evidence only with FMCSA approval. Amendments to the application generally are not permitted, but in appropriate instances may be entertained at the discretion of FMCSA.

(4) *Serving copies of pleadings.* An applicant must serve all pleadings and letters on FMCSA and all known participants in the proceeding, except that a reply to a motion need only be served on the moving party. A protestant need serve only FMCSA and applicant with pleadings or letters.

(5) *Replies to motions.* Replies to motions filed under this part are due within 5 days of the date the motion is filed at FMCSA.

(6) *Modified proceedings.* FMCSA will handle applications under paragraph (b)(2)(i) of this section using the modified procedures, if possible. The applicant and protestants send statements made under oath (verified statements) to each other and to FMCSA. There are no personal appearances or formal hearings.

(d) *Step Three—Issuance of permanent registration.* A motor carrier will be issued permanent registration only after complying with paragraph (b)(4) of this section.

§ 360.15 For what reasons may FMCSA deny my application?

After your application passes the initial screening described under § 360.13(a), FMCSA may deny the application if it determines, based on a valid protest filed under subpart B of this part or other evidence, that:

(a) You do not have a system in place to ensure compliance with all applicable requirements of the Federal Motor Carrier Safety Regulations and the Hazardous Materials Regulations, as applicable; or

(b) You are not willing and able to provide the proposed service and comply with all pertinent statutory and regulatory requirements.

§ 360.17 Can I appeal the denial of my application?

You have the right to appeal denial of your application. The appeal must specify in detail why FMCSA's decision to deny the application was wrong. The appeal must be a written request to the Director, Office of Information Management, and sent by mail, fax or electronically within 20 days of the date of the letter denying the application. The decision of the Director will be the final agency order.

§ 360.19 May I withdraw my application before processing has been completed?

You may withdraw your application before processing has been completed by notifying FMCSA in writing. Your registration fee will not be refunded.

§ 360.21 If FMCSA rejects, denies or dismisses my application or revokes my registration for any reason, how do I start the process again?

(a) To restart the registration process after rejection, denial or dismissal of your application or revocation of your registration, follow the application procedures in § 360.9 and pay the applicable registration fee under § 360.401.

(b) To restart the registration process after your registration has been revoked, you must wait until 30 days after the effective date of the revocation before reapplying for registration.

(c) If your registration has been cancelled or made inactive, see § 360.707 for the process to reinstate or reactivate your registration.

§ 360.23 When does my registration become permanent?

(a) Your motor carrier registration becomes permanent after you satisfactorily complete the new entrant safety assurance process in part 385, subpart D of this title, if you are subject to those requirements.

(b) Brokers and freight forwarders are not issued provisional registration. Their registration is permanent when FMCSA issues it at the conclusion of the publication and protest process described in subpart B of this part.

§ 360.25 When must I update my registration?

(a)(1) *Biennial update.* You must update your registration every 24 months as prescribed in this section by filing an updated Form MCSA–1 and completing only the data indicated in the form instructions.

(2) You must file the biennial registration update in the month indicated in the table to this section based upon the last digit of your USDOT Number.

TABLE TO § 360.25

USDOT number with the last digit of	Must file by last day of
1	January.
2	February.
3	March.
4	April.
5	May.
6	June.
7	July.
8	August.
9	September.
0	October.

(3) You must file the biennial registration update in the year based upon the next-to-last digit of the USDOT Number. If the next-to-last digit of your USDOT Number is odd-numbered (1, 3, 5, 7, or 9), you must file your update in every odd-numbered calendar year. If the next-to-last digit of the USDOT Number is even-numbered (0, 2, 4, 6, or 8), you must file your update in every even-numbered calendar year.

(4) If you fail to file the biennial registration update, furnish misleading information, or make a false statement on your biennial registration update, you are subject to the civil penalties prescribed in 49 U.S.C. 521(b)(2)(B) and 49 U.S.C. 14901(a).

(5) If you register in a State that participates in the PRISM program, you are not required to file biennial updates with FMCSA provided you file all the required information with the appropriate State office. You are also subject to the penalties under paragraph (a)(4) of this section for filing false or misleading information and are required to make the filings under paragraph (b) of this section.

(b) Change in legal name, form of business, or address of registered

entities. Changes are permitted in the legal name, form of business, or address of a registered entity, provided that there is no change in the ownership, management, or control. Within 20 days of any change in legal name, form of business, or address, you must file:

(1) A revised Form MCSA–1 reflecting the change(s); and

(2) A certification confirming that there has been no change in the ownership, management, or control of the registered entity.

(c) Failure to make the certification required in paragraph (b)(2) of this section, or making a false certification, will result in revocation of the USDOT Number 30 days after FMCSA notifies you that the certification is either missing or false, unless acceptable correction follows.

(d) If you receive notification as provided under paragraph (c) of this section that your USDOT Number will be revoked, you have the right to appeal. The appeal must specify in detail why FMCSA's decision to revoke your USDOT Number was in error. The appeal must be submitted in writing to the Director, Office of Information Management, and sent by mail, or FAX, or electronically, within 30 days of the date of the letter advising that your USDOT Number will be revoked. The decision of the Director will be the final agency order.

§ 360.27 What penalties may FMCSA impose if I fail to register or update my information or if I furnish misleading information?

You may be subject to civil and/or criminal penalties under 49 U.S.C. 521 and 49 U.S.C. chapter 149 for:

(a) Operating in interstate commerce before you have registered with FMCSA and have obtained a USDOT Number;

(b) Failing to update your registration biennially or every time you change your form of business; legal name, or address, as set forth in § 360.25 of this part;

(c) Continuing to operate in interstate commerce after cancellation or revocation of your registration; or

(d) Furnishing false or misleading information.

§ 360.29 What happens to my Motor Carrier (MC), Mexico-Domiciled Carrier (MX), or Freight Forwarder (FF) number after [24 months after the effective date of the final rule]?

(a) The Motor Carrier (MC), Mexico-domiciled Carrier (MX) and Freight Forwarder (FF) numbers will be cancelled [insert date twenty-four months after the effective date of this rule]. You will no longer be allowed to use them for identification purposes but will not be required to remove these markings from your commercial motor vehicle.

(b) Before [24 months after the effective date of the final rule], FMCSA will issue a USDOT Number to those entities that only have an MC, MX, or FF number. These entities include brokers, freight forwarders, and motor carriers exclusively operating vehicles below the thresholds of a ''commercial motor vehicle'' as defined in § 390.5 of this subchapter.

Subpart B—How To Oppose a Request for USDOT Registration by a Motor Carrier, Broker or Freight Forwarder That Is Subject to 49 U.S.C. Chapter 139

§ 360.101 Who may oppose a request for USDOT registration by a motor carrier, broker or freight forwarder that is subject to 49 U.S.C. chapter 139?

(a) Anyone may oppose an application of a for-hire motor carrier, broker or freight forwarder subject to 49 U.S.C. chapter 139 by filing a protest. A protest may not be filed against the application of a Mexico-domiciled motor carrier requesting to operate exclusively within the border commercial zones.

(b) A protest filed pursuant to paragraph (a) of this section must be based upon the grounds that the applicant does not meet safety fitness or other applicable FMCSA regulatory requirements.

§ 360.103 When must a protest be filed?

(a) The protest must be filed within 10 days after notice of the application appears in the on-line FMCSA Register, which is accessible from the FMCSA web site. The protest will be placed in the FMCSA docket and made available for public inspection. Failure to file a timely protest waives further participation in this aspect of the registration process.

(b) The Protestant must provide the applicant with a copy of the protest at the same time it is filed with FMCSA.

§ 360.105 What must be included in the protest?

(a) The protest must include evidence, information or documentation to substantiate the allegations providing the basis for the protest.

(b) The protest must be verified, as follows:

(1) If executed outside the United States:

''I declare (or certify, verify, or state) under penalty of perjury under the laws of the United States of America that the foregoing is true and correct.

Executed on (date).

(Signature)''.

(2) If executed within the United States, its territories, possessions, or commonwealths:

''I declare (or certify, verify, or state) under penalty of perjury that the foregoing is true and correct. Executed on (date).

(Signature)

(c) FMCSA may reject the protest if it does not substantially comply with applicable statutory or regulatory standards.

(d) Protests regarding registration will be accepted only when based on an allegation that the applicant fails or will fail to comply with the:

(1) Registration requirements;

(2) Federal Motor Carrier Safety Regulations;

(3) Hazardous Materials Regulations;

(4) Commercial Regulations;

(5) Safety fitness requirements; or

(6) Financial responsibility requirements.

§ 360.107 How will FMCSA process the protest?

(a) If a timely protest is filed, FMCSA will review any evidence and arguments made by the Protestant under §§ 360.103 and 360.105 of this part and provide the motor carrier with an opportunity to respond.

(b) The applicant's reply statement to the protest must be filed within 10 days of the service date of the protest with the Director, Office of Information Management. The decision of the Director will be the final agency order.

(c) The reply statement must not contain new evidence. It must only rebut or further explain matters previously raised.

(d) The reply statement need not be notarized or verified. You should understand that the oath in the application form applies to all evidence submitted in the application. Separate legal arguments by counsel need not be notarized or verified.

§ 360.109 How do I withdraw my protest?

To withdraw a protest, you must submit a written request to FMCSA by mail, fax or electronically.

Subpart C—[Reserved]

Subpart D—Operations by Mexico-domiciled Motor Carriers in the Border Commercial Zones

§ 360.301 Must I register?

(a) A Mexico-domiciled motor carrier must register with FMCSA to provide interstate transportation in the border commercial zones as defined in 49 U.S.C. 13902(c)(4)(A).

(b) Registration under this subpart permits only interstate transportation in

the border commercial zones. A carrier registered under this subpart who operates a vehicle beyond this area is subject to applicable penalties and out-of-service orders.

(c) Registration may be done either on the FMCSA web site or by mail. You may file on-line, obtain the registration form and instructions from any FMCSA field office, download them from the FMCSA web site, or you may call 1–800–832–5660 (or 001–800–832–5660 from Mexico). Assistance from English-speaking FMCSA personnel in completing the application is available from all FMCSA Service Centers and Division offices nationwide, or by calling 1–800–832–5660 (or 001–800–832–5660 from Mexico). Assistance from Spanish-speaking FMCSA personnel in completing the application is available only by calling 1–800–832–5660 (or 001–800–832–5660 from Mexico) and connecting to our Transborder office in Otay Mesa, California.

§ 360.302 What is involved in registering for a USDOT Number under subpart D of this part?

In order to be issued a USDOT Number, you must:

(a) Submit a complete and accurate Form MCSA–1—FMCSA Registration Form (USDOT Number Application) that is prepared in English and accompanied by fees;

(b) Meet the financial responsibility requirements under § 387.7(b)(3) of this title;

(c) File, or have a process service agent file on your behalf, a Form BOC–3—Designation of Agents—Motor Carriers, Brokers, and Freight Forwarders with FMCSA. You must either submit Form BOC–3 with your application or indicate on your application that you will use a process agent service that will submit the form electronically;

(d) Make the certifications under § 360.11;

(e) Meet household goods requirements described under subpart F of this part if applicable to your operations; and

(f) Have tariffs in effect to the extent applicable before beginning operations.

§ 360.303 [Reserved]

§ 360.305 How will FMCSA process my application?

The application process for Mexico-domiciled motor carriers of property that are required to register under § 360.301 is comprised of three steps.

(a) *Step One—Initial Screening.* During the initial screening, FMCSA will:

(1) Issue a tracking number. This is a temporary number used only to track the application until a USDOT Number has been assigned. The tracking number must be used when filing the Form BOC–3—Designation of Agents—Motor Carriers, Brokers and Freight Forwarders to designate an agent for service of process as required under subpart G of this part.

(2) Review the application for correctness, completeness, and adequacy of information. Non-material errors will be corrected without notice to the applicant.

(3) Validate the accuracy of information and certifications provided in the application against data maintained in databases of the governments of Mexico and the United States.

(4) Reject your application for any of the following reasons:

(i) The application is not completed in English;

(ii) The application did not include the appropriate fees, as set forth in § 360.401;

(iii) The application did not include all the required supporting documents and applicable certifications set forth in the instructions to the Form MCSA–1 or other information appropriate for your proposed operations.

(iv) You have an ''Unsatisfactory'' safety fitness rating when the application is filed;

(v) You own or control a company that is currently subject to an out-of-service order or has a current unsatisfactory safety rating;

(vi) You previously owned or controlled a company that is currently subject to an out-of-service order or has a current unsatisfactory rating that was imposed during your ownership or control.

(5) FMCSA will confirm that required Form BOC–3 filings have been made. If you have not filed Form BOC–3 with your application because you will be using a process agent service, that service must file a list of agents for service of legal process in each State in which you intend to operate. The service must file this information with FMCSA within 90 days of the date that the application is submitted.

(6) Require you to obtain the financial responsibility set forth in § 387.7(b)(3) of this title. You are not required to file evidence of financial responsibility with FMCSA, but must carry appropriate evidence of insurance in all vehicles operated in the United States.

(b) *Step Two—Issuance of provisional registration.* (1) You must successfully complete applicable requirements under Step One above.

(2) If your application and certifications demonstrate that your operations would be consistent with FMCSA safety fitness standards, you will be issued provisional registration. You will also be assigned a distinctive USDOT Number that authorizes you to provide interstate transportation between the United States and Mexico in the border commercial zones.

(3) After you are issued a provisional registration, you must successfully complete the safety monitoring system under subpart B of part 385 of this title.

(d) *Step Three—Issuance of permanent registration.* A motor carrier will be issued permanent registration only after complying with paragraph (b)(3) of this section.

§ 360.307 What registration-related documents must I carry in my vehicle?

A motor carrier of property registered to operate in the border commercial zones must maintain a copy of its registration and proof of financial responsibility as required under 49 CFR 387.7(b)(3) in any vehicle providing transportation service within the scope of the registration, and make such information available upon request to any Federal, State or local authorized inspector or enforcement officer.

Subpart E—Fees for Registration and Related Services

§ 360.401 What fees must I pay for registration and registration-related services?

When requesting registration or registration-related services, you are subject to the applicable fees listed in the table to this section. FTA grantees are not subject to the application and evidence of financial responsibility filing fees.

TABLE TO § 360.401—UNIFIED REGISTRATION SCHEDULE OF FEES

	You must pay FMCSA
REGISTRATION	
If you:.	
(a) Are subject to the registration requirements under § 360.3 of this part and are requesting a new application to operate in interstate commerce..	$200
OTHER SERVICES	
If you file a:.	
(b) Biennial update of registration.	No cost.
(c) Request for change of name, address, or form of business.	No cost.

TABLE TO § 360.401—UNIFIED REGISTRATION SCHEDULE OF FEES—Continued

	You must pay FMCSA
(d) Request for cancellation of registration.	No cost.
(e) Request for registration reinstatement.	100
(f) Designation of process agent	10

§ 360.403 What methods of payment will FMCSA accept for registration and registration-related services?

(a) FMCSA will only accept a charge card (*e.g.*, American Express™), credit card (*e.g.*, VISA™, MASTERCARD™, or DISCOVER™) or electronic funds transfer for payment of registration and registration-related services.

(b) If you or your agent fails to file the appropriate filing fee, your application will be rejected.

§ 360.405 What is FMCSA policy regarding a dishonored charge card or credit card or electronic funds transfer (EFT)?

If a bank or financial institution does not honor your charge card or credit card or EFT in payment of an FMCSA filing or service fee, FMCSA will notify you that:

(a) The agency has suspended further processing on the application until payment in full of FMCSA filing or service fees, and applicable FMCSA penalties for dishonored payments; and

(b) If you do not pay within 90 days, FMCSA will reject your application and filing.

§ 360.407 How do I request a reduced or waived fee?

(a) You may request a waiver or reduction of the fee prescribed in § 360.401 at the time you submit your application.

(b) FMCSA's general policy is not to waive or reduce filing fees.

(c) On request, FMCSA will waive filing fees for applications filed by a Federal government agency, or a State or local government entity. For purposes of this paragraph, the terms ''Federal government agency'' and ''government entity'' do not include a quasi-governmental corporation or government subsidized transportation company.

(d) FMCSA will consider other requests for waivers or fee reductions only in extraordinary situations.

§ 360.409 What information must be included in my waiver request?

The information provided in your request must:

(a) Demonstrate that the waiver or reduction of the fee is in the best interest of the public;

(b) Describe the impacts you could experience if we do not grant the waiver or reduction; and

(c) Include documentation supporting the basis for your request.

§ 360.411 How will FMCSA process my waiver request?

FMCSA will review your request and notify you whether it is granted after the agency accepts your application for processing.

§ 360.413 May I obtain a refund of the filing fee or other related fees?

No. Once your application is received by FMCSA, the agency will not refund filing or other service fees. This policy applies whether or not the agency grants, approves, denies, rejects before docketing, dismisses, or receives an applicant's request to withdraw its application.

§ 360.415 How do I make my insurance filing and what are the fees associated with the filing?

(a) Insurance filings must be made by your insurer, surety company, or financial institution as provided by part 387 of this subchapter.

(b) The fees for insurance filings are included in the table to this paragraph:

TABLE TO 360.415(B).—INSURANCE FILING FEES

(1) Financial Responsibility Service Provider filing evidence of minimum level of insurance, surety bond, or trust fund agreement	$10
(2) Qualification as a self-insurer for bodily injury, property damage, or environmental restoration	4,200
(3) Qualification as a self-insurer for cargo insurance	420
(3) Quarterly self-insurance monitoring filing	500
(4) Annual self-insurance monitoring filing	(1)

[1] No cost.

(c) *Currently registered exempt for-hire motor carriers and private motor carriers transporting hazardous materials in interstate commerce.* If you are a private motor carrier that transports hazardous materials in interstate commerce or an exempt for-hire motor carrier, subject to the financial responsibility requirements under part 387 of this title; and you had registered with FMCSA and been issued a valid USDOT Number before effective date of the final rule., your evidence of financial responsibility must be filed with FMCSA by [180 days after the effective date of the final rule.

§ 360.417 Must my insurer, surety company, or financial institution establish an account that will allow it to make insurance filings with FMCSA?

Insurers, surety companies, and financial institutions must obtain authorization to file insurance, surety, or trust fund information by registering with the FMCSA Enforcement Compliance Division.

§ 360.419 What are the fees for record searching, reviewing, copying, certifying, and related services?

Certifications and copies of public records and documents on file with the Federal Motor Carrier Safety Administration will be furnished on the following basis, pursuant to USDOT Freedom of Information Act regulations at 49 CFR part 7:

(a) Certificate of the Director, Office of Information Management, as to the authenticity of documents, $12.00;

(b) Service involved in locating records to be certified and determining their authenticity, including clerical and administrative work incidental thereto, at the rate of $21.00 per hour;

(c) Copies of the public documents, at the rate of $.80 per letter size or legal size exposure. A minimum charge of $5.00 will be made for this service; and

(d) Search and copying services requiring automated data processing (ADP), as follows:

(1) A fee of $50.00 per hour for professional staff time will be charged when it is required to fulfill a request for ADP data.

(2) The fee for computer searches will be set at the current rate for computer service. Information on those charges can be obtained from the Office of Information Management (MC-RIS).

(3) Printing shall be charged at the rate of $.10 per page of computer-generated output with a minimum charge of $1.00. There will also be a charge for the media provided (*e.g.*, CD ROMs) based on the agency's costs for such media.

§ 360.421 How will FMCSA update user fees?

(a) Each fee established in this subpart may be updated, as deemed necessary by FMCSA.

(b) *Publication and effective dates.* Notice of updated fees will be published in the **Federal Register** and will become effective 30 days after publication.

(c) *Payment of fees.* You must pay the fee applicable on the date you file or request services.

Subpart F—Special Requirements for Transportation of Household Goods

§ 360.501 Must I offer arbitration to individual shippers if I register to provide household goods transportation services?

(a) You must offer arbitration to individual shippers as a means of settling loss and damage claims against you if you register to provide household goods transportation services as a motor carrier or freight forwarder.

(b) You must affirm on your application that you will offer arbitration to individual shippers, in accordance with 49 U.S.C. 14708.

(c) You must provide the name and address of the entity that will administer your arbitration program.

(d) You must comply with part 375 of this subchapter if you transport household goods for individual shippers, as defined in § 375.1 of this subchapter.

§ 360.503 If I transport household goods, must I certify that I have a tariff in effect?

Yes. If you will be transporting household goods as a motor carrier or freight forwarder, you must certify that you have a tariff in effect and available for review upon request, in accordance with 49 U.S.C. 13702.

Subpart G—How To Designate Agents for Service of Process

§ 360.601 Who must designate service of process agents?

You must designate a service of process agent (a person upon whom court process may be served) following the rules in this subpart if you meet any of the following conditions:

(a) You are a motor carrier, property broker or freight forwarder engaged in interstate commerce.

(b) You are a motor carrier that operates in the United States in the course of transportation between points in a foreign country.

(c) You are a fiduciary of a motor carrier, property broker or freight forwarder. A fiduciary, as defined at § 387.319(a) of this title, must designate a service of process agent as of the moment of succession.

§ 360.603 How do I designate agents for service of process with FMCSA?

(a) *Currently registered entities.* If you have registered with FMCSA and have been issued a valid USDOT Number before *[effective date of the final rule.]* but do not already have a Form BOC–3—Designation of Agents—Motor Carriers, Brokers, and Freight Forwarders on file with FMCSA, you must file your designation of agent for service of process by [*180 days after the effective date of the final rule*].

(b) *New applicants for registration.* If you apply for USDOT Number registration after *[effective date of the final rule.],* you must file a Form BOC–3—Designation of Agents—Motor Carriers, Brokers and Freight Forwarders with the MCSA–1 application or indicate on the Form MCSA–1 that you will use a process agent service to submit the Form BOC–3 electronically. If you elect to use a process agent service to submit the Form BOC–3, the service must submit the form within 90 days of the date that the MCSA–1 application is filed with FMCSA.

(c) Only one completed current form may be on file with FMCSA. You must retain a copy of this designation at your principal place of business.

§ 360.605 For which jurisdictions must I designate service of process agents?

(a) *Motor carriers.* You must designate a service of process agent for each State in which you are authorized to operate and for each State through which you travel when operating as a motor carrier. You must retain a copy of these designations at your principal place of business.

(b) *Brokers.* When you operate as a property broker, you must designate a process agent for each State in which your offices are located, in which you write contracts, or in which you are authorized to write contracts.

(c) *Freight Forwarders.* When you operate as a freight forwarder, you must make a designation for each State in which you:

(1) Maintain offices;

(2) Write contracts;

(3) Assemble, consolidate, or provide for assembling and consolidating shipments;

(4) Perform or provide for break-bulk and distribution operations of the shipments;

(5) Assume responsibility for the transportation from the place of receipt to the place of destination; or

(6) Use any rail, water, pipeline, or motor carrier for any part of the transportation.

§ 360.607 What are the requirements for my designees?

(a) You must only designate persons (as defined at 49 U.S.C. 13102(16)) who:

(1) Reside in the State for which you designate them; or

(2) Maintain an office in the State for which you designate them; and

(3) Will accept service of process.

(b) If a State official is designated, evidence of his/her willingness to accept service of process must be furnished to FMCSA.

§ 360.609 May I make blanket designations?

(a) You are permitted to make blanket designations. Where an association or corporation has filed with the FMCSA a list of process agents for each State, you may make the required designations by using the following statement:

> Those persons named in the list of process agents on file with the Federal Motor Carrier Safety Administration by__ (Name of association or corporation) and any subsequently filed revisions thereof, for the States in which this carrier will operate in or through, except those States in which we have made individual designations.

(b) You must retain a copy of the blanket designation at your principal place of business.

§ 360.611 How must I change or cancel a designation?

(a) A designation may be canceled or changed only by a new designation except that, where a motor carrier, broker or freight forwarder ceases to be subject to § 360.605 in whole or in part for 1 year, designation is no longer required and may be canceled without making another designation.

(b) You must file the change using a new Form BOC–3—Designation of Agents—Motor Carriers, Brokers and Freight Forwarders. You may file the Form BOC–3 on-line at the FMCSA web site or by mail.

(c) A valid, up-to-date designation must be on file with FMCSA as long as you are subject to, in whole or in part, § 360.605. Changes in designation must be filed with FMCSA in such a manner that no lapses in designation occur.

(d) You must retain a copy of this change or cancellation at your principal place of business.

(e) A cancellation request will become effective 30 days after receipt of your Form BOC–3.

(f) You may not operate in any State for which you cancel your designation until you designate a new service agent for that State.

Subpart H—Cancellation, Reinstatement and Deactivation of USDOT Registration

§ 360.701 What procedures must I follow to cancel my USDOT registration?

(a) You must submit a request to cancel a USDOT Number by one of the following methods:

(1) Electronically on the FMCSA Web site at: *http://www.fmcsa.dot.gov*, or

(2) By mail.

(b) A USDOT Number cancellation request must include the following applicable certification statement:

(1) If executed outside the United States:

''I declare (or certify, verify, or state) under penalty of perjury under the laws of the United States of America that I have the authority to seek the requested cancellation of this USDOT Number.

Executed on (date).

(Signature)''.

or

(2) If executed within the United States, its territories, possessions, or commonwealths:

''I declare (or certify, verify, or state) under penalty of perjury that I have the authority to seek the requested cancellation of this USDOT Number.

Executed on (date).

(Signature)''.

§ 360.703 How will FMCSA process a request to cancel a USDOT registration?

(a) Upon receipt of the USDOT registration cancellation request, FMCSA will mark your registration as inactive and you will no longer be authorized to operate interstate commerce.

(b) If you operate in interstate commerce after canceling your USDOT registration, you will be subject to civil and/or criminal penalties under 49 U.S.C. 5 and 49 U.S.C. chapter 149.

§ 360.705 For what other reasons will FMCSA deactivate my USDOT registration?

(a) FMCSA will mark your registration as inactive and revoke your registration to operate in interstate commerce if:

(1) You fail to have on file with FMCSA evidence of the necessary financial responsibility, as required by part 387 of this subchapter; or

(2) You fail to have on file with FMCSA your agents for service of process, as required by subpart G of this part.

(b) If you operate in interstate commerce after FMCSA marks your registration inactive, you will be subject to civil and/or criminal penalties under 49 U.S.C. Chapters 5 and 149.

§ 360.707 Can I reinstate an inactive USDOT registration?

(a) You may reinstate registration marked inactive under this subpart under the following conditions:

(1) You request reinstatement within 2 years of the date your registration is marked inactive;

(2) You file, or cause to be filed with FMCSA, the necessary evidence of financial responsibility and designation of agents for service of process;

(3) You pay the reinstatement fee prescribed in § 360.401; and

(4) If you are a motor carrier, you will be considered a new entrant subject to the requirements of the New Entrant Safety Assurance Program in part 385, subpart D of this subchapter, unless you have previously completed the new entrant program requirements.

(b) If your registration has been marked inactive for more than 2 years and you wish to resume operations in interstate commerce:

(1) You must reapply to activate your previously-issued USDOT Number under the procedures in subpart A of this part.

(2) If you are a motor carrier, you will be considered a new entrant subject to the requirements of the New Entrant Safety Assurance Program in part 385, subpart D of this subchapter.

PART 365—[AMENDED]

2. The authority citation for part 365 continues to read as follows:

Authority: 5 U.S.C. 553 and 559; 16 U.S.C. 1456; 49 U.S.C. 13101, 13301, 13901–13906, 14708, 31138, and 31144; 49 CFR 1.73.

Subparts A Through D [Removed and Reserved]

3. Remove and reserve subparts A through D of part 365.

PART 366—[REMOVED AND RESERVED]

4. Remove and reserve part 366.

PART 368—[REMOVED AND RESERVED]

5. Remove and reserve part 368.

PART 387—MINIMUM LEVELS OF FINANCIAL RESPONSIBILITY FOR MOTOR CARRIERS

6. The authority citation for part 387 continues to read as follows:

Authority: 49 U.S.C. 13101, 13301, 13906, 14701, 31138, and 31139; and 49 CFR 1.73.

7. Amend § 387.33 by redesignating the unnumbered paragraph as paragraph (a), by adding the subheading ''General limits'' at the beginning of paragraph (a), and by adding paragraph (b) to read as follows:

§ 387.33 Financial responsibility, minimum levels.

(a) *General limits.* * * *

(b) *Limits applicable to transit service providers.* Notwithstanding the provisions of 49 CFR 387.33(a), the minimum level of financial responsibility for a motor vehicle used to provide transportation services within a transit service area located in more than one State under an agreement with a Federal, State, or local government funded, in whole or in part, with a grant under 49 U.S.C. 5307, 5310, or 5311, including transportation designed and carried out to meet the special needs of elderly individuals and individuals with disabilities, will be the highest level required for any of the States in which it operates. Transit service providers conducting such operations must register as for-hire passenger carriers under part 365 of this subchapter, identify the States in which they operate under the applicable grants, and certify on their registration documents that they have in effect financial responsibility levels in an amount equal to or greater than the highest level required by any of the States in which they are operating under a qualifying grant.

8. Amend § 387.301 by revising paragraphs (a)(1) and (b) to read as follows:

§ 387.301 Surety bond, certificate of insurance, or other securities.

(a) *Public liability.* (1) No for-hire motor carrier of property and passengers, and no private motor carrier of hazardous materials, shall engage in interstate commerce unless and until there shall have been filed with and accepted by FMCSA a certificate of insurance, surety bond, proof of qualification as self-insurer, or other securities or agreements in the amounts set forth in § 387.303, conditioned to pay any final judgment recovered against such motor carrier for bodily injuries to or the death of any person resulting from the negligent operation, maintenance or use of motor vehicles in transportation, or, in the case of motor carriers of property operating freight vehicles described in § 387.303(b)(2), for environmental restoration. No registration issued to a motor carrier transporting property or passengers by motor vehicle subject to Subtitle IV, part B, chapter 135 of title 49 of the U.S. Code shall remain in force unless the necessary evidence of public liability insurance coverage is continuously on file with FMCSA.

* * * * *

(b) *Household goods.* No motor carrier subject to Subtitle IV, part B, chapter 135 of title 49 of the U.S. Code that provides transportation of household goods, as defined in § 375.1(b) of this subchapter, shall engage in interstate commerce, nor shall any registration be issued to such a carrier or remain in force unless and until there shall have been filed with and accepted by FMCSA, a surety bond, certificate of insurance, proof of qualifications as a self-insurer, or other securities or agreements in the amounts prescribed in § 387.303, conditioned upon such carrier making compensation to shippers or consignees and coming into the possession of such carrier in

connection with its transportation services.

9. Amend § 387.303 by revising paragraphs (b)(2) and (c) to read as follows:

§ 387.303 Security for the protection of the public: Minimum limits

(a) * * *

(b)(1) * * *

(2) Motor carriers subject to § 387.301(a)(2) are required to have security for the required minimum limits as follows:

Kind of equipment	Commodity transported	Amount
(a) Freight vehicles of 10,000 pounds (4,536 kilograms) or more GVWR.	Property (non-hazardous)	$750,000
(b) Freight vehicles of 10,000 (4,536 kilograms) pounds or more GVWR.	Hazardous substances, as defined in § 171.8 of this title, transported in cargo tanks, portable tanks, or hopper-type vehicles with capacities in excess of 3,500 water gallons, or in bulk Class A or B explosives, poison gas, (Poison A), liquefied compressed gas or compressed gas, or highway route controlled quantity or radioactive materials as defined in § 173.455 of this title.	5,000,000
(c) Freight vehicles of 10,000 pounds (4,536 kilograms) or more GVWR.	Oil listed in § 172.101 of this title; hazardous waste, hazardous materials and hazardous substances defined in § 171.8 of this title and listed in § 172.101 of this title, but not mentioned in (b) above or (d) below.	1,000,000
(d) Freight vehicles under 10,000 pounds (4,536 kilograms) GVWR.	Any quantity of class A or B explosives; any quantity of poison gas (Poison A); or highway route controlled quantity radioactive materials as defined in § 173.455 of this title.	5,000,000

* * * * *

(c) Cargo liability. Motor carriers and freight forwarders of household goods are required to obtain and maintain insurance in the amount of $5,000 for loss of or damage to property carried on any one vehicle and $10,000 for loss of or damage to or aggregate losses or damages occurring at any one time or place.

10. Amend § 387.403 by revising paragraph (a) to read as follows:

§ 387.403 General requirements.

(a) *Cargo.* A household goods freight forwarder may not operate until it has filed with FMCSA an appropriate surety bond, certificate of insurance, qualifications as a self-insurer, or other securities or agreements, in the amounts prescribed in § 387.405, for loss of or damage to property.

* * * * *

PART 390—FEDERAL MOTOR CARRIER SAFETY REGULATIONS; GENERAL

11. The authority for part 390 continues to read as follows:

Authority: 49 U.S.C. 508, 13301, 13902, 31133, 31136, 31502, 31504, and sec. 204, Pub. L. 104–88, 109 Stat. 803, 941 (49 U.S.C. 701 note); sec. 114, Pub. L. 103–311, 108 Stat. 1673, 1677; sec. 217, Pub. L. 106–159, 113 Stat. 1748, 1767; and 49 CFR 1.73.

§ 390.19 [Removed and Reserved]

12. Remove and reserve § 390.19.

Issued on: May 11, 2005.

Annette M. Sandberg,

Administrator.

[FR Doc. 05–9692 Filed 5–11–05; 3:55 pm]

BILLING CODE 4910–EX–P

Federal Register

Thursday,
May 19, 2005

Part III

Department of Transportation

Federal Aviation Administration

14 CFR Part 93

Definition of Commuter Aircraft at Ronald Reagan Washington National Airport; Final Rule

DEPARTMENT OF TRANSPORTATION

Federal Aviation Administration

14 CFR Part 93

[Docket No. FAA–2005–21249; Amendment No. 93–84]

RIN 2120–AI58

Definition of Commuter Aircraft at Ronald Reagan Washington National Airport

AGENCY: Federal Aviation Administration, DOT.

ACTION: Final rule.

SUMMARY: The Federal Aviation Administration (FAA) is amending the regulations for aircraft permitted to operate in commuter slots at Ronald Reagan Washington National Airport (DCA). This change is necessary to conform the regulations to amendments set forth in the Vision 100—Century of Aviation Reauthorization Act of 2003 (Vision 100) Section 426, which increases the maximum seating capacity for aircraft used in commuter slots at DCA.

DATES: This final rule is effective May 19, 2005.

FOR FURTHER INFORMATION CONTACT: Judine Slaughter, Federal Aviation Administration, Office of Rulemaking, 800 Independence Avenue, SW., Washington, DC 20591; telephone (202) 493–4698; e-mail *judine.slaughter@faa.gov*.

SUPPLEMENTARY INFORMATION:

Availability of Final Rule

You can get an electronic copy using the Internet by:

(1) Searching the Department of Transportation's electronic Docket Management System (DMS) Web page (*http://dms.dot.gov/search*);

(2) Visiting the Office of Rulemaking's Web page at *http://www.faa.gov/avr/arm/index.cfm*; or

(3) Accessing the Government Printing Office's Web page at *http://www.gpoaccess.gov/fr/index.html.*

You can also get a copy by sending a request to the Federal Aviation Administration, Office of Rulemaking, ARM–1, 800 Independence Avenue, SW., Washington, DC 20591, or by calling (202) 267–9680. Make sure to identify the docket number, notice number, or amendment number of this rulemaking.

Small Business Regulatory Enforcement Fairness Act

The Small Business Regulatory Enforcement Fairness Act (SBREFA) of 1996 requires FAA to comply with small entity requests for information or advice about compliance with statutes and regulations within its jurisdiction. Therefore, any small entity that has a question regarding this document may contact their local FAA official, or the person listed under **FOR FURTHER INFORMATION CONTACT**. You can find out more about SBREFA on the Internet at our site, *http://www.faa.gov/avr/arm/sbrefa.cfm*.

Authority for This Rulemaking

The FAA's authority to issue rules regarding aviation safety is found in Title 49 of the United States Code. Subtitle I, Section 106 describes the authority of the FAA Administrator. Subtitle VII, Aviation Programs, describes in more detail the scope of the agency's authority.

The FAA publishes this rulemaking under the authority described in Subtitle VII, Part 93, Subpart K, Section 93.123—High Density Traffic Airports. Under that section, the FAA designates high-density traffic airports and air traffic rules for operating aircraft, other than helicopters, to or from those airports. This regulation is within the scope of that authority.

Background

The FAA published the High Density Traffic Airports Rule, 14 CFR part 93, subpart K, in 1968 to reduce delays at five congested airports: JFK International Airport, LaGuardia Airport, O'Hare International Airport, Ronald Reagan National Airport, and Newark International Airport (33 FR 17896; December 3, 1968).

On December 12, 2003, the president signed Vision 100—Century of Aviation Reauthorization Act, Public Law 108–176 (Vision 100). Section 426 of Vision 100 amended 49 U.S.C 41718 by adding:

> (f) Commuter Defined.—For purposes of aircraft operations at Ronald Reagan Washington National Airport under subpart K of part 93 of title 14, Code of Federal Regulations, the term 'commuters' means aircraft operations using aircraft having a certificated maximum seating capacity of 76 or less.''

This amendment to part 93 as a final rule incorporates changes mandated by the Vision 100 legislation.

Discussion of the Amendment

Ronald Reagan National (DCA) is designated as a high-density traffic airport in 14 CFR 93.123(a). The number of slots allocated to the commuter category, as used in paragraph (a) of this section, refers to the number of operations conducted by air carriers with:

- Turboprop aircraft having a certificated maximum passenger seating capacity of less than 75; or
- Turbojet aircraft having a certificated maximum passenger seating capacity of less than 56; or
- Any aircraft having a maximum payload capacity of less than 18,000 pounds, if used for cargo service in air transportation.

This rule amends § 93.123(c)(2), by removing the distinction at DCA between turbojet aircraft and turboprop aircraft. The amendment permits the operation of any aircraft in commuter slots that have a maximum passenger seating capacity of 76 or less. This amendment does not change the restrictions on maximum payload capacity for cargo operations using commuter slots at DCA or any other High Density Traffic Airports.

Paperwork Reduction Act

There are no new requirements for information collection associated with this amendment.

International Compatibility

In keeping with U.S. obligations under the Convention on International Civil Aviation, it is FAA policy to comply with International Civil Aviation Organization (ICAO) Standards and Recommended Practices to the maximum extent practicable. The FAA determined that there are no ICAO Standards and Recommended Practices that correspond to these proposed regulations.

Good Cause for Immediate Adoption

Section 553(b)(3)(B) of the Administrative Procedures Act (APA) (5 U.S.C. Section 553(b)(3)(B)) authorizes agencies to dispense with certain notice procedures for rules when they find ''good cause'' to do so. Under this section, good cause exists if the notice and opportunities for comment are ''impracticable, unnecessary, or contrary to the public interest.''

The FAA finds that notice and public comment to this final rule are impracticable, unnecessary, and contrary to the public interest, because this final rule adopts a Congressional mandate.

Regulatory Analyses

Executive Order 12866, Regulatory Planning and Review, directs the FAA to assess both the costs and benefits of a regulatory change. We do not propose or adopt a regulation unless we make a reasoned determination that the benefits of the intended regulation justify its costs. Our assessment of this rule indicates that its economic impact is

minimal. Since its costs and benefits do not make it a ''significant regulatory action'' as defined in the Order, we have not prepared a ''regulatory impact analysis.'' Similarly, we have not prepared a ''regulatory evaluation,'' which is the written cost/benefit analysis ordinarily required for all rulemaking proposals under the DOT Regulatory and Policies and Procedures. We do not need to do the latter analysis where the economic impact of a proposal is minimal.

Regulatory Flexibility Act

The Regulatory Flexibility Act (RFA) of 1980, 5 U.S.C. 601–612, directs the FAA to fit regulatory requirements to the scale of the business, organizations, and governmental jurisdictions subject to the regulation. We determine whether a proposed or final action will have a ''significant economic impact on a substantial number of small entities'' as defined in the Act. If we find that the action will have a significant impact, we complete a ''regulatory flexibility analysis.''

This final rule increases the maximum seating capacity for aircraft operated in commuter slots at DCA. Its economic impact is minimal. Therefore, we certify that this action will not have a significant economic impact on a substantial number of small entities.

Trade Impact Assessment

The Trade Agreements Act of 1979 prohibits Federal agencies from engaging in any standards or related activities that create unnecessary obstacles to the foreign commerce of the United States. Legitimate domestic objectives, such as safety, are not considered unnecessary obstacles. The statute also requires consideration of international standards and where appropriate, that they be the basis for U.S. standards. The FAA has assessed the potential effect of this rulemaking and has determined that it will not have any impact on international entities and thus has no international trade impact.

Unfunded Mandates Assessment

The Unfunded Mandates Reform Act of 1995 (the Act), enacted as Public Law 104–4 on March 22, 1995, is intended, among other things, to curb the practice of imposing unfunded Federal mandates on State, local, and tribal governments. Title II of the Act requires each Federal agency to prepare a written statement assessing the effects of any Federal mandate in a proposed or final agency rule that may result in a $100 million or more expenditure (adjusted annually for inflation) in any one year by State, local, and tribal governments, in the aggregate, or by the private sector; such a mandate is deemed to be a ''significant regulatory action.''

This final rule does not contain such a mandate. Therefore, the requirements of Title II of the Unfunded Mandates Reform Act of 1995 do not apply.

Executive Order 13132, Federalism

The FAA has analyzed this final rule under the principles and criteria of Executive Order 13132, Federalism. We determined that this action will not have a substantial direct effect on the States, or the relationship between the national Government and the States, or on the distribution of power and responsibilities among the various levels of government. Therefore, we determined that this final rule does not have federalism implications.

Environmental Analysis

FAA Order 1050.1E identifies FAA actions that are categorically excluded from preparation of an environmental assessment or environmental impact statement under the National Environmental Policy Act in the absence of extraordinary circumstances. The FAA has determined this rulemaking action qualifies for the categorical exclusion identified in paragraph 312(f) and involves no extraordinary circumstances.

Energy Impact

The energy impact of the notice has been assessed in accordance with the Energy Policy and Conservation Act (EPCA Pub. L. 94–163), as amended (42 U.S.C. 6362) and FAA Order 1053.1. It has been determined that the final rule is not a major regulatory action under the provisions of the EPCA.

List of Subjects in 14 CFR Part 93

Air traffic control, Airports, Alaska Navigation (air), Reporting and recordkeeping.

The Amendments

■ In consideration of the foregoing the Federal Aviation Administration amends chapter I of title 14 Code of Federal Regulations as follows:

PART 93—SPECIAL AIR TRAFFIC RULES

■ 1. The authority citation for part 93 continues to read as follows:

Authority: 49 U.S.C. 106(g), 40103, 40106, 40109, 40113, 44502, 44514, 44701, 44719, 46301.

■ 2. Revise § 93.123(c)(2) to read as follows:

§ 93.123 High density traffic airports.

* * * * *

(c) * * *

(2) The number of operations allocated to scheduled commuters, as used in paragraph (a) of this section, refers to the number of operations conducted by air carriers with turboprop and reciprocating engine aircraft having a certificated maximum passenger seating capacity of less than 75 or by turbojet aircraft having a certificated maximum passenger seating capacity of less than 56, or if used for cargo service in air transportation, with any aircraft having a maximum payload capacity of less than 18,000 pounds. For purposes of aircraft operations at Ronald Reagan Washington National Airport, the term ''commuters'' means aircraft operations using aircraft having a certificated maximum seating capacity of 76 or less.

* * * * *

Issued in Washington, DC, on May 11, 2005.

Marion Blakey,

Administrator.

[FR Doc. 05–9828 Filed 5–18–05; 8:45 am]

BILLING CODE 4910–13–P

Federal Register

Thursday,
May 19, 2005

Part IV

Department of Transportation

Federal Aviation Administration

14 CFR Part 150

Airport Noise Compatibility Planning; Final Rule

DEPARTMENT OF TRANSPORTATION

Federal Aviation Administration

14 CFR Part 150

[Docket No. FAA–2004–19158; Amendment No. 150–4]

RIN 2120–AI37

Airport Noise Compatibility Planning

AGENCY: Federal Aviation Administration, DOT.

ACTION: Disposition of comments.

SUMMARY: On September 24, 2004, the Federal Aviation Administration (FAA) published a final rule, with request for comments, to amend the regulations implementing airport noise compatibility planning. The amendment included revisions stemming from changes to the authorizing legislation that had not been incorporated into the implementing regulations. In addition, the final rule contained several minor, technical changes. This action is a summary and disposition of the comments received in response to that final rule.

ADDRESSES: You can view the complete document for the final rule by going to *http://dms.dot.gov.* You can also go to Room PL–401 of the Nassif Building (plaza level), 400 Seventh Street, SW., Washington, DC, between 9 a.m. and 5 p.m., Monday through Friday, except Federal holidays.

FOR FURTHER INFORMATION CONTACT: Victoria L. Catlett, APP–600, Office of Airport Planning and Programming, Federal Aviation Administration, 800 Independence Avenue, SW., Washington, DC 20591; telephone (202) 267–3263; facsimile (202) 267–8821; e-mail *vicki.catlett@faa.gov.*

SUPPLEMENTARY INFORMATION

Background

The regulations which prescribe the procedures, standards and methodologies governing the development, submission and review of airport noise exposure maps (NEMs) and airport noise compatibility programs are found at 14 CFR part 150 *et seq.* The underlying authorizing legislation for these regulations is found at 49 U.S.C. 47501 *et seq.* and was formerly known as the Aviation Safety and Noise Abatement Act of 1979 (ASNA) and 49 U.S.C. 2101 *et seq.*

The final rule entitled ''Airport Noise Compatibility Planning'' (69 FR 57622, September 24, 2004) amended part 150 to conform to the following changes in the authorizing legislation:

1. On December 30, 1987, Congress enacted the Airport and Airway Safety and Capacity Expansion Act of 1987, Public Law 100–223 (AASCE). Section 301 of AASCE amended the authorizing legislation to require airport sponsors to provide notice and an opportunity for a public hearing before filing noise compatibility programs with the FAA.

2. In 1994, the major Federal transportation laws enacted before July 1, 1993, were repealed, restated without substantive changes, and recodified in title 49 of the United States Code (''Revision of Title 49, United States Code Annotated, 'Transportation''', Public Law 103–272, July 25, 1994). Based on this recodification, the statutory citations in part 150 needed to be updated to reflect the repeal and replacement of ASNA.

3. On December 12, 2003, the President signed Vision 100—Century of Aviation Reauthorization Act, Public Law 108–176 (Vision 100). Section 324 of Vision 100 amended the authorizing legislation to clarify that sponsors should prepare NEMs for a forecast period that is at least five years in the future and to require revised NEMs when changes in the operation of the airport would significantly reduce noise over existing noncompatible land uses not reflected in either the existing or forecast NEM.

In addition, the final rule included several minor, technical revisions. First, it changed the minimum scale of NEMs to ease the FAA's implementation of Section 322 of Vision 100. Section 322 requires us to make noise exposure and land use information from NEMs available to the public on the Internet via our Web site. We determined that, given the amount of information contained in NEMs, it is necessary to enlarge the minimum scale to allow us to provide useful information on the Internet. The final rule also changed the locations where documents are available for inspection because several FAA regional offices have moved since 1989.

Discussion of Comments

The docket received two comments in response to the final rule. The first, from the Los Angeles International Airport/Community Noise Roundtable (the Roundtable), offers its support, stating the revisions to part 150 improve and support its efforts to mitigate noise impacts. The Roundtable believes allowing an airport sponsor to select an NEM forecast period longer than five years is desirable, stating this flexible forecast period is more likely to indicate significant future noise impacts when applying the FAA's day-night average sound level metric and incremental change criteria. Finally, the Roundtable believes posting noise exposure and land use information from NEMs on the FAA's Web site is an important step in keeping communities informed about current and projected future noise exposure.

The second comment, from the Raleigh Durham Airport Authority (RDAA), disagrees with the change that allows airport sponsors to select a flexible forecast period for their NEMs.

RDAA believes the forecast period for NEMs should remain at five years, and that airports should be given the option to produce a forecast NEM for an additional forecast period (for example, ten years) for the following reasons:

- RDAA notes that forecasts exceeding five years could prove inaccurate as noise impacts at airports do not remain constant (even if the airfield does) due to changes to the number of operations, the times of operations, the types of airplane equipment used and runway use.
- RDAA states that five and ten-year forecast periods for NEMs could help airports and the FAA identify areas of existing non-compatibility for noise mitigation within five years and areas of future non-compatibility for rezoning within ten years.
- RDAA believes that keeping the five-year forecast period could prevent debate between the FAA and an airport over the need to develop a revised NEM when noise exposure is changing a small percentage every year.

Based on the plain language in Vision 100 about NEM forecast periods, Congress clearly intended to make five years a minimum, but no longer a mandatory, forecast period. The FAA has amended § 150.21(a)(1) to allow for use of periods greater than five years pursuant to Vision 100. The ability to use longer forecast periods does not represent a significant change. The FAA previously permitted airport sponsors to prepare additional maps for forecast periods greater than five years and airport sponsors may still do so. The change to allow airport sponsors to select a forecast period longer than five years provides them flexibility. While airport sponsors are still required to select a forecast period of at least five years, they are not required to select a forecast period beyond five years. This flexibility reduces the possibility of conflicting information among various airport-related studies and enables airport sponsors to adjust the NEM forecast period where other related studies are using initial forecast periods longer than five years.

As for RDAA's concern that debates between the FAA and airports will

increase about whether small changes in noise require NEM updates, the FAA respectfully disagrees. Section 150.21(d) requires airport sponsors to update their NEMs if a change in the operation of the airport would create a significant increase in noise over noncompatible land uses not reflected on the NEM. Pursuant to Section 324 of Vision 100, airport sponsors are now also required to update their NEMs if changes in the operation of the airport would cause a significant reduction in noise over existing noncompatible land uses not reflected on an NEM. Experience has shown that it normally would take a substantial change in operations at an airport to trigger a 1.5 day-night average sound level increase or decrease that would warrant an NEM update.

Existing tools, including the Area Equivalent Method, are available to help airport sponsors monitor changes in the NEMs. The Area Equivalent Method is a mathematical procedure that provides an estimated noise contour area of a specific airport given the types of aircraft and the number of operations for each aircraft. Airport sponsors normally monitor the progress of their noise compatibility program implementation. Also, airport sponsors may crosscheck existing NEM information already on file with noise contours being generated for ongoing environmental or planning studies. All these methods should provide a relatively simple way to determine if the NEM on file with the FAA needs to be updated.

Conclusion

After consideration of the comments submitted in response to the final rule, the FAA has determined that no further rulemaking action is necessary. Amendment No. 1150–4 remains in effect as adopted.

Issued in Washington, DC, on May 10, 2005.

Marion C. Blakey,

Administrator.

[FR Doc. 05–9827 Filed 5–18–05; 8:45 am]

BILLING CODE 4910–13–P

Federal Register

Thursday,
May 19, 2005

Part V

Department of Health and Human Services

Centers for Medicare & Medicaid Services

42 CFR Part 424

Medicare Program; Prospective Payment System and Consolidated Billing for Skilled Nursing Facilities for FY 2006; Proposed Rule

DEPARTMENT OF HEALTH AND HUMAN SERVICES

Centers for Medicare & Medicaid Services

42 CFR Part 424

[CMS–1282–P]

RIN 0938–AN65

Medicare Program; Prospective Payment System and Consolidated Billing for Skilled Nursing Facilities for FY 2006

AGENCY: Centers for Medicare & Medicaid Services (CMS), HHS.

ACTION: Proposed rule.

SUMMARY: This proposed rule would update the payment rates used under the prospective payment system (PPS) for skilled nursing facilities (SNFs), for fiscal year (FY) 2006, as required by statute. Annual updates to the PPS rates are required by section 1888(e) of the Social Security Act (the Act), as amended by the Medicare, Medicaid, and SCHIP Balanced Budget Refinement Act of 1999 (BBRA), the Medicare, Medicaid, and State Children's Health Insurance Program (SCHIP) Benefits Improvement and Protection Act of 2000 (BIPA), and the Medicare Prescription Drug, Improvement, and Modernization Act of 2003 (MMA), relating to Medicare payments and consolidated billing for SNFs. As part of this year's annual update, we are proposing to introduce refinements in the Resource Utilization Groups, version III (RUG–III), the case-mix classification system used under the SNF PPS.

DATES: To be assured consideration, comments must be received at one of the addresses provided below, no later than 5 p.m. on July 12, 2005.

ADDRESSES: In commenting, please refer to file code CMS–1282–P. Because of staff and resource limitations, we cannot accept comments by facsimile (FAX) transmission.

You may submit comments in one of three ways (no duplicates, please):

1. *Electronically.* You may submit electronic comments on specific issues in this regulation to *http://www.cms.hhs.gov/regulations/ecomments.* (Attachments should be in Microsoft Word, WordPerfect, or Excel; however, we prefer Microsoft Word.)

2. *By mail.* You may mail written comments (one original and two copies) to the following address ONLY: Centers for Medicare & Medicaid Services, Department of Health and Human Services, Attention: CMS–1282–P, P.O. Box 8016, Baltimore, MD 21244–8016.

Please allow sufficient time for mailed comments to be received before the close of the comment period.

3. *By hand or courier.* If you prefer, you may deliver (by hand or courier) your written comments (one original and two copies) before the close of the comment period to one of the following addresses. If you intend to deliver your comments to the Baltimore, Maryland address, please call telephone number (410) 786–9994 in advance to schedule your arrival with one of our staff members. Room 445–G, Hubert H. Humphrey Building, 200 Independence Avenue, SW., Washington, DC 20201; or 7500 Security Boulevard, Baltimore, MD 21244–1850.

(Because access to the interior of the HHH Building is not readily available to persons without Federal Government identification, commenters are encouraged to leave their comments in the CMS drop slots located in the main lobby of the building. A stamp-in clock is available for persons wishing to retain a proof of filing by stamping in and retaining an extra copy of the comments being filed.)

Comments mailed to the addresses indicated as appropriate for hand or courier delivery may be delayed and received after the comment period.

Submission of comments on paperwork requirements. You may submit comments on this document's paperwork requirements by mailing your comments to the addresses provided at the end of the ''Collection of Information Requirements'' section in this document.

For information on viewing public comments, see the beginning of the **SUPPLEMENTARY INFORMATION** section.

FOR FURTHER INFORMATION CONTACT: Ellen Gay, (410) 786–4528 (for information related to the case-mix classification methodology, and for information related to swing-bed providers).

Jeanette Kranacs, (410) 786–9385 (for information related to the development of the payment rates, and for information related to the wage index).

Bill Ullman, (410) 786–5667 (for information related to coverage requirements, level of care determinations, consolidated billing, and general information).

SUPPLEMENTARY INFORMATION:

Submitting Comments: We welcome comments from the public on all issues set forth in this rule to assist us in fully considering issues and developing policies. You can assist us by referencing the file code CMS–1282–P and the specific ''issue identifier'' that precedes the section on which you choose to comment.

Inspection of Public Comments: All comments received before the close of the comment period are available for viewing by the public, including any personally identifiable or confidential business information that is included in a comment. CMS posts all electronic comments received before the close of the comment period on its public Web site as soon as possible after they have been received. Hard copy comments received timely will be available for public inspection as they are received, generally beginning approximately 3 weeks after publication of a document, at the headquarters of the Centers for Medicare & Medicaid Services, 7500 Security Boulevard, Baltimore, Maryland 21244, Monday through Friday of each week from 8:30 a.m. to 4 p.m. To schedule an appointment to view public comments, phone 1–800–743–3951.

To assist readers in referencing sections contained in this document, we are providing the following Table of Contents.

Table of Contents

I. Background
A. Current System for Payment of Skilled Nursing Facility Services Under Part A of the Medicare Program
B. Requirements of the Balanced Budget Act of 1997 (the BBA) for Updating the Prospective Payment System for Skilled Nursing Facilities
C. The Medicare, Medicaid, and SCHIP Balanced Budget Refinement Act of 1999 (the BBRA)
D. The Medicare, Medicaid, and SCHIP Benefits Improvement and Protection Act of 2000 (the BIPA)
E. The Medicare Prescription Drug, Improvement, and Modernization Act of 2003 (the MMA)
F. Skilled Nursing Facility Prospective Payment—General Overview
1. Payment Provisions—Federal Rates
2. Payment Provisions—Initial Transition Period
G. Use of the Skilled Nursing Facility Market Basket Index
II. Update of Payment Rates Under the Prospective Payment System for Skilled Nursing Facilities
A. Federal Prospective Payment System
1. Costs and Services Covered by the Federal Rates
2. Methodology Used for the Calculation of the Federal Rates
B. Case-Mix Adjustment and Other Clinical Issues
1. Background
2. Case-Mix Refinement Research
a. Data Sources and Analyses
b. Constructing the New RUG–III Groups
c. Development of the Case-Mix Indexes
3. Proposed Refinements to the Case-Mix Classification System
4. Implementation Issues

5. Assessment Timeframes
6. SNF Certifications and Recertifications Performed by Nurse Practitioners and Clinical Nurse Specialists
7. Concurrent Therapy
C. Wage Index Adjustment to Federal Rates
D. Proposed Area Wage Index
1. Proposed Revision of SNF PPS Geographic Classifications
2. Current SNF PPS Labor Market Areas Based on MSAs
3. Core-Based Statistical Areas
4. Proposed Revisions to the SNF PPS Labor Market Areas
a. New England MSAs
b. Metropolitan Divisions
c. Micropolitan Areas
5. Implementation of the Revised Labor Market Areas
6. Wage Index Data
E. Updates to the Federal Rates
F. Relationship of RUG–III Classification System to Existing Skilled Nursing Facility Level-of-Care Criteria
G. Initial Three-Year Transition Period From Facility Specific to Federal Rates
H. Example of Computation of Adjusted PPS Rates and SNF Payment
III. The Skilled Nursing Facility Market Basket Index
A. Use of the Skilled Nursing Facility Market Basket Percentage
B. Market Basket Forecast Error Adjustment
C. Federal Rate Update Factor
IV. Consolidated Billing
V. Application of the SNF PPS to SNF Services Furnished by Swing-Bed Hospitals
VI. Qualifying Three-Day Inpatient Hospital Stay Requirement
VII. Provisions of the Proposed Rule
VIII. Collection of Information Requirements
IX. Regulatory Impact Analysis
A. Overall Impact
B. Anticipated Effects
C. Accounting Statement
D. Alternatives Considered
Regulation Text
Addendum: Table 8 (Proposed Wage Index For Urban Areas Based On Core-Based Statistical Area (CBSA) Labor Market Areas); Table 9 (Proposed Wage Index For Rural Areas Based On CBSA Labor Market Areas); and Table A (Metropolitan Statistical Area (MSA)/ CBSA Crosswalk)

In addition, because of the many terms to which we refer by abbreviation in this proposed rule, we are listing these abbreviations and their corresponding terms in alphabetical order below:

ADL Activity of Daily Living
AHE Average Hourly Earnings
ARD Assessment Reference Date
BBA Balanced Budget Act of 1997, Pub. L. 105–33
BBRA Medicare, Medicaid and SCHIP Balanced Budget Refinement Act of 1999, Pub. L. 106–113
BEA (U.S. Department of Commerce) Bureau of Economic Analysis
BIPA Medicare, Medicaid, and SCHIP Benefits Improvement and Protection Act of 2000, Pub. L. 106–554
CAH Critical Access Hospital
CBSA Core-Based Statistical Area
CFR Code of Federal Regulations
CMS Centers for Medicare & Medicaid Services
CMSA Consolidated Metropolitan Statistical Area
CPT (Physicians') Current Procedural Terminology
DRG Diagnosis Related Group
FI Fiscal Intermediary
FR Federal Register
FY Fiscal Year
GAO Government Accountability Office
HCPCS Healthcare Common Procedure Coding System
ICD–9–CM International Classification of Diseases, Ninth Edition, Clinical Modification
IFC Interim Final Rule with Comment Period
MDS Minimum Data Set
MEDPAR Medicare Provider Analysis and Review File
MIP Medicare Integrity Program
MMA Medicare Prescription Drug, Improvement, and Modernization Act of 2003, Pub. L. 108–173
MSA Metropolitan Statistical Area
NECMA New England County Metropolitan Area
OIG Office of Inspector General
OMRA Other Medicare Required Assessment
PCE Personal Care Expenditures
PMSA Primary Metropolitan Statistical Area
PPI Producer Price Index
PPS Prospective Payment System
PRM Provider Reimbursement Manual
RAI Resident Assessment Instrument
RAP Resident Assessment Protocol
RAVEN Resident Assessment Validation Entry
RFA Regulatory Flexibility Act, Pub. L. 96–354
RIA Regulatory Impact Analysis
RUG Resource Utilization Groups
SCHIP State Children's Health Insurance Program
SNF Skilled Nursing Facility
STM Staff Time Measure
UMRA Unfunded Mandates Reform Act, Pub. L. 104–4

I. Background

On July 30, 2004, we published a notice in the **Federal Register** (69 FR 45775) that set forth updates to the payment rates used under the prospective payment system (PPS) for skilled nursing facilities (SNFs), for fiscal year (FY) 2005. Annual updates to the PPS rates are required by section 1888(e) of the Social Security Act (the Act), as amended by the Medicare, Medicaid, and SCHIP Balanced Budget Refinement Act of 1999 (the BBRA) and the Medicare, Medicaid, and SCHIP Benefits Improvement and Protection Act of 2000 (the BIPA), relating to Medicare payments and consolidated billing for SNFs.

A. Current System for Payment of Skilled Nursing Facility Services Under Part A of the Medicare Program

Section 4432 of the Balanced Budget Act of 1997 (the BBA) amended section 1888 of the Act to provide for the implementation of a per diem PPS for SNFs, covering all costs (routine, ancillary, and capital-related) of covered SNF services furnished to Medicare beneficiaries under Part A of the Medicare program, effective for cost reporting periods beginning on or after July 1, 1998. In this proposed rule, we propose to update the per diem payment rates for SNFs for FY 2006. Major elements of the SNF PPS include:

• *Rates.* Per diem Federal rates were established for urban and rural areas using allowable costs from FY 1995 cost reports. These rates also included an estimate of the cost of services that, before July 1, 1998, had been paid under Part B but were furnished to Medicare beneficiaries in a SNF during a Part A covered stay. The rates were adjusted annually using a SNF market basket index. Rates were case-mix adjusted using a classification system (Resource Utilization Groups, version III (RUG–III)) based on beneficiary assessments (using the Minimum Data Set (MDS) 2.0). The rates were also adjusted by the hospital wage index to account for geographic variation in wages. (In section II.C of this preamble, we discuss the wage index adjustment in detail.)

Correction notices were published in the **Federal Register** on October 7, 2004 (69 FR 60158) and on December 30, 2004 (69 FR 78445), announcing corrections to several of the wage factors. Additionally, as noted in sections I.C through I.E of this proposed rule, section 101 of the BBRA, sections 311, 312, and 314 of the BIPA, and section 511 of the MMA also affect the payment rate.

• *Transition.* The SNF PPS included an initial 3-year, phased transition that blended a facility-specific payment rate with the Federal case-mix adjusted rate. For each cost reporting period after a facility migrated to the new system, the facility-specific portion of the blend decreased and the Federal portion increased in 25 percentage point increments. For most facilities, the facility-specific rate was based on allowable costs from FY 1995; however, since the last year of the transition was FY 2001, all facilities were paid at the full Federal rate by the following fiscal year (FY 2002). Therefore, as discussed in section I.F.2 of this proposed rule, we are no longer including adjustment

factors related to facility-specific rates for the coming fiscal year.

• *Coverage.* The establishment of the SNF PPS did not change Medicare's fundamental requirements for SNF coverage. However, because RUG–III classification is based, in part, on the beneficiary's need for skilled nursing care and therapy, we have attempted, where possible, to coordinate claims review procedures involving level of care determinations with the outputs of beneficiary assessment and RUG–III classifying activities. We discuss this coordination in greater detail in section II.F of this preamble. Moreover, the Part A SNF benefit has not only level of care requirements, but also a set of technical, or ''posthospital'' requirements as well. In section VI of this preamble, we discuss one aspect of the technical requirement for a qualifying prior inpatient hospital stay of at least 3 consecutive days, on which we invite comment.

• *Consolidated Billing.* The SNF PPS includes a consolidated billing provision (described in greater detail in section IV of this proposed rule) that requires a SNF to submit consolidated Medicare bills for almost all of the services that its residents receive during the course of a covered Part A stay. (In addition, this provision places the Medicare billing responsibility for physical, occupational, and speech-language therapy that the resident receives during a noncovered stay with the SNF.) The statute excludes from the consolidated billing provision a small list of services—primarily those of physicians and certain other types of practitioners—which remain separately billable to Part B by the outside entity that furnishes them.

• *Application of the SNF PPS to SNF services furnished by swing-bed hospitals.* Section 1883 of the Act permits certain small, rural hospitals to enter into a Medicare swing-bed agreement, under which the hospital can use its beds to provide either acute or SNF care, as needed. For critical access hospitals (CAHs), Part A pays on a reasonable cost basis for SNF services furnished under a swing-bed agreement. However, in accordance with section 1888(e)(7) of the Act, those swing-bed SNF services furnished by non-CAH rural hospitals are paid under the SNF PPS, effective with cost reporting periods beginning on or after July 1, 2002. A more detailed discussion of this provision appears in section V of this proposed rule.

B. Requirements of the Balanced Budget Act of 1997 (the BBA) for Updating the Prospective Payment System for Skilled Nursing Facilities

Section 1888(e)(4)(H) of the Act requires that we publish in the **Federal Register:**

1. The unadjusted Federal per diem rates to be applied to days of covered SNF services furnished during the FY.
2. The case-mix classification system to be applied with respect to these services during the FY.
3. The factors to be applied in making the area wage adjustment with respect to these services.

In the July 30, 1999 final rule (64 FR 41670), we indicated that we would announce any changes to the guidelines for Medicare level of care determinations related to modifications in the RUG–III classification structure (see section II.F of this proposed rule).

Along with a number of other revisions discussed later in this preamble, this proposed rule provides the annual updates to the Federal rates as mandated by the Act.

C. The Medicare, Medicaid, and SCHIP Balanced Budget Refinement Act of 1999 (the BBRA)

There were several provisions in the BBRA that resulted in adjustments to the SNF PPS. These provisions were described in detail in the final rule that we published in the **Federal Register** on July 31, 2000 (65 FR 46770). In particular, section 101 of the BBRA provided for a temporary 20 percent increase in the per diem adjusted payment rates for 15 specified RUG–III groups (SE3, SE2, SE1, SSC, SSB, SSA, CC2, CC1, CB2, CB1, CA2, CA1, RHC, RMC, and RMB). Under the law, this temporary increase remains in effect until the later of October 1, 2000, or the implementation of case-mix refinements in the PPS. A discussion of the case-mix refinements that we are proposing to implement appears in section II.B of this proposed rule. Section 101 also included a 4 percent across-the-board increase in the adjusted Federal per diem payment rates each year for FYs 2001 and 2002, exclusive of the 20 percent increase.

We included further information on all of the provisions of the BBRA that affect the SNF PPS in Program Memoranda A–99–53 and A–99–61 (December 1999), and Program Memorandum AB–00–18 (March 2000). In addition, for swing-bed hospitals with more than 49 (but less than 100) beds, section 408 of the BBRA provided for the repeal of certain statutory restrictions on length of stay and aggregate payment for patient days, effective with the end of the SNF PPS transition period described in section 1888(e)(2)(E) of the Act. In the July 31, 2001 final rule (66 FR 39562), we made conforming changes to the regulations in 42 CFR section 413.114(d), effective for services furnished in cost reporting periods beginning on or after July 1, 2002, to reflect section 408 of the BBRA.

D. The Medicare, Medicaid, and SCHIP Benefits Improvement and Protection Act of 2000 (the BIPA)

The BIPA also included several provisions that resulted in adjustments to the PPS for SNFs. These provisions were described in detail in the final rule that we published in the **Federal Register** on July 31, 2001 (66 FR 39562) as follows:

• Section 203 of the BIPA exempted critical access hospital (CAH) swing-beds from the SNF PPS; we included further information on this provision in Program Memorandum A–01–09 (January 16, 2001).

• Section 311 of the BIPA eliminated the 1 percent reduction in the SNF market basket that the statutory update formula had previously specified for FY 2001, and changed the 1 percent reduction specified for FYs 2002 and 2003 to a 0.5 percent reduction. As discussed in section II.B of this proposed rule, this provision also required us to conduct a study of alternative case-mix classification systems for the SNF PPS, and to submit a report to the Congress on the results of the study.

• Section 312 of the BIPA provided for a temporary 16.66 percent increase in the nursing component of the case-mix adjusted Federal rate for services furnished on or after April 1, 2001, and before October 1, 2002. This section also required the Government Accountability Office (GAO) to conduct an audit of SNF nursing staff ratios and submit a report to the Congress on whether the temporary increase in the nursing component should be continued. GAO issued this report (GAO–03–176) in November 2002.

• Section 313 of the BIPA repealed the consolidated billing requirement for services (other than physical, occupational, and speech-language therapy) furnished to SNF residents during noncovered stays, effective January 1, 2001.

• Section 314 of the BIPA adjusted the payment rates for all of the 14 rehabilitation RUGs (RUC, RUB, RUA, RVC, RVB, RVA, RHC, RHB, RHA, RMC, RMB, RMA, RLB, and RLA), in order to correct an anomaly under which the existing payment rates for three

particular rehabilitation RUGs—RHC, RMC, and RMB—were higher than the rates for some other, more intensive rehabilitation RUGs. Under the BIPA adjustment, the temporary increase that section 101(a) of the BBRA had applied to the RHC, RMC, and RMB rehabilitation RUGs was revised from 20 percent to 6.7 percent, and the BIPA adjustment also applied this temporary 6.7 percent increase to each of the other 11 rehabilitation RUGs.

- Section 315 of the BIPA authorized us to establish a geographic reclassification procedure that is specific to SNFs, but only after collecting the data necessary to establish a SNF wage index that is based on wage data from nursing homes.

We included further information on several of these provisions in Program Memorandum A–01–08 (January 16, 2001).

E. The Medicare Prescription Drug, Improvement, and Modernization Act of 2003 (the MMA)

A provision of the Medicare Prescription Drug, Improvement, and Modernization Act of 2003 (MMA) resulted in a further adjustment to the PPS for SNFs. Specifically, section 511 of the MMA amended paragraph (12) of section 1888(e) of the Act to provide for a temporary 128 percent increase in the PPS per diem payment for any SNF resident with Acquired Immune Deficiency Syndrome (AIDS), effective with services furnished on or after October 1, 2004. As discussed in Transmittal #160 (Change Request #3291, April 30, 2004), this add-on applies to claims with diagnosis code 042. Like the temporary add-on payments created by section 101(a) of the BBRA (as amended by section 314 of the BIPA), this special AIDS add-on was not intended to remain in effect indefinitely. As amended by section 511 of the MMA, section 1888(e)(12)(B) of the Act specifies that this temporary increase for patients with AIDS is to remain in effect only until ''* * * such date as the Secretary certifies that there is an appropriate adjustment in the case mix * * * to compensate for the increased costs associated with [such] residents * * *.'' As discussed elsewhere in this proposed rule, we are not proposing at this time to address the issue of such certification and, accordingly, the temporary add-on payments created by section 511 of the MMA will remain in effect during FY 2006.

The law further provided that the 128 percent increase in payment under the AIDS add-on is to be ''* * * determined without regard to any increase'' under section 101 of the BBRA (as amended by section 314 of the BIPA). As explained in the MMA Conference report, this means that if a resident qualifies for the temporary 128 percent increase in payment under the special AIDS add-on, ''the BBRA temporary RUG add-on does not apply in this case * * *.'' (H.R. Conf. Rep. No. 108–391 at 662). The AIDS add-on was also discussed in Transmittal #160 (Change Request #3291), issued on April 30, 2004, which is available online at *http://www.cms.hhs.gov/manuals/pm_trans/2004/transmittals/comm_date_dsc.asp.*

In addition, section 410 of the MMA contained a provision that affects the consolidated billing requirement, which we discuss in section IV of this proposed rule.

F. Skilled Nursing Facility Prospective Payment—General Overview

The Medicare SNF PPS was implemented for cost reporting periods beginning on or after July 1, 1998. Under the PPS, we pay SNFs through prospective, case-mix adjusted per diem payment rates applicable to all covered SNF services. These payment rates cover all the costs of furnishing covered skilled nursing services (routine, ancillary, and capital-related costs) other than costs associated with approved educational activities. Covered SNF services include post-hospital services for which benefits are provided under Part A and all items and services that, before July 1, 1998, had been paid under Part B (other than physician and certain other services specifically excluded under the BBA) but furnished to Medicare beneficiaries in a SNF during a covered Part A stay. A complete discussion of these provisions appears in the May 12, 1998 interim final rule (63 FR 26252).

1. Payment Provisions—Federal Rate

The PPS uses per diem Federal payment rates based on mean SNF costs in a base year updated for inflation to the first effective period of the PPS. We developed the Federal payment rates using allowable costs from hospital-based and freestanding SNF cost reports for reporting periods beginning in FY 1995. The data used in developing the Federal rates also incorporated an estimate of the amounts that would be payable under Part B for covered SNF services furnished to individuals during the course of a covered Part A stay in a SNF.

In developing the rates for the initial period, we updated costs to the first effective year of PPS (the 15-month period beginning July 1, 1998) using a SNF market basket, and then standardized for the costs of facility differences in case-mix and for geographic variations in wages. Providers that received new provider exemptions from the routine cost limits were excluded from the database used to compute the Federal payment rates, as well as costs related to payments for exceptions to the routine cost limits. In accordance with the formula prescribed in the BBA, we set the Federal rates at a level equal to the weighted mean of freestanding costs plus 50 percent of the difference between the freestanding mean and weighted mean of all SNF costs (hospital-based and freestanding) combined. We computed and applied separately the payment rates for facilities located in urban and rural areas. In addition, we adjusted the portion of the Federal rate attributable to wage-related costs by a wage index.

The Federal rate also incorporates adjustments to account for facility case-mix, using a classification system that accounts for the relative resource utilization of different patient types. This classification system, Resource Utilization Groups, version III (RUG–III), uses beneficiary assessment data from the Minimum Data Set (MDS) completed by SNFs to assign beneficiaries to one of 44 RUG–III groups. The May 12, 1998 interim final rule (63 FR 26252) included a complete and detailed description of the RUG–III classification system, and a further discussion appears in section II.B of this proposed rule.

The Federal rates in this proposed rule reflect an update to the rates that we published for FY 2005 equal to the full change in the SNF market basket index. According to section 1888(e)(4)(E)(ii)(IV) of the Act, for FY 2006, we would update the rate by adjusting the current rates by the full SNF market basket index.

2. Payment Provisions—Initial Transition Period

The SNF PPS included an initial, phased transition from a facility-specific rate (which reflected the individual facility's historical cost experience) to the Federal case-mix adjusted rate. The transition extended through the facility's first three cost reporting periods under the PPS, up to and including the one that began in FY 2001. Accordingly, starting with cost reporting periods beginning in FY 2002, we base payments entirely on the Federal rates and, as indicated in section II.G of this proposed rule, we no longer include adjustment factors related to facility-specific rates for the coming fiscal year.

G. Use of the Skilled Nursing Facility Market Basket Index

Section 1888(e)(5) of the Act requires us to establish a SNF market basket index that reflects changes over time in the prices of an appropriate mix of goods and services included in the covered SNF services. The SNF market basket index is used to update the Federal rates on an annual basis. The final rule published on July 31, 2001 (66 FR 39562) revised and rebased the market basket to reflect 1997 total cost data.

In addition, as explained in the FY 2004 final rule (68 FR 46058, August 4, 2003) and in section III.B of this proposed rule, the annual update of the payment rates includes, as appropriate, an adjustment to account for market basket forecast error. This adjustment takes into account the forecast error from the most recently available fiscal year for which there are final data, and is applied whenever the difference between the forecasted and actual change in the market basket exceeds a 0.25 percentage point threshold. For FY 2004 (the most recently available fiscal year for which there are final data), the estimated increase in the market basket index was 3.0 percentage points, while the actual increase was 3.1 percentage points. Therefore, the payment rates for FY 2006 do not include a forecast error adjustment, as the difference between the estimated and actual amounts of change does not exceed the 0.25 percentage point threshold. Table 1 below shows the forecasted and actual market basket amounts for FY 2004.

TABLE 1.—FY 2004 FORECAST ERROR CORRECTION FOR CMS SNF MARKET BASKET

Index	Forecasted FY 2004 increase *	Actual FY 2004 increase **	FY 2004 forecast error correction ***
SNF	3.0	3.1	0.0

* Published in August 4, 2003 **Federal Register**; based on second quarter 2003 Global Insight/DRI–WEFA forecast.
** Based on the fourth quarter 2004 Global Insight/DRI–WEFA forecast.
*** The FY 2004 forecast error correction will be applied to the FY 2006 PPS update. Any forecast error less than 0.25 percentage points is not reflected in the update.

II. Update of Payment Rates Under the Prospective Payment System for Skilled Nursing Facilities

A. Federal Prospective Payment System

This proposed rule sets forth a schedule of Federal prospective payment rates applicable to Medicare Part A SNF services beginning October 1, 2005. The schedule incorporates per diem Federal rates that provide Part A payment for all costs of services furnished to a beneficiary in a SNF during a Medicare-covered stay.

1. Costs and Services Covered by the Federal Rates

The Federal rates apply to all costs (routine, ancillary, and capital-related costs) of covered SNF services other than costs associated with approved educational activities as defined in § 413.85. Under section 1888(e)(2) of the Act, covered SNF services include post-hospital SNF services for which benefits are provided under Part A (the hospital insurance program), as well as all items and services (other than those services excluded by statute) that, before July 1, 1998, were paid under Part B (the supplementary medical insurance program) but furnished to Medicare beneficiaries in a SNF during a Part A covered stay. (These excluded service categories are discussed in greater detail in section V.B.2 of the May 12, 1998 interim final rule (63 FR 26295 through 63 FR 26297)).

2. Methodology Used for the Calculation of the Federal Rates

The proposed FY 2006 rates would reflect an update using the full amount of the latest market basket index. The FY 2006 market basket increase factor is estimated to be 3.0 percent. Consistent with previous years, this factor may be revised in the final rule when later forecast data are available. For a complete description of the multi-step process, see the May 12, 1998 interim final rule (63 FR 26252). We note that in accordance with section 101(a) of the BBRA and section 314 of the BIPA, the existing, temporary increase in the per diem adjusted payment rates of 20 percent for certain specified clinically complex RUGs (and 6.7 percent for rehabilitation RUGs) remains in effect until the implementation of case-mix refinements. (A discussion of the case-mix refinements that we now propose to implement appears in section II.B of this preamble.)

We used the SNF market basket to adjust each per diem component of the Federal rates forward to reflect cost increases occurring between the midpoint of the Federal fiscal year beginning October 1, 2004, and ending September 30, 2005, and the midpoint of the Federal fiscal year beginning October 1, 2005, and ending September 30, 2006, to which the payment rates apply. In accordance with section 1888(e)(4)(E)(ii)(IV) of the Act, the payment rates for FY 2006 are updated by a factor equal to the full market basket index percentage. The rates would be further adjusted by a wage index budget neutrality factor, described later in this section. The unadjusted rates are the same under both the existing 44 group RUG classification system and the proposed RUG–53 classification system. Tables 2 and 3 reflect the updated components of the unadjusted Federal rates for FY 2006.

TABLE 2.—FY 2006 UNADJUSTED FEDERAL RATE PER DIEM—URBAN

Rate component	Nursing—case-mix	Therapy—case-mix	Therapy—non-case-mix	Non-case-mix
Per Diem Amount	$137.44	$103.53	$13.63	$70.15

TABLE 3.—FY 2006 UNADJUSTED FEDERAL RATE PER DIEM—RURAL

Rate component	Nursing—case-mix	Therapy—case-mix	Therapy—non-case-mix	Non-case-mix
Per Diem Amount	$131.30	$119.38	$14.56	$71.45

B. Case-Mix Adjustment and Other Clinical Issues

[If you choose to comment on issues in this section, please include the caption ''*Case-Mix Adjustment and Other Clinical Issues*'' at the beginning of your comments.]

Under the BBA, we must publish the SNF PPS case-mix classification methodology applicable for the next Federal FY before August 1 of each year. As discussed in the following sections, we propose to begin utilizing a refinement to the RUG–III case-mix classification system applicable to the SNF PPS during FY 2006, and we specifically solicit comments on the proposed refinement.

1. Background

The SNF PPS replaced the cost-based structure that had been in effect since the inception of the Medicare program. Under the SNF PPS, providers have more flexibility in the use of Medicare funds but are responsible not only for furnishing the full range of services to Medicare beneficiaries, but for the cost effectiveness of their purchasing decisions. Like the inpatient hospital PPS, reimbursement for all services, including therapy and other ancillaries such as diagnostic tests, supplies, and pharmacy, were for the first time included in the SNF Part A ''bundle of services'' and reimbursed directly to the SNF rather than to the actual entity furnishing the service.

In addition, in response to over a decade of rapidly rising Medicare SNF payments, the SNF PPS instituted controls to adjust for identified overutilization and inflated charge structures for therapy and other ancillary services. By restructuring the payment system to reflect a more appropriate expenditure level, there was an aggregate decrease in Medicare expenditure levels for the first SNF PPS year. Providers responded to the SNF PPS by restructuring their operations and practice patterns in an effort to adapt to the new payment structure and incentives.

These rapid changes in facility practices and Medicare payment also generated significant concerns that the transition to a prospective payment system would impede access for beneficiaries with complex medical needs and, by decreasing aggregate payments to SNFs, negatively affect the quality of care in nursing homes across the country. The research presented in this proposed rule was initiated as part of a broad-based effort to investigate and respond to access, quality, and payment concerns raised by industry, advocates, and other stakeholders.

During the course of this effort, CMS developed tools to monitor and evaluate quality of care that are now integral components of our program oversight activities, including the use of Quality Indicators, Quality Measures, and Nursing Home Compare. As discussed later in this section, the development of these new capabilities has also positioned us to move forward in new areas. The refinements discussed in this section are based on research originally conducted by Abt Associates (and later validated by the Urban Institute) that was initiated immediately after the introduction of the SNF PPS in 1999.

In the BBRA, the Congress acted to address these access and quality concerns by enacting a series of temporary payment adjustments. At present, only one of these payment adjustments is still in effect, a 20 percent increase in the per diem adjusted payment rates for 12 complex medical RUG–III groups (SE3, SE2, SE1, SSC, SSB, SSA, CC2, CC1, CB2, CB1, CA2, and CA1,) and a 6.7 percent increase to all 14 rehabilitation groups. This legislation specified that the payment adjustments would continue until the later of: (1) October 1, 2000, or (2) implementation of a refined case-mix classification system under section 1888(e)(4)(G)(i) of the Act that would better account for medically complex patients.

As we noted in the SNF PPS proposed rule for FY 2001 (65 FR 19190, April 10, 2000), this mandated rate increase was intended to serve as a temporary, interim adjustment to the payment rates and RUG–III case-mix classification system as published in the final rule of July 30, 1999, until implementation of the case-mix refinements described in the legislation. In that FY 2001 proposed rule, we included a proposal for an extensive, comprehensive set of refinements to the existing case-mix classification system that collectively would have resulted in expanding the existing 44-group structure to well over 150 groups.

The speed with which we conducted this initial evaluation of the SNF PPS demonstrated our commitment to ensuring the accuracy and equity of the new payment system, but the evaluation had important limitations. Comprehensive SNF PPS data were not yet available, and the research was conducted using 1995–1997 data housed in a large, cross-linked research database collected from only six states that had implemented a RUG–III payment system prior to July 1998 (either through the Federal case-mix demonstration project or for state Medicaid payment). These limitations were explained in the proposed rule along with our plans to validate the data using a national SNF PPS database (65 FR 19193, April 10, 2000).

In conducting the validation analyses, it became clear that the introduction of the SNF PPS and SNF consolidated billing had caused changes in facility practice patterns and billing. Some of these changes could also have been related to the use of a national database and to changing industry practices during the early stages of the SNF PPS implementation. While it was still true that beneficiaries requiring both rehabilitation and extensive medical services used greater amounts of ancillary services, the distribution patterns for those high-cost ancillaries (such as medications and respiratory therapy) had changed from the patterns in the six-state data. These results, in conjunction with the high degree of intra-group and inter-group variability in ancillary utilization identified in both the initial and validation analyses, raised new questions that needed to be addressed prior to implementing refinements. For these reasons, we decided not to implement such refinements at that time. (See the FY 2001 final rule, 65 FR 46773, July 31, 2000.)

Several months later, the Congress enacted the BIPA. Of the various provisions of this legislation that addressed the SNF PPS, one directive also addressed the future development of the SNF PPS. Specifically, section 311(e) of the BIPA directed us to conduct a study of the different systems for categorizing patients in Medicare SNFs in a manner that accounts for the

relative resource utilization of different patient types and to issue a report with any appropriate recommendations to the Congress.

Based upon the broad language describing the purpose of this study, and the multi-year timeframe provided for conducting it, we believe that the Congress clearly intended for this study to address comprehensive changes, by evaluating a number of different classification systems and considering the full range of patient types. In contrast, since the BBRA specifically ties the duration of its temporary payment increases to the implementation of a case-mix refinement that would ''better account for medically complex patients,'' we believe that even case-mix refinements of a more incremental nature would meet this more targeted mandate to better account for medically complex patients, and need not await the completion of the broader changes envisioned in the BIPA provision.

Moreover, ongoing analysis of the SNF PPS showed that providers have adjusted to it, and that the SNF PPS rates have generally covered the cost of care to Medicare beneficiaries. For example, in its March 2005 report, MedPAC estimated 2005 profit margins for freestanding SNFs of 13 percent. In this environment, it is appropriate to reevaluate the need for maintaining payment adjustments that were always intended to be temporary.

2. Case-Mix Refinement Research

a. Data Sources and Analyses

In July 2001, we awarded a contract to the Urban Institute (Urban) for performance of research to aid us in making refinements to the case-mix classification system under section 1888(e)(4)(G)(i) of the Act and starting the case-mix study mandated by section 311(e) of the BIPA. The first phase of the contract focused on developing options for refining the case-mix classification system under section 1888(e)(4)(G)(i) of the Act to account for medically complex patients. As part of this research, Urban updated and broadened the database created for the previous refinement analyses by using 1999 matched MDS and SNF claims, and applied the latest cost report data (1998 and 1999) to estimate costs more accurately for non-therapy ancillary and other services.

We then used this updated and broadened database to replicate and validate the earlier studies conducted by Abt. The study used Medicare SNF claims data for calendar year 1999 and MDS data from our National MDS Repository. We matched the claims to the MDS assessments upon which they were based, yielding approximately 2.7 million MDS segments, resulting in *every* national facility that billed Medicare for a Part A SNF stay in 1999 being represented in the database. We allocated the non-therapy ancillary costs to the portion of the stay in which they were most likely to have been incurred according to a set of decision rules. We performed comparative analyses of cost and charge data to other existing administrative data sets in order to establish the validity of these data. We also performed a further regression analysis of costs and RUG–III groups.

In addition, we constructed anew the case-mix indexes using our Staff Time Measurement (STM) study data. The STM data were collected in 1990, 1995, and 1997, and are described in the May 12, 1998 interim final rule (63 FR 26252) that implemented the SNF PPS.

Urban then analyzed 270,215 records, a 10 percent sample of this updated and broadened database. As expected, our analyses again verified that non-therapy ancillary costs are higher for Medicare beneficiaries who classify into the Extensive Services category than for those who classify to other categories. In these analyses, Urban found that the addition of a combined Rehabilitation plus Extensive group improved the predictive power of the model. These results were very similar to the preliminary Abt results discussed in our FY 2001 proposed rule, and provided validation for the preliminary Abt analyses (that is, both studies showed an increase in the R-square (explanation of variance) for non-therapy ancillaries from approximately 4.1 percent in the 44-group model to 8 percent in the 58-group model that added nine Rehabilitation plus Extensive groups).

Urban then replicated its results with 2001 data using the same analytic protocols. In this study, Urban found that the addition of a new RUG–III Rehabilitation plus Extensive category was consistent with the prior research. Urban used a 163,386 record test sample and found that the R-square for non-therapy ancillaries improved to 9.5 percent from the previous result of 4.1 percent mentioned above. The analyses were repeated on a 170,253 record validation sample with a comparable result; that is, an R-square of 10.3 percent.

While maintaining the general structure of the RUG–III system, we found that the most viable way to refine the system at the present time would be to add groups to the top of the hierarchy to capture beneficiaries who qualify for both the Extensive Services category and the Rehabilitation Therapy category. In addition, beneficiaries who qualify for Extensive Services and receive rehabilitation services have assumed a larger percentage of the Medicare patient population in SNFs in recent years. Therefore, we believe that the RUG–III case-mix classification system can provide even more accurate payment for these beneficiaries if refined to create a new RUG–III category for beneficiaries who qualify for both the Extensive Services and Rehabilitation Therapy categories.

b. Constructing the New RUG–III Groups

Our research findings showed little or no correlation between the groups within the Extensive Services category (that is, SE1, SE2, SE3) and the level of rehabilitation services used. For this reason, the structure for this new hierarchy level would closely mirror that of the existing Rehabilitation Therapy groups. Normally, this methodology would result in the creation of 14 new groups, the number that was originally proposed in the FY 2001 proposed rule. However, for the reasons discussed below, the more recent research (Urban 2003) has shown that a smaller number of RUG–III groups are sufficient to address the needs of beneficiaries eligible for a new RUG–III category, Combined Rehabilitation and Extensive Care.

First, we found that several of the groups had very few beneficiaries assigned to them. In fact, no beneficiaries at all were assigned to several of the lowest ADL score rehabilitation groups. Second, under the present structure, each Rehabilitation group is sub-divided into three levels based on the activities of daily living (ADL) score. The lowest level ADL score for the Rehabilitation groups is either 4–7 or 4–8, and very few beneficiaries currently classify into those groups. No beneficiaries who would qualify for the proposed newly created groups would classify into such a low ADL score level, as a minimum ADL score of seven is required for classification into an Extensive Care group.

Therefore, it appears that stratification for the lowest level ADL scores for the proposed new groups would add needless complexity and, thus, would not be warranted. Instead, we propose to combine that level with the next higher level, and would no longer use the ADL scores lower than 7. Thus, the proposed new groups would be stratified only by two levels of ADL score. For example, the Rehabilitation High plus Extensive Services group would be subdivided into only two ADL levels, ADL scores of 7–12 and 13–18. This left us with only

one level for Rehabilitation Low plus Extensive Services and with only two levels at each of the other sub-categories in the new category, for a total of 9 new groups. As a result, we are proposing the addition of 9 new RUG–III groups.

TABLE 3a.—CROSSWALK BETWEEN EXISTING RUG–III REHABILITATION GROUPS AND THE PROPOSED EXTENSIVE PLUS REHABILITATION GROUPS

	Current rehabilitation groups	New combined extensive plus rehabilitation groups
Rehab Ultra	• RUC–ADL 16–18. • RUB–ADL 9–15 • RUA–ADL 4–8	• RUX–ADL 16–18. • RUL–ADL 7–15.
Rehab Very High	• RVC–ADL 16–18. • RVB–ADL 9–15. • RVA–ADL 4–8	• RVX–ADL 16–18. • RVL–ADL 7–15.
Rehab High	• RHC–ADL 13–18. • RHB–ADL 8–12 • RHA–ADL 4–7	• RUX–ADL 13–18. • RUL–ADL 7–12.
Rehab Medium	• RHC–ADL 15–18 • RHB–ADL 8–14. • RHA–ADL 4–7	• RUX–ADL 15–18. • RUL–ADL 7–14.
Rehab Low	• RLB–ADL 14–18 • RLA–ADL 4–13	• RUX–ADL 7–18

c. Development of the Case-Mix Indexes

We developed the case-mix indexes for the proposed refined RUG–III system using the same method used for calculating the initial SNF PPS case-mix indexes. The original staff time studies conducted in 1990, 1995, and 1997 resulted in the assignment of resident-specific and non-resident specific time (minutes) to individual SNF residents. In the initial determination of the case-mix indexes, the residents were classified into the 44-group system and the minutes of staff time, nursing, and therapy services, where appropriate, remained associated with those residents. All of the staff time was stratified by type of staff providing the minutes of time (for example, RN, LPN, etc.), and the minutes were weighted for salary.

In order to calculate weights for the proposed refined system, we used the minutes as originally assigned at the individual patient level. We reclassified the patients into the proposed 53 groups with their associated wage-weighted minutes of resident-specific and nonresident-specific staff time. The next step was to apply these wage-weighted minutes to the entire sample population of 26 million days. We multiplied the population in each group by the wage-weighted minutes for each of the staff types. We then derived an average for the group using the sum of the wage-weighted minutes for all staff (nursing and therapy staff minutes were calculated separately) xxdivided by the total population for that group. The relative weight was then calculated by dividing that average by the average minutes across all of the RUG–III groups.

The nursing weights changed more than the therapy weights, due to the redistribution of patients from existing groups to the newly created proposed groups. Even though many of the beneficiaries who move into one of the proposed new groups are from an existing therapy group, the therapy weights are affected only slightly. This is because the amount of therapy time does not change significantly between the existing groups and the proposed new groups. The therapy groups were already narrowly stratified by minutes of therapy provided. The groups' weights would be affected only to the extent that the individual beneficiaries who are reclassified into one of the proposed new groups have unusually high or low minutes of therapy within the specific limits. The nursing weights are more affected by the reclassifications, as those are based on a much broader scope of possible minute values.

The therapy weights for the nine proposed Rehabilitation Therapy plus Extensive Services groups were identical to those for the comparable existing RUG–III rehabilitation therapy groups. Although we are capturing increased medical/clinical complexity with the proposed new groups, the therapy contribution remains the same as for the existing therapy groups. In this way, the Rehabilitation High therapy weight is identical to the new Rehabilitation High plus Extensive Services sub-category.

The effect of the increased number of groups and changes in the case-mix indexes should be distributional. By this we mean that the relative weights assigned to each RUG–III group would shift so that the proposed new Rehabilitation plus Extensive groups would have the highest relative weights and the weights for other RUG–III groups would decrease proportionally.

The results of applying these methods to index calculation worked well and yielded hierarchically sound indexes for all of the groups; that is, the indexes for the highest groups in the hierarchy are higher than for those below it, and this pattern holds throughout the proposed new category.

The nursing indexes in the new category, as well as in the existing rehabilitation category, are naturally more compressed (that is, encompass a smaller range) than those in the 44-group RUG–III rehabilitation groups. The groups within the new Rehabilitation plus Extensive category are more homogeneous than were the rehabilitation groups of the 44-group system. By removing the most clinically complex cases and better accounting for them by putting them in rehabilitation groups of their own, both the resulting proposed new category and the remaining rehabilitation category groups would be more homogeneous and, therefore, the relative weights for each set of groups would exhibit less variance.

Next, we simulated payments using the existing weights compared to the new weights to ensure that the refinement did not result in greater or lesser aggregate payments. The simulation results showed an almost exact match in payments under both case-mix models. However, the proposed new 53-group model did yield a slight decrease (less than 1 percent) in aggregate Medicare payments. To

remove this minor variance, we then applied a factor of +.02 to calibrate the nursing indexes and re-ran the simulation. Using this calibration factor of +.02, we are able to ensure absolute parity of aggregate payment under the 53-group RUG–III system compared to the 44-group system.

Finally, we propose to provide for an additional adjustment to the nursing component of the case-mix weights (which includes non-therapy ancillary services) for all RUG–53 groups. As discussed further in section II.B.3 of this proposed rule, we have reviewed data that show a high degree of variability in non-therapy ancillary utilization, not only within but across RUG groups. Therefore, we believe that it is appropriate to adjust the case-mix weights for all 53 groups (that is, the existing 44 RUG–III groups plus the 9 new groups that we are proposing to create in this proposed rule) to better account for non-therapy ancillary variability. We would do this under our authority in section 1888(e)(4)(G)(i) of the Act to establish an ''appropriate adjustment to account for case mix * * * *''

In determining the size of this adjustment, we considered not only the high degree of variability in non-therapy ancillary costs, but also the absence of an outlier policy under the SNF PPS. Accordingly, we looked at the outlier pool established under another post-acute care PPS, the one for inpatient rehabilitation facility (IRF) services, which is set at 3 percent of aggregate expenditures. For the purpose of this refinement, our calculations employed a comparable funding level that could be targeted toward payment of non-therapy ancillaries. Based on this analysis, we are proposing an increase to the nursing component of the case-mix weights (the component that includes non-therapy ancillaries) of approximately 8.4 percent, which equates to approximately 3 percent of aggregate expenditures under the SNF PPS. The final RUG–53 nursing indexes are presented in Tables 4a and 5a. Further information regarding this adjustment can be found in section II.B.3 of this proposed rule.

3. Proposed Refinements to the Case-Mix Classification System

[If you choose to comment on issues in this section, please include the caption ''*Proposed Refinements to the Case-Mix Classification System*'' at the beginning of your comments.]

We note that, of the various individual refinements that were collectively set forth in the FY 2001 proposed rule (65 FR 19194), the particular refinement that entailed the least amount of added complexity (yet addressed the medically complex patient) involved the creation of several additional groups that would comprise a new, combined Rehabilitation plus Extensive Services category. As we noted in that proposed rule:

There are * * * a significant number of beneficiaries who would classify into the Extensive Services category based on clinical conditions but who, because they are also receiving rehabilitation services, classify into one of the Rehabilitation groups instead (due to the hierarchical logic of the RUG–III classification system). These beneficiaries carry with them the same non-therapy ancillary costs associated with their complex clinical needs even though they are classified into a RUG–III Rehabilitation category. The high costs for beneficiaries in the Extensive Services category suggest that the payment rate for Extensive Services should be increased. However, increasing the payment rate without further adjustments could adversely affect provider incentives to provide therapy to beneficiaries requiring Extensive Services. Therefore, we expanded the scope of the proposed refinement to include new categories for beneficiaries who qualify for both Extensive Services and a RUG–III Rehabilitation category.

Further, as our subsequent research (discussed in the previous section) confirmed, the creation of a proposed new Rehabilitation plus Extensive category would be a means of accounting more accurately for the costs of certain medically complex patients, with the added benefit of a minimal degree of added complexity. We note that, in the past, some support has been expressed for making this particular type of modification to the existing case-mix classification system.

Therefore, we propose to refine the case-mix classification system under section 1888(e)(4)(G)(i) of the Act by creating a new, combined Rehabilitation plus Extensive category, that better accounts for medically complex patients, as required in section 101 of the BBRA. Accordingly, the payment rates set forth in this proposed rule reflect the use of the refined 53-group RUG classification system that we are proposing. The nine groups that we propose to add to the existing RUG–III system are as follows:

RUX Rehabilitation Ultra High plus Extensive Services, High
RUL Rehabilitation Ultra High plus Extensive Services, Low
RVX Rehabilitation Very High plus Extensive Services, High
RVL Rehabilitation Very High plus Extensive Services, Low
RHX Rehabilitation High plus Extensive Services, High
RHL Rehabilitation High plus Extensive Services, Low
RMX Rehabilitation Medium plus Extensive Services, High
RML Rehabilitation Medium plus Extensive Services, Low
RLX Rehabilitation Low plus Extensive Services

We note that, like our current proposal, the case-mix refinement that we considered in our FY 2001 proposed rule would have reconfigured the RUGs themselves, in a general effort to allocate payments more accurately under the SNF PPS. However, that earlier proposal also included an additional element, which was intended to help ensure more accurate allocation of payments specifically with regard to non-therapy ancillaries (such as drugs and medications, laboratory services, supplies and other equipment). For example, it proposed moving the non-therapy ancillary costs used in establishing the nursing case-mix component of the payment rates to a separate, newly created ''medical ancillary'' component (65 FR 19192, April 10, 2000). In addition, it suggested a number of possible models, both weighted and unweighted, for a new non-therapy ancillary index (65 FR 19248ff). As noted in the FY 2001 final rule, these elements ultimately were not adopted when subsequent research indicated that their added complexity would outweigh their increased predictive power (65 FR 46774, July 31, 2000).

Following the publication of that final rule, further research in this area revealed a high degree of variability in non-therapy ancillary utilization, both within and across the various RUG–III groups. This finding suggested that using an index model to address non-therapy ancillary services might require the creation of such a high number of groups as to be impractical.

In fact, the ability of the SNF PPS to account adequately for non-therapy ancillary services has been the subject of attention (and a focus of our research) since the very inception of the system. When the Congress originally enacted the SNF PPS in the BBA, it expressed concern in the accompanying legislative history ''* * * that under a prospective payment system that includes all services there may be incentives to decrease the use of ancillary services' (H. Rep. No. 105–149 at 1318). Subsequent legislative initiatives, such as the BBRA mandate to develop case-mix refinements that better account for

''medically complex'' patients, and the directive in section 311(d) of the BIPA for the GAO to conduct a study of the adequacy of Medicare's SNF payment rates, can all be viewed in the context of an ongoing Congressional concern in this area.

For those reasons, and because the data that we have show wide variability in non-therapy ancillary utilization within each RUG, we believe the refinement that we now propose should include not only a reconfiguration of the RUGs that addresses the accuracy of payment allocation in general terms, but also an additional element that improves the accuracy of payment allocation and accounts more directly for cost variations related to non-therapy ancillary services. Accordingly, as part of our proposed refinement, we propose to increase the case-mix indexes of the existing 44 RUG–III groups (as well as those of the nine proposed new Rehabilitation plus Extensive Services RUGs), by calculating a percentage increase that would increase aggregate payments.

As noted previously, we have reviewed data that show great variability in the ancillary services (such as pharmacy) utilized by different SNF residents who are classified into the same RUG–III group. For example, two different patients, both classified into the SE3 group, might utilize markedly different amounts of ancillary services for reasons that are not captured within the current RUG–III classification methodology. Our data show that the same is true across all of the existing 44 RUG–III groups. The addition of the 9 new groups does not, in itself, compensate for this discrepancy. Although the SNF payment system is designed as a prospective payment system, under which SNFs that treat patients grouped into the same clinical condition should receive the same base payment, the variability in ancillary usage that our data show makes it difficult to account fully for non-therapy ancillary costs by adjusting the number of groups. Therefore, we believe that it is appropriate, considering the data that we have available to us, to provide for an adjustment to each RUG case-mix weight to account for the variability in non-therapy ancillaries, using the authority that we have under section 1888(e)(4)(G)(i) of the Act.

Additionally, we have found a high degree of variability in non-therapy ancillaries not only within but across RUG groups. We have reviewed data showing that an individual patient who is classified into a less intensive RUG may nonetheless be significantly more expensive to treat in terms of non-therapy ancillaries than an individual patient in a more intensive RUG. The data that we have do not adequately explain these discrepancies, and the addition of the 9 new RUGs does not eliminate them. Our data show that the same is true across all 44 RUG–III groups. We note that in creating the SNF PPS, the Congress enacted the only PPS legislation in the Medicare program that does not establish an outlier policy to capture high variability in resource utilization. Therefore, in view of the data that we have available to us that demonstrates wide disparities in non-therapy ancillary resources consumed by patients both within and across RUG–III groups, we believe that it is appropriate to adjust the case-mix weights for all 53 groups (that is, the existing 44 RUG–III groups plus the 9 new groups that we are proposing to create in this proposed rule) to better account for non-therapy ancillary variability. We would do this by exercising our authority under section 1888(e)(4)(G)(i) of the Act to establish an ''appropriate adjustment to account for case mix,'' in order to maintain access and quality of care for heavy-care patients.

In determining the size of this adjustment, we considered the high degree of variability in non-therapy ancillary costs (which was not yet known at the time that the BBA and the BBRA were enacted), and the absence of an outlier policy under the SNF PPS. Accordingly, we looked at the outlier pool established under another PPS for post-acute care, the inpatient rehabilitation facility prospective payment system (IRF PPS), which is set at 3 percent of aggregate expenditures. For the purpose of this refinement, we calculated the SNF dollars needed to achieve a comparable funding level that could be targeted towards payment of non-therapy ancillaries. Based on this analysis, we are proposing an increase to the nursing component of the case-mix weights (the component that includes non-therapy ancillaries) of approximately 8.4 percent, which equates to approximately 3 percent of aggregate expenditures under the SNF PPS.

Moreover, we believe that this type of adjustment can essentially serve as a proxy for the non-therapy ancillary index that we proposed previously as a means of achieving more appropriate payment for these services, without the potential drawbacks of our earlier proposal in terms of complexity and addressing variability in utilization. In fact, while we are confident that the decision to maintain a relatively small number of RUG groups is correct in terms of the overall operation of the SNF PPS, it is still true that this number of groups made it extremely difficult to distinguish different levels of non-therapy ancillary use. The problem may be less severe in other PPSs that use a greater number of groups. For example, the IRF PPS was initially structured to have 100 groups, and the inpatient hospital PPS (IPPS) has over 500 diagnosis-related groups. Similarly, there are over 7,000 relative value units under the resource-based relative value scale that determines the payment rates for physician and other Part B services. By contrast, under this proposed rule, there will be only 53 RUGs. By definition, then, there will be wider variation in the resource needs of patients classified into a particular RUG. We, therefore, believe that it is appropriate to provide for a further adjustment to the case-mix index to compensate for these broad discrepancies.

We note that we are advancing these proposed changes under our authority in section 101(a) of the BBRA to establish case-mix refinements, and that the changes we are hereby proposing will represent the final adjustments made under this authority. Accordingly, any future changes to the case-mix weights or other components of the SNF PPS would be accomplished through staff time measures and other validated analytical studies.

As further explained in section II.B.4 of this proposed rule, these additional payments would partially offset the expiration of the temporary add-on payments that will occur, under the terms of section 101(c) of the BBRA, upon the implementation of this proposed case-mix refinement. We believe that implementing the proposed case-mix refinement in this manner will carry out Congressional intent that the BBRA's temporary payment add-ons should not continue indefinitely into the future, while at the same time ensuring that payments under the SNF PPS continue to support the quality of care furnished in this setting.

Further, the creation of the proposed new Rehabilitation plus Extensive Services groups underscores the importance of ensuring the accuracy of patient classifications, particularly with regard to those categories, such as Extensive Services, that encompass medically complex patients. One way to accomplish this could be by ensuring that the MDS data used in making such classifications reflect only those services that are actually furnished during the SNF stay itself rather than during the preadmission period (for example,

during the prior qualifying hospital stay). In the July 30, 1999 SNF PPS final rule (64 FR 41668 through 41669), we noted a public comment that questioned the appropriateness of the MDS's 14-day ''look-back'' provision in the specific context of the SNF level of care presumption. While we made no revisions to the look-back provision at that time, we specifically reserved the right to reconsider the continued use of this mechanism in the future.

Subsequent analysis in this area has focused on the four items contained in the Special Service section of the MDS (P1a—IV medications, suctioning, tracheostomy care, and use of a ventilator/respirator) that serve to classify residents into Extensive Care, the category used for the most medically complex SNF patients under the RUG–III classification system. This analysis indicates that the use of the look-back provision has caused a significant number of residents to classify to the Extensive Services category based solely on services (such as intravenous medications) that were furnished exclusively during the period before SNF admission. Depending on how such a proposal was formulated, it has the potential to reduce overall SNF payments by better aligning them with the services actually provided. Therefore, we seek comment on the potential savings and other impacts of revising the MDS Manual instructions to include only those special care treatments and programs (MDS Section P1a) furnished to the resident since admission or re-admission to the SNF, similar to the requirement for P1b. We anticipate that this change can be accomplished through an update to the MDS Manual instructions, and will not involve system changes at the facility, State agency, or Federal level.

In addition, we are inviting comments on other policy options that could enhance the accuracy of the payment system and improve the quality of care provided to Medicare beneficiaries during an SNF stay, without limiting access to post-acute care. For example, we have received recommendations to decrease or eliminate the grace day period specifically for the 5-day PPS MDS assessment. We invite comments on this specific recommendation as well as decreasing or eliminating the grace periods associated with all PPS MDS assessments. Another example of a possible policy change on which we invite comment would be whether it might be appropriate to eliminate the projection of anticipated therapy services during the 5-day PPS assessment. We invite comments on these and other existing SNF policies that may have an impact on the quality of care in this setting.

In accordance with section 101 of the BBRA, implementing these proposed refinements to the case-mix system means that the payment rates set forth in this proposed rule would no longer reflect the temporary add-ons to the Federal rates for specified RUG–III groups. We understand that the expiration of the temporary payment increases, provided for in that legislation, results in a significant reduction in Medicare's payments between FY 2005 and FY 2006. In fact, MedPAC has consistently urged that, until CMS can design a new payment methodology, some or all of the temporary add-on payments be retained and allocated towards beneficiaries with complex medical needs.

While this proposed rule sets forth refinements to the existing case-mix classification system and RUG–III categories, we are soliciting comments on the economic impact of the resulting payment changes, as well as their potential impact on beneficiaries' access to quality SNF care. We also invite comments on possible ways in which the case-mix classification system itself might be further modified to help mitigate the effect of the payment changes.

We note that the expiration of the BBRA add-on payments would not necessarily affect the temporary 128 percent increase in the per diem adjusted payment rates for SNF residents with AIDS. In enacting that temporary increase, the Congress cited past research indicating that ''* * * AIDS patients have much higher costs than other patients in the same resource utilization groups in skilled nursing facilities'' (H. Rep. No. 108–178, Part 2, at 221). This underscored the Congress' view that AIDS patients are unique among SNF residents in that they incur significantly higher care costs than residents with other diagnoses, including those who classify to the same RUG–III group. We believe that even if a case-mix refinement can meet the BBRA criterion of better accounting for the needs of medically complex patients generally, this still might not enable the Secretary to certify under section 1888(e)(12)(B) of the Act ''* * * that there is an appropriate adjustment in the case mix * * * to compensate for the increased costs'' specifically associated with this particular group of patients. Thus, while the implementation of case-mix refinements will trigger the expiration of the 20 percent and 6.7 percent add-on payments under section 101(a) of the BBRA (as amended by section 314 of the BIPA), this may not necessarily be the case for the AIDS add-on payments under section 511 of the MMA. Accordingly, pending further examination of this issue, we believe that it would be premature at this time for the Secretary to make the required certification under section 1888(e)(12)(B) of the Act with respect to the unique conditions that pertain to the care of SNF residents with AIDS. As a result, the 128 percent add-on payments for SNF residents with AIDS will remain in effect during FY 2006.

The case-mix adjusted payment rates are listed separately for urban and rural SNFs for the existing 44 group RUG and proposed RUG–53 classification systems in Tables 4, 4a, 5, and 5a, with the corresponding case-mix index values.

We also remain committed to our long-term efforts to monitor the RUG-III case-mix classification system and to an ongoing effort to increase the accuracy and efficiency of the SNF PPS. A series of analyses, including the studies used to develop the refinements discussed above, will be discussed in a forthcoming report to the Congress. In this report, we will discuss the findings and put forth a series of next steps that will provide a framework for future progress. In addition, we have posted data describing the research conducted by ABT and the Urban Institute on our SNF PPS Web site at *http://www.cms.hhs.gov/providers/SNF* PPS. Commenters may wish to consult this material to facilitate a more in depth understanding of the proposals contained in this document.

Moreover, we would like to take this opportunity to discuss our thinking related to broader initiatives in this area related to quality of care. Through the Nursing Home Quality Initiative, the Long Term Care Task Force and other forums for collaborative action, CMS has worked with the SNF industry on the development of valid quality measures, and a variety of quality improvement efforts focused on nursing homes. These efforts and others have resulted in improvements in the quality of care, particularly in facilities that adopt a culture that promotes quality through continuous quality initiatives (CQI), culture change, and other similar programs. Pay for performance is a tool that could provide additional support to improve the quality of care provided in nursing homes. In this way, we could recognize and support the ongoing efforts of nursing homes to improve quality.

Designing Pay for Performance programs for the SNF setting presents some significant issues. While Medicare beneficiaries are the primary users of

SNF services, only a small percentage of these beneficiaries (that is, approximately 10 percent) receive services that are reimbursed under Medicare Part A. The majority of beneficiaries receive services that are reimbursed by multiple payers, including Medicare Part B, Medicaid, and private insurance, and that are delivered within different parts of a nursing facility. Therefore, it is not enough to change practice patterns in just a part of a nursing home (that is, skilled units), as Medicare beneficiaries can be placed anywhere in the facility. In addition, the focus of the nursing, rehabilitative, and medical interventions will typically vary for persons who are receiving short-term skilled nursing facility services versus those persons who are long-term residents in nursing facilities.

For these reasons, quality measures must be carefully constructed; that is, broad-based and designed to effect change across the mix of patients residing in the facility. Similarly, we need to consider how to design effective incentives; that is, superior performance measured against pre-established benchmarks and/or performance improvements.

In addition, while our efforts to develop the various post-acute care PPSs (including the SNF PPS) have generated substantial improvements over the preexisting cost-based systems, each of these individual systems was developed independently. As a result, we have focused on phases of a patient's illness as defined by a specific site of service, rather than on the entirety of the post-acute episode from the standpoint of the patient rather than the facility. As the various provider types (such as SNFs and inpatient rehabilitation facilities (IRFs)) provide similar types of services in some cases, and as the opportunities to provide similar services in different settings increase, we need to investigate a more coordinated approach to payment and delivery of post-acute services that focuses on the overall post-acute episode.

This could entail a strategy of developing payment policy that is as neutral as possible regarding provider and patient decisions about the use of particular post-acute services. That is, Medicare should provide payments sufficient to ensure that beneficiaries receive high quality care in the most appropriate setting, so that admissions and any transfers between settings occur only when consistent with good care, rather than to generate additional revenues. In order to accomplish this objective, we need to collect and compare clinical data across different sites of service.

In fact, in the long run, our ability to compare clinical data across care settings is one of the benefits that will be realized as a basic component of our interest in the use of standardized electronic health records (EHRs) and other steps to promote continuity of care across all settings, including nursing homes. It is also important to recognize the complexity of the effort, not only in developing an integrated assessment tool that is designed using health information standards, but in examining the various provider-centric prospective payment methodologies and considering patient-centric payment approaches that are based on patient characteristics and outcomes. MedPAC has recently taken a preliminary look at the challenges in improving the coordination of our post-acute care payment methods, and suggested that it may be appropriate to explore additional options for reimbursing post-acute services. We agree that CMS, in conjunction with MedPAC and other stakeholders, should consider a full range of options in analyzing our post-acute care payment methods, including the SNF PPS.

We also want to encourage incremental changes that will help us build toward these longer-term objectives. For example, several automated medical record tools are now available that could allow hospitals and SNFs to coordinate discharge planning procedures more closely. These tools can be used to ensure communication of a standardized data set that can also be used to establish a comprehensive SNF care plan. Improved communications may reduce the incidence of potentially avoidable re-hospitalizations and other negative effects on quality of care that occur when patients are transferred to SNFs without a full understanding of their care needs. CMS is looking at ways that Medicare providers can use these tools to generate timely data to support continuity across settings. We are also interested in comments on payment reforms that could promote and reward such continuity, and avoid the medical complications and additional costs associated with re-hospitalization.

Some of the ideas discussed here may exceed CMS's current statutory authority. However, we believe that it is useful to encourage discussion of a broad range of ideas for debate of the relative advantages and disadvantages of the various policies affecting this important component of the health care sector, to ensure that our administrative actions provide maximum support for further steps toward higher quality post-acute care. We welcome comments on these and other approaches.

4. Implementation Issues

[If you choose to comment on issues in this section, please include the caption ''*Implementation Issues*'' at the beginning of your comments.]

As noted previously in this proposed rule, the temporary add-on payments enacted by section 101(a) of the BBRA expire upon the implementation of case-mix refinements. Section 101(c) of the BBRA specifies that the actual date on which these temporary add-on payments are to expire is ''the later of—(1) October 1, 2000; or (2) the date on which the Secretary implements a refined case mix classification system under section 1888(e)(4)(G)(i) of the Social Security Act (42 U.S.C. 1395yy(e)(4)(G)(i)) to better account for medically complex patients''. Section 1888(e)(4)(G)(i) of the Act, in turn, specifies that the Secretary shall provide for an ''appropriate adjustment'' to account for case mix.

While this proposed rule sets forth proposed updates to the SNF PPS payment rates that are to take effect as of October 1, 2005, we recognize that adopting the proposed refinements to the case-mix classification system will likely entail significant changes for SNFs as well as for Medicare contractors. Therefore, in order to allow sufficient time for preparation and to ease the transition to the proposed refinements, we believe that it would be appropriate under section 1888(e)(4)(G)(i) of the Act to make a case-mix adjustment that reflects the implementation of the refinements described below.

Accordingly, from October 1, 2005, through December 31, 2005, we propose to make payment based entirely on the existing 44-group RUG–III classification system. Beginning on January 1, 2006, we propose to make payment based entirely on the proposed new RUG–53 classification system. This means that under the terms of section 101(c) of the BBRA, the temporary add-on payments for certain designated RUG–III groups will expire as of January 1, 2006. We note that the resulting reduction in payment will be partially offset by the increase in the RUG case-mix indexes, as explained previously in section II.B.3 of this proposed rule. We invite comments on all aspects of implementing the proposed case-mix refinements, including our plan to defer implementation until January 1, 2006.

Further, along with those matters relating specifically to the case-mix classification system, we have identified a number of broader clinical issues that

we are also taking this opportunity to address:

5. Assessment Timeframes

We would like to take this opportunity to clarify existing requirements regarding completion of Other Medicare Required Assessments (OMRAs) for beneficiaries reimbursed under the SNF PPS. An OMRA is due 8 to 10 days after the cessation of all therapy (occupational and physical therapies and speech-language pathology services) in all situations where the beneficiary was assigned a rehabilitation RUG–III group on the previous assessment.

The ''last day of therapy'' is the last day on which a therapy service was furnished. It is not the day the discharge order for therapy was received and/or written on the resident's medical record. Therefore, when the last day that therapy was provided falls on a Friday, the Saturday and Sunday directly following are counted as days 1 and 2, respectively, toward the total 8 to 10 days of the OMRA window. The same principles apply when the ''midnight rule'' is initiated during a beneficiary's Part A SNF stay.

In addition, in the relatively uncommon situations where a resident starts a leave of absence after the therapy services have been discontinued and is out of the facility for part of the 8 to 10 day period during which the OMRA must be completed, those therapeutic leave days are to be counted when determining the OMRA due date. While this information is not new, we determined that it would be beneficial to clarify and remind the public of these specific issues involving the OMRA.

6. SNF Certifications and Recertifications Performed by Nurse Practitioners and Clinical Nurse Specialists

[If you choose to comment on issues in this section, please include the caption ''*SNF Certifications and Recertifications Performed by Nurse Practitioners and Clinical Nurse Specialists*'' at the beginning of your comments.]

We are taking this opportunity to clarify the requirement for physician signature on the certification and recertification of the need for SNF care (§ 424.20(e)(2)) as it relates to nurse practitioners (NPs) and clinical nurse specialists (CNSs). In section 6028 of the Omnibus Budget Reconciliation Act of 1989, the Congress amended section 1814(a)(2) of the Act. As amended, the Act specifies that an NP or CNS ''* * * who does not have a direct or indirect employment relationship'' with the facility but is working in collaboration with a physician may sign the required certification (or recertification) for a beneficiary's SNF stay. (Section 1819(b)(6)(A) of the Act further specifies that the medical care of each SNF resident must be under the supervision of a physician (see also the regulations at 42 CFR 483.40(a)(1)).) This provision that bars NPs and CNSs from having a direct or indirect employment relationship with a SNF in order to sign a certification or recertification of the need for care is very restrictive. By contrast, a similar statutory limitation (see section 1919(b)(6)(A) of the Act) on the delegation of physician tasks in Medicaid nursing facilities only bars NPs, CNSs, and physician assistants (PAs) from performing delegated tasks if they are actually employed by the facility.

Following the enactment of this legislation, we received numerous inquiries asking us to define ''direct'' and ''indirect'' employment relationships in greater detail. In the July 26, 1995 final rule (60 FR 38268), we stated that factors indicating whether a NP or CNS has a direct or indirect employment relationship include, but are not limited to the following:

- The facility or someone on its medical staff has the authority to hire or fire the nurse;
- The facility or someone on its medical staff furnishes the equipment or place to work, sets the hours, and pays the nurse by the hour, week, or month;
- The facility or someone on its medical staff restricts the nurse's ability to work for someone else or provides training and requires the nurse to follow instructions.

We note that the longstanding common law test, as set forth in regulations at 20 CFR 404.1005, 404.1007, and 404.1009, continues to determine the presence of a direct employment relationship for the purposes of this provision. However, numerous inquiries from providers and other stakeholders continue to request that we specifically clarify the definition of an ''indirect'' employment relationship in those situations where no direct employment relationship exists. Accordingly, we propose to revise the regulations at § 424.20(e)(2) to identify the existence of an *indirect* employment relationship in terms of the type of services that the practitioner performs in the SNF. We note that NPs and CNSs who are employed by SNFs not only perform the types of delegated physician tasks that are permitted under the long-term care facility requirements for participation at 42 CFR 483.40(e), but typically perform general nursing services as well. We believe that, even in the absence of a direct employment relationship, an SNF that has an NP or CNS perform these general nursing services is essentially utilizing the NP or CNS in the same manner as it would an employee, so that an indirect employment relationship can be considered to exist. Accordingly, in situations where there is no direct employment relationship between the SNF and the NP or CNS, we propose that an indirect employment relationship exists whenever the NP or CNS not only performs delegated physician tasks, but also provides nursing services under the regulations at 42 CFR 409.21, which include such services within the scope of coverage under the Part A SNF benefit. We believe that this criterion is appropriate, because there would be a potential conflict of interest if an NP or CNS who is engaged in furnishing covered Part A nursing services to an SNF's resident were also permitted to certify as to that resident's need for Part A SNF care. We invite comments on the effects of establishing our proposed distinction in this context.

7. Concurrent Therapy

[If you choose to comment on issues in this section, please include the caption ''*Concurrent Therapy*'' at the beginning of your comments.]

The SNF PPS proposed rule for FY 2002 (66 FR 23991, May 10, 2001) included a discussion of concurrent therapy, a practice also known as ''dovetailing.'' In that discussion, we noted that this practice involves a single professional therapist treating more than one Medicare beneficiary at a time—in some cases, many more than one individual at a time. In contrast to group therapy, in which all participants are working on some common skill development, each beneficiary who receives concurrent therapy likely is not receiving services that relate to those needed by any of the other participants. Although the care that each beneficiary receives may be prescribed in his or her individual plan of treatment, it may not conform to Medicare coverage guidelines; that is, the therapy is not being provided individually, and it is unlikely that the services being delivered are at the complex skill level required for coverage by Medicare. We expressed particular concern over instances in which facility management might inappropriately attempt to increase productivity by coercing a therapist, against his or her own professional judgment, to perform concurrent therapy.

In the SNF PPS final rule for FY 2002 (66 FR 39567, July 31, 2001), we noted that most of the public comments that we received on this discussion urged us to continue to recognize concurrent therapy as skilled therapy, and contended that therapists are treating more than one beneficiary concurrently only when appropriate. However, others indicated that our concerns regarding concurrent therapy were, in fact, warranted. They reported that since the implementation of the SNF PPS, professional therapists are encountering increased pressure to be more productive than they have in the past, including the need to see more than one patient at a time, and performing documentation and collaboration with other members of the care team as non-reimbursed time. In response to the comments, we acknowledged that concurrent therapy can have a legitimate place in the spectrum of care options available to therapists treating Medicare beneficiaries, as long as its use is driven by valid clinical considerations. However, while we declined to make any specific policy changes at that time, we reiterated that it is inappropriate for a facility to require, as a condition of employment, that a therapist agree to treat more than one beneficiary at a time in situations where providing treatment in such a manner would compromise the therapist's professional judgment. We also noted that we might revisit this issue in the future should the need to do so arise.

Since that time, we have continued to encounter reports of facilities that attempt to override the therapist's professional judgment and have concurrent therapy performed in the absence of valid clinical considerations. Accordingly, we believe it is appropriate at this time to consider once again whether there is a need to issue additional guidelines to preclude the inappropriate provision of concurrent therapy. We invite comment on the most effective way to prevent the abuse of this practice, and to ensure that concurrent therapy is performed only in those instances where it is clinically justified.

We propose to establish an effective date of January 1, 2006, as the beginning date for the use of the proposed case-mix refinements. Accordingly, from October 1, 2005, through December 31, 2005, we propose to make payment based entirely on the existing 44-group RUG–III classification system. Tables 4, 5, 6, and 7 reflect the corresponding rate information for the existing 44 group RUG–III classification system to be used during this time.

Beginning on January 1, 2006, we propose to make payment based on the proposed new RUG–53 classification system (and, thus, would not include the add-on payments). Tables 4a, 5a, 6a, and 7a reflect the corresponding rate information for the proposed RUG–53 classification system.

Tables 4 and 5 reflect the updated SNF Federal rates for FY 2006 for the existing 44 group RUG–III classification system. Tables 4a and 5a reflect the updated SNF Federal rates for FY 2006 for the RUG–53 classification system. The first nine groups listed in the tables are for new Rehabilitation plus Extensive Services groups.

TABLE 4.—RUG–44, CASE-MIX ADJUSTED FEDERAL RATES AND ASSOCIATED INDEXES—URBAN

RUG III category	Nursing index	Therapy index	Nursing component	Therapy component	Non-case mix therapy component	Non-case mix component	Total rate
RUC	1.30	2.25	178.67	232.94		70.15	481.76
RUB	0.95	2.25	130.57	232.94		70.15	433.66
RUA	0.78	2.25	107.20	232.94		70.15	410.29
RVC	1.13	1.41	155.31	145.98		70.15	371.44
RVB	1.04	1.41	142.94	145.98		70.15	359.07
RVA	0.81	1.41	111.33	145.98		70.15	327.46
RHC	1.26	0.94	173.17	97.32		70.15	340.64
RHB	1.06	0.94	145.69	97.32		70.15	313.16
RHA	0.87	0.94	119.57	97.32		70.15	287.04
RMC	1.35	0.77	185.54	79.72		70.15	335.41
RMB	1.09	0.77	149.81	79.72		70.15	299.68
RMA	0.96	0.77	131.94	79.72		70.15	281.81
RLB	1.11	0.43	152.56	44.52		70.15	267.23
RLA	0.80	0.43	109.95	44.52		70.15	224.62
SE3	1.70		233.65		13.63	70.15	317.43
SE2	1.39		191.04		13.63	70.15	274.82
SE1	1.17		160.80		13.63	70.15	244.58
SSC	1.13		155.31		13.63	70.15	239.09
SSB	1.05		144.31		13.63	70.15	228.09
SSA	1.01		138.81		13.63	70.15	222.59
CC2	1.12		153.93		13.63	70.15	237.71
CC1	0.99		136.07		13.63	70.15	219.85
CB2	0.91		125.07		13.63	70.15	208.85
CB1	0.84		115.45		13.63	70.15	199.23
CA2	0.83		114.08		13.63	70.15	197.86
CA1	0.75		103.08		13.63	70.15	186.86
IB2	0.69		94.83		13.63	70.15	178.61
IB1	0.67		92.08		13.63	70.15	175.86
IA2	0.57		78.34		13.63	70.15	162.12
IA1	0.53		72.84		13.63	70.15	156.62
BB2	0.68		93.46		13.63	70.15	177.24
BB1	0.65		89.34		13.63	70.15	173.12
BA2	0.56		76.97		13.63	70.15	160.75
BA1	0.48		65.97		13.63	70.15	149.75
PE2	0.79		108.58		13.63	70.15	192.36
PE1	0.77		105.83		13.63	70.15	189.61
PD2	0.72		98.96		13.63	70.15	182.74

TABLE 4.—RUG–44, CASE-MIX ADJUSTED FEDERAL RATES AND ASSOCIATED INDEXES—URBAN—Continued

RUG III category	Nursing index	Therapy index	Nursing component	Therapy component	Non-case mix therapy component	Non-case mix component	Total rate
PD1	0.70		96.21		13.63	70.15	179.99
PC2	0.65		89.34		13.63	70.15	173.12
PC1	0.64		87.96		13.63	70.15	171.74
PB2	0.51		70.09		13.63	70.15	153.87
PB1	0.50		68.72		13.63	70.15	152.50
PA2	0.49		67.35		13.63	70.15	151.13
PA1	0.46		63.22		13.63	70.15	147.00

TABLE 4A.—RUG–53, CASE-MIX ADJUSTED FEDERAL RATES AND ASSOCIATED INDEXES—URBAN

RUG–53 category	Nursing index	Therapy index	Nursing component	Therapy component	Non-case mix therapy component	Non-case mix component	Total rate
RUX	1.80	2.24	247.39	231.91		70.15	549.45
RUL	1.33	2.24	182.80	231.91		70.15	484.86
RVX	1.46	1.32	200.66	136.66		70.15	407.47
RVL	1.26	1.32	173.17	136.66		70.15	379.98
RHX	1.34	1.10	184.17	113.88		70.15	368.20
RHL	1.30	1.10	178.67	113.88		70.15	362.70
RMX	1.83	1.03	251.52	106.64		70.15	428.31
RML	1.60	1.03	219.90	106.64		70.15	396.69
RLX	1.25	0.79	171.80	81.79		70.15	323.74
RUC	1.21	2.24	166.30	231.91		70.15	468.36
RUB	0.94	2.24	129.19	231.91		70.15	431.25
RUA	0.79	2.24	108.58	231.91		70.15	410.64
RVC	1.16	1.32	159.43	136.66		70.15	366.24
RVB	1.02	1.32	140.19	136.66		70.15	347.00
RVA	0.79	1.32	108.58	136.66		70.15	315.39
RHC	1.15	1.10	158.06	113.88		70.15	342.09
RHB	1.05	1.10	144.31	113.88		70.15	328.34
RHA	0.89	1.10	122.32	113.88		70.15	306.35
RMC	1.09	1.03	149.81	106.64		70.15	326.60
RMB	1.02	1.03	140.19	106.64		70.15	316.98
RMA	0.99	1.03	136.07	106.64		70.15	312.86
RLB	1.08	0.79	148.44	81.79		70.15	300.38
RLA	0.80	0.79	109.95	81.79		70.15	261.89
SE3	1.76		241.89		13.63	70.15	325.67
SE2	1.41		193.79		13.63	70.15	277.57
SE1	1.19		163.55		13.63	70.15	247.33
SSC	1.16		159.43		13.63	70.15	243.21
SSB	1.07		147.06		13.63	70.15	230.84
SSA	1.03		141.56		13.63	70.15	225.34
CC2	1.15		158.06		13.63	70.15	241.84
CC1	1.01		138.81		13.63	70.15	222.59
CB2	0.93		127.82		13.63	70.15	211.60
CB1	0.86		118.20		13.63	70.15	201.98
CA2	0.85		116.82		13.63	70.15	200.60
CA1	0.77		105.83		13.63	70.15	189.61
IB2	0.70		96.21		13.63	70.15	179.99
IB1	0.68		93.46		13.63	70.15	177.24
IA2	0.59		81.09		13.63	70.15	164.87
IA1	0.54		74.22		13.63	70.15	158.00
BB2	0.69		94.83		13.63	70.15	178.61
BB1	0.66		90.71		13.63	70.15	174.49
BA2	0.57		78.34		13.63	70.15	162.12
BA1	0.49		67.35		13.63	70.15	151.13
PE2	0.80		109.95		13.63	70.15	193.73
PE1	0.78		107.20		13.63	70.15	190.98
PD2	0.74		101.71		13.63	70.15	185.49
PD1	0.72		98.96		13.63	70.15	182.74
PC2	0.67		92.08		13.63	70.15	175.86
PC1	0.65		89.34		13.63	70.15	173.12
PB2	0.52		71.47		13.63	70.15	155.25
PB1	0.51		70.09		13.63	70.15	153.87
PA2	0.50		68.72		13.63	70.15	152.50
PA1	0.48		65.97		13.63	70.15	149.75

TABLE 5.—RUG–44, CASE-MIX ADJUSTED FEDERAL RATES AND ASSOCIATED INDEXES—RURAL

RUG III category	Nursing index	Therapy index	Nursing component	Therapy component	Non-case mix therapy component	Non-case mix component	Total rate
RUC	1.30	2.25	170.69	268.61		71.45	510.75
RUB	0.95	2.25	124.74	268.61		71.45	464.80
RUA	0.78	2.25	102.41	268.61		71.45	442.47
RVC	1.13	1.41	148.37	168.33		71.45	388.15
RVB	1.04	1.41	136.55	168.33		71.45	376.33
RVA	0.81	1.41	106.35	168.33		71.45	346.13
RHC	1.26	0.94	165.44	112.22		71.45	349.11
RHB	1.06	0.94	139.18	112.22		71.45	322.85
RHA	0.87	0.94	114.23	112.22		71.45	297.90
RMC	1.35	0.77	177.26	91.92		71.45	340.63
RMB	1.09	0.77	143.12	91.92		71.45	306.49
RMA	0.96	0.77	126.05	91.92		71.45	289.42
RLB	1.11	0.43	145.74	51.33		71.45	268.52
RLA	0.80	0.43	105.04	51.33		71.45	227.82
SE3	1.70		223.21		14.56	71.45	309.22
SE2	1.39		182.51		14.56	71.45	268.52
SE1	1.17		153.62		14.56	71.45	239.63
SSC	1.13		148.37		14.56	71.45	234.38
SSB	1.05		137.87		14.56	71.45	223.88
SSA	1.01		132.61		14.56	71.45	218.62
CC2	1.12		147.06		14.56	71.45	233.07
CC1	0.99		129.99		14.56	71.45	216.00
CB2	0.91		119.48		14.56	71.45	205.49
CB1	0.84		110.29		14.56	71.45	196.30
CA2	0.83		108.98		14.56	71.45	194.99
CA1	0.75		98.48		14.56	71.45	184.49
IB2	0.69		90.60		14.56	71.45	176.61
IB1	0.67		87.97		14.56	71.45	173.98
IA2	0.57		74.84		14.56	71.45	160.85
IA1	0.53		69.59		14.56	71.45	155.60
BB2	0.68		89.28		14.56	71.45	175.29
BB1	0.65		85.35		14.56	71.45	171.36
BA2	0.56		73.53		14.56	71.45	159.54
BA1	0.48		63.02		14.56	71.45	149.03
PE2	0.79		103.73		14.56	71.45	189.74
PE1	0.77		101.10		14.56	71.45	187.11
PD2	0.72		94.54		14.56	71.45	180.55
PD1	0.70		91.91		14.56	71.45	177.92
PC2	0.65		85.35		14.56	71.45	171.36
PC1	0.64		84.03		14.56	71.45	170.04
PB2	0.51		66.96		14.56	71.45	152.97
PB1	0.50		65.65		14.56	71.45	151.66
PA2	0.49		64.34		14.56	71.45	150.35
PA1	0.46		60.40		14.56	71.45	146.41

TABLE 5A.—RUG–53, CASE-MIX ADJUSTED FEDERAL RATES AND ASSOCIATED INDEXES—RURAL

RUG–53 category	Nursing index	Therapy index	Nursing component	Therapy component	Non-case mix therapy component	Non-case mix component	Total rate
RUX	1.8	2.24	236.34	267.41		71.45	575.20
RUL	1.33	2.24	174.63	267.41		71.45	513.49
RVX	1.46	1.32	191.70	157.58		71.45	420.73
RVL	1.26	1.32	165.44	157.58		71.45	394.47
RHX	1.34	1.10	175.94	131.32		71.45	378.71
RHL	1.3	1.10	170.69	131.32		71.45	373.46
RMX	1.83	1.03	240.28	122.96		71.45	434.69
RML	1.6	1.03	210.08	122.96		71.45	404.49
RLX	1.25	0.79	164.13	94.31		71.45	329.89
RUC	1.21	2.24	158.87	267.41		71.45	497.73
RUB	0.94	2.24	123.42	267.41		71.45	462.28
RUA	0.79	2.24	103.73	267.41		71.45	442.59
RVC	1.16	1.32	152.31	157.58		71.45	381.34
RVB	1.02	1.32	133.93	157.58		71.45	362.96
RVA	0.79	1.32	103.73	157.58		71.45	332.76
RHC	1.15	1.10	151.00	131.32		71.45	353.77
RHB	1.05	1.10	137.87	131.32		71.45	340.64
RHA	0.89	1.10	116.86	131.32		71.45	319.63
RMC	1.09	1.03	143.12	122.96		71.45	337.53

TABLE 5A.—RUG–53, CASE-MIX ADJUSTED FEDERAL RATES AND ASSOCIATED INDEXES—RURAL—Continued

RUG–53 category	Nursing index	Therapy index	Nursing component	Therapy component	Non-case mix therapy component	Non-case mix component	Total rate
RMB	1.02	1.03	133.93	122.96		71.45	328.34
RMA	0.99	1.03	129.99	122.96		71.45	324.40
RLB	1.08	0.79	141.80	94.31		71.45	307.56
RLA	0.80	0.79	105.04	94.31		71.45	270.80
SE3	1.76		231.09		14.56	71.45	317.10
SE2	1.41		185.13		14.56	71.45	271.14
SE1	1.19		156.25		14.56	71.45	242.26
SSC	1.16		152.31		14.56	71.45	238.32
SSB	1.07		140.49		14.56	71.45	226.50
SSA	1.03		135.24		14.56	71.45	221.25
CC2	1.15		151.00		14.56	71.45	237.01
CC1	1.01		132.61		14.56	71.45	218.62
CB2	0.93		122.11		14.56	71.45	208.12
CB1	0.86		112.92		14.56	71.45	198.93
CA2	0.85		111.61		14.56	71.45	197.62
CA1	0.77		101.10		14.56	71.45	187.11
IB2	0.70		91.91		14.56	71.45	177.92
IB1	0.68		89.28		14.56	71.45	175.29
IA2	0.59		77.47		14.56	71.45	163.48
IA1	0.54		70.90		14.56	71.45	156.91
BB2	0.69		90.60		14.56	71.45	176.61
BB1	0.66		86.66		14.56	71.45	172.67
BA2	0.57		74.84		14.56	71.45	160.85
BA1	0.49		64.34		14.56	71.45	150.35
PE2	0.80		105.04		14.56	71.45	191.05
PE1	0.78		102.41		14.56	71.45	188.42
PD2	0.74		97.16		14.56	71.45	183.17
PD1	0.72		94.54		14.56	71.45	180.55
PC2	0.67		87.97		14.56	71.45	173.98
PC1	0.65		85.35		14.56	71.45	171.36
PB2	0.52		68.28		14.56	71.45	154.29
PB1	0.51		66.96		14.56	71.45	152.97
PA2	0.50		65.65		14.56	71.45	151.66
PA1	0.48		63.02		14.56	71.45	149.03

C. Wage Index Adjustment to Federal Rates

Section 1888(e)(4)(G)(ii) of the Act requires that we adjust the Federal rates to account for differences in area wage levels, using a wage index that we find appropriate. Since the inception of a PPS for SNFs, we have used hospital wage data in developing a wage index to be applied to SNFs. We propose to continue that practice for FY 2006, as we continue to believe that in the absence of SNF-specific wage data, using the hospital wage index is appropriate and reasonable for the SNF PPS.

The wage index adjustment would be applied to the proposed labor-related portion of the Federal rate, which is 76.087 percent of the total rate. This percentage reflects the labor-related relative importance for FY 2006. The labor-related relative importance is calculated from the SNF market basket, and approximates the labor-related portion of the total costs after taking into account historical and projected price changes between the base year and FY 2006. The price proxies that move the different cost categories in the market basket do not necessarily change at the same rate, and the relative importance captures these changes. Accordingly, the relative importance figure more closely reflects the cost share weights for FY 2006 than the base year weights from the SNF market basket.

We calculate the labor-related relative importance for FY 2006 in four steps. First, we compute the FY 2006 price index level for the total market basket and each cost category of the market basket. Second, we calculate a ratio for each cost category by dividing the FY 2006 price index level for that cost category by the total market basket price index level. Third, we determine the FY 2006 relative importance for each cost category by multiplying this ratio by the base year (FY 1997) weight. Finally, we sum the FY 2006 relative importance for each of the labor-related cost categories (wages and salaries, employee benefits, nonmedical professional fees, labor-intensive services, and capital-related expenses) to produce the FY 2006 labor-related relative importance. Tables 6 and 7 show the Federal rates by labor-related and non-labor-related components for the existing 44 group RUG classification system. Tables 6a and 7a show the Federal rates by labor-related and non-labor-related components for the proposed RUG–53 classification system.

TABLE 6.—RUG–44, CASE-MIX ADJUSTED FEDERAL RATES FOR URBAN SNFS BY LABOR AND NON-LABOR COMPONENT

RUG III category	Total rate	Labor portion	Non-labor portion
RUC	481.76	366.56	115.20
RUB	433.66	329.96	103.70

TABLE 6.—RUG–44, CASE-MIX ADJUSTED FEDERAL RATES FOR URBAN SNFS BY LABOR AND NON-LABOR COMPONENT—Continued

RUG III category	Total rate	Labor portion	Non-labor portion
RUA	410.29	312.18	98.11
RVC	371.44	282.62	88.82
RVB	359.07	273.21	85.86
RVA	327.46	249.15	78.31
RHC	340.64	259.18	81.46
RHB	313.16	238.27	74.89
RHA	287.04	218.40	68.64
RMC	335.41	255.20	80.21
RMB	299.68	228.02	71.66
RMA	281.81	214.42	67.39
RLB	267.23	203.33	63.90
RLA	224.62	170.91	53.71
SE3	317.43	241.52	75.91
SE2	274.82	209.10	65.72
SE1	244.58	186.09	58.49
SSC	239.09	181.92	57.17
SSB	228.09	173.55	54.54
SSA	222.59	169.36	53.23
CC2	237.71	180.87	56.84
CC1	219.85	167.28	52.57
CB2	208.85	158.91	49.94
CB1	199.23	151.59	47.64
CA2	197.86	150.55	47.31
CA1	186.86	142.18	44.68
IB2	178.61	135.90	42.71
IB1	175.86	133.81	42.05
IA2	162.12	123.35	38.77
IA1	156.62	119.17	37.45
BB2	177.24	134.86	42.38
BB1	173.12	131.72	41.40
BA2	160.75	122.31	38.44
BA1	149.75	113.94	35.81
PE2	192.36	146.36	46.00
PE1	189.61	144.27	45.34
PD2	182.74	139.04	43.70
PD1	179.99	136.95	43.04
PC2	173.12	131.72	41.40
PC1	171.74	130.67	41.07
PB2	153.87	117.08	36.79
PB1	152.50	116.03	36.47
PA2	151.13	114.99	36.14
PA1	147.00	111.85	35.15

TABLE 6A.—RUG–53, CASE-MIX ADJUSTED FEDERAL RATES FOR URBAN SNFS BY LABOR AND NON-LABOR COMPONENT

RUG 53 category	Total rate	Labor portion	Non-labor portion
RUX	549.45	418.06	131.39
RUL	484.86	368.92	115.94
RVX	407.47	310.03	97.44
RVL	379.98	289.12	90.86
RHX	368.20	280.15	88.05
RHL	362.70	275.97	86.73
RMX	428.31	325.89	102.42
RML	396.69	301.83	94.86
RLX	323.74	246.32	77.42
RUC	468.36	356.36	112.00
RUB	431.25	328.13	103.12
RUA	410.64	312.44	98.20
RVC	366.24	278.66	87.58
RVB	347.00	264.02	82.98
RVA	315.39	239.97	75.42
RHC	342.09	260.29	81.80
RHB	328.34	249.82	78.52
RHA	306.35	233.09	73.26
RMC	326.60	248.50	78.10
RMB	316.98	241.18	75.80
RMA	312.86	238.05	74.81

TABLE 6A.—RUG–53, CASE-MIX ADJUSTED FEDERAL RATES FOR URBAN SNFS BY LABOR AND NON-LABOR COMPONENT—Continued

RUG 53 category	Total rate	Labor portion	Non-labor portion
RLB	300.38	228.55	71.83
RLA	261.89	199.26	62.63
SE3	325.67	247.79	77.88
SE2	277.57	211.19	66.38
SE1	247.33	188.19	59.14
SSC	243.21	185.05	58.16
SSB	230.84	175.64	55.20
SSA	225.34	171.45	53.89
CC2	241.84	184.01	57.83
CC1	222.59	169.36	53.23
CB2	211.60	161.00	50.60
CB1	201.98	153.68	48.30
CA2	200.60	152.63	47.97
CA1	189.61	144.27	45.34
IB2	179.99	136.95	43.04
IB1	177.24	134.86	42.38
IA2	164.87	125.44	39.43
IA1	158.00	120.22	37.78
BB2	178.61	135.90	42.71
BB1	174.49	132.76	41.73
BA2	162.12	123.35	38.77
BA1	151.13	114.99	36.14
PE2	193.73	147.40	46.33
PE1	190.98	145.31	45.67
PD2	185.49	141.13	44.36
PD1	182.74	139.04	43.70
PC2	175.86	133.81	42.05
PC1	173.12	131.72	41.40
PB2	155.25	118.13	37.12
PB1	153.87	117.08	36.79
PA2	152.50	116.03	36.47
PA1	149.75	113.94	35.81

TABLE 7.—RUG–44, CASE-MIX ADJUSTED FEDERAL RATES FOR RURAL SNFS BY LABOR AND NON-LABOR COMPONENT

RUG III category	Total rate	Labor portion	Non-labor portion
RUC	510.75	388.61	122.14
RUB	464.80	353.65	111.15
RUA	442.47	336.66	105.81
RVC	388.15	295.33	92.82
RVB	376.33	286.34	89.99
RVA	346.13	263.36	82.77
RHC	349.11	265.63	83.48
RHB	322.85	245.65	77.20
RHA	297.90	226.66	71.24
RMC	340.63	259.18	81.45
RMB	306.49	233.20	73.29
RMA	289.42	220.21	69.21
RLB	268.52	204.31	64.21
RLA	227.82	173.34	54.48
SE3	309.22	235.28	73.94
SE2	268.52	204.31	64.21
SE1	239.63	182.33	57.30
SSC	234.38	178.33	56.05
SSB	223.88	170.34	53.54
SSA	218.62	166.34	52.28
CC2	233.07	177.34	55.73
CC1	216.00	164.35	51.65
CB2	205.49	156.35	49.14
CB1	196.30	149.36	46.94
CA2	194.99	148.36	46.63
CA1	184.49	140.37	44.12
IB2	176.61	134.38	42.23
IB1	173.98	132.38	41.60
IA2	160.85	122.39	38.46
IA1	155.60	118.39	37.21
BB2	175.29	133.37	41.92

TABLE 7.—RUG–44, CASE-MIX ADJUSTED FEDERAL RATES FOR RURAL SNFS BY LABOR AND NON-LABOR COMPONENT—Continued

RUG III category	Total rate	Labor portion	Non-labor portion
BB1	171.36	130.38	40.98
BA2	159.54	121.39	38.15
BA1	149.03	113.39	35.64
PE2	189.74	144.37	45.37
PE1	187.11	142.37	44.74
PD2	180.55	137.38	43.17
PD1	177.92	135.37	42.55
PC2	171.36	130.38	40.98
PC1	170.04	129.38	40.66
PB2	152.97	116.39	36.58
PB1	151.66	115.39	36.27
PA2	150.35	114.40	35.95
PA1	146.41	111.40	35.01

TABLE 7A.—RUG–53 CASE-MIX ADJUSTED FEDERAL RATES FOR RURAL SNFS BY LABOR AND NON-LABOR COMPONENT

RUG–53 category	Total rate	Labor portion	Non-labor portion
RUX	575.20	437.65	137.55
RUL	513.49	390.70	122.79
RVX	420.73	320.12	100.61
RVL	394.47	300.14	94.33
RHX	378.71	288.15	90.56
RHL	373.46	284.15	89.31
RMX	434.69	330.74	103.95
RML	404.49	307.76	96.73
RLX	329.89	251.00	78.89
RUC	497.73	378.71	119.02
RUB	462.28	351.73	110.55
RUA	442.59	336.75	105.84
RVC	381.34	290.15	91.19
RVB	362.96	276.17	86.79
RVA	332.76	253.19	79.57
RHC	353.77	269.17	84.60
RHB	340.64	259.18	81.46
RHA	319.63	243.20	76.43
RMC	337.53	256.82	80.71
RMB	328.34	249.82	78.52
RMA	324.40	246.83	77.57
RLB	307.56	234.01	73.55
RLA	270.80	206.04	64.76
SE3	317.10	241.27	75.83
SE2	271.14	206.30	64.84
SE1	242.26	184.33	57.93
SSC	238.32	181.33	56.99
SSB	226.50	172.34	54.16
SSA	221.25	168.34	52.91
CC2	237.01	180.33	56.68
CC1	218.62	166.34	52.28
CB2	208.12	158.35	49.77
CB1	198.93	151.36	47.57
CA2	197.62	150.36	47.26
CA1	187.11	142.37	44.74
IB2	177.92	135.37	42.55
IB1	175.29	133.37	41.92
IA2	163.48	124.39	39.09
IA1	156.91	119.39	37.52
BB2	176.61	134.38	42.23
BB1	172.67	131.38	41.29
BA2	160.85	122.39	38.46
BA1	150.35	114.40	35.95
PE2	191.05	145.36	45.69
PE1	188.42	143.36	45.06
PD2	183.17	139.37	43.80
PD1	180.55	137.38	43.17
PC2	173.98	132.38	41.60
PC1	171.36	130.38	40.98
PB2	154.29	117.39	36.90

TABLE 7A.—RUG–53 CASE-MIX ADJUSTED FEDERAL RATES FOR RURAL SNFS BY LABOR AND NON-LABOR COMPONENT—Continued

RUG–53 category	Total rate	Labor portion	Non-labor portion
PB1	152.97	116.39	36.58
PA2	151.66	115.39	36.27
PA1	149.03	113.39	35.64

Section 1888(e)(4)(G)(ii) of the Act also requires that we apply this wage index in a manner that does not result in aggregate payments that are greater or lesser than would otherwise be made in the absence of the wage adjustment. For FY 2006 (Federal rates effective October 1, 2005), we would apply the most recent wage index using the hospital wage data, and apply an adjustment to fulfill the budget neutrality requirement. This requirement would be met by multiplying each of the components of the unadjusted Federal rates by a factor equal to the ratio of the volume weighted mean wage adjustment factor (using the wage index from the previous year) to the volume weighted mean wage adjustment factor, using the wage index for the FY beginning October 1, 2005. The same volume weights are used in both the numerator and denominator and will be derived from 1997 Medicare Provider Analysis and Review File (MEDPAR) data. The wage adjustment factor used in this calculation is defined as the labor share of the rate component multiplied by the wage index plus the non-labor share. The proposed budget neutrality factor for this year is 1.0011. However, this may change in the final rule. In order to give the public a sense of the magnitude of this adjustment, last year's factor was 1.0011.

D. Proposed Area Wage Index

Section 1888(e)(4)(G)(ii) of the Act requires that we adjust the Federal rates to account for differences in area wage levels, using a wage index that we find appropriate. Since the inception of a PPS for SNFs, we have used hospital wage data in developing a wage index to be applied to SNFs. As noted previously, we are proposing to continue that practice for FY 2006.

In our July 30, 2004 update notice, we acknowledged that on June 6, 2003, the Office of Management and Budget (OMB) issued ''OMB Bulletin No.03–04,'' which announced revised definitions for Metropolitan Statistical Areas, and new definitions of Micropolitan Statistical Areas and Combined Statistical Areas. A copy of the Bulletin may be obtained at the following Internet address: *http://www.whitehouse.gov/omb/bulletins/b03–04.html.* At that time, we did not propose to apply these new definitions known as the Core-Based Statistical Areas (CBSAs). After further analysis, we are proposing to use the OMB-revised definitions to adjust the FY 2006 SNF PPS payment rates. The Hospital Inpatient PPS (IPPS) is applying these revised definitions as discussed in the August 11, 2004 IPPS final rule (69 FR 49207).

1. Proposed Revision of SNF PPS Geographic Classifications

As discussed in the May 12, 1998 SNF PPS interim final rule, which implemented the SNF PPS (63 FR 26252), in establishing an adjustment for area wage levels under § 413.337(a)(ii), the labor-related portion of a SNF's Federal prospective payment is adjusted by using an appropriate wage index. As set forth in § 413.337(a)(ii), a SNF's wage index is determined based on the location of the SNF in an urban or rural area as defined in § 412.62(f)(1)(ii) and (f)(1)(iii), respectively. In general, an urban area is defined as a Metropolitan Statistical Area (MSA) or New England County Metropolitan Area (NECMA) as defined by OMB. Under § 412.62(f)(1)(iii), a rural area is defined as any area outside of an urban area. The urban and rural area geographic classifications defined in § 412.62(f)(1)(ii) and (f)(1)(iii), respectively, were used under the IPPS from FYs 1985 through 2004 (§ 412.63(b)), and have been used under the SNF PPS since it was implemented for cost reporting periods beginning on or after July 1, 1998. The wage index used for the SNF PPS is calculated using the IPPS wage index data on the basis of the labor market area in which the acute care hospital is located, but without taking into account geographic reclassification under sections 1886(d)(8) and (d)(10) of the Act. The applicable SNF wage index value is assigned to a SNF on the basis of the labor market area in which the SNF is geographically located.

Section 4410 of the BBA provides that for the purposes of section 1886(d)(3)(E) of the Act, the area wage index applicable to hospitals located in an urban area of a State may not be less than the area wage index applicable to hospitals located in rural areas in the State. Consistent with past SNF policy, we treat this provision, commonly referred to as the ''rural floor,'' as applicable to acute inpatient hospitals and not SNFs. Therefore, the hospital wage index used for SNFs is commonly referred to as ''pre-floor,'' indicating that the ''rural floor'' provision is not applied.

The current SNF PPS labor market areas are defined based on the definitions of MSAs, Primary MSAs (PMSAs), and NECMAs issued by the OMB (commonly referred to collectively as ''MSAs''). These MSA definitions, which are discussed in greater detail below, are currently used under the SNF PPS and other prospective payment systems such as the long-term care hospital PPS (LTCH PPS), the inpatient psychiatric facility PPS (IPF PPS), the home health agency PPS (HHA PPS), and the inpatient rehabilitation facility PPS (IRF PPS). In the August 11, 2004 IPPS final rule (67 FR 49026 through 49034), revised labor market area definitions were adopted under § 412.64(b), which were effective October 1, 2004 for acute care hospitals. The new standards, CBSAs, were announced by OMB in late 2000 and are discussed in greater detail below.

2. Current SNF PPS Labor Market Areas Based on MSAs

As noted above, we currently define labor market areas based on the definitions of MSAs, PMSAs, and NECMAs issued by the OMB. The OMB also designates Consolidated MSAs (CMSAs). A CMSA is a metropolitan area with a population of one million or more, comprising two or more PMSAs (identified by their separate economic and social character). For purposes of the wage index, we use the PMSAs rather than CMSAs because they allow a more precise breakdown of labor costs. If a metropolitan area is not designated as part of a PMSA, we use the applicable MSA.

These different designations use counties as the building blocks upon which they are based. Therefore, providers are assigned to either an MSA,

PMSA, or NECMA based on whether the county in which the provider is located is part of that area. All of the counties in a State outside a designated MSA, PMSA, or NECMA are designated as rural. For the purposes of calculating the wage index, we combine all of the counties in a State outside a designated MSA, PMSA, or NECMA together to calculate the statewide rural wage index for each State.

3. Core-Based Statistical Areas

The OMB reviews its Metropolitan Area (MA) definitions preceding each decennial census. As discussed in the August 11, 2004 IPPS final rule (69 FR 49207), in the fall of 1998, the OMB chartered the Metropolitan Area Standards Review Committee to examine the MA standards and develop recommendations for possible changes to those standards. Three notices related to the review of the standards, providing an opportunity for public comment on the recommendations of the Committee, were published in the **Federal Register** on the following dates: December 21, 1998 (63 FR 70526); October 20, 1999 (64 FR 56628); and August 22, 2000 (65 FR 51060).

In the December 27, 2000 **Federal Register** (65 FR 82228 through 82238), the OMB announced its new standards. In that notice, the OMB defines a Core-Based Statistical Area (CBSA), beginning in 2003, as ''a geographic entity associated with at least one core of 10,000 or more population, plus adjacent territory that has a high degree of social and economic integration with the core as measured by commuting ties.'' The standards designate and define two categories of CBSAs: MSAs and Micropolitan Statistical Areas (65 FR 82235).

According to the OMB, MSAs are based on urbanized areas of 50,000 or more population, and Micropolitan Statistical Areas (referred to in this discussion as Micropolitan Areas) are based on urban clusters of at least 10,000 population, but less than 50,000 population. Counties that do not fall within CBSAs (either MSAs or Micropolitan Areas) are deemed ''Outside CBSAs.'' In the past, the OMB defined MSAs around areas with a minimum core population of 50,000, and smaller areas were ''Outside MSAs.'' On June 6, 2003, the OMB announced the new CBSAs, comprised of MSAs and the new Micropolitan Areas based on Census 2000 data. (A copy of the announcement may be obtained at the following Internet address: *http://www.whitehouse.gov/omb/bulletins/fy04/b04–03.html.)*

The new CBSA designations recognize 49 new (urban) MSAs and 565 new Micropolitan Areas, and revise the composition of many of the existing (urban) MSAs. There are 1,090 counties in MSAs under the new CBSA designations (previously, there were 848 counties in MSAs). Of these 1,090 counties, 737 are in the same MSA as they were before the change in designations, 65 are in a different MSA, and 288 were not previously designated to any MSA. There are 674 counties in Micropolitan Areas. Of these, 41 were previously in an MSA, while 633 were not previously designated to an MSA. There are five counties that previously were designated to an MSA but are no longer designated to either an MSA or a new Micropolitan Area: Carter County, KY; St. James Parish, LA; Kane County, UT; Culpepper County, VA; and King George County, VA. For a more detailed discussion of the conceptual basis of the new CBSAs, refer to the August 11, 2004 IPPS final rule (67 FR 49026 through 49034).

4. Proposed Revisions to the SNF PPS Labor Market Areas

[If you choose to comment on issues in this section, please include the caption ''*Proposed Revisions to the SNF PPS Labor Market Areas*'' at the beginning of your comments.]

In its June 6, 2003 announcement, the OMB cautioned that these new definitions ''should not be used to develop and implement Federal, State, and local nonstatistical programs and policies without full consideration of the effects of using these definitions for such purposes. These areas should not serve as a general-purpose geographic framework for nonstatistical activities, and they may or may not be suitable for use in program funding formulas.''

In the SNF PPS update notice for FY 2005 (69 FR 45786, July 30, 2004), we noted that the recently-published IPPS proposed rule for FY 2005 had discussed some of the problems and concerns associated with using these new definitions, and had invited public comment on them. Accordingly, we decided to defer proposing any new labor market definitions in the SNF context at that time, in order to allow the public sufficient time and opportunity to consider and provide comments on this issue. Although the June 30, 2004 update notice also invited comments on the possible application of the new definitions to the SNF PPS, we received no written comments on the use of the new definitions specifically in the SNF context; however, we did receive a few phone calls inquiring about the methodology applied in the August 11, 2004 IPPS final rule (69 FR 49207). We believe that sufficient time has now elapsed for interested parties to consider and react to the new OMB definitions and, accordingly, we are now proposing to make the changes discussed below.

We have continued to use MSAs to define labor market areas for purposes of the wage index. For the SNF prospective payment system, the statute provides the Secretary with broad authority to use an ''appropriate wage index as determined by the Secretary.'' We believe MSAs are a reasonable and appropriate proxy for developing geographic areas for purposes of adjusting for wage differences in SNF PPS and for many of the same reasons stated in the various IPPS rules over the years where this issue has been exhaustively examined. We also note that MSAs are used to define labor market areas for purposes of the wage index for many of the other Medicare payment systems (for example, IRF PPS, HHA PPS, and IPF PPS).

First, historically, Medicare prospective payment systems have utilized MA definitions developed by OMB. For example, in discussing the adoption of the MSA designation for the IPPS area labor adjustment, the IPPS proposed rule for FY 1985 (49 FR 27426, July 3, 1984) stated:

[i]n administering a national payment system, we must have a national classification system built on clear, objective standards. Otherwise the program becomes increasingly difficult to administer because the distinction between rural and urban hospitals is blurred. We believe that the MSA system is the only one that currently meets the requirements for use as a classification system in a national payment program. The MSA classification system is a statistical standard developed for use by Federal agencies in the production, analysis, and publication of data on metropolitan areas. The standards have been developed with the aim of producing definitions that will be as consistent as possible for all MSAs nationwide.

In addition, in numerous instances, the Congress has recognized that the areas developed by OMB may be used for differentiating among geographic areas for Medicare payment purposes. For example, in the IPPS statutory sections, the Congress defines an ''urban area'' as ''an area within a Metropolitan Statistical Area (as defined by the Office of Management and Budget) or within such similar area as the Secretary has recognized'' (section 1886(d)(2)(D) of the Act). Similarly, in the sections of the

statute governing the guidelines to be used by the Medicare Geographic Classification Review Board for purposes of reclassification, the Congress directed the Secretary to create guidelines for ''determining whether the county in which the hospital is located should be treated as being a part of a particular [MSA]'' (sections 1886(d)(10)(A) and 1886(d)(10)(D)(i)(II) of the Act). Thus, the Congress has accepted and ratified the use of MSAs as an inherently rational manner of dividing up labor-market areas for purposes of Medicare payments.

The process used by OMB to develop the MSAs creates geographic areas based upon characteristics that we believe also generally reflect the characteristics of unified labor market areas. For example, the CBSAs reflect a core population plus an adjacent territory that reflects a high degree of social and economic integration. This integration is measured by commuting ties, thus demonstrating that these areas may draw workers from the same general areas. In addition, the most recent CBSAs reflect the most up to date information. The OMB reviews its MA definitions preceding each decennial census to reflect recent population changes, and the CBSAs are based on the Census 2000 data. Finally, in the context of the IPPS, CMS has reviewed alternative methods for determining geographic areas for purposes of the wage index, and in each case, has decided to retain the OMB designations rather than replace these designations with alternatives.

Because we believe that we have broad authority to create labor market areas, and because we also believe that the OMB's latest MA designations accurately reflect the local economies and wage levels of the areas in which hospitals are currently located, we are proposing to adopt the revised labor market area designations based on the OMB's CBSA designations.

When we implemented the wage index adjustment at § 413.337(a)(ii) under the SNF PPS in the May 12, 1998 SNF PPS interim final rule (63 FR 26252), we explained that the SNF PPS wage index adjustment was intended to reflect the relative hospital wage levels in the geographic area of the hospital as compared to the national average hospital wage level. Because we believe that the OMB's CBSA designations based on Census 2000 data reflect the most recent available geographic classifications (MA definitions), we are proposing to revise the labor market area definitions used under the SNF PPS. Specifically, we are proposing to revise the SNF PPS labor market definitions based on the OMB's new CBSA designations (as discussed in greater detail below) effective for SNF PPS services occurring on or after October 1, 2005. Accordingly, we are proposing to revise § 413.337(a)(ii) to specify that for services furnished on or after October 1, 2005, the application of the wage index under the SNF PPS would be made on the basis of the location of the facility in an urban or rural area as defined in § 412.64(b)(1)(ii)(A) through (C).

We note that the OMB's new CBSA designations are the same labor market area definitions implemented under the IPPS at § 412.64(b), which were effective for those hospitals beginning October 1, 2004, as discussed in the August 11, 2004 IPPS final rule (69 FR 49026 through 49034). The similarity between the IPPS and the SNF PPS includes the adoption in the initial implementation of the SNF PPS of the same labor market area definitions under the SNF PPS that existed under the IPPS at that time, as well as the use of acute care hospitals' wage data in calculating the SNF PPS wage index. Therefore, we believe that proposing to revise the SNF PPS labor market area definitions based on OMB's CBSA designations is consistent with our historical practice of generally modeling SNF PPS wage index policy after IPPS wage index policy.

Below, we discuss the composition of the proposed SNF PPS labor market areas based on the OMB's new CBSA designations.

a. New England MSAs

As stated above, under the SNF PPS, we currently use NECMAs to define labor market areas in New England, because these are county-based designations rather than the 1990 MSA definitions for New England, which used minor civil divisions such as cities and towns. Under the current MSA definitions, NECMAs provided more consistency in labor market definitions for New England compared with the rest of the country, where MSAs are county-based. Under the new CBSAs, the OMB has now defined the MSAs and Micropolitan Areas in New England on the basis of counties. The OMB also established New England City and Town Areas, which are similar to the previous New England MSAs.

In order to create consistency among all labor market areas and to maintain these areas on the basis of counties, we are proposing to use the county-based areas for all MSAs in the nation, including those in New England. Census 2000 has now defined the New England area based on counties, creating a city- and town-based system as an alternative. We believe that adopting county-based labor market areas for the entire country except those in New England would lead to inconsistencies in our designations. Adopting county-based labor market areas for the entire country provides consistency and stability in Medicare SNF PPS program payment because all of the labor market areas throughout the country, including New England, would be defined using the same system (that is, counties) rather than different systems in different areas of the country, thus minimizing programmatic complexity.

In addition, we have consistently employed a county-based system for New England for precisely that reason: To maintain consistency with the labor market definitions used throughout the country. We note that this is consistent with the implementation of the CBSA designations under the IPPS for New England (see August 11, 2004 (69 FR 49028)). Accordingly, under the SNF PPS we are proposing to use the New England MSAs as determined under the proposed new CBSA-based labor market area definitions in defining the proposed revised SNF PPS labor market areas.

b. Metropolitan Divisions

Under the OMB's new CBSA designations, a Metropolitan Division is a county or group of counties within a CBSA that contains a core population of at least 2.5 million, representing an employment center, plus adjacent counties associated with the main county or counties through commuting ties. A county qualifies as a main county if 65 percent or more of its employed residents work within the county and the ratio of the number of jobs located in the county to the number of employed residents is at least 0.75 percent. A county qualifies as a secondary county if 50 percent or more, but less than 65 percent, of its employed residents work within the county and the ratio of the number of jobs located in the county to the number of employed residents is at least 0.75 percent. After all the main and secondary counties are identified and grouped, each additional county that already has qualified for inclusion in the MSA falls within the Metropolitan Division associated with the main/secondary county or counties with which the county at issue has the highest employment interchange measure. Counties in a Metropolitan Division must be contiguous (see 65 FR 82236).

As noted above, in the past, the OMB designated CMSAs as Metropolitan Areas with a population of one million

or more and comprised of two or more PMSAs. Under the SNF PPS, we currently use the PMSAs rather than CMSAs to define labor market areas because they comprise a smaller geographic area with potentially varying labor costs due to different local economies. We believe that CMSAs may be too large an area to reflect accurately the local labor costs of all of the individual SNFs included in that relatively ''large'' area. Similarly, we believe that Metropolitan Divisions under the CBSA designations may be too large an area to reflect accurately the local labor costs of all of the individual SNFs included in that relatively ''large'' area. Further, Metropolitan Divisions represent the closest approximation to PMSAs and, therefore, would most accurately maintain our current structuring of the SNF PPS labor market areas. Therefore, as implemented under the IPPS (69 FR 49029), we are proposing to use the Metropolitan Divisions where applicable (as described below) under the proposed new CBSA-based labor market area definitions.

In addition to being comparable to the organization of the labor market areas under current MSA designations, we believe that proposing to use Metropolitan Divisions where applicable (as described below) under the SNF PPS would result in a more accurate adjustment for the variation in local labor market areas for SNFs. Specifically, if we recognize the relatively ''larger'' CBSA that comprises two or more Metropolitan Divisions as an independent labor market area for purposes of the wage index, it would be too large and would include the data from too many hospitals to compute a wage index that would accurately reflect the various local labor costs of all of the individual hospitals included in that relatively ''large'' CBSA. By proposing to recognize Metropolitan Divisions where applicable (as described below) under the proposed new CBSA-based labor market area definitions under the SNF PPS, we believe that the local labor costs would be more accurately reflected, thereby resulting in a wage index adjustment that better reflects the variation in the local labor costs of the local economies of the SNFs located in those relatively ''smaller'' areas.

Under the CBSA designations, there are 11 MSAs containing Metropolitan Divisions: Boston; Chicago; Dallas; Detroit; Los Angeles; Miami; New York; Philadelphia; San Francisco; Seattle; and Washington, D.C. Although these MSAs were also CMSAs under the prior definitions, in some cases their areas have been altered. Under the current SNF PPS MSA designations, Boston was a single NECMA. Under the proposed CBSA-based labor market area designations, it would be comprised of 4 Metropolitan Divisions. Los Angeles would go from 4 PMSAs under the current SNF PPS MSA designations to 2 Metropolitan Divisions under the proposed CBSA-based labor market area designations. The New York CMSA would go from 15 PMSAs under the current SNF PPS MSA designations to only 4 Metropolitan Divisions under the proposed CBSA-based labor market area designations. Five PMSAs in Connecticut under the current SNF PPS MSA designations would become separate MSAs under the proposed CBSA-based labor market area designations. The number of PMSAs in New Jersey, under the current SNF PPS MSA designations would go from 5 to 2, with the consolidation of 2 New Jersey PMSAs (Bergen-Passaic and Jersey City) into the New York-Wayne-White Plains, NY–NJ Division, under the proposed CBSA-based labor market area designations. In San Francisco, under the proposed CBSA-based labor market area designations there are only 2 Divisions. Currently, there are 6 PMSAs, some of which are now separate MSAs under the current SNF PPS labor market area designations.

Under the current SNF PPS labor market area designations, Cincinnati, Cleveland, Denver, Houston, Milwaukee, Portland, Sacramento, and San Juan are all designated as CMSAs, but would no longer be designated as CMSAs under the proposed CBSA-based labor market area designations. As noted previously, the population threshold to be designated a CMSA under the current SNF PPS labor market area designations is one million. In most of these cases, counties currently in a PMSA would become a separate, independent MSA under the proposed CBSA-based labor market area designations, leaving only the MSA for the core area under the proposed CBSA-based labor market area designations.

c. Micropolitan Areas

Under the OMB's new CBSA designations, Micropolitan Areas are essentially a third area definition consisting primarily of areas that are currently rural, but also include some or all of areas that are currently designated as urban MSAs. As discussed in greater detail in the August 11, 2004 IPPS final rule (69 FR 49029 through 49032), how these areas are treated would have significant impacts on the calculation and application of the wage index. Specifically, whether or not Micropolitan Areas are included as part of the respective statewide rural wage indexes would affect the value of the Statewide rural wage index of any State that contains a Micropolitan Area. A hospital's classification as urban or rural affects which hospitals' wage data are included in the statewide rural wage index. As discussed above in section II.D.3, we combine all of the counties in a State outside a designated urban area to calculate the statewide rural wage index for each State.

Micropolitan Areas included as part of the statewide rural labor market area would result in an increase to the statewide rural wage index because hospitals located in those Micropolitan Areas typically have higher labor costs than other rural hospitals in the State. Alternatively, as discussed in greater detail below, if Micropolitan Areas would be recognized as independent labor market areas, because there would be so few hospitals in those areas to complete a wage index, the wage indexes for SNFs in those areas could become relatively unstable as they would change considerably from year to year.

We currently use MSAs to define urban labor market areas and group all of the hospitals in counties within each State that are not assigned to an MSA into a statewide rural labor market area. Therefore, we used the terms ''urban'' and ''rural'' wage indexes in the past for ease of reference. However, the introduction of Micropolitan Areas by the OMB potentially complicates this terminology because these areas include many hospitals that are currently included in the statewide rural labor market areas.

We are proposing to treat Micropolitan Areas as rural labor market areas under the SNF PPS for the reasons outlined below. That is, counties that are assigned to a Micropolitan area under the CBSA designations would be treated the same as other ''rural'' counties that are not assigned to either an MSA (Metropolitan Area) or a Micropolitan Area. Therefore, in determining an SNF's applicable wage index (based on IPPS hospital wage index data, as discussed in greater detail below in section II.D.6 of this preamble), we propose that a SNF in a Micropolitan Area under the OMB's CBSA designations would be classified as ''rural'' and would be assigned the statewide rural wage index for the State in which it resides.

In the August 11, 2004 IPPS final rule (69 FR 49029 through 49032), we discussed the impact of treating Micropolitan areas as part of the statewide rural labor market area instead of treating Micropolitan Areas as

independent labor market areas for hospitals paid under the IPPS. As discussed in greater detail in that same final rule, Micropolitan Areas encompass smaller populations than MSAs and tend to include fewer hospitals per Micropolitan Area.

Thus, since Micropolitan Areas tend to include fewer hospitals, recognizing Micropolitan Areas as independent labor market areas would generally increase the potential for dramatic shifts in those areas' wage indexes from one year to the next, because a single hospital (or group of hospitals) could have a disproportionate effect on the wage index of the area. Dramatic shifts in an area's wage index from year to year are problematic and create instability in the payment levels from year to year, which could make fiscal planning for SNFs difficult if we adopted this approach. Therefore, in order to minimize the potential instability in payment levels from year to year, we believe it would be appropriate to treat Micropolitan Areas as part of the statewide rural labor market area under the SNF PPS.

Consistent with the treatment of these areas under the IPPS, we are proposing that Micropolitan Areas be considered a part of the Statewide rural labor market area. Accordingly, we are proposing that the SNF PPS Statewide rural wage index would be determined using acute-care IPPS hospital wage data from hospitals located in non-MSA areas and that the Statewide rural wage index would be assigned to SNFs located in those areas.

When the revised labor market areas based on the OMB's new CBSA designations were adopted under the IPPS beginning on October 1, 2004, a transition to the new designations was established due to the scope and magnitude of the change, in order to mitigate the resulting adverse impact on certain hospitals. As discussed in the August 11, 2004 IPPS final rule (69 FR 49032), during FY 2005, a blend of wage indexes is calculated for those acute care IPPS hospitals experiencing a drop in their wage indexes because of the adoption of the new labor market areas. Also, as described in that same final rule (69 FR 49032), under the IPPS, hospitals that previously had been located in an urban MSA but became rural under the new CBSA definitions are assigned the wage index value of the urban area to which they belonged previously, for 3 years (FYs 2005 through FYs 2007).

We recognize that SNFs will be subject to the same impact as hospitals, and that some SNFs may experience decreases in their wage index as a result of the proposed labor market area changes. At the same time, a significant number of SNFs will benefit from these proposed changes. However, as explained below, we are not proposing a transition period in this proposed rule.

5. Implementation of the Revised Labor Market Areas

Under section 1888(e)(4)(G)(ii) of the Act, the Secretary has the authority to adjust for geographic variations in labor costs by using an appropriate wage index. Moreover, the adjustment must be made in a manner such that aggregate payments would not change if such adjustment were not made.

To facilitate an understanding of the proposed policies related to the proposed change to the SNF PPS labor market areas discussed above, in Table A (MSA/CBSA Crosswalk) of the Addendum of this proposed rule, we are providing a listing of each Social Security Administration (SSA) State and county location code; State and county name; existing MSA-based labor market area designation; MSA-based wage index value; CBSA-based labor market area; and the new CBSA-based wage index value.

When the revised labor market areas based on OMB's new CBSA designations were adopted under the IPPS beginning on October 1, 2004, a transition to the new designations was established due to the scope and fiscal impact of these new boundaries. As discussed in the IPPS final rule (69 FR 49032), during FY 2005, a blend of wage indexes is calculated for those acute care IPPS hospitals experiencing a drop in their wage indexes because of the adoption of the new labor market areas. The most significant impacts will generally be for MSA-based urban hospitals that were designated as rural under the CBSA-based designations.

Because the former MSA-based labor market areas used under the IPPS had been used for payment for over 10 years, we believed it was necessary to provide additional protection, given the scope and potentially significant implications (and the subsequent adverse impact) of these new labor market areas on numerous acute-care hospitals. Therefore, we implemented a transition under the IPPS from the former MSA-based labor market area designation to the new CBSA-based labor market area designation for acute-care hospitals that would receive a lower wage index as a result of the change in the labor market area designations.

As we recognize that SNFs may experience similar changes in their wage indexes as a result of the proposed labor market area changes, we carefully evaluated the impact of the conversion to the proposed wage index structure. During our analysis, we found that a majority of SNFs (61 percent) either maintained the same wage index or would get an increased wage index based on CBSA definitions. Only a very small number of SNFs (4 percent) would experience a decline of 5 percent or more in the wage index based on CBSA designations. We also found that only a very small number of SNFs would experience a change in either rural or urban designation under the CBSA based definitions. Furthermore, we believe the new CBSA definitions may have a positive impact on many counties. For example, most counties which had been included in the rural definitions under the MSA designations but are now designated as urban areas under CBSAs will generally receive an increase in their wage index.

Although a majority of SNFs would not be significantly affected, and we believe that it is not appropriate or necessary to propose a transition to the proposed new CBSA-based labor market areas for the purpose of the SNF PPS wage index, we recognize that there are many options in efficiently implementing the new CBSA geographic designations. Thus, we considered several budget neutral options that would most effectively implement the adoption of the proposed CBSA designations as discussed below.

One option we considered institutes a one-year transition with a blended wage index for all providers. The wage index for each provider would consist of a blend of 50 percent of the FY 2006 MSA-based wage index and 50 percent of the FY 2006 CBSA-based wage index (both based on the FY 2002 hospital wage data). However, we found that while this would help some SNFs that would be adversely affected by the proposed changes to the MSAs, it would also reduce the wage index values (compared to fully adopting the CBSA wage index value) for those SNFs that would be positively affected by the changes. In addition, the budget neutrality factor calculated based on the blended wage index for all SNFs would slightly reduce the unadjusted payment rate for all providers.

A second option we considered was a one-year transition with a blended wage index limited to providers that would experience a decrease due solely to the changes in the labor market definitions. Providers that experience a decrease in their FY 2006 wage index under the CBSA-based definitions compared to the wage index they would have received under the MSA-based definitions (in both cases using FY 2002 hospital wage data) would receive a blended wage

index. The wage index for these providers would consist of a blend of 50 percent of the FY 2006 MSA wage index and 50 percent of the FY 2006 CBSA wage index (both based on the FY 2002 hospital wage data). Providers that would experience a decrease due to changes in the labor market definitions would receive the full FY 2006 CBSA wage index.

When we performed our analysis, we found that the unadjusted payment amounts decreased substantially more under this option than they did either by using the first option discussed above or by fully adopting the CBSA designations. As with the first option, the positive impact of blending in order to decrease the impacts for a relatively small number of SNFs would require reduced payment rates for all providers, including the SNFs receiving a blended wage index.

We also recognize that during FY 2005, as discussed in the August 11, 2004 IPPS final rule (69 FR 49032), a hold harmless policy under IPPS was implemented to minimize the overall impact on hospitals that are currently designated as urban under the MSA designations, but would become rural under the CBSA designations. We considered adopting a hold harmless policy for SNFs, to allow facilities that are currently urban under the MSA definitions (but become rural under the CBSA definitions) to maintain their urban status under the CBSA definitions for one year. However, our analysis shows that only an extremely small number of SNFs would qualify for such a hold harmless policy. As any adjustment requires payments to be made in a budget neutral manner, all providers would have the payment rates reduced for the benefit of that small number of SNFs (1.4 percent) which lose their urban designations. Accordingly, we do not believe it is appropriate or necessary to adopt a hold harmless policy under the SNF PPS for facilities that will experience a change in designation under the CBSA definitions.

We are proposing to adopt for the SNF PPS the new CBSA-based labor market area definitions beginning with the 2006 SNF PPS rate year without a transition period and without a hold harmless policy. We also note that OMB in the past has announced MSA changes on an annual basis due to population changes and we have not transitioned these changes under the SNF PPS.

As noted previously, our data analysis shows that a minimal number of SNFs would experience a decrease of more than 5 percent in the wage index. In addition, under the CBSA designation, an even smaller number of SNFs would experience a change from their current urban or rural designation. Therefore, the aggregate impact on SNFs under the MSA-based designations as compared to the CBSA-based designations does not result in a dramatic change overall.

As explained above, we believe that it is not appropriate or necessary to propose a transition to the proposed new CBSA-based labor market area for the SNF PPS wage index adjustment. In addition, as noted above, we believe the data suggest that the potential benefit of a hold harmless policy for an extremely small number of providers would be outweighed by the resulting decrease in payment rates for all providers. However, we specifically invite public comments on our proposed approach, as well as on the various transition options discussed above.

Finally, we note that section 505 of the MMA established new section 1886(d)(13) of the Act. The new section 1886(d)(13) requires that the Secretary establish a process to make adjustments to the hospital wage index based on commuting patterns of hospital employees. We believe that this requirement for an ''out-commuting'' or ''out-migration'' adjustment applies specifically to the Hospital Inpatient Prospective Payment System. Therefore, we will not be establishing such an adjustment for the SNF PPS.

6. Wage Index Data

[If you choose to comment on issues in this section, please include the caption *''Wage Index Data''* at the beginning of your comments.]

In the FY 2005 SNF PPS update notice (69 FR 45775, July 30, 2004), we established SNF PPS wage index values for the 2005 SNF PPS rate year calculated from the same data (generated in cost reporting periods beginning during FY 2001) used to compute the FY 2005 acute care hospital inpatient wage index data, without taking into account geographic reclassification under sections 1886(d)(8) and 1886(d)(10) of the Act and without applying the ''rural floor'' under section 4410 of the BBA. We subsequently published correction notices to update the wage index values. The SNF wage index values applicable for services furnished on or after October 1, 2004 through August 31, 2005 are shown in Table 8 (for urban areas) and Table 9 (for rural areas) in the December 30, 2004 correction notice (69 FR 78445).

Acute care hospital inpatient wage index data is also used to establish the wage index adjustment used in the LTCH PPS, IPF PPS, HHA PPS, and IRF PPS. As we discussed in the May 12, 1998 SNF PPS interim final rule (63 FR 26252), as hospitals that are excluded from the IPPS are not required to provide wage-related information on the Medicare cost report, and because we would need to establish instructions for the collection of these SNF data in order to establish a geographic reclassification adjustment under the SNF PPS, the wage adjustment established under the SNF PPS is based on a SNF's actual location without regard to the urban or rural designation of any related or affiliated provider.

In this proposed rule, for the FY 2006 SNF PPS rate year, we propose to use acute care hospital inpatient wage index data generated from cost reporting periods beginning during FY 2002 (without taking into account geographic reclassification under sections 1886(d)(8) and 1886(d)(10) of the Act and without applying the ''rural floor'' under section 4410 of the BBA) to determine the applicable wage index values under the SNF PPS, because these data (FY 2002) are the most recent complete data. We realize that there has been some interest in developing a SNF-specific wage index. However, considering the impact of converting to the new OMB classification methodology discussed above, we believe a second major change would be inappropriate at this time. In making this decision, one of our primary concerns is that the combined effect of changing both the wage area categories and the actual wage index could result in an inaccurate impact assessment for one or both of these changes. As discussed in several of the previous SNF PPS rules, we also remain concerned about the potential volatility and unreliability of unaudited data (see, for example, the final rule for FY 2002 (66 FR 39579 through 39596, July 31, 2001), and the final rule for FY 2004 (68 FR 46045 through 46046, August 3, 2003)).

We are proposing to adopt OMB's new labor market designations for CY 2006, effective January 1, 2006. In adopting the CBSA designations, we identified some geographic areas where there were no hospitals, and thus no hospital wage index data on which to base the calculation of the FY 2006 SNF PPS proposed wage index. In addressing this situation, we are proposing approaches that we believe serve as proxies for hospital wage data and would provide an appropriate standard that accounts for geographic variation in labor costs.

The first situation involves rural locations in Massachusetts and Puerto Rico. Under these labor market areas, there are no rural hospitals in those

locations. Because there is no reasonable proxy for more recent rural data within those areas, we are proposing to use last year's wage index value for rural Massachusetts and rural Puerto Rico.

The second situation has to do with the urban areas of Hinesville, GA (CBSA 25980) and Mansfield, OH (CBSA 31900). Again, under the proposed new labor market areas there are no urban hospitals within those areas. We propose to use all of the urban areas within the State to serve as a reasonable proxy for the urban areas without specific hospital wage index data in determining the SNF PPS wage index. Therefore, in this proposed rule, we calculated the urban wage index value for purposes of the wage index for these areas without urban hospital data as the average wage index for all urban areas within the State. We note that we could not apply a similar averaging in rural areas, because in the rural areas there are no State rural hospital wage data available for averaging on a State-wide basis. We solicit comments on these approaches to calculating the wage index values for areas without hospitals for FY 2006 and subsequent years.

The proposed wage index values that would be applicable for SNF PPS services furnished on or after October 1, 2005 through August 31, 2006 are shown in Tables 8 and 9 in the Addendum of this proposed rule.

E. Updates to the Federal Rates

In accordance with section 1888(e)(4)(E) of the Act and section 311 of the BIPA, the proposed payment rates listed here reflect a proposed update equal to the full SNF market basket, estimated at 3.0 percentage points. We will continue to disseminate the rates, wage index, and case-mix classification methodology through the **Federal Register** before August 1 preceding the start of each succeeding fiscal year. We discuss the Federal rate update factor in greater detail in section III.C of this preamble.

F. Relationship of RUG–III Classification System to Existing Skilled Nursing Facility Level-of-Care Criteria

As discussed in § 413.345, we include in each update of the Federal payment rates in the **Federal Register** the designation of those specific RUGs under the classification system that represent the required SNF level of care, as provided in § 409.30. This designation reflects an administrative presumption under the current 44-group RUG–III classification system. Our presumption is that any beneficiary who is correctly assigned to one of the upper 26 RUG–III groups in the initial 5-day, Medicare-required assessment is automatically classified as meeting the SNF level of care definition up to the assessment reference date for that assessment.

Any beneficiary assigned to any of the lower 18 groups is not automatically classified as either meeting or not meeting the definition, but instead receives an individual level of care determination using the existing administrative criteria. This presumption recognizes the strong likelihood that beneficiaries assigned to one of the upper 26 groups during the immediate post-hospital period require a covered level of care, which would be significantly less likely for those beneficiaries assigned to one of the lower 18 groups.

As discussed in section II.B of this preamble, we propose to refine the existing 44-group RUG–III classification system by adding an additional 9 groups, comprising a new Rehabilitation plus Extensive Services category. In effect, the groups in this new category would encompass care that is at least as intensive as that identified by any of the upper 26 RUG–III groups under the original, 44-group RUG–III classification system. Accordingly, for purposes of the administrative presumption, we propose to designate the upper 35 groups of the proposed 53-group refined case-mix classification system (including the upper 26 groups that we have identified as representing a covered level of care under the existing 44-group system, plus the additional 9 groups set forth in this proposed rule), consisting of the following RUG classifications: All groups within the proposed new Rehabilitation plus Extensive Services category; all groups within the Ultra High Rehabilitation category; all groups within the Very High Rehabilitation category; all groups within the High Rehabilitation category; all groups within the Medium Rehabilitation category; all groups within the Low Rehabilitation category; all groups within the Extensive Services category; all groups within the Special Care category; and, all groups within the Clinically Complex category.

G. Initial 3-Year Transition Period From Facility Specific to Federal Rates

As noted previously in section I.A and section I.F.2 of this proposed rule, the PPS is no longer operating under the initial 3-year transition period from facility-specific to Federal rates. Therefore, payment now equals the adjusted Federal per diem rate.

H. Example of Computation of Adjusted PPS Rates and SNF Payment

As explained in section II.B of this proposed rule, from October 1, 2005, through December 31, 2005, we propose to make payment based entirely on the existing 44-group RUG–III classification system (including any associated add-on payments). Using the model SNF (XYZ) described in Table 10, the following shows the adjustments made to the Federal per diem rate to compute the provider's actual per diem PPS for the time period mentioned above using the existing 44 group RUG-III classification system.

TABLE 10.—RUG–44, SNF XYZ: LOCATED IN STATE COLLEGE, PA, WAGE INDEX: 0.8364

RUG group	Labor	Wage index	Adjustment labor	Non-labor	Adjustment rate	Percent adjustment	Medicare days	Payment
RVC	$282.62	0.8364	$236.38	$88.82	$325.20	* $346.99	14	$4,858
RHA	218.40	0.8364	182.67	68.64	251.31	* 268.15	16	4,290
CC2	180.87	0.8364	151.28	56.84	208.12	** 474.51	10	4,745
SE3	241.52	0.8364	202.01	75.91	277.92	*** 333.50	30	10,005
IA2	123.35	0.8364	103.17	38.77	141.94	141.94	30	4,258
Total							100	28,156

* Reflects a 6.7 percent adjustment from section 314 of the BIPA.

** Reflects a 128 percent adjustment from section 511 of the MMA. Section 101(a) of the BBRA no longer applies because of the MMA section 511 adjustment.

*** Reflects a 20 percent adjustment from section 101(a) of the BBRA.

Beginning January 1, 2006, we propose to make payment based on the proposed new RUG–53 classification system (and, thus, would not include the add-on payments). Table 10a shows an example of the actual per diem PPS payments under the RUG–53 classification system.

TABLE 10A.—RUG–53, SNF XYZ: LOCATED IN STATE COLLEGE, PA, WAGE INDEX: 0.8364

RUG group	Labor	Wage index	Adjustment labor	Non-labor	Adjustment rate	Percent adjustment	Medicare days	Payment
RVX	$310.03	0.8364	$259.31	$97.44	$356.75	$356.75	14	$4,994
RHA	233.09	0.8364	194.96	73.26	268.22	268.22	16	4,291
CC2	184.01	0.8364	153.91	57.83	211.74	*482.76	10	4,828
RLX	246.32	0.8364	206.02	77.42	283.44	283.44	30	8,503
IA2	125.44	0.8364	104.92	39.43	144.35	144.35	30	4,330
Total							100	26,946

*Reflects a 128 percent adjustment from section 511 of the MMA.

III. The Skilled Nursing Facility Market Basket Index

Section 1888(e)(5)(A) of the Act requires us to establish a SNF market basket index (input price index) that reflects changes over time in the prices of an appropriate mix of goods and services included in the SNF PPS. This proposed rule incorporates the latest available projections of the SNF market basket index. The final rule will incorporate updated projections based on the latest available projections at that time. Accordingly, we have developed a SNF market basket index that encompasses the most commonly used cost categories for SNF routine services, ancillary services, and capital-related expenses. In the July 31, 2001 **Federal Register** (66 FR 39562), we included a complete discussion on the rebasing of the SNF market basket to FY 1997. There are 21 separate cost categories and respective price proxies. These cost categories were illustrated in Table 10.A, Table 10.B, and Appendix A, along with other relevant information, in the July 31, 2001 **Federal Register**.

Each year, we calculate a revised labor-related share based on the relative importance of labor-related cost categories in the input price index. Table 11 summarizes the proposed updated labor-related share for FY 2006.

TABLE 11.—FY 2006 LABOR-RELATED SHARE

	Relative importance, labor-related, FY 2005 (97 index)	Relative importance, labor-related, FY 2006 (97 index)
Wages and salaries	54.720	54.572
Employee benefits	11.595	11.691
Nonmedical professional fees	2.688	2.702
Labor-intensive services	4.125	4.116
Capital-related	3.094	3.006
Total	76.222	76.087

A. Use of the Skilled Nursing Facility Market Basket Percentage

Section 1888(e)(5)(B) of the Act defines the SNF market basket percentage as the percentage change in the SNF market basket index, as described in the previous section, from the average index level of the prior fiscal year to the average index level of the current fiscal year. For the Federal rates established in this proposed rule, this percentage increase in the SNF market basket index would be used to compute the update factor occurring between FY 2005 and FY 2006. We used the Global Insight, Inc. (formerly DRI-WEFA), 1st quarter 2005 forecasted percentage increase in the FY 1997-based SNF market basket index for routine, ancillary, and capital-related expenses, described in the previous section, to compute the update factor. Finally, we no longer compute update factors to adjust a facility-specific portion of the SNF PPS rates, because the 3-year transition period from facility-specific to full Federal rates that started with cost reporting periods beginning in July 1998 has expired.

B. Market Basket Forecast Error Adjustment

As discussed in the June 10, 2003, supplemental proposed rule (68 FR 34768) and finalized in the August 4, 2003, final rule (68 FR 46067), the regulations at § 413.337(d)(2) provide for an adjustment to account for market basket forecast error. The initial adjustment applied to the update of the FY 2003 rate that occurred in FY 2004, and took into account the cumulative forecast error for the period from FY 2000 through FY 2002. Subsequent adjustments in succeeding FYs take into account the forecast error from the most recently available fiscal year for which there are final data, and are applied whenever the difference between the forecasted and actual change in the market basket exceeds a 0.25 percentage point threshold. As discussed previously in section I.G of this proposed rule, as the difference between the estimated and actual amounts of increase in the market basket index for FY 2004 (the most recently available fiscal year for which there are final data) did not exceed the 0.25 percentage point threshold, the payment rates for FY 2006 do not include a forecast error adjustment.

C. Federal Rate Update Factor

Section 1888(e)(4)(E)(ii)(IV) of the Act requires that the update factor used to establish the FY 2006 Federal rates be at a level equal to the full market basket percentage change. Accordingly, to establish the update factor, we determined the total growth from the average market basket level for the period of October 1, 2004 through September 30, 2005 to the average market basket level for the period of October 1, 2005 through September 30, 2006. Using this process, the proposed update factor for FY 2006 SNF Federal rates is 3.0 percentage points. We used this revised proposed update factor to compute the proposed Federal portion of the SNF PPS rate shown in Tables 2 and 3.

IV. Consolidated Billing

As established by section 4432(b) of the BBA, the consolidated billing requirement places with the SNF the

Medicare billing responsibility for virtually all of the services that the SNF's residents receive, except for a small number of services that the statute specifically identifies as being excluded from this provision. Section 103 of the BBRA amended this provision by further excluding a number of high-cost, low probability services (identified by Healthcare Common Procedure Coding System (HCPCS) codes) within several broader categories that otherwise remained subject to the provision. Section 313 of the BIPA further amended this provision by repealing its Part B aspect; that is, its applicability to services furnished to a resident during a SNF stay that Medicare does not cover. (However, physical, occupational, and speech-language therapy remain subject to consolidated billing, regardless of whether the resident who receives these services is in a covered Part A stay.)

Further, while the services of rural health clinics (RHCs) and Federally Qualified Health Centers (FQHCs) generally are subject to SNF consolidated billing, section 410 of the MMA provided that when an RHC or FQHC furnishes the services of a physician (or another type of service that section 1888(e)(2)(A)(ii) of the Act identifies as being excluded from SNF consolidated billing), those services do not become subject to consolidated billing merely by virtue of being furnished under the auspices of the RHC or FQHC. In effect, this provision (which applies to services furnished on or after January 1, 2005) enables those services to retain their separate identity as excluded ''practitioner'' services in this context, rather than being treated as bundled ''RHC'' or ''FQHC'' services. As such, these services would remain separately billable to Part B when furnished to a resident of the SNF during a covered Part A stay.

To date, the Congress has enacted no further legislation affecting the consolidated billing provision. However, as we noted in the proposed rule of April 10, 2000 (65 FR 19232), section 1888(e)(2)(A)(iii) of the Act, as added by section 103 of the BBRA, not only identified for exclusion from this provision a number of particular service codes within four specified categories (that is, chemotherapy items, chemotherapy administration services, radioisotope services, and customized prosthetic devices), but ''* * * also gives the Secretary the authority to designate additional, individual services for exclusion within each of the specified service categories.'' In that proposed rule, we also noted that the BBRA Conference report (H.R. Conf. Rep. No. 106–479 at 854) characterizes the individual services that this legislation targets for exclusion as ''* * * high-cost, low probability events that could have devastating financial impacts because their costs far exceed the payment [SNFs] receive under the prospective payment system * * *'' According to the conferees, section 103(a) ''is an attempt to exclude from the PPS certain services and costly items that are provided infrequently in SNFs * * *.'' By contrast, we noted that the Congress declined to designate for exclusion any of the remaining services within those four categories (thus leaving all of those services subject to SNF consolidated billing), because they are relatively inexpensive and are furnished routinely in SNFs.

As we further explained in the final rule of July 31, 2000 (65 FR 46790), any additional service codes that we might designate for exclusion under our discretionary authority must meet the same criteria that the Congress used in identifying the original codes excluded from consolidated billing under section 103(a) of the BBRA: They must fall within one of the four service categories specified in the BBRA, and they also must meet the same standards of high cost and low probability in the SNF setting. Accordingly, we characterized this statutory authority to identify additional service codes for exclusion ''* * * as essentially affording the flexibility to revise the list of excluded codes in response to changes of major significance that may occur over time (for example, the development of new medical technologies or other advances in the state of medical practice)'' (65 FR 46791). In view of the amount of time that has elapsed since we last invited comments on this issue, we believe it is appropriate at this point once again to invite public comments that identify codes in any of these four service categories representing recent medical advances that might meet the BBRA criteria for exclusion from SNF consolidated billing.

We note that the original BBRA legislation (as well as the implementing regulations) identified a set of excluded services by means of specifying HCPCS codes that were in effect as of a particular date (for example July 1, 1999). Identifying the excluded services in this manner made it possible for us to utilize a Program Memorandum as the vehicle for accomplishing routine updates of the excluded codes, in order to reflect any minor revisions that might subsequently occur in the coding system itself (for example, the assignment of a different code number to the same service). Accordingly, for any new services that would actually represent a substantive change in the scope of services that are excluded from the SNF consolidated billing provision, we would identify these additional excluded services by means of the HCPCS codes that are in effect as of a specific date (in this case, October 1, 2005). By making any new exclusions in this manner, we could similarly accomplish routine future updates of these additional codes through the issuance of program instructions.

V. Application of the SNF PPS to SNF Services Furnished by Swing-Bed Hospitals

In accordance with section 1888(e)(7) of the Act (as amended by section 203 of the BIPA), Part A pays critical access hospitals (CAHs) on a reasonable cost basis for SNF services furnished under a swing-bed agreement. However, as noted previously in section I.A of this notice, the services furnished by non-CAH rural hospitals are paid under the SNF PPS. In the July 31, 2001 final rule (66 FR 39562), we announced the conversion of swing-bed rural hospitals to the SNF PPS, effective with the start of the provider's first cost reporting period beginning on or after July 1, 2002. We selected this date consistent with the statutory provision to integrate swing-bed rural hospitals into the SNF PPS by the end of the SNF transition period, June 30, 2002.

As of June 30, 2003, all swing-bed rural hospitals have come under the SNF PPS. Therefore, all rates and wage indexes outlined in earlier sections of this notice for SNF PPS also apply to all swing-bed rural hospitals. A complete discussion of assessment schedules, the MDS, and the transmission software (Raven-SB for Swing Beds) can be found in the July 31, 2001 final rule (66 FR 39562). The latest changes in the MDS for swing-bed rural hospitals are listed on our SNF PPS Web site, *http://www.cms.hhs.gov/providers/snfpps/default.asp.*

VI. Qualifying Three-Day Inpatient Hospital Stay Requirement

As indicated in section I.A of this proposed rule, the SNF benefit includes not only level of care requirements, but also a set of technical, or ''posthospital'' eligibility requirements as well. These requirements date back to the original Medicare legislation (section 102(a) of the Social Security Amendments of 1965, Public Law 89–97), when the Congress defined the intended scope of this benefit. The SNF benefit was never intended to cover long-term, relatively low-level ''custodial'' care; rather, the Congress envisioned this benefit more

narrowly, in terms of serving as a less expensive alternative to what would otherwise be the final, convalescent portion of an acute care stay of several days as an inpatient at a hospital. In order to target the SNF benefit more effectively at the limited segment of the nursing home population that the benefit was actually designed to cover (that is, those beneficiaries requiring a short-term, fairly intensive stay in a SNF as a continuation of an acute hospital stay of several days), the Congress established as a prerequisite for SNF coverage a requirement that a beneficiary must first be a hospital inpatient for ''not less than 3 consecutive days before his discharge from the hospital'' (section 1861(i) of the Act). From the very inception of the Medicare program, in determining the three-day inpatient requirement for purposes of triggering the SNF benefit, ''inpatient'' status has been determined as commencing with ''the calendar day of admission'' to the hospital (see 20 CFR § 405.120 (1966)). The current guidelines in the CMS Internet Online Manual (IOM) at Publication 100–02 (Medicare Benefit Policy Manual), Chapter 8 (Coverage of Extended Care (SNF) Services Under Hospital Insurance), § 20.1 (Three-Day Prior Hospitalization) reflect this determination.

More recently, it has been suggested that because of changes in hospital admission practices that have occurred since the Congress enacted this provision in 1965, some patients who at that time would have been a hospital inpatient for at least 3 days are instead now placed in observation status initially, before being formally admitted as a hospital inpatient. Observation status is a distinct service that is discussed in the IOM in Publication 100–02 (Medicare Benefit Policy Manual), Chapter 6 (Hospital Services Covered Under Part B), § 70.4 (Outpatient Observation Services), in which a patient who needs more care than can be provided in an emergency room is moved from the emergency room, placed in a hospital bed in the appropriate hospital unit, and monitored by the unit nursing and physician staff. We recognize that coverage of observation services under the outpatient prospective payment system is connected to patients with three specific diagnoses: chest pain, asthma, and congestive heart failure.

However, as we noted previously, the longstanding policy interpretation of the SNF benefit's prior hospital stay requirement does not count hospital observation time that immediately precedes an inpatient admission toward meeting the requirement. We have received occasional inquiries about the effect of this policy on those beneficiaries who would be able to satisfy the SNF benefit's 3-day hospital stay requirement only if time spent in observation status immediately prior to the formal inpatient admission were counted. These inquiries assert that in such situations, the care furnished during observation may be indistinguishable from the inpatient care that follows the formal admission, so that the beneficiaries themselves often learn of the difference only after they were transferred to the SNF and failed to meet the SNF benefit's prior hospital stay requirement. The inquirers argue that it is unfair to deny SNF coverage to such a beneficiary based solely on what they characterize as a mere recordkeeping convention on the part of the hospital rather than a substantive change in the actual care that the beneficiary receives there.

We note that the current SNF benefit policy (which counts only time following the formal inpatient admission to the hospital toward meeting the qualifying hospital stay requirement) is based directly on the applicable portion of the Medicare law at section 1861(i) of the Act, which defines the SNF benefit's qualifying hospital stay as one in which the beneficiary ''* * * was an *inpatient* for not less than 3 consecutive days * * *'' (emphasis added). An inpatient is a person who has been admitted to a hospital for bed occupancy for purposes of receiving inpatient hospital services as defined in section 1861 of the Act. Moreover, although at the time that this provision was enacted, the concept of observation status itself was not yet even envisioned, to date, the Congress has not chosen to amend section 1861(i) of the Act specifically to reflect use of observation time as triggering the SNF benefit. However, we are aware that over time, practice and treatment of observation time may have changed; thus, the effect of not counting this observation time under the existing policy ultimately might be to restrict SNF coverage to a narrower segment of the beneficiary population than the Congress originally intended.

Accordingly, with regard to those beneficiaries whose formal admission to the hospital as an inpatient is immediately preceded by time spent in hospital observation status, we invite comments on whether we should consider the possibility of counting the time spent in observation status toward meeting the SNF benefit's qualifying 3-day hospital stay requirement. We note that in evaluating the potential impact of such a change, it is necessary not only to consider its effect on those beneficiaries who might not otherwise be able to meet the SNF benefit's prior qualifying hospital stay requirement, but also to assess potential negative consequences. Possible examples could include altering the nature of the SNF benefit in a manner that is inconsistent with Congressional intent in establishing this requirement, or creating a ''woodwork effect'' of unanticipated consequences, such as routine placement of patients in observation status prior to formal admission, even in situations where observation is not appropriate.

In soliciting these comments, moreover, we wish to distinguish the possible use of observation time from time spent in the hospital's emergency room. Although both observation services and emergency room services are directed at patients who are expected to spend only a short period of time in that service area, they are in many other ways dissimilar. Other than for patients with scheduled admissions, the emergency room generally serves as the hospital's overall point of entry, irrespective of the degree of severity of a particular patient's condition; thus, many hospital patients typically would commence their hospital encounter by spending at least some time initially in the emergency room. However, the time in the emergency room is not considered a substitute for or equivalent to inpatient hospital care. Clearly, many visits to the ER are for treatment of problems requiring no inpatient hospitalization (for example, most wounds, broken or sprained limbs, or minor respiratory illnesses) and often patients come to the ER because their regular physician is unavailable. Situations involving observation status, however, tend to be relatively infrequent compared to the care of all patients that present to the hospital (for example, excessive bleeding or complications during surgery necessitating a longer-than-normal recovery period, or non-specific significant abdominal pain). Further, as emergency room services typically represent the patient's initial medical encounter for new or worsening symptoms, such services focus on identifying, managing, and stabilizing the patient's acute condition. By contrast, observation services are furnished to a patient for whom there is already at least a working diagnosis, and involve ongoing assessment and short-term treatment that is specifically directed at that condition so that a subsequent determination about

hospital admission or discharge can be made. (With respect to continuing assessment and treatment, observation services would appear to share some common elements with inpatient care, although the latter involves a condition that is expected to require care for a significantly longer duration, and that also may well require medical intervention at a level of complexity that does not occur on an outpatient basis.)

We recognize that, under section 1886(a) of the Act, the statute defines ''operating costs of inpatient hospital services'' as including the costs of certain services furnished prior to a patient's admission to the hospital. That is, the costs of certain services furnished prior to an individual's admission as an inpatient are deemed by statute to be operating costs of inpatient hospital services. However, it is worth noting that section 1886(a) addresses costs, and neither section 1886(a) nor section 1861(i) provides that a patient be deemed an inpatient during the time prior to admission for purposes of the 3-day requirement for SNF coverage. Moreover, the deeming requirement in section 1886(a) and the 3-day requirement for SNF coverage in section 1861(i) serve different purposes. The deeming requirement in section 1886(a) was intended to prevent hospitals from ''unbundling'' services from the inpatient stay and inappropriately seeking separate payment. *See* 59 FR 1654, 1656 (Jan. 12, 1994). That consideration does not apply in the context of SNF coverage. As discussed above, the purpose of the 3-day inpatient stay requirement for SNF coverage is to target SNF coverage to individuals requiring a short-term, fairly intensive stay in a SNF as a continuation of an acute hospital stay. The Congress chose to target SNF coverage to individuals who had been inpatients for at least 3 consecutive days; the Congress could have chosen a shorter time, or it could have specified that certain time before admission must be counted for purposes of the 3-day requirement, but it did not. Given the differences in statutory language and statutory purpose, we believe the requirement in section 1886(a) of the Act (to treat certain preadmission costs as inpatient costs) is consistent with not counting time spent in the hospital prior to an individual's inpatient admission as inpatient time, for purposes of the 3-day requirement for SNF coverage under section 1861(i) of the Act.

VII. Provisions of the Proposed Rule

In this proposed rule, we propose to make the following revision to the existing text of the regulations:

- We would revise the regulations at § 424.20(e)(2), regarding the performance of SNF certifications and recertifications by NPs and CNSs, to clarify the distinction between ''direct'' and ''indirect'' employment relationships. We would also make a minor technical correction in the definition of ''HCPCS'' that appears in § 424.3.

VIII. Collection of Information Requirements

This document does not impose information collection and recordkeeping requirements. Consequently, it need not be reviewed by the Office of Management and Budget under the authority of the Paperwork Reduction Act of 1995.

IX. Regulatory Impact Analysis

A. Overall Impact

We have examined the impacts of this proposed rule as required by Executive Order 12866 (September 1993, Regulatory Planning and Review), the Regulatory Flexibility Act (RFA, September 16, 1980, Pub. L. 96–354), section 1102(b) of the Social Security Act, the Unfunded Mandates Reform Act of 1995 (Pub. L. 104–4), and Executive Order 13132.

Executive Order 12866 (as amended by Executive Order 13258, which merely reassigns responsibility of duties) directs agencies to assess all costs and benefits of available regulatory alternatives and, if regulation is necessary, to select regulatory approaches that maximize net benefits (including potential economic, environmental, public health and safety effects, distributive impacts, and equity). A regulatory impact analysis (RIA) must be prepared for major rules with economically significant effects ($100 million or more in any 1 year). This proposed rule is major, as defined in Title 5, United States Code, section 804(2), because we estimate the impact to the Medicare program, and the annual effects to the overall economy, would be more than $100 million.

The RFA requires agencies to analyze options for regulatory relief of small businesses. For purposes of the RFA, small entities include small businesses, nonprofit organizations, and government agencies. Most SNFs and most other providers and suppliers are small entities, either by their nonprofit status or by having revenues of $11.5 million or less in any 1 year. For purposes of the RFA, approximately 53 percent of SNFs are considered small businesses according to the Small Business Administration's latest size standards, with total revenues of $11.5 million or less in any 1 year (for further information, see 65 FR 69432, November 17, 2000). Individuals and States are not included in the definition of a small entity. In addition, approximately 29 percent of SNFs are nonprofit organizations.

This proposed rule proposes to update the SNF PPS rates published in the FY 2005 update notice on July 30, 2004 (69 FR 45775) and the associated correction notices published on October 7, 2004 (69 FR 60158), and December 30, 2004 (69 FR 78445).

In addition, section 1102(b) of the Act requires us to prepare a regulatory impact analysis if a rule may have a significant impact on the operations of a substantial number of small rural hospitals. This analysis must conform to the provisions of section 603 of the RFA. For purposes of section 1102(b) of the Act, we define a small rural hospital as a hospital that is located outside of a Metropolitan Statistical Area and has fewer than 100 beds. We anticipate that the impact on swing-bed facilities will be similar to the impact on rural hospital-based facilities, which benefit from the case-mix refinement (see Table 12 below).

Section 202 of the Unfunded Mandates Reform Act of 1995 also requires that agencies assess anticipated costs and benefits before issuing any rule that may result in expenditure in any 1 year by State, local, or tribal governments, in the aggregate, or by the private sector, of $110 million or more. This proposed rule would not have a substantial effect on the governments mentioned, or on private sector costs.

Executive Order 13132 establishes certain requirements that an agency must meet when it promulgates a proposed rule that impose substantial direct requirement costs on State and local governments, preempts State law, or otherwise has Federalism implications. As stated above, this proposed rule would not have a substantial effect on State and local governments.

B. Anticipated Effects

This proposed rule sets forth updates of the SNF PPS rates contained in the FY 2005 update notice (69 FR 45775), and the associated correction notices (69 FR 60158 and 69 FR 78445) and presents a refinement to the RUG–III case-mix classification system to be incorporated into the Medicare SNF PPS effective January 1, 2006. As described

in Section II.B.4, providers would continue to be paid under the current 44 group RUG–III system from October 1, 2005 through December 31, 2005. Beginning January 1, 2006, we propose that providers would be paid the proposed new RUG–53 payment.

Based on the above, we estimate the FY 2006 impact to be a net impact of $0 million on payments (this reflects a $1.02 billion reduction from the expiration of temporary payment increases, offset by a $510 million increase from the proposed refined case-mix classification system and a $510 million increase from the update to the payment rates, as explained in greater detail later in this section). The impact analysis in Table 12 of this proposed rule represents the projected effects of the proposed policy changes in the SNF PPS from FY 2005 to FY 2006. We estimate the effects by estimating payments while holding all other payment variables constant. We use the best data available, but we do not attempt to predict behavioral responses to these changes, and we do not make adjustments for future changes in such variables as days or case-mix.

We note that certain events may combine to limit the scope or accuracy of our impact analysis, because such an analysis is future-oriented and, thus, susceptible to forecasting errors due to other changes in the forecasted impact time period. Some examples are newly-legislated general Medicare program funding changes by the Congress, or changes specifically related to SNFs. In addition, changes to the Medicare program may continue to be made as a result of the BBA, the BBRA, the BIPA, the MMA, or new statutory provisions. Although these changes may not be specific to the SNF PPS, the nature of the Medicare program is such that the changes may interact, and the complexity of the interaction of these changes could make it difficult to predict accurately the full scope of the impact upon SNFs.

In accordance with section 1888(e)(4)(E) of the Act, we are updating the payment rates for FY 2006. The BBRA, BIPA, and MMA provided for several temporary adjustments to the SNF PPS payment rates that together, using the most recent data available, accounted for an estimated $1.4 billion per year in payments to the nursing home industry.

We note that in accordance with section 101(a) of the BBRA and section 314 of the BIPA, the existing, temporary increase in the per diem adjusted payment rates of 20 percent for certain specified clinically complex RUGs (and 6.7 percent for other, rehabilitation RUGs) would expire with the implementation of the proposed case-mix refinements in the SNF PPS. As explained in section II.B.3 of this proposed rule, section 511 of the MMA, which provides for a 128 percent increase in the PPS per diem payment for any SNF resident with Acquired Immune Deficiency Syndrome (AIDS), remains in effect. However, we have not provided a separate impact analysis for the MMA provision. Our latest estimates indicate that there are less than 2,000 beneficiaries who qualify for this add-on payment. The impact to Medicare is included in the ''total'' column of Table 12.

In proposing to update the rates for FY 2006, we made a number of standard annual revisions and clarifications mentioned elsewhere in this proposed rule (for example, the update to the wage and market basket indexes used for adjusting the Federal rates). These revisions would increase payments to SNFs by approximately $510 million.

The aggregate change in payments associated with this proposed rule is estimated to be $0 million for FY 2006. The decrease of $1.02 billion due to the elimination of the temporary add-ons as of January 1, 2006, together with the additional payment due to the proposed refined case-mix classification system of $510 million and the market basket increase of $510 million, results in a net change in payments of $0 million. There are two areas of change that produce this impact on SNFs:

1. The implementation of a refined case-mix classification system under section 1888(e)(4)(G)(i) of the Act and, consequently, the reduction of the temporary 20 percent/6.7 percent add-ons to the Federal rates for the specified RUG groups.

2. The total change in payments from FY 2005 levels to FY 2006 levels. This includes all of the previously noted changes in addition to the effect of the update to the rates.

The impacts are shown in Table 12. The breakdown of the various categories of data in the table follows.

The first column shows the breakdown of all SNFs by urban or rural status, hospital-based or freestanding status, and census region.

The first row of figures in the first column describes the estimated effects of the various changes on all facilities. The next 6 rows show the effects on facilities split by hospital-based, freestanding, urban, and rural categories. The next 20 rows show the effects on urban versus rural status by census region.

The second column in the table shows the number of facilities in the impact database.

The third column of the table shows the effect of the annual update to the wage index. This represents the effect of using the most recent wage data available. The total impact of this change is zero percent; however, there are distributional effects of the change.

The fourth column of the table shows the effect of using the new OMB geographic designations based on CBSAs.

The fifth column of the table shows the effect of the elimination of the add-on for specified RUG groups. As expected, this results in a decrease in payments for all providers.

The sixth column of the table shows the effect of the proposed refinements to the case-mix classification system. Table 12 shows that there is a positive three percent overall impact from the proposed case-mix refinements. Distributional effects are noted for specific providers. For example, hospital-based facilities are expected to receive greater than a 5.6 percent increase in payment, compared with freestanding facilities that show an increase in payments of between 2.4 and 2.9 percent. Additionally, rural Census regions show increases in payments of 3.4 percent.

The seventh column of the table shows the effect of all of the changes on the FY 2006 payments. As the market basket increase of 3.0 percentage points is constant for all providers, it is not shown individually; however, we note that the ''Total FY 2006 change'' column does incorporate this increase. It is projected that aggregate payments would not change in total, assuming facilities do not change their care delivery and billing practices in response.

As can be seen from this table, the combined effects of all of the changes would vary by specific types of providers and by location. For example, though facilities in the rural South Atlantic and rural Mountain region experience payment decreases of 2.3 and 1.8 percent respectively, some providers such as the rural Pacific and rural New England show increases of 4.1 and 2.6 percent respectively. Payment increases for facilities in the Rural Pacific area of the country are the highest for any provider type.

TABLE 12.—PROJECTED IMPACT TO THE SNF PPS FOR FY 2006

	Number of facilities	Update wage data (percent)	MSA to CBSA (percent)	Eliminate add-on to certain RUGs (percent)	Case-mix refinements (percent)	Total FY 2006 change (percent)
Total	15,675	0.0	0.0	−6.0	3.0	0.0
Urban	10,599	0.0	0.2	−6.0	2.9	0.1
Rural	5,076	0.1	−0.8	−6.0	3.4	−0.3
Hospital based urban	1,097	0.0	0.2	−6.3	5.6	2.5
Freestanding urban	8,693	0.0	0.2	−5.9	2.4	−0.3
Hospital based rural	1,160	0.0	−0.7	−6.8	5.9	1.3
Freestanding rural	3,372	0.2	−1.0	−5.9	2.9	−0.8
Urban by region:						
New England	917	−0.4	−0.4	−6.4	3.0	−1.2
Middle Atlantic	1,499	0.2	0.3	−6.1	3.4	0.8
South Atlantic	1,739	−0.3	0.3	−5.9	2.6	−0.3
East North Central	2,009	−0.3	0.0	−5.7	2.8	−0.2
East South Central	531	0.4	0.7	−6.0	2.7	0.8
West North Central	836	−0.4	0.4	−5.9	3.7	0.8
West South Central	1,093	−0.1	0.5	−5.8	2.7	0.3
Mountain	467	−0.2	0.5	−5.6	3.0	0.7
Pacific	1,501	1.2	0.0	−6.2	2.7	0.7
Rural by region:						
New England	139	1.9	−0.1	−5.7	3.5	2.6
Middle Atlantic	283	0.0	−0.8	−6.0	3.7	−0.1
South Atlantic	612	−0.3	−1.7	−6.2	2.9	−2.3
East North Central	947	0.2	−0.8	−5.9	3.5	0.1
East South Central	571	0.4	−0.6	−6.3	2.9	−0.6
West North Central	1,219	−0.4	−0.3	−6.2	4.0	0.1
West South Central	823	0.3	−0.8	−6.2	2.9	−0.7
Mountain	298	0.8	−3.4	−5.9	3.8	−1.8
Pacific	182	1.3	0.5	−4.2	3.5	4.1
Ownership:						
Government	693	0.1	0.3	−6.5	3.2	0.0
Proprietary	9,317	0.0	0.0	−5.9	2.9	0.0
Voluntary	3,493	−0.1	−0.1	−6.0	3.1	−0.1

C. Accounting Statement

As required by OMB Circular A–4 (available at *http://www.whitehouse.gov/omb/circulars/a004/a–4.pdf*), in Table 13 below, we have prepared an accounting statement showing the classification of the expenditures associated with the provisions of this proposed rule. This table provides our best estimate of the change in Medicare payments under the SNF PPS as a result of the proposals presented in this proposed rule based on the data for 15,675 SNFs in our database. All expenditures are classified as transfers to Medicare providers (that is, SNFs).

TABLE 13.—ACCOUNTING STATEMENT: CLASSIFICATION OF ESTIMATED EXPENDITURES, FROM THE 2005 SNF PPS RATE YEAR TO THE 2006 SNF PPS RATE YEAR (IN MILLIONS)

Category	Transfers
Annualized Monetized Transfers.	$0 million.
From Whom To Whom?	No Transfer.

D. Alternatives Considered

Section 1888(e) of the Act establishes the SNF PPS for the payment of Medicare SNF services for cost reporting periods beginning on or after July 1, 1998. This section of the statute prescribes a detailed formula for calculating payment rates under the SNF PPS, and does not provide for the use of any alternative methodology. It specifies that the base year cost data to be used for computing the RUG-III payment rates must be from FY 1995 (October 1, 1994, through September 30, 1995.) In accordance with the statute, we also incorporated a number of elements into the SNF PPS, such as case-mix classification methodology, the MDS assessment schedule, a market basket index, a wage index, and the urban and rural distinction used in the development or adjustment of the Federal rates. Further, section 1888(e)(4)(H) of the Act specifically requires us to disseminate the payment rates for each new fiscal year through the **Federal Register**, and to do so before the August 1 that precedes the start of the new fiscal year.

As discussed previously in section II.B of this proposed rule, we propose to implement refinements to the RUG-III case-mix classification system under section 1888(e)(4)(G)(i) of the Act. At the same time, we continue to evaluate longer-range, more comprehensive changes in the case-mix classification system. One alternative that we considered was to defer proposing refinements at this time until our evaluation of longer-range, more comprehensive changes is complete. However, we believe that the refinements that we are proposing would serve to improve the distribution of payments under the PPS, in a manner that more accurately accounts for the care needs of the most medically complex patients. As noted in section II of this preamble, a number of analyses have demonstrated an increase in the explanatory power (R-square) of the proposed refined case-mix classification system model, compared to the 44-group model that is currently in use. While our additional research may identify more comprehensive modifications, it is not currently known when the results of this research would become available. Therefore, we have decided to propose the refinements discussed elsewhere in this proposed

rule. In addition, as noted previously, we specifically solicit comments on the economic impact of the payment changes discussed in this proposed rule, as well as their potential impact on beneficiaries' access to quality SNF care.

We considered other options intended to help ensure more accurate allocation of payments specifically with regard to non-therapy ancillaries. One of these options included moving the non-therapy ancillary costs used in establishing the nursing case-mix component of the payment rates to a separate, newly created ''medically ancillary'' component (65 FR 19192, April 10, 2000). In addition, we looked at a number of possible models, both weighted and unweighted, for a new non-therapy ancillary index (65 FR 19248ff.). Finally, we also researched the application of models such as Diagnosis-Related Groups (DRGs) and All Patient Refined DRGs (APR–DRGs). However, at this stage in our analysis, none of these alternatives offered a significant improvement over the RUG–53 model in accounting for the variability of non-therapy ancillary costs.

In accordance with the provisions of Executive Order 12866, this regulation was reviewed by the Office of Management and Budget.

List of Subjects in 42 CFR Part 424

Emergency medical services, Health facilities, Health professions, Medicare.

For the reasons set forth in the preamble, the Centers for Medicare & Medicaid Services proposes to amend 42 CFR chapter IV as follows:

PART 424—CONDITIONS FOR MEDICARE PAYMENT

1. The authority citation for part 424 continues to read as follows:

Authority: Secs. 1102 and 1871 of the Social Security Act (42 U.S.C. 1302 and 1395hh).

Subpart A—General Provisions

§ 424.3 [Amended]

2. In § 424.3, in the definition of ''HCPCS'' remove the word ''CMS'' and add the word ''Healthcare'' in its place.

Subpart B—Certification and Plan of Treatment Requirements

3. In § 424.20, paragraph (e)(2) is revised to read as follows:

§ 424.20 Requirements for posthospital SNF care.

* * * * *

(e) * * *

(2) A nurse practitioner or clinical nurse specialist, neither of whom has a direct or indirect employment relationship with the facility but who is working in collaboration with a physician. For purposes of this section—

(i) *Collaboration* means a process whereby a nurse practitioner or clinical nurse specialist works with a doctor of medicine or osteopathy to deliver health care services. The services are delivered within the scope of the nurse's professional expertise, with medical direction and appropriate supervision as provided for in guidelines jointly developed by the nurse and the physician or other mechanisms defined by Federal regulations and the law of the State in which the services are performed.

(ii) A *direct employment relationship* with the facility is one meeting the common law test specified in 20 CFR 404.1005, 404.1007, and 404.1009. When this test is not met, the facility is considered to have an *indirect employment relationship* with any nurse practitioner or clinical nurse specialist who performs nursing services for the facility under § 409.21 of this subchapter (however, the performance of only delegated physician tasks under § 483.40(e) of this chapter does not, in itself, establish the existence of an indirect employment relationship).

* * * * *

(Catalog of Federal Domestic Assistance Program No. 93.773, Medicare-Hospital Insurance Program; and No. 93.774, Medicare-Supplementary Medical Insurance Program)

Dated: March 31, 2005.

Mark B. McClellan,

Administrator, Centers for Medicare & Medicaid Services.

Dated: May 13, 2005.

Michael O. Leavitt,

Secretary.

VI. Addendum

This section contains the tables referred to throughout the preamble to this proposed rule. Tables 8 ''Proposed Wage Index For Urban Areas Based On CBSA Labor Market Areas,'' Table 9 ''Proposed Wage Index Based On CBSA Labor Market Areas For Rural Areas'' and Table A ''MSA/CBSA Crosswalk'' are presented below.

TABLE 8.—PROPOSED WAGE INDEX FOR URBAN AREAS BASED ON CBSA LABOR MARKET AREAS

CBSA Code	Urban Area (Constituent Counties)	Wage Index
10180	Abilene, TX	0.7904

TABLE 8.—PROPOSED WAGE INDEX FOR URBAN AREAS BASED ON CBSA LABOR MARKET AREAS—Continued

CBSA Code	Urban Area (Constituent Counties)	Wage Index
	Callahan County, TX.	
	Jones County, TX.	
	Taylor County, TX.	
10380	Aguadilla-Isabela-San Sebastian, PR.	0.4743
	Aguada Municipio, PR.	
	Aguadilla Municipio, PR.	
	Añasco Municipio, PR.	
	Isabela Municipio, PR.	
	Lares Municipio, PR.	
	Moca Municipio, PR.	
	Rincón Municipio, PR.	
	San Sebastian Municipio, PR.	
10420	Akron, OH	0.8991
	Portage County, OH.	
	Summit County, OH.	
10500	Albany, GA	0.8636
	Baker County, GA.	
	Dougherty County, GA.	
	Lee County, GA.	
	Terrell County, GA.	
	Worth County, GA.	
10580	Albany-Schenectady-Troy, NY.	0.8545
	Albany County, NY.	
	Rensselaer County, NY.	
	Saratoga County, NY.	
	Schenectady County, NY.	
	Schoharie County, NY.	
10740	Albuquerque, NM	0.9693
	Bernalillo County, NM.	
	Sandoval County, NM.	
	Torrance County, NM.	
	Valencia County, NM.	
10780	Alexandria, LA	0.8041
	Grant Parish, LA.	
	Rapides Parish, LA.	
10900	Allentown-Bethlehem-Easton, PA-NJ.	0.9828
	Warren County, NJ.	
	Carbon County, PA.	
	Lehigh County, PA.	
	Northampton County, PA.	
11020	Altoona, PA	0.8953
	Blair County, PA.	
11100	Amarillo, TX	0.9166
	Armstrong County, TX.	

TABLE 8.—PROPOSED WAGE INDEX FOR URBAN AREAS BASED ON CBSA LABOR MARKET AREAS—Continued

CBSA Code	Urban Area (Constituent Counties)	Wage Index
	Carson County, TX.	
	Potter County, TX.	
	Randall County, TX.	
11180	Ames, IA	0.9545
	Story County, IA.	
11260	Anchorage, AK	1.2110
	Anchorage Municipality, AK.	
	Matanuska-Susitna Borough, AK.	
11300	Anderson, IN	0.8595
	Madison County, IN.	
11340	Anderson, SC	0.8897
	Anderson County, SC.	
11460	Ann Arbor, MI	1.0870
	Washtenaw County, MI.	
11500	Anniston-Oxford, AL	0.7659
	Calhoun County, AL.	
11540	Appleton, WI	0.9298
	Calumet County, WI.	
	Outagamie County, WI.	
11700	Asheville, NC	0.9294
	Buncombe County, NC.	
	Haywood County, NC.	
	Henderson County, NC.	
	Madison County, NC.	
12020	Athens-Clarke County, GA.	0.9843
	Clarke County, GA.	
	Madison County, GA.	
	Oconee County, GA.	
	Oglethorpe County, GA.	
12060	Atlanta-Sandy Springs-Marietta, GA.	0.9648
	Barrow County, GA.	
	Bartow County, GA.	
	Butts County, GA.	
	Carroll County, GA.	
	Cherokee County, GA.	
	Clayton County, GA.	
	Cobb County, GA.	
	Coweta County, GA.	
	Dawson County, GA.	
	DeKalb County, GA.	
	Douglas County, GA.	
	Fayette County, GA.	
	Forsyth County, GA.	
	Fulton County, GA.	
	Gwinnett County, GA.	
	Haralson County, GA.	
	Heard County, GA.	
	Henry County, GA.	
	Jasper County, GA.	
	Lamar County, GA.	
	Meriwether County, GA.	
	Newton County, GA.	
	Paulding County, GA.	
	Pickens County, GA.	
	Pike County, GA.	
	Rockdale County, GA.	
	Spalding County, GA.	
	Walton County, GA.	
12100	Atlantic City, NJ	1.1633
	Atlantic County, NJ.	
12220	Auburn-Opelika, AL	0.8108
	Lee County, AL.	
12260	Augusta-Richmond County, GA-SC.	0.9565
	Burke County, GA.	
	Columbia County, GA.	
	McDuffie County, GA.	
	Richmond County, GA.	
	Aiken County, SC.	
	Edgefield County, SC.	
12420	Austin-Round Rock, TX.	0.9450
	Bastrop County, TX.	
	Caldwell County, TX.	
	Hays County, TX.	
	Travis County, TX.	
	Williamson County, TX.	
12540	Bakersfield, CA	1.0344
	Kern County, CA.	
12580	Baltimore-Towson, MD.	0.9907
	Anne Arundel County, MD.	
	Baltimore County, MD.	
	Carroll County, MD.	
	Harford County, MD.	
	Howard County, MD.	
	Queen Anne's County, MD.	
	Baltimore City, MD.	
12620	Bangor, ME	1.0003
	Penobscot County, ME.	
12700	Barnstable Town, MA.	1.2527
	Barnstable County, MA.	
12940	Baton Rouge, LA	0.8601
	Ascension Parish, LA.	
	East Baton Rouge Parish, LA.	
	East Feliciana Parish, LA.	
	Iberville Parish, LA.	
	Livingston Parish, LA.	
	Pointe Coupee Parish, LA.	
	St. Helena Parish, LA.	
	West Baton Rouge Parish, LA.	
	West Feliciana Parish, LA.	
12980	Battle Creek, MI	0.9510
	Calhoun County, MI.	
13020	Bay City, MI	0.9352
	Bay County, MI.	
13140	Beaumont-Port Arthur, TX.	0.8421
	Hardin County, TX.	
	Jefferson County, TX.	
	Orange County, TX.	
13380	Bellingham, WA	1.1743
	Whatcom County, WA.	
13460	Bend, OR	1.0796
	Deschutes County, OR.	
13644	Bethesda-Frederick-Gaithersburg, MD.	1.1495
	Frederick County, MD.	
	Montgomery County, MD.	
13740	Billings, MT	0.8843
	Carbon County, MT.	
	Yellowstone County, MT.	
13780	Binghamton, NY	0.8571
	Broome County, NY.	
	Tioga County, NY.	
13820	Birmingham-Hoover, AL.	0.8979
	Bibb County, AL.	
	Blount County, AL.	
	Chilton County, AL.	
	Jefferson County, AL.	
	St. Clair County, AL.	
	Shelby County, AL.	
	Walker County, AL.	
13900	Bismarck, ND	0.7519
	Burleigh County, ND.	
	Morton County, ND.	
13980	Blacksburg-Christiansburg-Radford, VA.	0.7962
	Giles County, VA.	
	Montgomery County, VA.	
	Pulaski County, VA.	
	Radford City, VA.	
14020	Bloomington, IN	0.8456
	Greene County, IN.	
	Monroe County, IN.	
	Owen County, IN.	
14060	Bloomington-Normal, IL.	0.9084
	McLean County, IL.	
14260	Boise City-Nampa, ID.	0.9061

TABLE 8.—PROPOSED WAGE INDEX FOR URBAN AREAS BASED ON CBSA LABOR MARKET AREAS—Continued

CBSA Code	Urban Area (Constituent Counties)	Wage Index
	Ada County, ID.	
	Boise County, ID.	
	Canyon County, ID.	
	Gem County, ID.	
	Owyhee County, ID.	
14484	Boston-Quincy, MA	1.1543
	Norfolk County, MA.	
	Plymouth County, MA.	
	Suffolk County, MA.	
14500	Boulder, CO	0.9744
	Boulder County, CO.	
14540	Bowling Green, KY	0.8220
	Edmonson County, KY.	
	Warren County, KY.	
14740	Bremerton-Silverdale, WA.	1.0686
	Kitsap County, WA.	
14860	Bridgeport-Stamford-Norwalk, CT.	1.2598
	Fairfield County, CT.	
15180	Brownsville-Harlingen, TX.	0.9822
	Cameron County, TX.	
15260	Brunswick, GA	0.9320
	Brantley County, GA.	
	Glynn County, GA.	
	McIntosh County, GA.	
15380	Buffalo-Niagara Falls, NY.	0.8889
	Erie County, NY.	
	Niagara County, NY.	
15500	Burlington, NC	0.8914
	Alamance County, NC.	
15540	Burlington-South Burlington, VT.	0.9446
	Chittenden County, VT.	
	Franklin County, VT.	
	Grand Isle County, VT.	
15764	Cambridge-Newton-Framingham, MA.	1.1084
	Middlesex County, MA.	
15804	Camden, NJ	1.0528
	Burlington County, NJ.	
	Camden County, NJ.	
	Gloucester County, NJ.	
15940	Canton-Massillon, OH.	0.8944
	Carroll County, OH.	
	Stark County, OH.	
15980	Cape Coral-Fort Myers, FL.	0.9366
	Lee County, FL.	
16180	Carson City, NV	1.0244
16220	Casper, WY	0.9035
	Natrona County, WY.	
16300	Cedar Rapids, IA	0.8617
	Benton County, IA.	
	Jones County, IA.	
	Linn County, IA.	
16580	Champaign-Urbana, IL.	0.9604
	Champaign County, IL.	
	Ford County, IL.	
	Piatt County, IL.	
16620	Charleston, WV	0.8428
	Boone County, WV.	
	Clay County, WV.	
	Kanawha County, WV.	
	Lincoln County, WV.	
	Putnam County, WV.	
16700	Charleston-North Charleston, SC.	0.9438
	Berkeley County, SC.	
	Charleston County, SC.	
	Dorchester County, SC.	
16740	Charlotte-Gastonia-Concord, NC-SC.	0.9760
	Anson County, NC.	
	Cabarrus County, NC.	
	Gaston County, NC.	
	Mecklenburg County, NC.	
	Union County, NC.	
	York County, SC.	
16820	Charlottesville, VA	1.0234
	Albemarle County, VA.	
	Fluvanna County, VA.	
	Greene County, VA.	
	Nelson County, VA.	
	Charlottesville City, VA.	
16860	Chattanooga, TN-GA.	0.9098
	Catoosa County, GA.	
	Dade County, GA.	
	Walker County, GA.	
	Hamilton County, TN.	
	Marion County, TN.	
	Sequatchie County, TN.	
16940	Cheyenne, WY	0.8784
	Laramie County, WY.	
16974	Chicago-Naperville-Joliet, IL.	1.0848
	Cook County, IL.	
	DeKalb County, IL.	
	DuPage County, IL.	
	Grundy County, IL.	
	Kane County, IL.	
	Kendall County, IL.	
	McHenry County, IL.	
	Will County, IL.	
17020	Chico, CA	1.0522
	Butte County, CA.	
17140	Cincinnati-Middletown, OH-KY-IN.	0.9623
	Dearborn County, IN.	
	Franklin County, IN.	
	Ohio County, IN.	
	Boone County, KY.	
	Bracken County, KY.	
	Campbell County, KY.	
	Gallatin County, KY.	
	Grant County, KY.	
	Kenton County, KY.	
	Pendleton County, KY.	
	Brown County, OH.	
	Butler County, OH.	
	Clermont County, OH.	
	Hamilton County, OH.	
	Warren County, OH.	
17300	Clarksville, TN-KY	0.8292
	Christian County, KY.	
	Trigg County, KY.	
	Montgomery County, TN.	
	Stewart County, TN.	
17420	Cleveland, TN	0.8141
	Bradley County, TN.	
	Polk County, TN.	
17460	Cleveland-Elyria-Mentor, OH.	0.9204
	Cuyahoga County, OH.	
	Geauga County, OH.	
	Lake County, OH.	
	Lorain County, OH.	
	Medina County, OH.	
17660	Coeur d'Alene, ID	0.9657
	Kootenai County, ID.	
17780	College Station-Bryan, TX.	0.8909
	Brazos County, TX.	
	Burleson County, TX.	
	Robertson County, TX.	
17820	Colorado Springs, CO.	0.9478
	El Paso County, CO.	
	Teller County, CO.	
17860	Columbia, MO	0.8354
	Boone County, MO.	
	Howard County, MO.	
17900	Columbia, SC	0.9047
	Calhoun County, SC.	
	Fairfield County, SC.	
	Kershaw County, SC.	
	Lexington County, SC.	
	Richland County, SC.	
	Saluda County, SC.	
17980	Columbus, GA-AL	0.8568
	Russell County, AL.	

TABLE 8.—PROPOSED WAGE INDEX FOR URBAN AREAS BASED ON CBSA LABOR MARKET AREAS—Continued

CBSA Code	Urban Area (Constituent Counties)	Wage Index
	Chattahoochee County, GA.	
	Harris County, GA.	
	Marion County, GA.	
	Muscogee County, GA.	
18020	Columbus, IN	0.9598
	Bartholomew County, IN.	
18140	Columbus, OH	0.9850
	Delaware County, OH.	
	Fairfield County, OH.	
	Franklin County, OH.	
	Licking County, OH.	
	Madison County, OH.	
	Morrow County, OH.	
	Pickaway County, OH.	
	Union County, OH.	
18580	Corpus Christi, TX	0.8559
	Aransas County, TX.	
	Nueces County, TX.	
	San Patricio County, TX.	
18700	Corvallis, OR	1.0739
	Benton County, OR.	
19060	Cumberland, MD-WV.	0.9326
	Allegany County, MD.	
	Mineral County, WV.	
19124	Dallas-Plano-Irving, TX.	1.0233
	Collin County, TX.	
	Dallas County, TX.	
	Delta County, TX.	
	Denton County, TX.	
	Ellis County, TX.	
	Hunt County, TX.	
	Kaufman County, TX.	
	Rockwall County, TX.	
19140	Dalton, GA	0.9044
	Murray County, GA.	
	Whitfield County, GA.	
19180	Danville, IL	0.9037
	Vermilion County, IL.	
19260	Danville, VA	0.8497
	Pittsylvania County, VA.	
	Danville City, VA.	
19340	Davenport-Moline-Rock Island, IA-IL.	0.8731
	Henry County, IL.	
	Mercer County, IL.	
	Rock Island County, IL.	
	Scott County, IA.	
19380	Dayton, OH	0.9073
	Greene County, OH.	
	Miami County, OH.	
	Montgomery County, OH.	
	Preble County, OH.	
19460	Decatur, AL	0.8478
	Lawrence County, AL.	
	Morgan County, AL.	
19500	Decatur, IL	0.8076
	Macon County, IL.	
19660	Deltona-Daytona Beach-Ormond Beach, FL.	0.9308
	Volusia County, FL.	
19740	Denver-Aurora, CO	1.0733
	Adams County, CO.	
	Arapahoe County, CO.	
	Broomfield County, CO.	
	Clear Creek County, CO.	
	Denver County, CO.	
	Douglas County, CO.	
	Elbert County, CO.	
	Gilpin County, CO.	
	Jefferson County, CO.	
	Park County, CO.	
19780	Des Moines, IA	0.9651
	Dallas County, IA.	
	Guthrie County, IA.	
	Madison County, IA.	
	Polk County, IA.	
	Warren County, IA.	
19804	Detroit-Livonia-Dearborn, MI.	1.0441
	Wayne County, MI.	
20020	Dothan, AL	0.7707
	Geneva County, AL.	
	Henry County, AL.	
	Houston County, AL.	
20100	Dover, DE	0.9779
	Kent County, DE.	
20220	Dubuque, IA	0.9135
	Dubuque County, IA.	
20260	Duluth, MN-WI	1.0209
	Carlton County, MN.	
	St. Louis County, MN.	
	Douglas County, WI.	
20500	Durham, NC	1.0303
	Chatham County, NC.	
	Durham County, NC.	
	Orange County, NC.	
	Person County, NC.	
20740	Eau Claire, WI	0.9210
	Chippewa County, WI.	
	Eau Claire County, WI.	
20764	Edison, NJ	1.1260
	Middlesex County, NJ.	
	Monmouth County, NJ.	
	Ocean County, NJ.	
	Somerset County, NJ.	
20940	El Centro, CA	0.8915
	Imperial County, CA.	
21060	Elizabethtown, KY	0.8810
	Hardin County, KY.	
	Larue County, KY.	
21140	Elkhart-Goshen, IN	0.9637
	Elkhart County, IN.	
21300	Elmira, NY	0.8259
	Chemung County, NY.	
21340	El Paso, TX	0.8924
	El Paso County, TX.	
21500	Erie, PA	0.8746
	Erie County, PA.	
21604	Essex County, MA	1.0533
	Essex County, MA.	
21660	Eugene-Springfield, OR.	1.0829
	Lane County, OR.	
21780	Evansville, IN-KY	0.8721
	Gibson County, IN.	
	Posey County, IN.	
	Vanderburgh County, IN.	
	Warrick County, IN.	
	Henderson County, KY.	
	Webster County, KY.	
21820	Fairbanks, AK	1.1419
	Fairbanks North Star Borough, AK.	
21940	Fajardo, PR	0.4157
	Ceiba Municipio, PR.	
	Fajardo Municipio, PR.	
	Luquillo Municipio, PR.	
22020	Fargo, ND-MN	0.8495
	Cass County, ND.	
	Clay County, MN.	
22140	Farmington, NM	0.8518
	San Juan County, NM.	
22180	Fayetteville, NC	0.9426
	Cumberland County, NC.	
	Hoke County, NC.	
22220	Fayetteville-Springdale-Rogers, AR-MO.	0.8563
	Benton County, AR.	
	Madison County, AR.	
	Washington County, AR.	
	McDonald County, MO.	
22380	Flagstaff, AZ	1.2105
	Coconino County, AZ.	
22420	Flint, MI	1.0663
	Genesee County, MI.	
22500	Florence, SC	0.8964
	Darlington County, SC.	
	Florence County, SC.	

TABLE 8.—PROPOSED WAGE INDEX FOR URBAN AREAS BASED ON CBSA LABOR MARKET AREAS—Continued

CBSA Code	Urban Area (Constituent Counties)	Wage Index
22520	Florence-Muscle Shoals, AL.	0.8280
	Colbert County, AL.	
	Lauderdale County, AL.	
22540	Fond du Lac, WI	0.9650
	Fond du Lac County, WI.	
22660	Fort Collins-Loveland, CO.	1.0132
	Larimer County, CO.	
22744	Fort Lauderdale-Pompano Beach-Deerfield Beach, FL.	1.0442
	Broward County, FL.	
22900	Fort Smith, AR-OK	0.8214
	Crawford County, AR.	
	Franklin County, AR.	
	Sebastian County, AR.	
	Le Flore County, OK.	
	Sequoyah County, OK.	
23020	Fort Walton Beach-Crestview-Destin, FL.	0.8881
	Okaloosa County, FL.	
23060	Fort Wayne, IN	0.9803
	Allen County, IN.	
	Wells County, IN.	
	Whitley County, IN.	
23104	Fort Worth-Arlington, TX.	0.9510
	Johnson County, TX.	
	Parker County, TX.	
	Tarrant County, TX.	
	Wise County, TX.	
23420	Fresno, CA	1.0541
	Fresno County, CA.	
23460	Gadsden, AL	0.7946
	Etowah County, AL.	
23540	Gainesville, FL	0.9474
	Alachua County, FL.	
	Gilchrist County, FL.	
23580	Gainesville, GA	0.8883
	Hall County, GA.	
23844	Gary, IN	0.9369
	Jasper County, IN.	
	Lake County, IN.	
	Newton County, IN.	
	Porter County, IN.	
24020	Glens Falls, NY	0.8567
	Warren County, NY.	
	Washington County, NY.	
24140	Goldsboro, NC	0.8784
	Wayne County, NC.	
24220	Grand Forks, ND-MN.	1.1516
	Polk County, MN.	
	Grand Forks County, ND.	
24300	Grand Junction, CO	0.9560
	Mesa County, CO.	
24340	Grand Rapids-Wyoming, MI.	0.9400
	Barry County, MI.	
	Ionia County, MI.	
	Kent County, MI.	
	Newaygo County, MI.	
24500	Great Falls, MT	0.9061
	Cascade County, MT.	
24540	Greeley, CO	0.9580
	Weld County, CO.	
24580	Green Bay, WI	0.9452
	Brown County, WI.	
	Kewaunee County, WI.	
	Oconto County, WI.	
24660	Greensboro-High Point, NC.	0.9113
	Guilford County, NC.	
	Randolph County, NC.	
	Rockingham County, NC.	
24780	Greenville, NC	0.9434
	Greene County, NC.	
	Pitt County, NC.	
24860	Greenville, SC	1.0165
	Greenville County, SC.	
	Laurens County, SC.	
	Pickens County, SC.	
25020	Guayama, PR	0.3184
	Arroyo Municipio, PR.	
	Guayama Municipio, PR.	
	Patillas Municipio, PR.	
25060	Gulfport-Biloxi, MS	0.8938
	Hancock County, MS.	
	Harrison County, MS.	
	Stone County, MS.	
25180	Hagerstown-Martinsburg, MD-WV.	0.9499
	Washington County, MD.	
	Berkeley County, WV.	
	Morgan County, WV.	
25260	Hanford-Corcoran, CA.	1.0046
	Kings County, CA.	
25420	Harrisburg-Carlisle, PA.	0.9322
	Cumberland County, PA.	
	Dauphin County, PA.	
	Perry County, PA.	
25500	Harrisonburg, VA	0.9098
	Rockingham County, VA.	
	Harrisonburg City, VA.	
25540	Hartford-West Hartford-East Hartford, CT.	1.1084
	Hartford County, CT.	
	Litchfield County, CT.	
	Middlesex County, CT.	
	Tolland County, CT.	
25620	Hattiesburg, MS	0.7609
	Forrest County, MS.	
	Lamar County, MS.	
	Perry County, MS.	
25860	Hickory-Lenoir-Morganton, NC.	0.8922
	Alexander County, NC.	
	Burke County, NC.	
	Caldwell County, NC.	
	Catawba County, NC.	
25980	Hinesville-Fort Stewart, GA [1].	0.9178
	Liberty County, GA.	
	Long County, GA.	
26100	Holland-Grand Haven, MI.	0.9064
	Ottawa County, MI.	
26180	Honolulu, HI	1.1208
	Honolulu County, HI.	
26300	Hot Springs, AR	0.9053
	Garland County, AR.	
26380	Houma-Bayou Cane-Thibodaux, LA.	0.7902
	Lafourche Parish, LA.	
	Terrebonne Parish, LA.	
26420	Houston-Baytown-Sugar Land, TX.	1.0005
	Austin County, TX.	
	Brazoria County, TX.	
	Chambers County, TX.	
	Fort Bend County, TX.	
	Galveston County, TX.	
	Harris County, TX.	
	Liberty County, TX.	
	Montgomery County, TX.	
	San Jacinto County, TX.	
	Waller County, TX.	
26580	Huntington-Ashland, WV-KY-OH.	0.9486
	Boyd County, KY.	
	Greenup County, KY.	
	Lawrence County, OH.	
	Cabell County, WV.	
	Wayne County, WV.	
26620	Huntsville, AL	0.9149

TABLE 8.—PROPOSED WAGE INDEX FOR URBAN AREAS BASED ON CBSA LABOR MARKET AREAS—Continued

CBSA Code	Urban Area (Constituent Counties)	Wage Index
	Limestone County, AL.	
	Madison County, AL.	
26820	Idaho Falls, ID	0.9429
	Bonneville County, ID.	
	Jefferson County, ID.	
26900	Indianapolis, IN	0.9930
	Boone County, IN.	
	Brown County, IN.	
	Hamilton County, IN.	
	Hancock County, IN.	
	Hendricks County, IN.	
	Johnson County, IN.	
	Marion County, IN.	
	Morgan County, IN.	
	Putnam County, IN.	
	Shelby County, IN.	
26980	Iowa City, IA	0.9756
	Johnson County, IA.	
	Washington County, IA.	
27060	Ithaca, NY	0.9803
	Tompkins County, NY.	
27100	Jackson, MI	0.9313
	Jackson County, MI.	
27140	Jackson, MS	0.8319
	Copiah County, MS.	
	Hinds County, MS.	
	Madison County, MS.	
	Rankin County, MS.	
	Simpson County, MS.	
27180	Jackson, TN	0.8973
	Chester County, TN.	
	Madison County, TN.	
27260	Jacksonville, FL	0.9299
	Baker County, FL.	
	Clay County, FL.	
	Duval County, FL.	
	Nassau County, FL.	
	St. Johns County, FL.	
27340	Jacksonville, NC	0.8244
	Onslow County, NC.	
27500	Janesville, WI	0.9547
	Rock County, WI.	
27620	Jefferson City, MO	0.8396
	Callaway County, MO.	
	Cole County, MO.	
	Moniteau County, MO.	
	Osage County, MO.	
27740	Johnson City, TN	0.7945
	Carter County, TN.	
	Unicoi County, TN.	
	Washington County, TN.	
27780	Johnstown, PA	0.8362
	Cambria County, PA.	
27860	Jonesboro, AR	0.7919
	Craighead County, AR.	
	Poinsett County, AR.	
27900	Joplin, MO	0.8590
	Jasper County, MO.	
	Newton County, MO.	
28020	Kalamazoo-Portage, MI.	1.0391
	Kalamazoo County, MI.	
	Van Buren County, MI.	
28100	Kankakee-Bradley, IL.	1.0974
	Kankakee County, IL.	
28140	Kansas City, MO-KS	0.9467
	Franklin County, KS.	
	Johnson County, KS.	
	Leavenworth County, KS.	
	Linn County, KS.	
	Miami County, KS.	
	Wyandotte County, KS.	
	Bates County, MO.	
	Caldwell County, MO.	
	Cass County, MO.	
	Clay County, MO.	
	Clinton County, MO.	
	Jackson County, MO.	
	Lafayette County, MO.	
	Platte County, MO.	
	Ray County, MO.	
28420	Kennewick-Richland-Pasco, WA.	1.0630
	Benton County, WA.	
	Franklin County, WA.	
28660	Killeen-Temple-Fort Hood, TX.	0.8535
	Bell County, TX.	
	Coryell County, TX.	
	Lampasas County, TX.	
28700	Kingsport-Bristol-Bristol, TN-VA.	0.8062
	Hawkins County, TN.	
	Sullivan County, TN.	
	Bristol City, VA.	
	Scott County, VA.	
	Washington County, VA.	
28740	Kingston, NY	0.9257
	Ulster County, NY.	
28940	Knoxville, TN	0.8454
	Anderson County, TN.	
	Blount County, TN.	
	Knox County, TN.	
	Loudon County, TN.	
	Union County, TN.	
29020	Kokomo, IN	0.9517
	Howard County, IN.	
	Tipton County, IN.	
29100	La Crosse, WI-MN	0.9573
	Houston County, MN.	
	La Crosse County, WI.	
29140	Lafayette, IN	0.8745
	Benton County, IN.	
	Carroll County, IN.	
	Tippecanoe County, IN.	
29180	Lafayette, LA	0.8436
	Lafayette Parish, LA.	
	St. Martin Parish, LA.	
29340	Lake Charles, LA	0.7841
	Calcasieu Parish, LA.	
	Cameron Parish, LA.	
29404	Lake County-Kenosha County, IL-WI.	1.0440
	Lake County, IL.	
	Kenosha County, WI.	
29460	Lakeland, FL	0.8921
	Polk County, FL.	
29540	Lancaster, PA	0.9704
	Lancaster County, PA.	
29620	Lansing-East Lansing, MI.	0.9792
	Clinton County, MI.	
	Eaton County, MI.	
	Ingham County, MI.	
29700	Laredo, TX	0.8076
	Webb County, TX.	
29740	Las Cruces, NM	0.8475
	Dona Ana County, NM.	
29820	Las Vegas-Paradise, NV.	1.1449
	Clark County, NV.	
29940	Lawrence, KS	0.8546
	Douglas County, KS.	
30020	Lawton, OK	0.7880
	Comanche County, OK.	
30140	Lebanon, PA	0.8468
	Lebanon County, PA.	
30300	Lewiston, ID-WA	0.9896
	Nez Perce County, ID.	
	Asotin County, WA.	
30340	Lewiston-Auburn, ME.	0.9341
	Androscoggin County, ME.	
30460	Lexington-Fayette, KY.	0.9084
	Bourbon County, KY.	
	Clark County, KY.	
	Fayette County, KY.	
	Jessamine County, KY.	
	Scott County, KY.	
	Woodford County, KY.	
30620	Lima, OH	0.9234
	Allen County, OH.	

TABLE 8.—PROPOSED WAGE INDEX FOR URBAN AREAS BASED ON CBSA LABOR MARKET AREAS—Continued

CBSA Code	Urban Area (Constituent Counties)	Wage Index
30700	Lincoln, NE	1.0225
	Lancaster County, NE.	
	Seward County, NE.	
30780	Little Rock-North Little Rock, AR.	0.8756
	Faulkner County, AR.	
	Grant County, AR.	
	Lonoke County, AR.	
	Perry County, AR.	
	Pulaski County, AR.	
	Saline County, AR.	
30860	Logan, UT-ID	0.9173
	Franklin County, ID.	
	Cache County, UT.	
30980	Longview, TX	0.8739
	Gregg County, TX.	
	Rusk County, TX.	
	Upshur County, TX.	
31020	Longview, WA	0.9523
	Cowlitz County, WA.	
31084	Los Angeles-Long Beach-Glendale, CA.	1.1752
	Los Angeles County, CA.	
31140	Louisville, KY-IN	0.9261
	Clark County, IN.	
	Floyd County, IN.	
	Harrison County, IN.	
	Washington County, IN.	
	Bullitt County, KY.	
	Henry County, KY.	
	Jefferson County, KY.	
	Meade County, KY.	
	Nelson County, KY.	
	Oldham County, KY.	
	Shelby County, KY.	
	Spencer County, KY.	
	Trimble County, KY.	
31180	Lubbock, TX	0.8792
	Crosby County, TX.	
	Lubbock County, TX.	
31340	Lynchburg, VA	0.8700
	Amherst County, VA.	
	Appomattox County, VA.	
	Bedford County, VA.	
	Campbell County, VA.	
	Bedford City, VA.	
	Lynchburg City, VA.	
31420	Macon, GA	0.9453
	Bibb County, GA.	
	Crawford County, GA.	
	Jones County, GA.	
	Monroe County, GA.	
	Twiggs County, GA.	
31460	Madera, CA	0.8721
	Madera County, CA.	
31540	Madison, WI	1.0635
	Columbia County, WI.	
	Dane County, WI.	
	Iowa County, WI.	
31700	Manchester-Nashua, NH.	1.0335
	Hillsborough County, NH.	
	Merrimack County, NH.	
31900	Mansfield, OH [1]	0.8887
	Richland County, OH.	
32420	Mayagüez, PR	0.4017
	Hormigueros Municipio, PR.	
	Mayagüez Municipio, PR.	
32580	McAllen-Edinburg-Pharr, TX.	0.8943
	Hidalgo County, TX.	
32780	Medford, OR	1.0235
	Jackson County, OR.	
32820	Memphis, TN-MS-AR.	0.9341
	Crittenden County, AR.	
	DeSoto County, MS.	
	Marshall County, MS.	
	Tate County, MS.	
	Tunica County, MS.	
	Fayette County, TN.	
	Shelby County, TN.	
	Tipton County, TN.	
32900	Merced, CA	1.1120
	Merced County, CA.	
33124	Miami-Miami Beach-Kendall, FL.	0.9759
	Miami-Dade County, FL.	
33140	Michigan City-La Porte, IN.	0.9409
	LaPorte County, IN.	
33260	Midland, TX	0.9523
	Midland County, TX.	
33340	Milwaukee-Waukesha-West Allis, WI.	1.0106
	Milwaukee County, WI.	
	Ozaukee County, WI.	
	Washington County, WI.	
	Waukesha County, WI.	
33460	Minneapolis-St. Paul-Bloomington, MN-WI.	1.1078
	Anoka County, MN.	
	Carver County, MN.	
	Chisago County, MN.	
	Dakota County, MN.	
	Hennepin County, MN.	
	Isanti County, MN.	
	Ramsey County, MN.	
	Scott County, MN.	
	Sherburne County, MN.	
	Washington County, MN.	
	Wright County, MN.	
	Pierce County, WI.	
	St. Croix County, WI.	
33540	Missoula, MT	0.9482
	Missoula County, MT.	
33660	Mobile, AL	0.7895
	Mobile County, AL.	
33700	Modesto, CA	1.1804
	Stanislaus County, CA.	
33740	Monroe, LA	0.8040
	Ouachita Parish, LA.	
	Union Parish, LA.	
33780	Monroe, MI	0.9478
	Monroe County, MI.	
33860	Montgomery, AL	0.8588
	Autauga County, AL.	
	Elmore County, AL.	
	Lowndes County, AL.	
	Montgomery County, AL.	
34060	Morgantown, WV	0.8428
	Monongalia County, WV.	
	Preston County, WV.	
34100	Morristown, TN	0.8753
	Grainger County, TN.	
	Hamblen County, TN.	
	Jefferson County, TN.	
34580	Mount Vernon-Anacortes, WA.	1.0465
	Skagit County, WA.	
34620	Muncie, IN	0.8939
	Delaware County, IN.	
34740	Muskegon-Norton Shores, MI.	0.9673
	Muskegon County, MI.	
34820	Myrtle Beach-Conway-North Myrtle Beach, SC.	0.8873
	Horry County, SC.	
34900	Napa, CA	1.2656
	Napa County, CA.	
34940	Naples-Marco Island, FL.	1.0140
	Collier County, FL.	
34980	Nashville-Davidson—Murfreesboro, TN.	0.9769
	Cannon County, TN.	
	Cheatham County, TN.	

TABLE 8.—PROPOSED WAGE INDEX FOR URBAN AREAS BASED ON CBSA LABOR MARKET AREAS—Continued

CBSA Code	Urban Area (Constituent Counties)	Wage Index
	Davidson County, TN.	
	Dickson County, TN.	
	Hickman County, TN.	
	Macon County, TN.	
	Robertson County, TN.	
	Rutherford County, TN.	
	Smith County, TN.	
	Sumner County, TN.	
	Trousdale County, TN.	
	Williamson County, TN.	
	Wilson County, TN.	
35004	Nassau-Suffolk, NY	1.2760
	Nassau County, NY.	
	Suffolk County, NY.	
35084	Newark-Union, NJ-PA.	1.2195
	Essex County, NJ.	
	Hunterdon County, NJ.	
	Morris County, NJ.	
	Sussex County, NJ.	
	Union County, NJ.	
	Pike County, PA.	
35300	New Haven-Milford, CT.	1.1702
	New Haven County, CT.	
35380	New Orleans-Metairie-Kenner, LA.	0.9005
	Jefferson Parish, LA.	
	Orleans Parish, LA.	
	Plaquemines Parish, LA.	
	St. Bernard Parish, LA.	
	St. Charles Parish, LA.	
	St. John the Baptist Parish, LA.	
	St. Tammany Parish, LA.	
35644	New York-Wayne-White Plains, NY-NJ.	1.3185
	Bergen County, NJ.	
	Hudson County, NJ.	
	Passaic County, NJ.	
	Bronx County, NY.	
	Kings County, NY.	
	New York County, NY.	
	Putnam County, NY.	
	Queens County, NY.	
	Richmond County, NY.	
	Rockland County, NY.	
	Westchester County, NY.	

TABLE 8.—PROPOSED WAGE INDEX FOR URBAN AREAS BASED ON CBSA LABOR MARKET AREAS—Continued

CBSA Code	Urban Area (Constituent Counties)	Wage Index
35660	Niles-Benton Harbor, MI.	0.8888
	Berrien County, MI.	
35980	Norwich-New London, CT.	1.1356
	New London County, CT.	
36084	Oakland-Fremont-Hayward, CA.	1.5346
	Alameda County, CA.	
	Contra Costa County, CA.	
36100	Ocala, FL	0.8934
	Marion County, FL.	
36140	Ocean City, NJ	1.1022
	Cape May County, NJ.	
36220	Odessa, TX	0.9894
	Ector County, TX.	
36260	Ogden-Clearfield, UT.	0.9038
	Davis County, UT.	
	Morgan County, UT.	
	Weber County, UT.	
36420	Oklahoma City, OK	0.9040
	Canadian County, OK.	
	Cleveland County, OK.	
	Grady County, OK.	
	Lincoln County, OK.	
	Logan County, OK.	
	McClain County, OK.	
	Oklahoma County, OK.	
36500	Olympia, WA	1.0938
	Thurston County, WA.	
36540	Omaha-Council Bluffs, NE-IA.	0.9569
	Harrison County, IA.	
	Mills County, IA.	
	Pottawattamie County, IA.	
	Cass County, NE.	
	Douglas County, NE.	
	Sarpy County, NE.	
	Saunders County, NE.	
	Washington County, NE.	
36740	Orlando, FL	0.9459
	Lake County, FL.	
	Orange County, FL.	
	Osceola County, FL.	
	Seminole County, FL.	
36780	Oshkosh-Neenah, WI.	0.9192
	Winnebago County, WI.	
36980	Owensboro, KY	0.8789
	Daviess County, KY.	
	Hancock County, KY.	
	McLean County, KY.	

TABLE 8.—PROPOSED WAGE INDEX FOR URBAN AREAS BASED ON CBSA LABOR MARKET AREAS—Continued

CBSA Code	Urban Area (Constituent Counties)	Wage Index
37100	Oxnard-Thousand Oaks-Ventura, CA.	1.1613
	Ventura County, CA.	
37340	Palm Bay-Melbourne-Titusville, FL.	0.9835
	Brevard County, FL.	
37460	Panama City-Lynn Haven, FL.	0.7989
	Bay County, FL.	
37620	Parkersburg-Marietta, WV-OH.	0.8278
	Washington County, OH.	
	Pleasants County, WV.	
	Wirt County, WV.	
	Wood County, WV.	
37700	Pascagoula, MS	0.8165
	George County, MS.	
	Jackson County, MS.	
37860	Pensacola-Ferry Pass-Brent, FL.	0.8104
	Escambia County, FL.	
	Santa Rosa County, FL.	
37900	Peoria, IL	0.8868
	Marshall County, IL.	
	Peoria County, IL.	
	Stark County, IL.	
	Tazewell County, IL.	
	Woodford County, IL.	
37964	Philadelphia, PA	1.1040
	Bucks County, PA.	
	Chester County, PA.	
	Delaware County, PA.	
	Montgomery County, PA.	
	Philadelphia County, PA.	
38060	Phoenix-Mesa-Scottsdale, AZ.	1.0138
	Maricopa County, AZ.	
	Pinal County, AZ.	
38220	Pine Bluff, AR	0.8689
	Cleveland County, AR.	
	Jefferson County, AR.	
	Lincoln County, AR.	
38300	Pittsburgh, PA	0.8853
	Allegheny County, PA.	
	Armstrong County, PA.	
	Beaver County, PA.	
	Butler County, PA.	
	Fayette County, PA.	
	Washington County, PA.	
	Westmoreland County, PA.	
38340	Pittsfield, MA	1.0191

TABLE 8.—PROPOSED WAGE INDEX FOR URBAN AREAS BASED ON CBSA LABOR MARKET AREAS—Continued

CBSA Code	Urban Area (Constituent Counties)	Wage Index
	Berkshire County, MA.	
38540	Pocatello, ID	0.9360
	Bannock County, ID.	
	Power County, ID.	
38660	Ponce, PR	0.5177
	Juana Díaz Municipio, PR.	
	Ponce Municipio, PR.	
	Villalba Municipio, PR.	
38860	Portland-South Portland-Biddeford, ME.	1.0392
	Cumberland County, ME.	
	Sagadahoc County, ME.	
	York County, ME.	
38900	Portland-Vancouver-Beaverton, OR-WA.	1.1260
	Clackamas County, OR.	
	Columbia County, OR.	
	Multnomah County, OR.	
	Washington County, OR.	
	Yamhill County, OR.	
	Clark County, WA.	
	Skamania County, WA.	
38940	Port St. Lucie-Fort Pierce, FL.	1.0133
	Martin County, FL.	
	St. Lucie County, FL.	
39100	Poughkeepsie-Newburgh-Middletown, NY.	1.0766
	Dutchess County, NY.	
	Orange County, NY.	
39140	Prescott, AZ	0.9879
	Yavapai County, AZ.	
39300	Providence-New Bedford-Fall River, RI-MA.	1.0966
	Bristol County, MA.	
	Bristol County, RI.	
	Kent County, RI.	
	Newport County, RI.	
	Providence County, RI.	
	Washington County, RI.	
39340	Provo-Orem, UT	0.9510
	Juab County, UT.	
	Utah County, UT.	
39380	Pueblo, CO	0.8632
	Pueblo County, CO.	
39460	Punta Gorda, FL	0.9264
	Charlotte County, FL.	
39540	Racine, WI	0.9006
	Racine County, WI.	
39580	Raleigh-Cary, NC	0.9733
	Franklin County, NC.	
	Johnston County, NC.	
	Wake County, NC.	
39660	Rapid City, SD	0.9021
	Meade County, SD.	
	Pennington County, SD.	
39740	Reading, PA	0.9696
	Berks County, PA.	
39820	Redding, CA	1.2215
	Shasta County, CA.	
39900	Reno-Sparks, NV	1.0993
	Storey County, NV.	
	Washoe County, NV.	
40060	Richmond, VA	0.9338
	Amelia County, VA.	
	Caroline County, VA.	
	Charles City County, VA.	
	Chesterfield County, VA.	
	Cumberland County, VA.	
	Dinwiddie County, VA.	
	Goochland County, VA.	
	Hanover County, VA.	
	Henrico County, VA.	
	King and Queen County, VA.	
	King William County, VA.	
	Louisa County, VA.	
	New Kent County, VA.	
	Powhatan County, VA.	
	Prince George County, VA.	
	Sussex County, VA.	
	Colonial Heights City, VA.	
	Hopewell City, VA.	
	Petersburg City, VA.	
	Richmond City, VA.	
40140	Riverside-San Bernardino-Ontario, CA.	1.1022
	Riverside County, CA.	
	San Bernardino County, CA.	
40220	Roanoke, VA	0.8383
	Botetourt County, VA.	
	Craig County, VA.	
	Franklin County, VA.	
	Roanoke County, VA.	
	Roanoke City, VA.	
	Salem City, VA.	
40340	Rochester, MN	1.1142
	Dodge County, MN.	
	Olmsted County, MN.	
	Wabasha County, MN.	
40380	Rochester, NY	0.9115
	Livingston County, NY.	
	Monroe County, NY.	
	Ontario County, NY.	
	Orleans County, NY.	
	Wayne County, NY.	
40420	Rockford, IL	0.9994
	Boone County, IL.	
	Winnebago County, IL.	
40484	Rockingham County-Strafford County, NH.	1.0385
	Rockingham County, NH.	
	Strafford County, NH.	
40580	Rocky Mount, NC	0.8924
	Edgecombe County, NC.	
	Nash County, NC.	
40660	Rome, GA	0.9424
	Floyd County, GA.	
40900	Sacramento—Arden-Arcade—Roseville, CA.	1.2973
	El Dorado County, CA.	
	Placer County, CA.	
	Sacramento County, CA.	
	Yolo County, CA.	
40980	Saginaw-Saginaw Township North, MI.	0.9420
	Saginaw County, MI.	
41060	St. Cloud, MN	0.9975
	Benton County, MN.	
	Stearns County, MN.	
41100	St. George, UT	0.9402
	Washington County, UT.	
41140	St. Joseph, MO-KS	0.9529
	Doniphan County, KS.	
	Andrew County, MO.	
	Buchanan County, MO.	
	DeKalb County, MO.	
41180	St. Louis, MO-IL	0.8949
	Bond County, IL.	
	Calhoun County, IL.	
	Clinton County, IL.	
	Jersey County, IL.	
	Macoupin County, IL.	
	Madison County, IL.	
	Monroe County, IL.	
	St. Clair County, IL.	
	Crawford County, MO.	
	Franklin County, MO.	

TABLE 8.—PROPOSED WAGE INDEX FOR URBAN AREAS BASED ON CBSA LABOR MARKET AREAS—Continued

CBSA Code	Urban Area (Constituent Counties)	Wage Index
	Jefferson County, MO.	
	Lincoln County, MO.	
	St. Charles County, MO.	
	St. Louis County, MO.	
	Warren County, MO.	
	Washington County, MO.	
	St. Louis City, MO.	
41420	Salem, OR	1.0452
	Marion County, OR.	
	Polk County, OR.	
41500	Salinas, CA	1.4142
	Monterey County, CA.	
41540	Salisbury, MD	0.9073
	Somerset County, MD.	
	Wicomico County, MD.	
41620	Salt Lake City, UT	0.9433
	Salt Lake County, UT.	
	Summit County, UT.	
	Tooele County, UT.	
41660	San Angelo, TX	0.8280
	Irion County, TX.	
	Tom Green County, TX.	
41700	San Antonio, TX	0.8989
	Atascosa County, TX.	
	Bandera County, TX.	
	Bexar County, TX.	
	Comal County, TX.	
	Guadalupe County, TX.	
	Kendall County, TX.	
	Medina County, TX.	
	Wilson County, TX.	
41740	San Diego-Carlsbad-San Marcos, CA.	1.1424
	San Diego County, CA.	
41780	Sandusky, OH	0.9025
	Erie County, OH.	
41884	San Francisco-San Mateo-Redwood City, CA.	1.4990
	Marin County, CA.	
	San Francisco County, CA.	
	San Mateo County, CA.	
41900	San Germán-Cabo Rojo, PR.	0.4655
	Cabo Rojo Municipio, PR.	
	Lajas Municipio, PR.	
	Sabana Grande Municipio, PR.	
	San Germán Municipio, PR.	
41940	San Jose-Sunnyvale-Santa Clara, CA.	1.5125
	San Benito County, CA.	
	Santa Clara County, CA.	
41980	San Juan-Caguas-Guaynabo, PR.	0.4686
	Aguas Buenas Municipio, PR.	
	Aibonito Municipio, PR.	
	Arecibo Municipio, PR.	
	Barceloneta Municipio, PR.	
	Barranquitas Municipio, PR.	
	Bayamón Municipio, PR.	
	Caguas Municipio, PR.	
	Camuy Municipio, PR.	
	Canóvanas Municipio, PR.	
	Carolina Municipio, PR.	
	Cataño Municipio, PR.	
	Cayey Municipio, PR.	
	Ciales Municipio, PR.	
	Cidra Municipio, PR.	
	Comerío Municipio, PR.	
	Corozal Municipio, PR.	
	Dorado Municipio, PR.	
	Florida Municipio, PR.	
	Guaynabo Municipio, PR.	
	Gurabo Municipio, PR.	
	Hatillo Municipio, PR.	
	Humacao Municipio, PR.	
	Juncos Municipio, PR.	
	Las Piedras Municipio, PR.	
	Loíza Municipio, PR.	
	Manatí Municipio, PR.	
	Maunabo Municipio, PR.	
	Morovis Municipio, PR.	
	Naguabo Municipio, PR.	
	Naranjito Municipio, PR.	
	Orocovis Municipio, PR.	
	Quebradillas Municipio, PR.	
	Río Grande Municipio, PR.	
	San Juan Municipio, PR.	
	San Lorenzo Municipio, PR.	
	Toa Alta Municipio, PR.	
	Toa Baja Municipio, PR.	
	Trujillo Alto Municipio, PR.	
	Vega Alta Municipio, PR.	
	Vega Baja Municipio, PR.	
	Yabucoa Municipio, PR.	
42020	San Luis Obispo-Paso Robles, CA.	1.1360
	San Luis Obispo County, CA.	
42044	Santa Ana-Anaheim-Irvine, CA.	1.1576
	Orange County, CA.	
42060	Santa Barbara-Santa Maria-Goleta, CA.	1.1538
	Santa Barbara County, CA.	
42100	Santa Cruz-Watsonville, CA.	1.5182
	Santa Cruz County, CA.	
42140	Santa Fe, NM	1.0931
	Santa Fe County, NM.	
42220	Santa Rosa-Petaluma, CA.	1.3506
	Sonoma County, CA.	
42260	Sarasota-Bradenton-Venice, FL.	0.9555
	Manatee County, FL.	
	Sarasota County, FL.	
42340	Savannah, GA	0.9480
	Bryan County, GA.	
	Chatham County, GA.	
	Effingham County, GA.	
42540	Scranton—Wilkes-Barre, PA.	0.8548
	Lackawanna County, PA.	
	Luzerne County, PA.	
	Wyoming County, PA.	
42644	Seattle-Bellevue-Everett, WA.	1.1589
	King County, WA.	

TABLE 8.—PROPOSED WAGE INDEX FOR URBAN AREAS BASED ON CBSA LABOR MARKET AREAS—Continued

CBSA Code	Urban Area (Constituent Counties)	Wage Index
	Snohomish County, WA.	
43100	Sheboygan, WI	0.8920
	Sheboygan County, WI.	
43300	Sherman-Denison, TX.	0.9516
	Grayson County, TX.	
43340	Shreveport-Bossier City, LA.	0.8769
	Bossier Parish, LA.	
	Caddo Parish, LA.	
	De Soto Parish, LA.	
43580	Sioux City, IA-NE-SD.	0.9376
	Woodbury County, IA.	
	Dakota County, NE.	
	Dixon County, NE.	
	Union County, SD.	
43620	Sioux Falls, SD	0.9645
	Lincoln County, SD.	
	McCook County, SD.	
	Minnehaha County, SD.	
	Turner County, SD.	
43780	South Bend-Mishawaka, IN-MI.	0.9798
	St. Joseph County, IN.	
	Cass County, MI.	
43900	Spartanburg, SC	0.9181
	Spartanburg County, SC.	
44060	Spokane, WA	1.0916
	Spokane County, WA.	
44100	Springfield, IL	0.8885
	Menard County, IL.	
	Sangamon County, IL.	
44140	Springfield, MA	1.0259
	Franklin County, MA.	
	Hampden County, MA.	
	Hampshire County, MA.	
44180	Springfield, MO	0.8246
	Christian County, MO.	
	Dallas County, MO.	
	Greene County, MO.	
	Polk County, MO.	
	Webster County, MO.	
44220	Springfield, OH	0.8404
	Clark County, OH.	
44300	State College, PA	0.8364
	Centre County, PA.	
44700	Stockton, CA	1.1311
	San Joaquin County, CA.	
44940	Sumter, SC	0.8386
	Sumter County, SC.	
45060	Syracuse, NY	0.9581
	Madison County, NY.	
	Onondaga County, NY.	
	Oswego County, NY.	
45104	Tacoma, WA	1.0753
	Pierce County, WA.	
45220	Tallahassee, FL	0.8697
	Gadsden County, FL.	
	Jefferson County, FL.	
	Leon County, FL.	
	Wakulla County, FL.	
45300	Tampa-St. Petersburg-Clearwater, FL.	0.9193
	Hernando County, FL.	
	Hillsborough County, FL.	
	Pasco County, FL.	
	Pinellas County, FL.	
45460	Terre Haute, IN	0.8313
	Clay County, IN.	
	Sullivan County, IN.	
	Vermillion County, IN.	
	Vigo County, IN.	
45500	Texarkana, TX-Texarkana, AR.	0.8291
	Miller County, AR.	
	Bowie County, TX.	
45780	Toledo, OH	0.9584
	Fulton County, OH.	
	Lucas County, OH.	
	Ottawa County, OH.	
	Wood County, OH.	
45820	Topeka, KS	0.8929
	Jackson County, KS.	
	Jefferson County, KS.	
	Osage County, KS.	
	Shawnee County, KS.	
	Wabaunsee County, KS.	
45940	Trenton-Ewing, NJ	1.0845
	Mercer County, NJ.	
46060	Tucson, AZ	0.8987
	Pima County, AZ.	
46140	Tulsa, OK	0.8286
	Creek County, OK.	
	Okmulgee County, OK.	
	Osage County, OK.	
	Pawnee County, OK.	
	Rogers County, OK.	
	Tulsa County, OK.	
	Wagoner County, OK.	
46220	Tuscaloosa, AL	0.8721
	Greene County, AL.	
	Hale County, AL.	
	Tuscaloosa County, AL.	
46340	Tyler, TX	0.9307
	Smith County, TX.	
46540	Utica-Rome, NY	0.8293
	Herkimer County, NY.	
	Oneida County, NY.	
46660	Valdosta, GA	0.8875
	Brooks County, GA.	
	Echols County, GA.	
	Lanier County, GA.	
	Lowndes County, GA.	
46700	Vallejo-Fairfield, CA	1.4899
	Solano County, CA.	
46940	Vero Beach, FL	0.9444
	Indian River County, FL.	
47020	Victoria, TX	0.8168
	Calhoun County, TX.	
	Goliad County, TX.	
	Victoria County, TX.	
47220	Vineland-Millville-Bridgeton, NJ.	0.9837
	Cumberland County, NJ.	
47260	Virginia Beach-Norfolk-Newport News, VA-NC.	0.8808
	Currituck County, NC.	
	Gloucester County, VA.	
	Isle of Wight County, VA.	
	James City County, VA.	
	Mathews County, VA.	
	Surry County, VA.	
	York County, VA.	
	Chesapeake City, VA.	
	Hampton City, VA.	
	Newport News City, VA.	
	Norfolk City, VA.	
	Poquoson City, VA.	
	Portsmouth City, VA.	
	Suffolk City, VA.	
	Virginia Beach City, VA.	
	Williamsburg City, VA.	
47300	Visalia-Porterville, CA.	1.0074
	Tulare County, CA.	
47380	Waco, TX	0.8527
	McLennan County, TX.	
47580	Warner Robins, GA	0.8654
	Houston County, GA.	
47644	Warren-Farmington Hills-Troy, MI.	0.9861
	Lapeer County, MI.	
	Livingston County, MI.	
	Macomb County, MI.	
	Oakland County, MI.	
	St. Clair County, MI.	

TABLE 8.—PROPOSED WAGE INDEX FOR URBAN AREAS BASED ON CBSA LABOR MARKET AREAS—Continued

CBSA Code	Urban Area (Constituent Counties)	Wage Index
47894	Washington-Arlington-Alexandria, DC-VA-MD-WV.	1.0932
	District of Columbia, DC.	
	Calvert County, MD.	
	Charles County, MD.	
	Prince George's County, MD.	
	Arlington County, VA.	
	Clarke County, VA.	
	Fairfax County, VA.	
	Fauquier County, VA.	
	Loudoun County, VA.	
	Prince William County, VA.	
	Spotsylvania County, VA.	
	Stafford County, VA.	
	Warren County, VA.	
	Alexandria City, VA.	
	Fairfax City, VA.	
	Falls Church City, VA.	
	Fredericksburg City, VA.	
	Manassas City, VA.	
	Manassas Park City, VA.	
	Jefferson County, WV.	
47940	Waterloo-Cedar Falls, IA.	0.8566
	Black Hawk County, IA.	
	Bremer County, IA.	
	Grundy County, IA.	
48140	Wausau, WI	0.9600
	Marathon County, WI.	
48260	Weirton-Steubenville, WV-OH.	0.7827
	Jefferson County, OH.	
	Brooke County, WV.	
	Hancock County, WV.	
48300	Wenatchee, WA	1.0080
	Chelan County, WA.	
	Douglas County, WA.	
48424	West Palm Beach-Boca Raton-Boynton Beach, FL.	1.0077
	Palm Beach County, FL.	
48540	Wheeling, WV-OH	0.7168
	Belmont County, OH.	
	Marshall County, WV.	
	Ohio County, WV.	
48620	Wichita, KS	0.9141
	Butler County, KS.	
	Harvey County, KS.	
	Sedgwick County, KS.	
	Sumner County, KS.	
48660	Wichita Falls, TX	0.8294
	Archer County, TX.	
	Clay County, TX.	
	Wichita County, TX.	
48700	Williamsport, PA	0.8377
	Lycoming County, PA.	
48864	Wilmington, DE-MD-NJ.	1.0482
	New Castle County, DE.	
	Cecil County, MD.	
	Salem County, NJ.	
48900	Wilmington, NC	0.9592
	Brunswick County, NC.	
	New Hanover County, NC.	
	Pender County, NC.	
49020	Winchester, VA-WV	1.0224
	Frederick County, VA.	
	Winchester City, VA.	
	Hampshire County, WV.	
49180	Winston-Salem, NC	0.8953
	Davie County, NC.	
	Forsyth County, NC.	
	Stokes County, NC.	
	Yadkin County, NC.	
49340	Worcester, MA	1.1039
	Worcester County, MA.	
49420	Yakima, WA	1.0165
	Yakima County, WA.	
49500	Yauco, PR	0.4413
	Guánica Municipio, PR.	
	Guayanilla Municipio, PR.	
	Peñuelas Municipio, PR.	
	Yauco Municipio, PR.	
49620	York-Hanover, PA	0.9420
	York County, PA.	
49660	Youngstown-Warren-Boardman, OH-PA.	0.8611
	Mahoning County, OH.	
	Trumbull County, OH.	
	Mercer County, PA.	
49700	Yuba City, CA	1.0932
	Sutter County, CA.	
	Yuba County, CA.	
49740	Yuma, AZ	0.9135
	Yuma County, AZ.	

[1]At this time, there are no hospitals located in these urban areas on which to base a wage index. Therefore, the urban wage index value is based on the average wage index for all urban areas within the state.

TABLE 9.—PROPOSED WAGE INDEX BASED ON CBSA LABOR MARKET AREAS FOR RURAL AREAS

CBSA Code	Nonurban Area	Wage Index
01	Alabama	0.7477
02	Alaska	1.1990
03	Arizona	0.8777
04	Arkansas	0.7451
05	California	1.0857
06	Colorado	0.9389
07	Connecticut	1.1794
08	Delaware	0.9606
10	Florida	0.8598
11	Georgia	0.7666
12	Hawaii	1.0562
13	Idaho	0.8045
14	Illinois	0.8279
15	Indiana	0.8630
16	Iowa	0.8502
17	Kansas	0.7987
18	Kentucky	0.7774
19	Louisiana	0.7418
20	Maine	0.8852
21	Maryland	0.9095
22	Massachusetts[2]	1.0216
23	Michigan	0.8870
24	Minnesota	0.9183
25	Mississippi	0.7671
26	Missouri	0.7909
27	Montana	0.8833
28	Nebraska	0.8665
29	Nevada	0.9074
30	New Hampshire	1.0677
31	New Jersey[2]	.....
32	New Mexico	0.8644
33	New York	0.8157
34	North Carolina	0.8567
35	North Dakota	0.7268
36	Ohio	0.8786
37	Oklahoma	0.7589
38	Oregon	0.9830
39	Pennsylvania	0.8302
40	Puerto Rico[2]	0.4047
41	Rhode Island[2]	.....
42	South Carolina	0.8641
43	South Dakota	0.8484
44	Tennessee	0.7888
45	Texas	0.8007
46	Utah	0.8126
47	Vermont	0.9840
48	Virgin Islands	0.7026
49	Virginia	0.8012
50	Washington	1.0458
51	West Virginia	0.7725
52	Wisconsin	0.9480
53	Wyoming	0.9214

TABLE 9.—PROPOSED WAGE INDEX BASED ON CBSA LABOR MARKET AREAS FOR RURAL AREAS—Continued

CBSA Code	Nonurban Area	Wage Index
65	Guam	0.9611

[2] All counties within the State are classified as urban, with the exception of Massachusetts and Puerto Rico. Massachusetts and Puerto Rico have areas designated as rural, however, no short-term, acute care hospitals are located in the area(s) for FY 2006. Because more recent data is not available for those areas, we are using last year's wage index value.

TABLE A.—MSA/CBSA CROSSWALK

SSA State/County Code	County and State Name	MSA Number	2006 MSA-based WI	2006 CBSA-based WI	CBSA Number
01000	Autauga County, Alabama	5240	0.8588	0.8588	33860
01010	Baldwin County, Alabama	5160	0.7866	0.7477	99901
01020	Barbour County, Alabama	01	0.7463	0.7477	99901
01030	Bibb County, Alabama	01	0.7463	0.8979	13820
01040	Blount County, Alabama	1000	0.9021	0.8979	13820
01050	Bullock County, Alabama	01	0.7463	0.7477	99901
01060	Butler County, Alabama	01	0.7463	0.7477	99901
01070	Calhoun County, Alabama	0450	0.7659	0.7659	11500
01080	Chambers County, Alabama	01	0.7463	0.7477	99901
01090	Cherokee County, Alabama	01	0.7463	0.7477	99901
01100	Chilton County, Alabama	01	0.7463	0.8979	13820
01110	Choctaw County, Alabama	01	0.7463	0.7477	99901
01120	Clarke County, Alabama	01	0.7463	0.7477	99901
01130	Clay County, Alabama	01	0.7463	0.7477	99901
01140	Cleburne County, Alabama	01	0.7463	0.7477	99901
01150	Coffee County, Alabama	01	0.7463	0.7477	99901
01160	Colbert County, Alabama	2650	0.8280	0.8280	22520
01170	Conecuh County, Alabama	01	0.7463	0.7477	99901
01180	Coosa County, Alabama	01	0.7463	0.7477	99901
01190	Covington County, Alabama	01	0.7463	0.7477	99901
01200	Crenshaw County, Alabama	01	0.7463	0.7477	99901
01210	Cullman County, Alabama	01	0.7463	0.7477	99901
01220	Dale County, Alabama	2180	0.7687	0.7477	99901
01230	Dallas County, Alabama	01	0.7463	0.7477	99901
01240	De Kalb County, Alabama	01	0.7463	0.7477	99901
01250	Elmore County, Alabama	5240	0.8588	0.8588	33860
01260	Escambia County, Alabama	01	0.7463	0.7477	99901
01270	Etowah County, Alabama	2880	0.7946	0.7946	23460
01280	Fayette County, Alabama	01	0.7463	0.7477	99901
01290	Franklin County, Alabama	01	0.7463	0.7477	99901
01300	Geneva County, Alabama	01	0.7463	0.7707	20020
01310	Greene County, Alabama	01	0.7463	0.8721	46220
01320	Hale County, Alabama	01	0.7463	0.8721	46220
01330	Henry County, Alabama	01	0.7463	0.7707	20020
01340	Houston County, Alabama	2180	0.7687	0.7707	20020
01350	Jackson County, Alabama	01	0.7463	0.7477	99901
01360	Jefferson County, Alabama	1000	0.9021	0.8979	13820
01370	Lamar County, Alabama	01	0.7463	0.7477	99901
01380	Lauderdale County, Alabama	2650	0.8280	0.8280	22520
01390	Lawrence County, Alabama	2030	0.8478	0.8478	19460
01400	Lee County, Alabama	0580	0.8108	0.8108	12220
01410	Limestone County, Alabama	3440	0.9149	0.9149	26620
01420	Lowndes County, Alabama	01	0.7463	0.8588	33860
01430	Macon County, Alabama	01	0.7463	0.7477	99901
01440	Madison County, Alabama	3440	0.9149	0.9149	26620
01450	Marengo County, Alabama	01	0.7463	0.7477	99901
01460	Marion County, Alabama	01	0.7463	0.7477	99901
01470	Marshall County, Alabama	01	0.7463	0.7477	99901
01480	Mobile County, Alabama	5160	0.7866	0.7895	33660
01490	Monroe County, Alabama	01	0.7463	0.7477	99901
01500	Montgomery County, Alabama	5240	0.8588	0.8588	33860

TABLE A.—MSA/CBSA CROSSWALK—Continued

SSA State/ County Code	County and State Name	MSA Number	2006 MSA-based WI	2006 CBSA-based WI	CBSA Number
01510	Morgan County, Alabama	2030	0.8478	0.8478	19460
01520	Perry County, Alabama	01	0.7463	0.7477	99901
01530	Pickens County, Alabama	01	0.7463	0.7477	99901
01540	Pike County, Alabama	01	0.7463	0.7477	99901
01550	Randolph County, Alabama	01	0.7463	0.7477	99901
01560	Russell County, Alabama	1800	0.8568	0.8568	17980
01570	St Clair County, Alabama	1000	0.9021	0.8979	13820
01580	Shelby County, Alabama	1000	0.9021	0.8979	13820
01590	Sumter County, Alabama	01	0.7463	0.7477	99901
01600	Talladega County, Alabama	01	0.7463	0.7477	99901
01610	Tallapoosa County, Alabama	01	0.7463	0.7477	99901
01620	Tuscaloosa County, Alabama	8600	0.8842	0.8721	46220
01630	Walker County, Alabama	01	0.7463	0.8979	13820
01640	Washington County, Alabama	01	0.7463	0.7477	99901
01650	Wilcox County, Alabama	01	0.7463	0.7477	99901
01660	Winston County, Alabama	01	0.7463	0.7477	99901
02013	Aleutians County East, Alaska	02	1.1900	1.1990	99902
02016	Aleutians County West, Alaska	02	1.1900	1.1990	99902
02020	Anchorage County, Alaska	0380	1.2022	1.2110	11260
02030	Angoon County, Alaska	02	1.1900	1.1990	99902
02040	Barrow-North Slope County, Alaska	02	1.1900	1.1990	99902
02050	Bethel County, Alaska	02	1.1900	1.1990	99902
02060	Bristol Bay Borough County, Alaska	02	1.1900	1.1990	99902
02068	Denali County, Alaska	02	1.1900	1.1990	99902
02070	Bristol Bay County, Alaska	02	1.1900	1.1990	99902
02080	Cordova-Mc Carthy County, Alaska	02	1.1900	1.1990	99902
02090	Fairbanks County, Alaska	02	1.1900	1.1419	21820
02100	Haines County, Alaska	02	1.1900	1.1990	99902
02110	Juneau County, Alaska	02	1.1900	1.1990	99902
02120	Kenai-Cook Inlet County, Alaska	02	1.1900	1.1990	99902
02122	Kenai Peninsula Borough, Alaska	02	1.1900	1.1990	99902
02130	Ketchikan County, Alaska	02	1.1900	1.1990	99902
02140	Kobuk County, Alaska	02	1.1900	1.1990	99902
02150	Kodiak County, Alaska	02	1.1900	1.1990	99902
02160	Kuskokwin County, Alaska	02	1.1900	1.1990	99902
02164	Lake and Peninsula Borough, Alaska	02	1.1900	1.1990	99902
02170	Matanuska County, Alaska	02	1.1900	1.2110	11260
02180	Nome County, Alaska	02	1.1900	1.1990	99902
02185	North Slope Borough, Alaska	02	1.1900	1.1990	99902
02188	Northwest Arctic Borough, Alaska	02	1.1900	1.1990	99902
02190	Outer Ketchikan County, Alaska	02	1.1900	1.1990	99902
02200	Prince Of Wales County, Alaska	02	1.1900	1.1990	99902
02201	Prince of Wales-Outer Ketchikan Census Area, Alaska	02	1.1900	1.1990	99902
02210	Seward County, Alaska	02	1.1900	1.1990	99902
02220	Sitka County, Alaska	02	1.1900	1.1990	99902
02230	Skagway-Yakutat County, Alaska	02	1.1900	1.1990	99902
02231	Skagway-Yakutat-Angoon Census Area, Alaska	02	1.1900	1.1990	99902
02232	Skagway-Hoonah-Angoon Census Area, Alaska	02	1.1900	1.1990	99902
02240	Southeast Fairbanks County, Alaska	02	1.1900	1.1990	99902
02250	Upper Yukon County, Alaska	02	1.1900	1.1990	99902
02260	Valdz-Chitna-Whitier County, Alaska	02	1.1900	1.1990	99902
02261	Valdex-Cordove Census Area, Alaska	02	1.1900	1.1990	99902
02270	Wade Hampton County, Alaska	02	1.1900	1.1990	99902
02280	Wrangell-Petersburg County, Alaska	02	1.1900	1.1990	99902
02282	Yakutat Borough, Alaska	02	1.1900	1.1990	99902
02290	Yukon-Koyukuk County, Alaska	02	1.1900	1.1990	99902
03000	Apache County, Arizona	03	0.9054	0.8777	99903
03010	Cochise County, Arizona	03	0.9054	0.8777	99903
03020	Coconino County, Arizona	2620	1.1857	1.2105	22380
03030	Gila County, Arizona	03	0.9054	0.8777	99903
03040	Graham County, Arizona	03	0.9054	0.8777	99903
03050	Greenlee County, Arizona	03	0.9054	0.8777	99903
03055	La Paz County, Arizona	03	0.9054	0.8777	99903
03060	Maricopa County, Arizona	6200	1.0138	1.0138	38060
03070	Mohave County, Arizona	4120	1.1166	0.8777	99903
03080	Navajo County, Arizona	03	0.9054	0.8777	99903
03090	Pima County, Arizona	8520	0.8987	0.8987	46060
03100	Pinal County, Arizona	6200	1.0138	1.0138	38060
03110	Santa Cruz County, Arizona	03	0.9054	0.8777	99903

TABLE A.—MSA/CBSA CROSSWALK—Continued

SSA State/ County Code	County and State Name	MSA Number	2006 MSA-based WI	2006 CBSA-based WI	CBSA Number
03120	Yavapai County, Arizona	03	0.9054	0.9879	39140
03130	Yuma County, Arizona	9360	0.9135	0.9135	49740
04000	Arkansas County, Arkansas	04	0.7744	0.7451	99904
04010	Ashley County, Arkansas	04	0.7744	0.7451	99904
04020	Baxter County, Arkansas	04	0.7744	0.7451	99904
04030	Benton County, Arkansas	2580	0.8563	0.8563	22220
04040	Boone County, Arkansas	04	0.7744	0.7451	99904
04050	Bradley County, Arkansas	04	0.7744	0.7451	99904
04060	Calhoun County, Arkansas	04	0.7744	0.7451	99904
04070	Carroll County, Arkansas	04	0.7744	0.7451	99904
04080	Chicot County, Arkansas	04	0.7744	0.7451	99904
04090	Clark County, Arkansas	04	0.7744	0.7451	99904
04100	Clay County, Arkansas	04	0.7744	0.7451	99904
04110	Cleburne County, Arkansas	04	0.7744	0.7451	99904
04120	Cleveland County, Arkansas	04	0.7744	0.8689	38220
04130	Columbia County, Arkansas	04	0.7744	0.7451	99904
04140	Conway County, Arkansas	04	0.7744	0.7451	99904
04150	Craighead County, Arkansas	3700	0.7919	0.7919	27860
04160	Crawford County, Arkansas	2720	0.8229	0.8214	22900
04170	Crittenden County, Arkansas	4920	0.9360	0.9341	32820
04180	Cross County, Arkansas	04	0.7744	0.7451	99904
04190	Dallas County, Arkansas	04	0.7744	0.7451	99904
04200	Desha County, Arkansas	04	0.7744	0.7451	99904
04210	Drew County, Arkansas	04	0.7744	0.7451	99904
04220	Faulkner County, Arkansas	4400	0.8756	0.8756	30780
04230	Franklin County, Arkansas	04	0.7744	0.8214	22900
04240	Fulton County, Arkansas	04	0.7744	0.7451	99904
04250	Garland County, Arkansas	04	0.7744	0.9053	26300
04260	Grant County, Arkansas	04	0.7744	0.8756	30780
04270	Greene County, Arkansas	04	0.7744	0.7451	99904
04280	Hempstead County, Arkansas	04	0.7744	0.7451	99904
04290	Hot Spring County, Arkansas	04	0.7744	0.7451	99904
04300	Howard County, Arkansas	04	0.7744	0.7451	99904
04310	Independence County, Arkansas	04	0.7744	0.7451	99904
04320	Izard County, Arkansas	04	0.7744	0.7451	99904
04330	Jackson County, Arkansas	04	0.7744	0.7451	99904
04340	Jefferson County, Arkansas	6240	0.8689	0.8689	38220
04350	Johnson County, Arkansas	04	0.7744	0.7451	99904
04360	Lafayette County, Arkansas	04	0.7744	0.7451	99904
04370	Lawrence County, Arkansas	04	0.7744	0.7451	99904
04380	Lee County, Arkansas	04	0.7744	0.7451	99904
04390	Lincoln County, Arkansas	04	0.7744	0.8689	38220
04400	Little River County, Arkansas	04	0.7744	0.7451	99904
04410	Logan County, Arkansas	04	0.7744	0.7451	99904
04420	Lonoke County, Arkansas	4400	0.8756	0.8756	30780
04430	Madison County, Arkansas	04	0.7744	0.8563	22220
04440	Marion County, Arkansas	04	0.7744	0.7451	99904
04450	Miller County, Arkansas	8360	0.8291	0.8291	45500
04460	Mississippi County, Arkansas	04	0.7744	0.7451	99904
04470	Monroe County, Arkansas	04	0.7744	0.7451	99904
04480	Montgomery County, Arkansas	04	0.7744	0.7451	99904
04490	Nevada County, Arkansas	04	0.7744	0.7451	99904
04500	Newton County, Arkansas	04	0.7744	0.7451	99904
04510	Ouachita County, Arkansas	04	0.7744	0.7451	99904
04520	Perry County, Arkansas	04	0.7744	0.8756	30780
04530	Phillips County, Arkansas	04	0.7744	0.7451	99904
04540	Pike County, Arkansas	04	0.7744	0.7451	99904
04550	Poinsett County, Arkansas	04	0.7744	0.7919	27860
04560	Polk County, Arkansas	04	0.7744	0.7451	99904
04570	Pope County, Arkansas	04	0.7744	0.7451	99904
04580	Prairie County, Arkansas	04	0.7744	0.7451	99904
04590	Pulaski County, Arkansas	4400	0.8756	0.8756	30780
04600	Randolph County, Arkansas	04	0.7744	0.7451	99904
04610	St Francis County, Arkansas	04	0.7744	0.7451	99904
04620	Saline County, Arkansas	4400	0.8756	0.8756	30780
04630	Scott County, Arkansas	04	0.7744	0.7451	99904
04640	Searcy County, Arkansas	04	0.7744	0.7451	99904
04650	Sebastian County, Arkansas	2720	0.8229	0.8214	22900
04660	Sevier County, Arkansas	04	0.7744	0.7451	99904

TABLE A.—MSA/CBSA CROSSWALK—Continued

SSA State/ County Code	County and State Name	MSA Number	2006 MSA-based WI	2006 CBSA-based WI	CBSA Number
04670	Sharp County, Arkansas	04	0.7744	0.7451	99904
04680	Stone County, Arkansas	04	0.7744	0.7451	99904
04690	Union County, Arkansas	04	0.7744	0.7451	99904
04700	Van Buren County, Arkansas	04	0.7744	0.7451	99904
04710	Washington County, Arkansas	2580	0.8563	0.8563	22220
04720	White County, Arkansas	04	0.7744	0.7451	99904
04730	Woodruff County, Arkansas	04	0.7744	0.7451	99904
04740	Yell County, Arkansas	04	0.7744	0.7451	99904
05000	Alameda County, California	5775	1.5346	1.5346	36084
05010	Alpine County, California	05	1.0639	1.0857	99905
05020	Amador County, California	05	1.0639	1.0857	99905
05030	Butte County, California	1620	1.0522	1.0522	17020
05040	Calaveras County, California	05	1.0639	1.0857	99905
05050	Colusa County, California	05	1.0639	1.0857	99905
05060	Contra Costa County, California	5775	1.5346	1.5346	36084
05070	Del Norte County, California	05	1.0639	1.0857	99905
05080	Eldorado County, California	6920	1.3148	1.2973	40900
05090	Fresno County, California	2840	1.0432	1.0541	23420
05100	Glenn County, California	05	1.0639	1.0857	99905
05110	Humboldt County, California	05	1.0639	1.0857	99905
05120	Imperial County, California	05	1.0639	0.8915	20940
05130	Inyo County, California	05	1.0639	1.0857	99905
05140	Kern County, California	0680	1.0344	1.0344	12540
05150	Kings County, California	05	1.0639	1.0046	25260
05160	Lake County, California	05	1.0639	1.0857	99905
05170	Lassen County, California	05	1.0639	1.0857	99905
05200	Los Angeles County, California	4480	1.1752	1.1752	31084
05210	Los Angeles County, California	4480	1.1752	1.1752	31084
05300	Madera County, California	2840	1.0432	0.8721	31460
05310	Marin County, California	7360	1.4990	1.4990	41884
05320	Mariposa County, California	05	1.0639	1.0857	99905
05330	Mendocino County, California	05	1.0639	1.0857	99905
05340	Merced County, California	4940	1.1120	1.1120	32900
05350	Modoc County, California	05	1.0639	1.0857	99905
05360	Mono County, California	05	1.0639	1.0857	99905
05370	Monterey County, California	7120	1.4142	1.4142	41500
05380	Napa County, California	8720	1.3966	1.2656	34900
05390	Nevada County, California	05	1.0639	1.0857	99905
05400	Orange County, California	5945	1.1576	1.1576	42044
05410	Placer County, California	6920	1.3148	1.2973	40900
05420	Plumas County, California	05	1.0639	1.0857	99905
05430	Riverside County, California	6780	1.1022	1.1022	40140
05440	Sacramento County, California	6920	1.3148	1.2973	40900
05450	San Benito County, California	05	1.0639	1.5125	41940
05460	San Bernardino County, California	6780	1.1022	1.1022	40140
05470	San Diego County, California	7320	1.1424	1.1424	41740
05480	San Francisco County, California	7360	1.4990	1.4990	41884
05490	San Joaquin County, California	8120	1.1311	1.1311	44700
05500	San Luis Obispo County, California	7460	1.1360	1.1360	42020
05510	San Mateo County, California	7360	1.4990	1.4990	41884
05520	Santa Barbara County, California	7480	1.1538	1.1538	42060
05530	Santa Clara County, California	7400	1.5144	1.5125	41940
05540	Santa Cruz County, California	7485	1.5182	1.5182	42100
05550	Shasta County, California	6690	1.2215	1.2215	39820
05560	Sierra County, California	05	1.0639	1.0857	99905
05570	Siskiyou County, California	05	1.0639	1.0857	99905
05580	Solano County, California	8720	1.3966	1.4899	46700
05590	Sonoma County, California	7500	1.3506	1.3506	42220
05600	Stanislaus County, California	5170	1.1804	1.1804	33700
05610	Sutter County, California	9340	1.0932	1.0932	49700
05620	Tehama County, California	05	1.0639	1.0857	99905
05630	Trinity County, California	05	1.0639	1.0857	99905
05640	Tulare County, California	8780	1.0074	1.0074	47300
05650	Tuolumne County, California	05	1.0639	1.0857	99905
05660	Ventura County, California	8735	1.1613	1.1613	37100
05670	Yolo County, California	9270	0.9949	1.2973	40900
05680	Yuba County, California	9340	1.0932	1.0932	49700
06000	Adams County, Colorado	2080	1.0733	1.0733	19740
06010	Alamosa County, Colorado	06	0.9389	0.9389	99906

TABLE A.—MSA/CBSA CROSSWALK—Continued

SSA State/ County Code	County and State Name	MSA Number	2006 MSA-based WI	2006 CBSA-based WI	CBSA Number
06020	Arapahoe County, Colorado	2080	1.0733	1.0733	19740
06030	Archuleta County, Colorado	06	0.9389	0.9389	99906
06040	Baca County, Colorado	06	0.9389	0.9389	99906
06050	Bent County, Colorado	06	0.9389	0.9389	99906
06060	Boulder County, Colorado	1125	0.9744	0.9744	14500
06070	Chaffee County, Colorado	06	0.9389	0.9389	99906
06080	Cheyenne County, Colorado	06	0.9389	0.9389	99906
06090	Clear Creek County, Colorado	06	0.9389	1.0733	19740
06100	Conejos County, Colorado	06	0.9389	0.9389	99906
06110	Costilla County, Colorado	06	0.9389	0.9389	99906
06120	Crowley County, Colorado	06	0.9389	0.9389	99906
06130	Custer County, Colorado	06	0.9389	0.9389	99906
06140	Delta County, Colorado	06	0.9389	0.9389	99906
06150	Denver County, Colorado	2080	1.0733	1.0733	19740
06160	Dolores County, Colorado	06	0.9389	0.9389	99906
06170	Douglas County, Colorado	2080	1.0733	1.0733	19740
06180	Eagle County, Colorado	06	0.9389	0.9389	99906
06190	Elbert County, Colorado	06	0.9389	1.0733	19740
06200	El Paso County, Colorado	1720	0.9478	0.9478	17820
06210	Fremont County, Colorado	06	0.9389	0.9389	99906
06220	Garfield County, Colorado	06	0.9389	0.9389	99906
06230	Gilpin County, Colorado	06	0.9389	1.0733	19740
06240	Grand County, Colorado	06	0.9389	0.9389	99906
06250	Gunnison County, Colorado	06	0.9389	0.9389	99906
06260	Hinsdale County, Colorado	06	0.9389	0.9389	99906
06270	Huerfano County, Colorado	06	0.9389	0.9389	99906
06280	Jackson County, Colorado	06	0.9389	0.9389	99906
06290	Jefferson County, Colorado	2080	1.0733	1.0733	19740
06300	Kiowa County, Colorado	06	0.9389	0.9389	99906
06310	Kit Carson County, Colorado	06	0.9389	0.9389	99906
06320	Lake County, Colorado	06	0.9389	0.9389	99906
06330	La Plata County, Colorado	06	0.9389	0.9389	99906
06340	Larimer County, Colorado	2670	1.0132	1.0132	22660
06350	Las Animas County, Colorado	06	0.9389	0.9389	99906
06360	Lincoln County, Colorado	06	0.9389	0.9389	99906
06370	Logan County, Colorado	06	0.9389	0.9389	99906
06380	Mesa County, Colorado	2995	0.9560	0.9560	24300
06390	Mineral County, Colorado	06	0.9389	0.9389	99906
06400	Moffat County, Colorado	06	0.9389	0.9389	99906
06410	Montezuma County, Colorado	06	0.9389	0.9389	99906
06420	Montrose County, Colorado	06	0.9389	0.9389	99906
06430	Morgan County, Colorado	06	0.9389	0.9389	99906
06440	Otero County, Colorado	06	0.9389	0.9389	99906
06450	Ouray County, Colorado	06	0.9389	0.9389	99906
06460	Park County, Colorado	06	0.9389	1.0733	19740
06470	Phillips County, Colorado	06	0.9389	0.9389	99906
06480	Pitkin County, Colorado	06	0.9389	0.9389	99906
06490	Prowers County, Colorado	06	0.9389	0.9389	99906
06500	Pueblo County, Colorado	6560	0.8632	0.8632	39380
06510	Rio Blanco County, Colorado	06	0.9389	0.9389	99906
06520	Rio Grande County, Colorado	06	0.9389	0.9389	99906
06530	Routt County, Colorado	06	0.9389	0.9389	99906
06540	Saguache County, Colorado	06	0.9389	0.9389	99906
06550	San Juan County, Colorado	06	0.9389	0.9389	99906
06560	San Miguel County, Colorado	06	0.9389	0.9389	99906
06570	Sedgwick County, Colorado	06	0.9389	0.9389	99906
06580	Summit County, Colorado	06	0.9389	0.9389	99906
06590	Teller County, Colorado	06	0.9389	0.9478	17820
06600	Washington County, Colorado	06	0.9389	0.9389	99906
06610	Weld County, Colorado	3060	0.9580	0.9580	24540
06620	Yuma County, Colorado	06	0.9389	0.9389	99906
06630	Broomfield County, Colorado	2080	1.0733	1.0733	19740
07000	Fairfield County, Connecticut	5483	1.2096	1.2598	14860
07010	Hartford County, Connecticut	3283	1.1084	1.1084	25540
07020	Litchfield County, Connecticut	3283	1.1084	1.1084	25540
07030	Middlesex County, Connecticut	3283	1.1084	1.1084	25540
07040	New Haven County, Connecticut	5483	1.2096	1.1702	35300
07050	New London County, Connecticut	5523	1.1356	1.1356	35980
07060	Tolland County, Connecticut	3283	1.1084	1.1084	25540

TABLE A.—MSA/CBSA CROSSWALK—Continued

SSA State/ County Code	County and State Name	MSA Number	2006 MSA-based WI	2006 CBSA-based WI	CBSA Number
07070	Windham County, Connecticut	07	1.1794	1.1794	99907
08000	Kent County, Delaware	2190	0.9779	0.9779	20100
08010	New Castle County, Delaware	9160	1.0537	1.0482	48864
08020	Sussex County, Delaware	08	0.9606	0.9606	99908
09000	Washington Dc County, Dist Of Col	8840	1.0983	1.0932	47894
10000	Alachua County, Florida	2900	0.9474	0.9474	23540
10010	Baker County, Florida	10	0.8698	0.9299	27260
10020	Bay County, Florida	6015	0.7989	0.7989	37460
10030	Bradford County, Florida	10	0.8698	0.8598	99910
10040	Brevard County, Florida	4900	0.9835	0.9835	37340
10050	Broward County, Florida	2680	1.0442	1.0442	22744
10060	Calhoun County, Florida	10	0.8698	0.8598	99910
10070	Charlotte County, Florida	6580	0.9264	0.9264	39460
10080	Citrus County, Florida	10	0.8698	0.8598	99910
10090	Clay County, Florida	3600	0.9308	0.9299	27260
10100	Collier County, Florida	5345	1.0140	1.0140	34940
10110	Columbia County, Florida	10	0.8698	0.8598	99910
10120	Dade County, Florida	5000	0.9759	0.9759	33124
10130	De Soto County, Florida	10	0.8698	0.8598	99910
10140	Dixie County, Florida	10	0.8698	0.8598	99910
10150	Duval County, Florida	3600	0.9308	0.9299	27260
10160	Escambia County, Florida	6080	0.8104	0.8104	37860
10170	Flagler County, Florida	2020	0.9334	0.8598	99910
10180	Franklin County, Florida	10	0.8698	0.8598	99910
10190	Gadsden County, Florida	8240	0.8697	0.8697	45220
10200	Gilchrist County, Florida	10	0.8698	0.9474	23540
10210	Glades County, Florida	10	0.8698	0.8598	99910
10220	Gulf County, Florida	10	0.8698	0.8598	99910
10230	Hamilton County, Florida	10	0.8698	0.8598	99910
10240	Hardee County, Florida	10	0.8698	0.8598	99910
10250	Hendry County, Florida	10	0.8698	0.8598	99910
10260	Hernando County, Florida	8280	0.9193	0.9193	45300
10270	Highlands County, Florida	10	0.8698	0.8598	99910
10280	Hillsborough County, Florida	8280	0.9193	0.9193	45300
10290	Holmes County, Florida	10	0.8698	0.8598	99910
10300	Indian River County, Florida	10	0.8698	0.9444	46940
10310	Jackson County, Florida	10	0.8698	0.8598	99910
10320	Jefferson County, Florida	10	0.8698	0.8697	45220
10330	Lafayette County, Florida	10	0.8698	0.8598	99910
10340	Lake County, Florida	5960	0.9459	0.9459	36740
10350	Lee County, Florida	2700	0.9366	0.9366	15980
10360	Leon County, Florida	8240	0.8697	0.8697	45220
10370	Levy County, Florida	10	0.8698	0.8598	99910
10380	Liberty County, Florida	10	0.8698	0.8598	99910
10390	Madison County, Florida	10	0.8698	0.8598	99910
10400	Manatee County, Florida	7510	0.9555	0.9555	42260
10410	Marion County, Florida	5790	0.8934	0.8934	36100
10420	Martin County, Florida	2710	1.0133	1.0133	38940
10430	Monroe County, Florida	10	0.8698	0.8598	99910
10440	Nassau County, Florida	3600	0.9308	0.9299	27260
10450	Okaloosa County, Florida	2750	0.8881	0.8881	23020
10460	Okeechobee County, Florida	10	0.8698	0.8598	99910
10470	Orange County, Florida	5960	0.9459	0.9459	36740
10480	Osceola County, Florida	5960	0.9459	0.9459	36740
10490	Palm Beach County, Florida	8960	1.0077	1.0077	48424
10500	Pasco County, Florida	8280	0.9193	0.9193	45300
10510	Pinellas County, Florida	8280	0.9193	0.9193	45300
10520	Polk County, Florida	3980	0.8921	0.8921	29460
10530	Putnam County, Florida	10	0.8698	0.8598	99910
10540	Johns County, Florida	3600	0.9308	0.9299	27260
10550	St Lucie County, Florida	2710	1.0133	1.0133	38940
10560	Santa Rosa County, Florida	6080	0.8104	0.8104	37860
10570	Sarasota County, Florida	7510	0.9555	0.9555	42260
10580	Seminole County, Florida	5960	0.9459	0.9459	36740
10590	Sumter County, Florida	10	0.8698	0.8598	99910
10600	Suwannee County, Florida	10	0.8698	0.8598	99910
10610	Taylor County, Florida	10	0.8698	0.8598	99910
10620	Union County, Florida	10	0.8698	0.8598	99910
10630	Volusia County, Florida	2020	0.9334	0.9308	19660

TABLE A.—MSA/CBSA CROSSWALK—Continued

SSA State/ County Code	County and State Name	MSA Number	2006 MSA-based WI	2006 CBSA-based WI	CBSA Number
10640	Wakulla County, Florida	10	0.8698	0.8697	45220
10650	Walton County, Florida	10	0.8698	0.8598	99910
10660	Washington County, Florida	10	0.8698	0.8598	99910
11000	Appling County, Georgia	11	0.8165	0.7666	99911
11010	Atkinson County, Georgia	11	0.8165	0.7666	99911
11011	Bacon County, Georgia	11	0.8165	0.7666	99911
11020	Baker County, Georgia	11	0.8165	0.8636	10500
11030	Baldwin County, Georgia	11	0.8165	0.7666	99911
11040	Banks County, Georgia	11	0.8165	0.7666	99911
11050	Barrow County, Georgia	0520	0.9648	0.9648	12060
11060	Bartow County, Georgia	0520	0.9648	0.9648	12060
11070	Ben Hill County, Georgia	11	0.8165	0.7666	99911
11080	Berrien County, Georgia	11	0.8165	0.7666	99911
11090	Bibb County, Georgia	4680	0.9286	0.9453	31420
11100	Bleckley County, Georgia	11	0.8165	0.7666	99911
11110	Brantley County, Georgia	11	0.8165	0.9320	15260
11120	Brooks County, Georgia	11	0.8165	0.8875	46660
11130	Bryan County, Georgia	7520	0.9480	0.9480	42340
11140	Bulloch County, Georgia	11	0.8165	0.7666	99911
11150	Burke County, Georgia	11	0.8165	0.9565	12260
11160	Butts County, Georgia	11	0.8165	0.9648	12060
11161	Calhoun County, Georgia	11	0.8165	0.7666	99911
11170	Camden County, Georgia	11	0.8165	0.7666	99911
11180	Candler County, Georgia	11	0.8165	0.7666	99911
11190	Carroll County, Georgia	0520	0.9648	0.9648	12060
11200	Catoosa County, Georgia	1560	0.9098	0.9098	16860
11210	Charlton County, Georgia	11	0.8165	0.7666	99911
11220	Chatham County, Georgia	7520	0.9480	0.9480	42340
11230	Chattahoochee County, Georgia	1800	0.8568	0.8568	17980
11240	Chattooga County, Georgia	11	0.8165	0.7666	99911
11250	Cherokee County, Georgia	0520	0.9648	0.9648	12060
11260	Clarke County, Georgia	0500	0.9843	0.9843	12020
11270	Clay County, Georgia	11	0.8165	0.7666	99911
11280	Clayton County, Georgia	0520	0.9648	0.9648	12060
11281	Clinch County, Georgia	11	0.8165	0.7666	99911
11290	Cobb County, Georgia	0520	0.9648	0.9648	12060
11291	Coffee County, Georgia	11	0.8165	0.7666	99911
11300	Colquitt County, Georgia	11	0.8165	0.7666	99911
11310	Columbia County, Georgia	0600	0.9619	0.9565	12260
11311	Cook County, Georgia	11	0.8165	0.7666	99911
11320	Coweta County, Georgia	0520	0.9648	0.9648	12060
11330	Crawford County, Georgia	11	0.8165	0.9453	31420
11340	Crisp County, Georgia	11	0.8165	0.7666	99911
11341	Dade County, Georgia	1560	0.9098	0.9098	16860
11350	Dawson County, Georgia	11	0.8165	0.9648	12060
11360	Decatur County, Georgia	11	0.8165	0.7666	99911
11370	De Kalb County, Georgia	0520	0.9648	0.9648	12060
11380	Dodge County, Georgia	11	0.8165	0.7666	99911
11381	Dooly County, Georgia	11	0.8165	0.7666	99911
11390	Dougherty County, Georgia	0120	0.8636	0.8636	10500
11400	Douglas County, Georgia	0520	0.9648	0.9648	12060
11410	Early County, Georgia	11	0.8165	0.7666	99911
11420	Echols County, Georgia	11	0.8165	0.8875	46660
11421	Effingham County, Georgia	7520	0.9480	0.9480	42340
11430	Elbert County, Georgia	11	0.8165	0.7666	99911
11440	Emanuel County, Georgia	11	0.8165	0.7666	99911
11441	Evans County, Georgia	11	0.8165	0.7666	99911
11450	Fannin County, Georgia	11	0.8165	0.7666	99911
11451	Fayette County, Georgia	0520	0.9648	0.9648	12060
11460	Floyd County, Georgia	11	0.8165	0.9424	40660
11461	Forsyth County, Georgia	0520	0.9648	0.9648	12060
11462	Franklin County, Georgia	11	0.8165	0.7666	99911
11470	Fulton County, Georgia	0520	0.9648	0.9648	12060
11471	Gilmer County, Georgia	11	0.8165	0.7666	99911
11480	Glascock County, Georgia	11	0.8165	0.7666	99911
11490	Glynn County, Georgia	11	0.8165	0.9320	15260
11500	Gordon County, Georgia	11	0.8165	0.7666	99911
11510	Grady County, Georgia	11	0.8165	0.7666	99911
11520	Greene County, Georgia	11	0.8165	0.7666	99911

TABLE A.—MSA/CBSA CROSSWALK—Continued

SSA State/ County Code	County and State Name	MSA Number	2006 MSA-based WI	2006 CBSA-based WI	CBSA Number
11530	Gwinnett County, Georgia	0520	0.9648	0.9648	12060
11540	Habersham County, Georgia	11	0.8165	0.7666	99911
11550	Hall County, Georgia	11	0.8165	0.8883	23580
11560	Hancock County, Georgia	11	0.8165	0.7666	99911
11570	Haralson County, Georgia	11	0.8165	0.9648	12060
11580	Harris County, Georgia	1800	0.8568	0.8568	17980
11581	Hart County, Georgia	11	0.8165	0.7666	99911
11590	Heard County, Georgia	11	0.8165	0.9648	12060
11591	Henry County, Georgia	0520	0.9648	0.9648	12060
11600	Houston County, Georgia	4680	0.9286	0.8654	47580
11601	Irwin County, Georgia	11	0.8165	0.7666	99911
11610	Jackson County, Georgia	11	0.8165	0.7666	99911
11611	Jasper County, Georgia	11	0.8165	0.9648	12060
11612	Jeff Davis County, Georgia	11	0.8165	0.7666	99911
11620	Jefferson County, Georgia	11	0.8165	0.7666	99911
11630	Jenkins County, Georgia	11	0.8165	0.7666	99911
11640	Johnson County, Georgia	11	0.8165	0.7666	99911
11650	Jones County, Georgia	4680	0.9286	0.9453	31420
11651	Lamar County, Georgia	11	0.8165	0.9648	12060
11652	Lanier County, Georgia	11	0.8165	0.8875	46660
11660	Laurens County, Georgia	11	0.8165	0.7666	99911
11670	Lee County, Georgia	0120	0.8636	0.8636	10500
11680	Liberty County, Georgia	11	0.8165	0.9178	25980
11690	Lincoln County, Georgia	11	0.8165	0.7666	99911
11691	Long County, Georgia	11	0.8165	0.9178	25980
11700	Lowndes County, Georgia	11	0.8165	0.8875	46660
11701	Lumpkin County, Georgia	11	0.8165	0.7666	99911
11702	Mc Duffie County, Georgia	0600	0.9619	0.9565	12260
11703	Mc Intosh County, Georgia	11	0.8165	0.9320	15260
11710	Macon County, Georgia	11	0.8165	0.7666	99911
11720	Madison County, Georgia	0500	0.9843	0.9843	12020
11730	Marion County, Georgia	11	0.8165	0.8568	17980
11740	Meriwether County, Georgia	11	0.8165	0.9648	12060
11741	Miller County, Georgia	11	0.8165	0.7666	99911
11750	Mitchell County, Georgia	11	0.8165	0.7666	99911
11760	Monroe County, Georgia	11	0.8165	0.9453	31420
11770	Montgomery County, Georgia	11	0.8165	0.7666	99911
11771	Morgan County, Georgia	11	0.8165	0.7666	99911
11772	Murray County, Georgia	11	0.8165	0.9044	19140
11780	Muscogee County, Georgia	1800	0.8568	0.8568	17980
11790	Newton County, Georgia	0520	0.9648	0.9648	12060
11800	Oconee County, Georgia	0500	0.9843	0.9843	12020
11801	Oglethorpe County, Georgia	11	0.8165	0.9843	12020
11810	Paulding County, Georgia	0520	0.9648	0.9648	12060
11811	Peach County, Georgia	4680	0.9286	0.7666	99911
11812	Pickens County, Georgia	0520	0.9648	0.9648	12060
11820	Pierce County, Georgia	11	0.8165	0.7666	99911
11821	Pike County, Georgia	11	0.8165	0.9648	12060
11830	Polk County, Georgia	11	0.8165	0.7666	99911
11831	Pulaski County, Georgia	11	0.8165	0.7666	99911
11832	Putnam County, Georgia	11	0.8165	0.7666	99911
11833	Quitman County, Georgia	11	0.8165	0.7666	99911
11834	Rabun County, Georgia	11	0.8165	0.7666	99911
11835	Randolph County, Georgia	11	0.8165	0.7666	99911
11840	Richmond County, Georgia	0600	0.9619	0.9565	12260
11841	Rockdale County, Georgia	0520	0.9648	0.9648	12060
11842	Schley County, Georgia	11	0.8165	0.7666	99911
11850	Screven County, Georgia	11	0.8165	0.7666	99911
11851	Seminole County, Georgia	11	0.8165	0.7666	99911
11860	Spalding County, Georgia	0520	0.9648	0.9648	12060
11861	Stephens County, Georgia	11	0.8165	0.7666	99911
11862	Stewart County, Georgia	11	0.8165	0.7666	99911
11870	Sumter County, Georgia	11	0.8165	0.7666	99911
11880	Talbot County, Georgia	11	0.8165	0.7666	99911
11881	Taliaferro County, Georgia	11	0.8165	0.7666	99911
11882	Tattnall County, Georgia	11	0.8165	0.7666	99911
11883	Taylor County, Georgia	11	0.8165	0.7666	99911
11884	Telfair County, Georgia	11	0.8165	0.7666	99911
11885	Terrell County, Georgia	11	0.8165	0.8636	10500

TABLE A.—MSA/CBSA CROSSWALK—Continued

SSA State/ County Code	County and State Name	MSA Number	2006 MSA-based WI	2006 CBSA-based WI	CBSA Number
11890	Thomas County, Georgia	11	0.8165	0.7666	99911
11900	Tift County, Georgia	11	0.8165	0.7666	99911
11901	Toombs County, Georgia	11	0.8165	0.7666	99911
11902	Towns County, Georgia	11	0.8165	0.7666	99911
11903	Treutlen County, Georgia	11	0.8165	0.7666	99911
11910	Troup County, Georgia	11	0.8165	0.7666	99911
11911	Turner County, Georgia	11	0.8165	0.7666	99911
11912	Twiggs County, Georgia	4680	0.9286	0.9453	31420
11913	Union County, Georgia	11	0.8165	0.7666	99911
11920	Upson County, Georgia	11	0.8165	0.7666	99911
11921	Walker County, Georgia	1560	0.9098	0.9098	16860
11930	Walton County, Georgia	0520	0.9648	0.9648	12060
11940	Ware County, Georgia	11	0.8165	0.7666	99911
11941	Warren County, Georgia	11	0.8165	0.7666	99911
11950	Washington County, Georgia	11	0.8165	0.7666	99911
11960	Wayne County, Georgia	11	0.8165	0.7666	99911
11961	Webster County, Georgia	11	0.8165	0.7666	99911
11962	Wheeler County, Georgia	11	0.8165	0.7666	99911
11963	White County, Georgia	11	0.8165	0.7666	99911
11970	Whitfield County, Georgia	11	0.8165	0.9044	19140
11971	Wilcox County, Georgia	11	0.8165	0.7666	99911
11972	Wilkes County, Georgia	11	0.8165	0.7666	99911
11973	Wilkinson County, Georgia	11	0.8165	0.7666	99911
11980	Worth County, Georgia	11	0.8165	0.8636	10500
12005	Kalawao County, Hawaii	12	1.0562	1.0562	99912
12010	Hawaii County, Hawaii	12	1.0562	1.0562	99912
12020	Honolulu County, Hawaii	3320	1.1208	1.1208	26180
12040	Kauai County, Hawaii	12	1.0562	1.0562	99912
12050	Maui County, Hawaii	12	1.0562	1.0562	99912
13000	Ada County, Idaho	1080	0.9061	0.9061	14260
13010	Adams County, Idaho	13	0.9106	0.8045	99913
13020	Bannock County, Idaho	6340	0.9360	0.9360	38540
13030	Bear Lake County, Idaho	13	0.9106	0.8045	99913
13040	Benewah County, Idaho	13	0.9106	0.8045	99913
13050	Bingham County, Idaho	13	0.9106	0.8045	99913
13060	Blaine County, Idaho	13	0.9106	0.8045	99913
13070	Boise County, Idaho	13	0.9106	0.9061	14260
13080	Bonner County, Idaho	13	0.9106	0.8045	99913
13090	Bonneville County, Idaho	13	0.9106	0.9429	26820
13100	Boundary County, Idaho	13	0.9106	0.8045	99913
13110	Butte County, Idaho	13	0.9106	0.8045	99913
13120	Camas County, Idaho	13	0.9106	0.8045	99913
13130	Canyon County, Idaho	1080	0.9061	0.9061	14260
13140	Caribou County, Idaho	13	0.9106	0.8045	99913
13150	Cassia County, Idaho	13	0.9106	0.8045	99913
13160	Clark County, Idaho	13	0.9106	0.8045	99913
13170	Clearwater County, Idaho	13	0.9106	0.8045	99913
13180	Custer County, Idaho	13	0.9106	0.8045	99913
13190	Elmore County, Idaho	13	0.9106	0.8045	99913
13200	Franklin County, Idaho	13	0.9106	0.9173	30860
13210	Fremont County, Idaho	13	0.9106	0.8045	99913
13220	Gem County, Idaho	13	0.9106	0.9061	14260
13230	Gooding County, Idaho	13	0.9106	0.8045	99913
13240	Idaho County, Idaho	13	0.9106	0.8045	99913
13250	Jefferson County, Idaho	13	0.9106	0.9429	26820
13260	Jerome County, Idaho	13	0.9106	0.8045	99913
13270	Kootenai County, Idaho	13	0.9106	0.9657	17660
13280	Latah County, Idaho	13	0.9106	0.8045	99913
13290	Lemhi County, Idaho	13	0.9106	0.8045	99913
13300	Lewis County, Idaho	13	0.9106	0.8045	99913
13310	Lincoln County, Idaho	13	0.9106	0.8045	99913
13320	Madison County, Idaho	13	0.9106	0.8045	99913
13330	Minidoka County, Idaho	13	0.9106	0.8045	99913
13340	Nez Perce County, Idaho	13	0.9106	0.9896	30300
13350	Oneida County, Idaho	13	0.9106	0.8045	99913
13360	Owyhee County, Idaho	13	0.9106	0.9061	14260
13370	Payette County, Idaho	13	0.9106	0.8045	99913
13380	Power County, Idaho	13	0.9106	0.9360	38540
13390	Shoshone County, Idaho	13	0.9106	0.8045	99913

TABLE A.—MSA/CBSA CROSSWALK—Continued

SSA State/ County Code	County and State Name	MSA Number	2006 MSA-based WI	2006 CBSA-based WI	CBSA Number
13390	Teton County, Idaho	13	0.9106	0.8045	99913
13410	Twin Falls County, Idaho	13	0.9106	0.8045	99913
13420	Valley County, Idaho	13	0.9106	0.8045	99913
13430	Washington County, Idaho	13	0.9106	0.8045	99913
14000	Adams County, Illinois	14	0.8309	0.8279	99914
14010	Alexander County, Illinois	14	0.8309	0.8279	99914
14020	Bond County, Illinois	14	0.8309	0.8949	41180
14030	Boone County, Illinois	6880	0.9994	0.9994	40420
14040	Brown County, Illinois	14	0.8309	0.8279	99914
14050	Bureau County, Illinois	14	0.8309	0.8279	99914
14060	Calhoun County, Illinois	14	0.8309	0.8949	41180
14070	Carroll County, Illinois	14	0.8309	0.8279	99914
14080	Cass County, Illinois	14	0.8309	0.8279	99914
14090	Champaign County, Illinois	1400	0.9604	0.9604	16580
14100	Christian County, Illinois	14	0.8309	0.8279	99914
14110	Clark County, Illinois	14	0.8309	0.8279	99914
14120	Clay County, Illinois	14	0.8309	0.8279	99914
14130	Clinton County, Illinois	7040	0.8957	0.8949	41180
14140	Coles County, Illinois	14	0.8309	0.8279	99914
14141	Cook County, Illinois	1600	1.0838	1.0848	16974
14150	Crawford County, Illinois	14	0.8309	0.8279	99914
14160	Cumberland County, Illinois	14	0.8309	0.8279	99914
14170	De Kalb County, Illinois	1600	1.0838	1.0848	16974
14180	De Witt County, Illinois	14	0.8309	0.8279	99914
14190	Douglas County, Illinois	14	0.8309	0.8279	99914
14250	Du Page County, Illinois	1600	1.0838	1.0848	16974
14310	Edgar County, Illinois	14	0.8309	0.8279	99914
14320	Edwards County, Illinois	14	0.8309	0.8279	99914
14330	Effingham County, Illinois	14	0.8309	0.8279	99914
14340	Fayette County, Illinois	14	0.8309	0.8279	99914
14350	Ford County, Illinois	14	0.8309	0.9604	16580
14360	Franklin County, Illinois	14	0.8309	0.8279	99914
14370	Fulton County, Illinois	14	0.8309	0.8279	99914
14380	Gallatin County, Illinois	14	0.8309	0.8279	99914
14390	Greene County, Illinois	14	0.8309	0.8279	99914
14400	Grundy County, Illinois	1600	1.0838	1.0848	16974
14410	Hamilton County, Illinois	14	0.8309	0.8279	99914
14420	Hancock County, Illinois	14	0.8309	0.8279	99914
14421	Hardin County, Illinois	14	0.8309	0.8279	99914
14440	Henderson County, Illinois	14	0.8309	0.8279	99914
14450	Henry County, Illinois	1960	0.8731	0.8731	19340
14460	Iroquois County, Illinois	14	0.8309	0.8279	99914
14470	Jackson County, Illinois	14	0.8309	0.8279	99914
14480	Jasper County, Illinois	14	0.8309	0.8279	99914
14490	Jefferson County, Illinois	14	0.8309	0.8279	99914
14500	Jersey County, Illinois	7040	0.8957	0.8949	41180
14510	Jo Daviess County, Illinois	14	0.8309	0.8279	99914
14520	Johnson County, Illinois	14	0.8309	0.8279	99914
14530	Kane County, Illinois	1600	1.0838	1.0848	16974
14540	Kankakee County, Illinois	3740	1.0974	1.0974	28100
14550	Kendall County, Illinois	1600	1.0838	1.0848	16974
14560	Knox County, Illinois	14	0.8309	0.8279	99914
14570	Lake County, Illinois	1600	1.0838	1.0440	29404
14580	La Salle County, Illinois	14	0.8309	0.8279	99914
14590	Lawrence County, Illinois	14	0.8309	0.8279	99914
14600	Lee County, Illinois	14	0.8309	0.8279	99914
14610	Livingston County, Illinois	14	0.8309	0.8279	99914
14620	Logan County, Illinois	14	0.8309	0.8279	99914
14630	Mc Donough County, Illinois	14	0.8309	0.8279	99914
14640	Mc Henry County, Illinois	1600	1.0838	1.0848	16974
14650	Mclean County, Illinois	1040	0.9084	0.9084	14060
14660	Macon County, Illinois	2040	0.8076	0.8076	19500
14670	Macoupin County, Illinois	14	0.8309	0.8949	41180
14680	Madison County, Illinois	7040	0.8957	0.8949	41180
14690	Marion County, Illinois	14	0.8309	0.8279	99914
14700	Marshall County, Illinois	14	0.8309	0.8868	37900
14710	Mason County, Illinois	14	0.8309	0.8279	99914
14720	Massac County, Illinois	14	0.8309	0.8279	99914
14730	Menard County, Illinois	7880	0.8885	0.8885	44100

TABLE A.—MSA/CBSA CROSSWALK—Continued

SSA State/ County Code	County and State Name	MSA Number	2006 MSA-based WI	2006 CBSA-based WI	CBSA Number
14740	Mercer County, Illinois	14	0.8309	0.8731	19340
14750	Monroe County, Illinois	7040	0.8957	0.8949	41180
14760	Montgomery County, Illinois	14	0.8309	0.8279	99914
14770	Morgan County, Illinois	14	0.8309	0.8279	99914
14780	Moultrie County, Illinois	14	0.8309	0.8279	99914
14790	Ogle County, Illinois	6880	0.9994	0.8279	99914
14800	Peoria County, Illinois	6120	0.8868	0.8868	37900
14810	Perry County, Illinois	14	0.8309	0.8279	99914
14820	Piatt County, Illinois	14	0.8309	0.9604	16580
14830	Pike County, Illinois	14	0.8309	0.8279	99914
14831	Pope County, Illinois	14	0.8309	0.8279	99914
14850	Pulaski County, Illinois	14	0.8309	0.8279	99914
14860	Putnam County, Illinois	14	0.8309	0.8279	99914
14870	Randolph County, Illinois	14	0.8309	0.8279	99914
14880	Richland County, Illinois	14	0.8309	0.8279	99914
14890	Rock Island County, Illinois	1960	0.8731	0.8731	19340
14900	St Clair County, Illinois	7040	0.8957	0.8949	41180
14910	Saline County, Illinois	14	0.8309	0.8279	99914
14920	Sangamon County, Illinois	7880	0.8885	0.8885	44100
14921	Schuyler County, Illinois	14	0.8309	0.8279	99914
14940	Scott County, Illinois	14	0.8309	0.8279	99914
14950	Shelby County, Illinois	14	0.8309	0.8279	99914
14960	Stark County, Illinois	14	0.8309	0.8868	37900
14970	Stephenson County, Illinois	14	0.8309	0.8279	99914
14980	Tazewell County, Illinois	6120	0.8868	0.8868	37900
14981	Union County, Illinois	14	0.8309	0.8279	99914
14982	Vermilion County, Illinois	14	0.8309	0.9037	19180
14983	Wabash County, Illinois	14	0.8309	0.8279	99914
14984	Warren County, Illinois	14	0.8309	0.8279	99914
14985	Washington County, Illinois	14	0.8309	0.8279	99914
14986	Wayne County, Illinois	14	0.8309	0.8279	99914
14987	White County, Illinois	14	0.8309	0.8279	99914
14988	Whiteside County, Illinois	14	0.8309	0.8279	99914
14989	Will County, Illinois	1600	1.0838	1.0848	16974
14990	Williamson County, Illinois	14	0.8309	0.8279	99914
14991	Winnebago County, Illinois	6880	0.9994	0.9994	40420
14992	Woodford County, Illinois	6120	0.8868	0.8868	37900
15000	Adams County, Indiana	2760	0.9716	0.8630	99915
15010	Allen County, Indiana	2760	0.9716	0.9803	23060
15020	Bartholomew County, Indiana	15	0.8727	0.9598	18020
15030	Benton County, Indiana	15	0.8727	0.8745	29140
15040	Blackford County, Indiana	15	0.8727	0.8630	99915
15050	Boone County, Indiana	3480	0.9875	0.9930	26900
15060	Brown County, Indiana	15	0.8727	0.9930	26900
15070	Carroll County, Indiana	15	0.8727	0.8745	29140
15080	Cass County, Indiana	15	0.8727	0.8630	99915
15090	Clark County, Indiana	4520	0.9302	0.9261	31140
15100	Clay County, Indiana	8320	0.8345	0.8313	45460
15110	Clinton County, Indiana	3920	0.8745	0.8630	99915
15120	Crawford County, Indiana	15	0.8727	0.8630	99915
15130	Daviess County, Indiana	15	0.8727	0.8630	99915
15140	Dearborn County, Indiana	1640	0.9742	0.9623	17140
15150	Decatur County, Indiana	15	0.8727	0.8630	99915
15160	De Kalb County, Indiana	2760	0.9716	0.8630	99915
15170	Delaware County, Indiana	5280	0.8939	0.8939	34620
15180	Dubois County, Indiana	15	0.8727	0.8630	99915
15190	Elkhart County, Indiana	2330	0.9637	0.9637	21140
15200	Fayette County, Indiana	15	0.8727	0.8630	99915
15210	Floyd County, Indiana	4520	0.9302	0.9261	31140
15220	Fountain County, Indiana	15	0.8727	0.8630	99915
15230	Franklin County, Indiana	15	0.8727	0.9623	17140
15240	Fulton County, Indiana	15	0.8727	0.8630	99915
15250	Gibson County, Indiana	15	0.8727	0.8721	21780
15260	Grant County, Indiana	15	0.8727	0.8630	99915
15270	Greene County, Indiana	15	0.8727	0.8456	14020
15280	Hamilton County, Indiana	3480	0.9875	0.9930	26900
15290	Hancock County, Indiana	3480	0.9875	0.9930	26900
15300	Harrison County, Indiana	4520	0.9302	0.9261	31140
15310	Hendricks County, Indiana	3480	0.9875	0.9930	26900

TABLE A.—MSA/CBSA CROSSWALK—Continued

SSA State/ County Code	County and State Name	MSA Number	2006 MSA-based WI	2006 CBSA-based WI	CBSA Number
15320	Henry County, Indiana	15	0.8727	0.8630	99915
15330	Howard County, Indiana	3850	0.9517	0.9517	29020
15340	Huntington County, Indiana	2760	0.9716	0.8630	99915
15350	Jackson County, Indiana	15	0.8727	0.8630	99915
15360	Jasper County, Indiana	15	0.8727	0.9369	23844
15370	Jay County, Indiana	15	0.8727	0.8630	99915
15380	Jefferson County, Indiana	15	0.8727	0.8630	99915
15390	Jennings County, Indiana	15	0.8727	0.8630	99915
15400	Johnson County, Indiana	3480	0.9875	0.9930	26900
15410	Knox County, Indiana	15	0.8727	0.8630	99915
15420	Kosciusko County, Indiana	15	0.8727	0.8630	99915
15430	Lagrange County, Indiana	15	0.8727	0.8630	99915
15440	Lake County, Indiana	2960	0.9404	0.9369	23844
15450	La Porte County, Indiana	15	0.8727	0.9409	33140
15460	Lawrence County, Indiana	15	0.8727	0.8630	99915
15470	Madison County, Indiana	3480	0.9875	0.8595	11300
15480	Marion County, Indiana	3480	0.9875	0.9930	26900
15490	Marshall County, Indiana	15	0.8727	0.8630	99915
15500	Martin County, Indiana	15	0.8727	0.8630	99915
15510	Miami County, Indiana	15	0.8727	0.8630	99915
15520	Monroe County, Indiana	1020	0.8456	0.8456	14020
15530	Montgomery County, Indiana	15	0.8727	0.8630	99915
15540	Morgan County, Indiana	3480	0.9875	0.9930	26900
15550	Newton County, Indiana	15	0.8727	0.9369	23844
15560	Noble County, Indiana	15	0.8727	0.8630	99915
15570	Ohio County, Indiana	1640	0.9742	0.9623	17140
15580	Orange County, Indiana	15	0.8727	0.8630	99915
15590	Owen County, Indiana	15	0.8727	0.8456	14020
15600	Parke County, Indiana	15	0.8727	0.8630	99915
15610	Perry County, Indiana	15	0.8727	0.8630	99915
15620	Pike County, Indiana	15	0.8727	0.8630	99915
15630	Porter County, Indiana	2960	0.9404	0.9369	23844
15640	Posey County, Indiana	2440	0.8721	0.8721	21780
15650	Pulaski County, Indiana	15	0.8727	0.8630	99915
15660	Putnam County, Indiana	15	0.8727	0.9930	26900
15670	Randolph County, Indiana	15	0.8727	0.8630	99915
15680	Ripley County, Indiana	15	0.8727	0.8630	99915
15690	Rush County, Indiana	15	0.8727	0.8630	99915
15700	St Joseph County, Indiana	7800	0.9798	0.9798	43780
15710	Scott County, Indiana	4520	0.9302	0.8630	99915
15720	Shelby County, Indiana	3480	0.9875	0.9930	26900
15730	Spencer County, Indiana	15	0.8727	0.8630	99915
15740	Starke County, Indiana	15	0.8727	0.8630	99915
15750	Steuben County, Indiana	15	0.8727	0.8630	99915
15760	Sullivan County, Indiana	15	0.8727	0.8313	45460
15770	Switzerland County, Indiana	15	0.8727	0.8630	99915
15780	Tippecanoe County, Indiana	3920	0.8745	0.8745	29140
15790	Tipton County, Indiana	3850	0.9517	0.9517	29020
15800	Union County, Indiana	15	0.8727	0.8630	99915
15810	Vanderburgh County, Indiana	2440	0.8721	0.8721	21780
15820	Vermillion County, Indiana	8320	0.8345	0.8313	45460
15830	Vigo County, Indiana	8320	0.8345	0.8313	45460
15840	Wabash County, Indiana	15	0.8727	0.8630	99915
15840	Warren County, Indiana	15	0.8727	0.8630	99915
15860	Warrick County, Indiana	2440	0.8721	0.8721	21780
15870	Washington County, Indiana	15	0.8727	0.9261	31140
15880	Wayne County, Indiana	15	0.8727	0.8630	99915
15890	Wells County, Indiana	2760	0.9716	0.9803	23060
15900	White County, Indiana	15	0.8727	0.8630	99915
15910	Whitley County, Indiana	2760	0.9716	0.9803	23060
16000	Adair County, Iowa	16	0.8588	0.8502	99916
16010	Adams County, Iowa	16	0.8588	0.8502	99916
16020	Allamakee County, Iowa	16	0.8588	0.8502	99916
16030	Appanoose County, Iowa	16	0.8588	0.8502	99916
16040	Audubon County, Iowa	16	0.8588	0.8502	99916
16050	Benton County, Iowa	16	0.8588	0.8617	16300
16060	Black Hawk County, Iowa	8920	0.8566	0.8566	47940
16070	Boone County, Iowa	16	0.8588	0.8502	99916
16080	Bremer County, Iowa	16	0.8588	0.8566	47940

TABLE A.—MSA/CBSA CROSSWALK—Continued

SSA State/ County Code	County and State Name	MSA Number	2006 MSA-based WI	2006 CBSA-based WI	CBSA Number
16090	Buchanan County, Iowa	16	0.8588	0.8502	99916
16100	Buena Vista County, Iowa	16	0.8588	0.8502	99916
16110	Butler County, Iowa	16	0.8588	0.8502	99916
16120	Calhoun County, Iowa	16	0.8588	0.8502	99916
16130	Carroll County, Iowa	16	0.8588	0.8502	99916
16140	Cass County, Iowa	16	0.8588	0.8502	99916
16150	Cedar County, Iowa	16	0.8588	0.8502	99916
16160	Cerro Gordo County, Iowa	16	0.8588	0.8502	99916
16170	Cherokee County, Iowa	16	0.8588	0.8502	99916
16180	Chickasaw County, Iowa	16	0.8588	0.8502	99916
16190	Clarke County, Iowa	16	0.8588	0.8502	99916
16200	Clay County, Iowa	16	0.8588	0.8502	99916
16210	Clayton County, Iowa	16	0.8588	0.8502	99916
16220	Clinton County, Iowa	16	0.8588	0.8502	99916
16230	Crawford County, Iowa	16	0.8588	0.8502	99916
16240	Dallas County, Iowa	2120	0.9651	0.9651	19780
16250	Davis County, Iowa	16	0.8588	0.8502	99916
16260	Decatur County, Iowa	16	0.8588	0.8502	99916
16270	Delaware County, Iowa	16	0.8588	0.8502	99916
16280	Des Moines County, Iowa	16	0.8588	0.8502	99916
16290	Dickinson County, Iowa	16	0.8588	0.8502	99916
16300	Dubuque County, Iowa	2200	0.9135	0.9135	20220
16310	Emmet County, Iowa	16	0.8588	0.8502	99916
16320	Fayette County, Iowa	16	0.8588	0.8502	99916
16330	Floyd County, Iowa	16	0.8588	0.8502	99916
16340	Franklin County, Iowa	16	0.8588	0.8502	99916
16350	Fremont County, Iowa	16	0.8588	0.8502	99916
16360	Greene County, Iowa	16	0.8588	0.8502	99916
16370	Grundy County, Iowa	16	0.8588	0.8566	47940
16380	Guthrie County, Iowa	16	0.8588	0.9651	19780
16390	Hamilton County, Iowa	16	0.8588	0.8502	99916
16400	Hancock County, Iowa	16	0.8588	0.8502	99916
16410	Hardin County, Iowa	16	0.8588	0.8502	99916
16420	Harrison County, Iowa	16	0.8588	0.9569	36540
16430	Henry County, Iowa	16	0.8588	0.8502	99916
16440	Howard County, Iowa	16	0.8588	0.8502	99916
16450	Humboldt County, Iowa	16	0.8588	0.8502	99916
16460	Ida County, Iowa	16	0.8588	0.8502	99916
16470	Iowa County, Iowa	16	0.8588	0.8502	99916
16480	Jackson County, Iowa	16	0.8588	0.8502	99916
16490	Jasper County, Iowa	16	0.8588	0.8502	99916
16500	Jefferson County, Iowa	16	0.8588	0.8502	99916
16510	Johnson County, Iowa	3500	0.9756	0.9756	26980
16520	Jones County, Iowa	16	0.8588	0.8617	16300
16530	Keokuk County, Iowa	16	0.8588	0.8502	99916
16540	Kossuth County, Iowa	16	0.8588	0.8502	99916
16550	Lee County, Iowa	16	0.8588	0.8502	99916
16560	Linn County, Iowa	1360	0.8617	0.8617	16300
16570	Louisa County, Iowa	16	0.8588	0.8502	99916
16580	Lucas County, Iowa	16	0.8588	0.8502	99916
16590	Lyon County, Iowa	16	0.8588	0.8502	99916
16600	Madison County, Iowa	16	0.8588	0.9651	19780
16610	Mahaska County, Iowa	16	0.8588	0.8502	99916
16620	Marion County, Iowa	16	0.8588	0.8502	99916
16630	Marshall County, Iowa	16	0.8588	0.8502	99916
16640	Mills County, Iowa	16	0.8588	0.9569	36540
16650	Mitchell County, Iowa	16	0.8588	0.8502	99916
16660	Monona County, Iowa	16	0.8588	0.8502	99916
16670	Monroe County, Iowa	16	0.8588	0.8502	99916
16680	Montgomery County, Iowa	16	0.8588	0.8502	99916
16690	Muscatine County, Iowa	16	0.8588	0.8502	99916
16700	OBrien County, Iowa	16	0.8588	0.8502	99916
16710	Osceola County, Iowa	16	0.8588	0.8502	99916
16720	Page County, Iowa	16	0.8588	0.8502	99916
16730	Palo Alto County, Iowa	16	0.8588	0.8502	99916
16740	Plymouth County, Iowa	16	0.8588	0.8502	99916
16750	Pocahontas County, Iowa	16	0.8588	0.8502	99916
16760	Polk County, Iowa	2120	0.9651	0.9651	19780
16770	Pottawattamie County, Iowa	5920	0.9569	0.9569	36540

TABLE A.—MSA/CBSA CROSSWALK—Continued

SSA State/ County Code	County and State Name	MSA Number	2006 MSA-based WI	2006 CBSA-based WI	CBSA Number
16780	Poweshiek County, Iowa	16	0.8588	0.8502	99916
16790	Ringgold County, Iowa	16	0.8588	0.8502	99916
16800	Sac County, Iowa	16	0.8588	0.8502	99916
16810	Scott County, Iowa	1960	0.8731	0.8731	19340
16820	Shelby County, Iowa	16	0.8588	0.8502	99916
16830	Sioux County, Iowa	16	0.8588	0.8502	99916
16840	Story County, Iowa	16	0.8588	0.9545	11180
16850	Tama County, Iowa	16	0.8588	0.8502	99916
16860	Taylor County, Iowa	16	0.8588	0.8502	99916
16870	Union County, Iowa	16	0.8588	0.8502	99916
16880	Van Buren County, Iowa	16	0.8588	0.8502	99916
16890	Wapello County, Iowa	16	0.8588	0.8502	99916
16900	Warren County, Iowa	2120	0.9651	0.9651	19780
16910	Washington County, Iowa	16	0.8588	0.9756	26980
16920	Wayne County, Iowa	16	0.8588	0.8502	99916
16930	Webster County, Iowa	16	0.8588	0.8502	99916
16940	Winnebago County, Iowa	16	0.8588	0.8502	99916
16950	Winneshiek County, Iowa	16	0.8588	0.8502	99916
16960	Woodbury County, Iowa	7720	0.9411	0.9376	43580
16970	Worth County, Iowa	16	0.8588	0.8502	99916
16980	Wright County, Iowa	16	0.8588	0.8502	99916
17000	Allen County, Kansas	17	0.7994	0.7987	99917
17010	Anderson County, Kansas	17	0.7994	0.7987	99917
17020	Atchison County, Kansas	17	0.7994	0.7987	99917
17030	Barber County, Kansas	17	0.7994	0.7987	99917
17040	Barton County, Kansas	17	0.7994	0.7987	99917
17050	Bourbon County, Kansas	17	0.7994	0.7987	99917
17060	Brown County, Kansas	17	0.7994	0.7987	99917
17070	Butler County, Kansas	9040	0.9163	0.9141	48620
17080	Chase County, Kansas	17	0.7994	0.7987	99917
17090	Chautauqua County, Kansas	17	0.7994	0.7987	99917
17100	Cherokee County, Kansas	17	0.7994	0.7987	99917
17110	Cheyenne County, Kansas	17	0.7994	0.7987	99917
17120	Clark County, Kansas	17	0.7994	0.7987	99917
17130	Clay County, Kansas	17	0.7994	0.7987	99917
17140	Cloud County, Kansas	17	0.7994	0.7987	99917
17150	Coffey County, Kansas	17	0.7994	0.7987	99917
17160	Comanche County, Kansas	17	0.7994	0.7987	99917
17170	Cowley County, Kansas	17	0.7994	0.7987	99917
17180	Crawford County, Kansas	17	0.7994	0.7987	99917
17190	Decatur County, Kansas	17	0.7994	0.7987	99917
17200	Dickinson County, Kansas	17	0.7994	0.7987	99917
17210	Doniphan County, Kansas	17	0.7994	0.9529	41140
17220	Douglas County, Kansas	4150	0.8546	0.8546	29940
17230	Edwards County, Kansas	17	0.7994	0.7987	99917
17240	Elk County, Kansas	17	0.7994	0.7987	99917
17250	Ellis County, Kansas	17	0.7994	0.7987	99917
17260	Ellsworth County, Kansas	17	0.7994	0.7987	99917
17270	Finney County, Kansas	17	0.7994	0.7987	99917
17280	Ford County, Kansas	17	0.7994	0.7987	99917
17290	Franklin County, Kansas	17	0.7994	0.9467	28140
17300	Geary County, Kansas	17	0.7994	0.7987	99917
17310	Gove County, Kansas	17	0.7994	0.7987	99917
17320	Graham County, Kansas	17	0.7994	0.7987	99917
17330	Grant County, Kansas	17	0.7994	0.7987	99917
17340	Gray County, Kansas	17	0.7994	0.7987	99917
17350	Greeley County, Kansas	17	0.7994	0.7987	99917
17360	Greenwood County, Kansas	17	0.7994	0.7987	99917
17370	Hamilton County, Kansas	17	0.7994	0.7987	99917
17380	Harper County, Kansas	17	0.7994	0.7987	99917
17390	Harvey County, Kansas	9040	0.9163	0.9141	48620
17391	Haskell County, Kansas	17	0.7994	0.7987	99917
17410	Hodgeman County, Kansas	17	0.7994	0.7987	99917
17420	Jackson County, Kansas	17	0.7994	0.8929	45820
17430	Jefferson County, Kansas	17	0.7994	0.8929	45820
17440	Jewell County, Kansas	17	0.7994	0.7987	99917
17450	Johnson County, Kansas	3760	0.9481	0.9467	28140
17451	Kearny County, Kansas	17	0.7994	0.7987	99917
17470	Kingman County, Kansas	17	0.7994	0.7987	99917

TABLE A.—MSA/CBSA CROSSWALK—Continued

SSA State/ County Code	County and State Name	MSA Number	2006 MSA-based WI	2006 CBSA-based WI	CBSA Number
17480	Kiowa County, Kansas	17	0.7994	0.7987	99917
17490	Labette County, Kansas	17	0.7994	0.7987	99917
17500	Lane County, Kansas	17	0.7994	0.7987	99917
17510	Leavenworth County, Kansas	3760	0.9481	0.9467	28140
17520	Lincoln County, Kansas	17	0.7994	0.7987	99917
17530	Linn County, Kansas	17	0.7994	0.9467	28140
17540	Logan County, Kansas	17	0.7994	0.7987	99917
17550	Lyon County, Kansas	17	0.7994	0.7987	99917
17560	Mc Pherson County, Kansas	17	0.7994	0.7987	99917
17570	Marion County, Kansas	17	0.7994	0.7987	99917
17580	Marshall County, Kansas	17	0.7994	0.7987	99917
17590	Meade County, Kansas	17	0.7994	0.7987	99917
17600	Miami County, Kansas	3760	0.9481	0.9467	28140
17610	Mitchell County, Kansas	17	0.7994	0.7987	99917
17620	Montgomery County, Kansas	17	0.7994	0.7987	99917
17630	Morris County, Kansas	17	0.7994	0.7987	99917
17640	Morton County, Kansas	17	0.7994	0.7987	99917
17650	Nemaha County, Kansas	17	0.7994	0.7987	99917
17660	Neosho County, Kansas	17	0.7994	0.7987	99917
17670	Ness County, Kansas	17	0.7994	0.7987	99917
17680	Norton County, Kansas	17	0.7994	0.7987	99917
17690	Osage County, Kansas	17	0.7994	0.8929	45820
17700	Osborne County, Kansas	17	0.7994	0.7987	99917
17710	Ottawa County, Kansas	17	0.7994	0.7987	99917
17720	Pawnee County, Kansas	17	0.7994	0.7987	99917
17730	Phillips County, Kansas	17	0.7994	0.7987	99917
17740	Pottawatomie County, Kansas	17	0.7994	0.7987	99917
17750	Pratt County, Kansas	17	0.7994	0.7987	99917
17760	Rawlins County, Kansas	17	0.7994	0.7987	99917
17770	Reno County, Kansas	17	0.7994	0.7987	99917
17780	Republic County, Kansas	17	0.7994	0.7987	99917
17790	Rice County, Kansas	17	0.7994	0.7987	99917
17800	Riley County, Kansas	17	0.7994	0.7987	99917
17810	Rooks County, Kansas	17	0.7994	0.7987	99917
17820	Rush County, Kansas	17	0.7994	0.7987	99917
17830	Russell County, Kansas	17	0.7994	0.7987	99917
17840	Saline County, Kansas	17	0.7994	0.7987	99917
17841	Scott County, Kansas	17	0.7994	0.7987	99917
17860	Sedgwick County, Kansas	9040	0.9163	0.9141	48620
17870	Seward County, Kansas	17	0.7994	0.7987	99917
17880	Shawnee County, Kansas	8440	0.8929	0.8929	45820
17890	Sheridan County, Kansas	17	0.7994	0.7987	99917
17900	Sherman County, Kansas	17	0.7994	0.7987	99917
17910	Smith County, Kansas	17	0.7994	0.7987	99917
17920	Stafford County, Kansas	17	0.7994	0.7987	99917
17921	Stanton County, Kansas	17	0.7994	0.7987	99917
17940	Stevens County, Kansas	17	0.7994	0.7987	99917
17950	Sumner County, Kansas	17	0.7994	0.9141	48620
17960	Thomas County, Kansas	17	0.7994	0.7987	99917
17970	Trego County, Kansas	17	0.7994	0.7987	99917
17980	Wabaunsee County, Kansas	17	0.7994	0.8929	45820
17981	Wallace County, Kansas	17	0.7994	0.7987	99917
17982	Washington County, Kansas	17	0.7994	0.7987	99917
17983	Wichita County, Kansas	17	0.7994	0.7987	99917
17984	Wilson County, Kansas	17	0.7994	0.7987	99917
17985	Woodson County, Kansas	17	0.7994	0.7987	99917
17986	Wyandotte County, Kansas	3760	0.9481	0.9467	28140
18000	Adair County, Kentucky	18	0.7866	0.7774	99918
18010	Allen County, Kentucky	18	0.7866	0.7774	99918
18020	Anderson County, Kentucky	18	0.7866	0.7774	99918
18030	Ballard County, Kentucky	18	0.7866	0.7774	99918
18040	Barren County, Kentucky	18	0.7866	0.7774	99918
18050	Bath County, Kentucky	18	0.7866	0.7774	99918
18060	Bell County, Kentucky	18	0.7866	0.7774	99918
18070	Boone County, Kentucky	1640	0.9742	0.9623	17140
18080	Bourbon County, Kentucky	4280	0.8997	0.9084	30460
18090	Boyd County, Kentucky	3400	0.9486	0.9486	26580
18100	Boyle County, Kentucky	18	0.7866	0.7774	99918
18110	Bracken County, Kentucky	18	0.7866	0.9623	17140

TABLE A.—MSA/CBSA CROSSWALK—Continued

SSA State/ County Code	County and State Name	MSA Number	2006 MSA-based WI	2006 CBSA-based WI	CBSA Number
18120	Breathitt County, Kentucky	18	0.7866	0.7774	99918
18130	Breckinridge County, Kentucky	18	0.7866	0.7774	99918
18140	Bullitt County, Kentucky	4520	0.9302	0.9261	31140
18150	Butler County, Kentucky	18	0.7866	0.7774	99918
18160	Caldwell County, Kentucky	18	0.7866	0.7774	99918
18170	Calloway County, Kentucky	18	0.7866	0.7774	99918
18180	Campbell County, Kentucky	1640	0.9742	0.9623	17140
18190	Carlisle County, Kentucky	18	0.7866	0.7774	99918
18191	Carroll County, Kentucky	18	0.7866	0.7774	99918
18210	Carter County, Kentucky	3400	0.9486	0.7774	99918
18220	Casey County, Kentucky	18	0.7866	0.7774	99918
18230	Christian County, Kentucky	1660	0.8292	0.8292	17300
18240	Clark County, Kentucky	4280	0.8997	0.9084	30460
18250	Clay County, Kentucky	18	0.7866	0.7774	99918
18260	Clinton County, Kentucky	18	0.7866	0.7774	99918
18270	Crittenden County, Kentucky	18	0.7866	0.7774	99918
18271	Cumberland County, Kentucky	18	0.7866	0.7774	99918
18290	Daviess County, Kentucky	5990	0.8789	0.8789	36980
18291	Edmonson County, Kentucky	18	0.7866	0.8220	14540
18310	Elliott County, Kentucky	18	0.7866	0.7774	99918
18320	Estill County, Kentucky	18	0.7866	0.7774	99918
18330	Fayette County, Kentucky	4280	0.8997	0.9084	30460
18340	Fleming County, Kentucky	18	0.7866	0.7774	99918
18350	Floyd County, Kentucky	18	0.7866	0.7774	99918
18360	Franklin County, Kentucky	18	0.7866	0.7774	99918
18361	Fulton County, Kentucky	18	0.7866	0.7774	99918
18362	Gallatin County, Kentucky	1640	0.9742	0.9623	17140
18390	Garrard County, Kentucky	18	0.7866	0.7774	99918
18400	Grant County, Kentucky	1640	0.9742	0.9623	17140
18410	Graves County, Kentucky	18	0.7866	0.7774	99918
18420	Grayson County, Kentucky	18	0.7866	0.7774	99918
18421	Green County, Kentucky	18	0.7866	0.7774	99918
18440	Greenup County, Kentucky	3400	0.9486	0.9486	26580
18450	Hancock County, Kentucky	18	0.7866	0.8789	36980
18460	Hardin County, Kentucky	18	0.7866	0.8810	21060
18470	Harlan County, Kentucky	18	0.7866	0.7774	99918
18480	Harrison County, Kentucky	18	0.7866	0.7774	99918
18490	Hart County, Kentucky	18	0.7866	0.7774	99918
18500	Henderson County, Kentucky	2440	0.8721	0.8721	21780
18510	Henry County, Kentucky	18	0.7866	0.9261	31140
18511	Hickman County, Kentucky	18	0.7866	0.7774	99918
18530	Hopkins County, Kentucky	18	0.7866	0.7774	99918
18540	Jackson County, Kentucky	18	0.7866	0.7774	99918
18550	Jefferson County, Kentucky	4520	0.9302	0.9261	31140
18560	Jessamine County, Kentucky	4280	0.8997	0.9084	30460
18570	Johnson County, Kentucky	18	0.7866	0.7774	99918
18580	Kenton County, Kentucky	1640	0.9742	0.9623	17140
18590	Knott County, Kentucky	18	0.7866	0.7774	99918
18600	Knox County, Kentucky	18	0.7866	0.7774	99918
18610	Larue County, Kentucky	18	0.7866	0.8810	21060
18620	Laurel County, Kentucky	18	0.7866	0.7774	99918
18630	Lawrence County, Kentucky	18	0.7866	0.7774	99918
18640	Lee County, Kentucky	18	0.7866	0.7774	99918
18650	Leslie County, Kentucky	18	0.7866	0.7774	99918
18660	Letcher County, Kentucky	18	0.7866	0.7774	99918
18670	Lewis County, Kentucky	18	0.7866	0.7774	99918
18680	Lincoln County, Kentucky	18	0.7866	0.7774	99918
18690	Livingston County, Kentucky	18	0.7866	0.7774	99918
18700	Logan County, Kentucky	18	0.7866	0.7774	99918
18710	Lyon County, Kentucky	18	0.7866	0.7774	99918
18720	Mc Cracken County, Kentucky	18	0.7866	0.7774	99918
18730	Mc Creary County, Kentucky	18	0.7866	0.7774	99918
18740	Mc Lean County, Kentucky	18	0.7866	0.8789	36980
18750	Madison County, Kentucky	4280	0.8997	0.7774	99918
18760	Magoffin County, Kentucky	18	0.7866	0.7774	99918
18770	Marion County, Kentucky	18	0.7866	0.7774	99918
18780	Marshall County, Kentucky	18	0.7866	0.7774	99918
18790	Martin County, Kentucky	18	0.7866	0.7774	99918
18800	Mason County, Kentucky	18	0.7866	0.7774	99918

TABLE A.—MSA/CBSA CROSSWALK—Continued

SSA State/ County Code	County and State Name	MSA Number	2006 MSA-based WI	2006 CBSA-based WI	CBSA Number
18801	Meade County, Kentucky	18	0.7866	0.9261	31140
18802	Menifee County, Kentucky	18	0.7866	0.7774	99918
18830	Mercer County, Kentucky	18	0.7866	0.7774	99918
18831	Metcalfe County, Kentucky	18	0.7866	0.7774	99918
18850	Monroe County, Kentucky	18	0.7866	0.7774	99918
18860	Montgomery County, Kentucky	18	0.7866	0.7774	99918
18861	Morgan County, Kentucky	18	0.7866	0.7774	99918
18880	Muhlenberg County, Kentucky	18	0.7866	0.7774	99918
18890	Nelson County, Kentucky	18	0.7866	0.9261	31140
18900	Nicholas County, Kentucky	18	0.7866	0.7774	99918
18910	Ohio County, Kentucky	18	0.7866	0.7774	99918
18920	Oldham County, Kentucky	4520	0.9302	0.9261	31140
18930	Owen County, Kentucky	18	0.7866	0.7774	99918
18931	Owsley County, Kentucky	18	0.7866	0.7774	99918
18932	Pendleton County, Kentucky	1640	0.9742	0.9623	17140
18960	Perry County, Kentucky	18	0.7866	0.7774	99918
18970	Pike County, Kentucky	18	0.7866	0.7774	99918
18971	Powell County, Kentucky	18	0.7866	0.7774	99918
18972	Pulaski County, Kentucky	18	0.7866	0.7774	99918
18973	Robertson County, Kentucky	18	0.7866	0.7774	99918
18974	Rockcastle County, Kentucky	18	0.7866	0.7774	99918
18975	Rowan County, Kentucky	18	0.7866	0.7774	99918
18976	Russell County, Kentucky	18	0.7866	0.7774	99918
18977	Scott County, Kentucky	4280	0.8997	0.9084	30460
18978	Shelby County, Kentucky	18	0.7866	0.9261	31140
18979	Simpson County, Kentucky	18	0.7866	0.7774	99918
18980	Spencer County, Kentucky	18	0.7866	0.9261	31140
18981	Taylor County, Kentucky	18	0.7866	0.7774	99918
18982	Todd County, Kentucky	18	0.7866	0.7774	99918
18983	Trigg County, Kentucky	18	0.7866	0.8292	17300
18984	Trimble County, Kentucky	18	0.7866	0.9261	31140
18985	Union County, Kentucky	18	0.7866	0.7774	99918
18986	Warren County, Kentucky	18	0.7866	0.8220	14540
18987	Washington County, Kentucky	18	0.7866	0.7774	99918
18988	Wayne County, Kentucky	18	0.7866	0.7774	99918
18989	Webster County, Kentucky	18	0.7866	0.8721	21780
18990	Whitley County, Kentucky	18	0.7866	0.7774	99918
18991	Wolfe County, Kentucky	18	0.7866	0.7774	99918
18992	Woodford County, Kentucky	4280	0.8997	0.9084	30460
19000	Acadia County, Louisiana	3880	0.8260	0.7418	99919
19010	Allen County, Louisiana	19	0.7348	0.7418	99919
19020	Ascension County, Louisiana	0760	0.8652	0.8601	12940
19030	Assumption County, Louisiana	19	0.7348	0.7418	99919
19040	Avoyelles County, Louisiana	19	0.7348	0.7418	99919
19050	Beauregard County, Louisiana	19	0.7348	0.7418	99919
19060	Bienville County, Louisiana	19	0.7348	0.7418	99919
19070	Bossier County, Louisiana	7680	0.8746	0.8769	43340
19080	Caddo County, Louisiana	7680	0.8746	0.8769	43340
19090	Calcasieu County, Louisiana	3960	0.7866	0.7841	29340
19100	Caldwell County, Louisiana	19	0.7348	0.7418	99919
19110	Cameron County, Louisiana	19	0.7348	0.7841	29340
19120	Catahoula County, Louisiana	19	0.7348	0.7418	99919
19130	Claiborne County, Louisiana	19	0.7348	0.7418	99919
19140	Concordia County, Louisiana	19	0.7348	0.7418	99919
19150	De Soto County, Louisiana	19	0.7348	0.8769	43340
19160	East Baton Rouge County, Louisiana	0760	0.8652	0.8601	12940
19170	East Carroll County, Louisiana	19	0.7348	0.7418	99919
19180	East Feliciana County, Louisiana	19	0.7348	0.8601	12940
19190	Evangeline County, Louisiana	19	0.7348	0.7418	99919
19200	Franklin County, Louisiana	19	0.7348	0.7418	99919
19210	Grant County, Louisiana	19	0.7348	0.8041	10780
19220	Iberia County, Louisiana	19	0.7348	0.7418	99919
19230	Iberville County, Louisiana	19	0.7348	0.8601	12940
19240	Jackson County, Louisiana	19	0.7348	0.7418	99919
19250	Jefferson County, Louisiana	5560	0.9005	0.9005	35380
19260	Jefferson Davis County, Louisiana	19	0.7348	0.7418	99919
19270	Lafayette County, Louisiana	3880	0.8260	0.8436	29180
19280	Lafourche County, Louisiana	3350	0.7902	0.7902	26380
19290	La Salle County, Louisiana	19	0.7348	0.7418	99919

TABLE A.—MSA/CBSA CROSSWALK—Continued

SSA State/ County Code	County and State Name	MSA Number	2006 MSA-based WI	2006 CBSA-based WI	CBSA Number
19300	Lincoln County, Louisiana	19	0.7348	0.7418	99919
19310	Livingston County, Louisiana	0760	0.8652	0.8601	12940
19320	Madison County, Louisiana	19	0.7348	0.7418	99919
19330	Morehouse County, Louisiana	19	0.7348	0.7418	99919
19340	Natchitoches County, Louisiana	19	0.7348	0.7418	99919
19350	Orleans County, Louisiana	5560	0.9005	0.9005	35380
19360	Ouachita County, Louisiana	5200	0.8052	0.8040	33740
19370	Plaquemines County, Louisiana	5560	0.9005	0.9005	35380
19380	Pointe Coupee County, Louisiana	19	0.7348	0.8601	12940
19390	Rapides County, Louisiana	0220	0.8041	0.8041	10780
19400	Red River County, Louisiana	19	0.7348	0.7418	99919
19410	Richland County, Louisiana	19	0.7348	0.7418	99919
19420	Sabine County, Louisiana	19	0.7348	0.7418	99919
19430	St Bernard County, Louisiana	5560	0.9005	0.9005	35380
19440	St Charles County, Louisiana	5560	0.9005	0.9005	35380
19450	St Helena County, Louisiana	19	0.7348	0.8601	12940
19460	St James County, Louisiana	5560	0.9005	0.7418	99919
19470	St John Baptist County, Louisiana	5560	0.9005	0.9005	35380
19480	St Landry County, Louisiana	3880	0.8260	0.7418	99919
19490	St Martin County, Louisiana	3880	0.8260	0.8436	29180
19500	St Mary County, Louisiana	19	0.7348	0.7418	99919
19510	St Tammany County, Louisiana	5560	0.9005	0.9005	35380
19520	Tangipahoa County, Louisiana	19	0.7348	0.7418	99919
19530	Tensas County, Louisiana	19	0.7348	0.7418	99919
19540	Terrebonne County, Louisiana	3350	0.7902	0.7902	26380
19550	Union County, Louisiana	19	0.7348	0.8040	33740
19560	Vermilion County, Louisiana	19	0.7348	0.7418	99919
19570	Vernon County, Louisiana	19	0.7348	0.7418	99919
19580	Washington County, Louisiana	19	0.7348	0.7418	99919
19590	Webster County, Louisiana	7680	0.8746	0.7418	99919
19600	West Baton Rouge County, Louisiana	0760	0.8652	0.8601	12940
19610	West Carroll County, Louisiana	19	0.7348	0.7418	99919
19620	West Feliciana County, Louisiana	19	0.7348	0.8601	12940
19630	Winn County, Louisiana	19	0.7348	0.7418	99919
20000	Androscoggin County, Maine	4243	0.9341	0.9341	30340
20010	Aroostook County, Maine	20	0.8852	0.8852	99920
20020	Cumberland County, Maine	6403	1.0392	1.0392	38860
20030	Franklin County, Maine	20	0.8852	0.8852	99920
20040	Hancock County, Maine	20	0.8852	0.8852	99920
20050	Kennebec County, Maine	20	0.8852	0.8852	99920
20060	Knox County, Maine	20	0.8852	0.8852	99920
20070	Lincoln County, Maine	20	0.8852	0.8852	99920
20080	Oxford County, Maine	20	0.8852	0.8852	99920
20090	Penobscot County, Maine	0733	1.0003	1.0003	12620
20100	Piscataquis County, Maine	20	0.8852	0.8852	99920
20110	Sagadahoc County, Maine	6403	1.0392	1.0392	38860
20120	Somerset County, Maine	20	0.8852	0.8852	99920
20130	Waldo County, Maine	20	0.8852	0.8852	99920
20140	Washington County, Maine	20	0.8852	0.8852	99920
20150	York County, Maine	6403	1.0392	1.0392	38860
21000	Allegany County, Maryland	1900	0.9326	0.9326	19060
21010	Anne Arundel County, Maryland	0720	0.9907	0.9907	12580
21020	Baltimore County, Maryland	0720	0.9907	0.9907	12580
21030	Baltimore City County, Maryland	0720	0.9907	0.9907	12580
21040	Calvert County, Maryland	8840	1.0983	1.0932	47894
21050	Caroline County, Maryland	21	0.9085	0.9095	99921
21060	Carroll County, Maryland	0720	0.9907	0.9907	12580
21070	Cecil County, Maryland	9160	1.0537	1.0482	48864
21080	Charles County, Maryland	8840	1.0983	1.0932	47894
21090	Dorchester County, Maryland	21	0.9085	0.9095	99921
21100	Frederick County, Maryland	8840	1.0983	1.1495	13644
21110	Garrett County, Maryland	21	0.9085	0.9095	99921
21120	Harford County, Maryland	0720	0.9907	0.9907	12580
21130	Howard County, Maryland	0720	0.9907	0.9907	12580
21140	Kent County, Maryland	21	0.9085	0.9095	99921
21150	Montgomery County, Maryland	8840	1.0983	1.1495	13644
21160	Prince Georges County, Maryland	8840	1.0983	1.0932	47894
21170	Queen Annes County, Maryland	0720	0.9907	0.9907	12580
21180	St Marys County, Maryland	21	0.9085	0.9095	99921

TABLE A.—MSA/CBSA CROSSWALK—Continued

SSA State/ County Code	County and State Name	MSA Number	2006 MSA-based WI	2006 CBSA-based WI	CBSA Number
21190	Somerset County, Maryland	21	0.9085	0.9073	41540
21200	Talbot County, Maryland	21	0.9085	0.9095	99921
21210	Washington County, Maryland	3180	0.9879	0.9499	25180
21220	Wicomico County, Maryland	21	0.9085	0.9073	41540
21230	Worcester County, Maryland	21	0.9085	0.9095	99921
22000	Barnstable County, Massachusetts	0743	1.2527	1.2527	12700
22010	Berkshire County, Massachusetts	6323	1.0191	1.0191	38340
22020	Bristol County, Massachusetts	1123	1.1152	1.0966	39300
22030	Dukes County, Massachusetts	22	1.0050	1.0216	99922
22040	Essex County, Massachusetts	1123	1.1152	1.0533	21604
22060	Franklin County, Massachusetts	22	1.0050	1.0259	44140
22070	Hampden County, Massachusetts	8003	1.0273	1.0259	44140
22080	Hampshire County, Massachusetts	8003	1.0273	1.0259	44140
22090	Middlesex County, Massachusetts	1123	1.1152	1.1084	15764
22120	Nantucket County, Massachusetts	22	1.0050	1.0216	99922
22130	Norfolk County, Massachusetts	1123	1.1152	1.1543	14484
22150	Plymouth County, Massachusetts	1123	1.1152	1.1543	14484
22160	Suffolk County, Massachusetts	1123	1.1152	1.1543	14484
22170	Worcester County, Massachusetts	1123	1.1152	1.1039	49340
23000	Alcona County, Michigan	23	0.8813	0.8870	99923
23010	Alger County, Michigan	23	0.8813	0.8870	99923
23020	Allegan County, Michigan	3000	0.9455	0.8870	99923
23030	Alpena County, Michigan	23	0.8813	0.8870	99923
23040	Antrim County, Michigan	23	0.8813	0.8870	99923
23050	Arenac County, Michigan	23	0.8813	0.8870	99923
23060	Baraga County, Michigan	23	0.8813	0.8870	99923
23070	Barry County, Michigan	23	0.8813	0.9400	24340
23080	Bay County, Michigan	6960	0.9415	0.9352	13020
23090	Benzie County, Michigan	23	0.8813	0.8870	99923
23100	Berrien County, Michigan	0870	0.8888	0.8888	35660
23110	Branch County, Michigan	23	0.8813	0.8870	99923
23120	Calhoun County, Michigan	3720	1.0151	0.9510	12980
23130	Cass County, Michigan	23	0.8813	0.9798	43780
23140	Charlevoix County, Michigan	23	0.8813	0.8870	99923
23150	Cheboygan County, Michigan	23	0.8813	0.8870	99923
23160	Chippewa County, Michigan	23	0.8813	0.8870	99923
23170	Clare County, Michigan	23	0.8813	0.8870	99923
23180	Clinton County, Michigan	4040	0.9792	0.9792	29620
23190	Crawford County, Michigan	23	0.8813	0.8870	99923
23200	Delta County, Michigan	23	0.8813	0.8870	99923
23210	Dickinson County, Michigan	23	0.8813	0.8870	99923
23220	Eaton County, Michigan	4040	0.9792	0.9792	29620
23230	Emmet County, Michigan	23	0.8813	0.8870	99923
23240	Genesee County, Michigan	2640	1.0663	1.0663	22420
23250	Gladwin County, Michigan	23	0.8813	0.8870	99923
23260	Gogebic County, Michigan	23	0.8813	0.8870	99923
23270	Grand Traverse County, Michigan	23	0.8813	0.8870	99923
23280	Gratiot County, Michigan	23	0.8813	0.8870	99923
23290	Hillsdale County, Michigan	23	0.8813	0.8870	99923
23300	Houghton County, Michigan	23	0.8813	0.8870	99923
23310	Huron County, Michigan	23	0.8813	0.8870	99923
23320	Ingham County, Michigan	4040	0.9792	0.9792	29620
23330	Ionia County, Michigan	23	0.8813	0.9400	24340
23340	Iosco County, Michigan	23	0.8813	0.8870	99923
23350	Iron County, Michigan	23	0.8813	0.8870	99923
23360	Isabella County, Michigan	23	0.8813	0.8870	99923
23370	Jackson County, Michigan	3520	0.9313	0.9313	27100
23380	Kalamazoo County, Michigan	3720	1.0151	1.0391	28020
23390	Kalkaska County, Michigan	23	0.8813	0.8870	99923
23400	Kent County, Michigan	3000	0.9455	0.9400	24340
23410	Keweenaw County, Michigan	23	0.8813	0.8870	99923
23420	Lake County, Michigan	23	0.8813	0.8870	99923
23430	Lapeer County, Michigan	2160	1.0152	0.9861	47644
23440	Leelanau County, Michigan	23	0.8813	0.8870	99923
23450	Lenawee County, Michigan	0440	1.0718	0.8870	99923
23460	Livingston County, Michigan	0440	1.0718	0.9861	47644
23470	Luce County, Michigan	23	0.8813	0.8870	99923
23480	Mackinac County, Michigan	23	0.8813	0.8870	99923
23490	Macomb County, Michigan	2160	1.0152	0.9861	47644

TABLE A.—MSA/CBSA CROSSWALK—Continued

SSA State/ County Code	County and State Name	MSA Number	2006 MSA-based WI	2006 CBSA-based WI	CBSA Number
23500	Manistee County, Michigan	23	0.8813	0.8870	99923
23510	Marquette County, Michigan	23	0.8813	0.8870	99923
23520	Mason County, Michigan	23	0.8813	0.8870	99923
23530	Mecosta County, Michigan	23	0.8813	0.8870	99923
23540	Menominee County, Michigan	23	0.8813	0.8870	99923
23550	Midland County, Michigan	6960	0.9415	0.8870	99923
23560	Missaukee County, Michigan	23	0.8813	0.8870	99923
23570	Monroe County, Michigan	2160	1.0152	0.9478	33780
23580	Montcalm County, Michigan	23	0.8813	0.8870	99923
23590	Montmorency County, Michigan	23	0.8813	0.8870	99923
23600	Muskegon County, Michigan	3000	0.9455	0.9673	34740
23610	Newaygo County, Michigan	23	0.8813	0.9400	24340
23620	Oakland County, Michigan	2160	1.0152	0.9861	47644
23630	Oceana County, Michigan	23	0.8813	0.8870	99923
23640	Ogemaw County, Michigan	23	0.8813	0.8870	99923
23650	Ontonagon County, Michigan	23	0.8813	0.8870	99923
23660	Osceola County, Michigan	23	0.8813	0.8870	99923
23670	Oscoda County, Michigan	23	0.8813	0.8870	99923
23680	Otsego County, Michigan	23	0.8813	0.8870	99923
23690	Ottawa County, Michigan	3000	0.9455	0.9064	26100
23700	Presque Isle County, Michigan	23	0.8813	0.8870	99923
23710	Roscommon County, Michigan	23	0.8813	0.8870	99923
23720	Saginaw County, Michigan	6960	0.9415	0.9420	40980
23730	St Clair County, Michigan	12160	1.0152	0.9861	47644
23740	St Joseph County, Michigan	23	0.8813	0.8870	99923
23750	Sanilac County, Michigan	23	0.8813	0.8870	99923
23760	Schoolcraft County, Michigan	23	0.8813	0.8870	99923
23770	Shiawassee County, Michigan	23	0.8813	0.8870	99923
23780	Tuscola County, Michigan	23	0.8813	0.8870	99923
23790	Van Buren County, Michigan	3720	1.0151	1.0391	28020
23800	Washtenaw County, Michigan	0440	1.0718	1.0870	11460
23810	Wayne County, Michigan	2160	1.0152	1.0441	19804
23830	Wexford County, Michigan	23	0.8813	0.8870	99923
24000	Aitkin County, Minnesota	24	0.9193	0.9183	99924
24010	Anoka County, Minnesota	5120	1.1078	1.1078	33460
24020	Becker County, Minnesota	24	0.9193	0.9183	99924
24030	Beltrami County, Minnesota	24	0.9193	0.9183	99924
24040	Benton County, Minnesota	6980	0.9975	0.9975	41060
24050	Big Stone County, Minnesota	24	0.9193	0.9183	99924
24060	Blue Earth County, Minnesota	24	0.9193	0.9183	99924
24070	Brown County, Minnesota	24	0.9193	0.9183	99924
24080	Carlton County, Minnesota	24	0.9193	1.0209	20260
24090	Carver County, Minnesota	5120	1.1078	1.1078	33460
24100	Cass County, Minnesota	24	0.9193	0.9183	99924
24110	Chippewa County, Minnesota	24	0.9193	0.9183	99924
24120	Chisago County, Minnesota	5120	1.1078	1.1078	33460
24130	Clay County, Minnesota	2520	0.8495	0.8495	22020
24140	Clearwater County, Minnesota	24	0.9193	0.9183	99924
24150	Cook County, Minnesota	24	0.9193	0.9183	99924
24160	Cottonwood County, Minnesota	24	0.9193	0.9183	99924
24170	Crow Wing County, Minnesota	24	0.9193	0.9183	99924
24180	Dakota County, Minnesota	5120	1.1078	1.1078	33460
24190	Dodge County, Minnesota	24	0.9193	1.1142	40340
24200	Douglas County, Minnesota	24	0.9193	0.9183	99924
24210	Faribault County, Minnesota	24	0.9193	0.9183	99924
24220	Fillmore County, Minnesota	24	0.9193	0.9183	99924
24230	Freeborn County, Minnesota	24	0.9193	0.9183	99924
24240	Goodhue County, Minnesota	24	0.9193	0.9183	99924
24250	Grant County, Minnesota	24	0.9193	0.9183	99924
24260	Hennepin County, Minnesota	5120	1.1078	1.1078	33460
24270	Houston County, Minnesota	3870	0.9573	0.9573	29100
24280	Hubbard County, Minnesota	24	0.9193	0.9183	99924
24290	Isanti County, Minnesota	5120	1.1078	1.1078	33460
24300	Itasca County, Minnesota	24	0.9193	0.9183	99924
24310	Jackson County, Minnesota	24	0.9193	0.9183	99924
24320	Kanabec County, Minnesota	24	0.9193	0.9183	99924
24330	Kandiyohi County, Minnesota	24	0.9193	0.9183	99924
24340	Kittson County, Minnesota	24	0.9193	0.9183	99924
24350	Koochiching County, Minnesota	24	0.9193	0.9183	99924

TABLE A.—MSA/CBSA CROSSWALK—Continued

SSA State/ County Code	County and State Name	MSA Number	2006 MSA-based WI	2006 CBSA-based WI	CBSA Number
24360	Lac Qui Parle County, Minnesota	24	0.9193	0.9183	99924
24370	Lake County, Minnesota	24	0.9193	0.9183	99924
24380	Lake Of Woods County, Minnesota	24	0.9193	0.9183	99924
24390	Le Sueur County, Minnesota	24	0.9193	0.9183	99924
24400	Lincoln County, Minnesota	24	0.9193	0.9183	99924
24410	Lyon County, Minnesota	24	0.9193	0.9183	99924
24420	Mc Leod County, Minnesota	24	0.9193	0.9183	99924
24430	Mahnomen County, Minnesota	24	0.9193	0.9183	99924
24440	Marshall County, Minnesota	24	0.9193	0.9183	99924
24450	Martin County, Minnesota	24	0.9193	0.9183	99924
24460	Meeker County, Minnesota	24	0.9193	0.9183	99924
24470	Mille Lacs County, Minnesota	24	0.9193	0.9183	99924
24480	Morrison County, Minnesota	24	0.9193	0.9183	99924
24490	Mower County, Minnesota	24	0.9193	0.9183	99924
24500	Murray County, Minnesota	24	0.9193	0.9183	99924
24510	Nicollet County, Minnesota	24	0.9193	0.9183	99924
24520	Nobles County, Minnesota	24	0.9193	0.9183	99924
24530	Norman County, Minnesota	24	0.9193	0.9183	99924
24540	Olmsted County, Minnesota	6820	1.1142	1.1142	40340
24550	Otter Tail County, Minnesota	24	0.9193	0.9183	99924
24560	Pennington County, Minnesota	24	0.9193	0.9183	99924
24570	Pine County, Minnesota	24	0.9193	0.9183	99924
24580	Pipestone County, Minnesota	24	0.9193	0.9183	99924
24590	Polk County, Minnesota	2985	1.1516	1.1516	24220
24600	Pope County, Minnesota	24	0.9193	0.9183	99924
24610	Ramsey County, Minnesota	5120	1.1078	1.1078	33460
24620	Red Lake County, Minnesota	24	0.9193	0.9183	99924
24630	Redwood County, Minnesota	24	0.9193	0.9183	99924
24640	Renville County, Minnesota	24	0.9193	0.9183	99924
24650	Rice County, Minnesota	24	0.9193	0.9183	99924
24660	Rock County, Minnesota	24	0.9193	0.9183	99924
24670	Roseau County, Minnesota	24	0.9193	0.9183	99924
24680	St Louis County, Minnesota	2240	1.0223	1.0209	20260
24690	Scott County, Minnesota	5120	1.1078	1.1078	33460
24700	Sherburne County, Minnesota	5120	1.1078	1.1078	33460
24710	Sibley County, Minnesota	24	0.9193	0.9183	99924
24720	Stearns County, Minnesota	6980	0.9975	0.9975	41060
24730	Steele County, Minnesota	24	0.9193	0.9183	99924
24740	Stevens County, Minnesota	24	0.9193	0.9183	99924
24750	Swift County, Minnesota	24	0.9193	0.9183	99924
24760	Todd County, Minnesota	24	0.9193	0.9183	99924
24770	Traverse County, Minnesota	24	0.9193	0.9183	99924
24780	Wabasha County, Minnesota	24	0.9193	1.1142	40340
24790	Wadena County, Minnesota	24	0.9193	0.9183	99924
24800	Waseca County, Minnesota	24	0.9193	0.9183	99924
24810	Washington County, Minnesota	5120	1.1078	1.1078	33460
24820	Watonwan County, Minnesota	24	0.9193	0.9183	99924
24830	Wilkin County, Minnesota	24	0.9193	0.9183	99924
24840	Winona County, Minnesota	24	0.9193	0.9183	99924
24850	Wright County, Minnesota	5120	1.1078	1.1078	33460
24860	Yellow Medicine County, Minnesota	24	0.9193	0.9183	99924
25000	Adams County, Mississippi	25	0.7631	0.7671	99925
25010	Alcorn County, Mississippi	25	0.7631	0.7671	99925
25020	Amite County, Mississippi	25	0.7631	0.7671	99925
25030	Attala County, Mississippi	25	0.7631	0.7671	99925
25040	Benton County, Mississippi	25	0.7631	0.7671	99925
25050	Bolivar County, Mississippi	25	0.7631	0.7671	99925
25060	Calhoun County, Mississippi	25	0.7631	0.7671	99925
25070	Carroll County, Mississippi	25	0.7631	0.7671	99925
25080	Chickasaw County, Mississippi	25	0.7631	0.7671	99925
25090	Choctaw County, Mississippi	25	0.7631	0.7671	99925
25100	Claiborne County, Mississippi	25	0.7631	0.7671	99925
25110	Clarke County, Mississippi	25	0.7631	0.7671	99925
25120	Clay County, Mississippi	25	0.7631	0.7671	99925
25130	Coahoma County, Mississippi	25	0.7631	0.7671	99925
25140	Copiah County, Mississippi	25	0.7631	0.8319	27140
25150	Covington County, Mississippi	25	0.7631	0.7671	99925
25160	Desoto County, Mississippi	4920	0.9360	0.9341	32820
25170	Forrest County, Mississippi	3285	0.7609	0.7609	25620

TABLE A.—MSA/CBSA CROSSWALK—Continued

SSA State/ County Code	County and State Name	MSA Number	2006 MSA-based WI	2006 CBSA-based WI	CBSA Number
25180	Franklin County, Mississippi	25	0.7631	0.7671	99925
25190	George County, Mississippi	25	0.7631	0.8165	37700
25200	Greene County, Mississippi	25	0.7631	0.7671	99925
25210	Grenada County, Mississippi	25	0.7631	0.7671	99925
25220	Hancock County, Mississippi	0920	0.8715	0.8938	25060
25230	Harrison County, Mississippi	0920	0.8715	0.8938	25060
25240	Hinds County, Mississippi	3560	0.8391	0.8319	27140
25250	Holmes County, Mississippi	25	0.7631	0.7671	99925
25260	Humphreys County, Mississippi	25	0.7631	0.7671	99925
25270	Issaquena County, Mississippi	25	0.7631	0.7671	99925
25280	Itawamba County, Mississippi	25	0.7631	0.7671	99925
25290	Jackson County, Mississippi	0920	0.8715	0.8165	37700
25300	Jasper County, Mississippi	25	0.7631	0.7671	99925
25310	Jefferson County, Mississippi	25	0.7631	0.7671	99925
25320	Jefferson Davis County, Mississippi	25	0.7631	0.7671	99925
25330	Jones County, Mississippi	25	0.7631	0.7671	99925
25340	Kemper County, Mississippi	25	0.7631	0.7671	99925
25350	Lafayette County, Mississippi	25	0.7631	0.7671	99925
25360	Lamar County, Mississippi	3285	0.7609	0.7609	25620
25370	Lauderdale County, Mississippi	25	0.7631	0.7671	99925
25380	Lawrence County, Mississippi	25	0.7631	0.7671	99925
25390	Leake County, Mississippi	25	0.7631	0.7671	99925
25400	Lee County, Mississippi	25	0.7631	0.7671	99925
25410	Leflore County, Mississippi	25	0.7631	0.7671	99925
25420	Lincoln County, Mississippi	25	0.7631	0.7671	99925
25430	Lowndes County, Mississippi	25	0.7631	0.7671	99925
25440	Madison County, Mississippi	3560	0.8391	0.8319	27140
25450	Marion County, Mississippi	25	0.7631	0.7671	99925
25460	Marshall County, Mississippi	25	0.7631	0.9341	32820
25470	Monroe County, Mississippi	25	0.7631	0.7671	99925
25480	Montgomery County, Mississippi	25	0.7631	0.7671	99925
25490	Neshoba County, Mississippi	25	0.7631	0.7671	99925
25500	Newton County, Mississippi	25	0.7631	0.7671	99925
25510	Noxubee County, Mississippi	25	0.7631	0.7671	99925
25520	Oktibbeha County, Mississippi	25	0.7631	0.7671	99925
25530	Panola County, Mississippi	25	0.7631	0.7671	99925
25540	Pearl River County, Mississippi	25	0.7631	0.7671	99925
25550	Perry County, Mississippi	25	0.7631	0.7609	25620
25560	Pike County, Mississippi	25	0.7631	0.7671	99925
25570	Pontotoc County, Mississippi	25	0.7631	0.7671	99925
25580	Prentiss County, Mississippi	25	0.7631	0.7671	99925
25590	Quitman County, Mississippi	25	0.7631	0.7671	99925
25600	Rankin County, Mississippi	3560	0.8391	0.8319	27140
25610	Scott County, Mississippi	25	0.7631	0.7671	99925
25620	Sharkey County, Mississippi	25	0.7631	0.7671	99925
25630	Simpson County, Mississippi	25	0.7631	0.8319	27140
25640	Smith County, Mississippi	25	0.7631	0.7671	99925
25650	Stone County, Mississippi	25	0.7631	0.8938	25060
25660	Sunflower County, Mississippi	25	0.7631	0.7671	99925
25670	Tallahatchie County, Mississippi	25	0.7631	0.7671	99925
25680	Tate County, Mississippi	25	0.7631	0.9341	32820
25690	Tippah County, Mississippi	25	0.7631	0.7671	99925
25700	Tishomingo County, Mississippi	25	0.7631	0.7671	99925
25710	Tunica County, Mississippi	25	0.7631	0.9341	32820
25720	Union County, Mississippi	25	0.7631	0.7671	99925
25730	Walthall County, Mississippi	25	0.7631	0.7671	99925
25740	Warren County, Mississippi	25	0.7631	0.7671	99925
25750	Washington County, Mississippi	25	0.7631	0.7671	99925
25760	Wayne County, Mississippi	25	0.7631	0.7671	99925
25770	Webster County, Mississippi	25	0.7631	0.7671	99925
25780	Wilkinson County, Mississippi	25	0.7631	0.7671	99925
25790	Winston County, Mississippi	25	0.7631	0.7671	99925
25800	Yalobusha County, Mississippi	25	0.7631	0.7671	99925
25810	Yazoo County, Mississippi	25	0.7631	0.7671	99925
26000	Adair County, Missouri	26	0.7968	0.7909	99926
26010	Andrew County, Missouri	7000	0.9529	0.9529	41140
26020	Atchison County, Missouri	26	0.7968	0.7909	99926
26030	Audrain County, Missouri	26	0.7968	0.7909	99926
26040	Barry County, Missouri	26	0.7968	0.7909	99926

TABLE A.—MSA/CBSA CROSSWALK—Continued

SSA State/ County Code	County and State Name	MSA Number	2006 MSA-based WI	2006 CBSA-based WI	CBSA Number
26050	Barton County, Missouri	26	0.7968	0.7909	99926
26060	Bates County, Missouri	26	0.7968	0.9467	28140
26070	Benton County, Missouri	26	0.7968	0.7909	99926
26080	Bollinger County, Missouri	26	0.7968	0.7909	99926
26090	Boone County, Missouri	1740	0.8354	0.8354	17860
26100	Buchanan County, Missouri	7000	0.9529	0.9529	41140
26110	Butler County, Missouri	26	0.7968	0.7909	99926
26120	Caldwell County, Missouri	26	0.7968	0.9467	28140
26130	Callaway County, Missouri	26	0.7968	0.8396	27620
26140	Camden County, Missouri	26	0.7968	0.7909	99926
26150	Cape Girardeau County, Missouri	26	0.7968	0.7909	99926
26160	Carroll County, Missouri	26	0.7968	0.7909	99926
26170	Carter County, Missouri	26	0.7968	0.7909	99926
26180	Cass County, Missouri	3760	0.9481	0.9467	28140
26190	Cedar County, Missouri	26	0.7968	0.7909	99926
26200	Chariton County, Missouri	26	0.7968	0.7909	99926
26210	Christian County, Missouri	7920	0.8259	0.8246	44180
26220	Clark County, Missouri	26	0.7968	0.7909	99926
26230	Clay County, Missouri	3760	0.9481	0.9467	28140
26240	Clinton County, Missouri	3760	0.9481	0.9467	28140
26250	Cole County, Missouri	26	0.7968	0.8396	27620
26260	Cooper County, Missouri	26	0.7968	0.7909	99926
26270	Crawford County, Missouri	26	0.7968	0.8949	41180
26280	Dade County, Missouri	26	0.7968	0.7909	99926
26290	Dallas County, Missouri	26	0.7968	0.8246	44180
26300	Daviess County, Missouri	26	0.7968	0.7909	99926
26310	De Kalb County, Missouri	26	0.7968	0.9529	41140
26320	Dent County, Missouri	26	0.7968	0.7909	99926
26330	Douglas County, Missouri	26	0.7968	0.7909	99926
26340	Dunklin County, Missouri	26	0.7968	0.7909	99926
26350	Franklin County, Missouri	7040	0.8957	0.8949	41180
26360	Gasconade County, Missouri	26	0.7968	0.7909	99926
26370	Gentry County, Missouri	26	0.7968	0.7909	99926
26380	Greene County, Missouri	7920	0.8259	0.8246	44180
26390	Grundy County, Missouri	26	0.7968	0.7909	99926
26400	Harrison County, Missouri	26	0.7968	0.7909	99926
26410	Henry County, Missouri	26	0.7968	0.7909	99926
26411	Hickory County, Missouri	26	0.7968	0.7909	99926
26412	Holt County, Missouri	26	0.7968	0.7909	99926
26440	Howard County, Missouri	26	0.7968	0.8354	17860
26450	Howell County, Missouri	26	0.7968	0.7909	99926
26460	Iron County, Missouri	26	0.7968	0.7909	99926
26470	Jackson County, Missouri	3760	0.9481	0.9467	28140
26480	Jasper County, Missouri	3710	0.8590	0.8590	27900
26490	Jefferson County, Missouri	7040	0.8957	0.8949	41180
26500	Johnson County, Missouri	26	0.7968	0.7909	99926
26510	Knox County, Missouri	26	0.7968	0.7909	99926
26520	Laclede County, Missouri	26	0.7968	0.7909	99926
26530	Lafayette County, Missouri	3760	0.9481	0.9467	28140
26540	Lawrence County, Missouri	26	0.7968	0.7909	99926
26541	Lewis County, Missouri	26	0.7968	0.7909	99926
26560	Lincoln County, Missouri	7040	0.8957	0.8949	41180
26570	Linn County, Missouri	26	0.7968	0.7909	99926
26580	Livingston County, Missouri	26	0.7968	0.7909	99926
26590	Mc Donald County, Missouri	26	0.7968	0.8563	22220
26600	Macon County, Missouri	26	0.7968	0.7909	99926
26601	Madison County, Missouri	26	0.7968	0.7909	99926
26620	Maries County, Missouri	26	0.7968	0.7909	99926
26630	Marion County, Missouri	26	0.7968	0.7909	99926
26631	Mercer County, Missouri	26	0.7968	0.7909	99926
26650	Miller County, Missouri	26	0.7968	0.7909	99926
26660	Mississippi County, Missouri	26	0.7968	0.7909	99926
26670	Moniteau County, Missouri	26	0.7968	0.8396	27620
26680	Monroe County, Missouri	26	0.7968	0.7909	99926
26690	Montgomery County, Missouri	26	0.7968	0.7909	99926
26700	Morgan County, Missouri	26	0.7968	0.7909	99926
26710	New Madrid County, Missouri	26	0.7968	0.7909	99926
26720	Newton County, Missouri	3710	0.8590	0.8590	27900
26730	Nodaway County, Missouri	26	0.7968	0.7909	99926

TABLE A.—MSA/CBSA CROSSWALK—Continued

SSA State/ County Code	County and State Name	MSA Number	2006 MSA-based WI	2006 CBSA-based WI	CBSA Number
26740	Oregon County, Missouri	26	0.7968	0.7909	99926
26750	Osage County, Missouri	26	0.7968	0.8396	27620
26751	Ozark County, Missouri	26	0.7968	0.7909	99926
26770	Pemiscot County, Missouri	26	0.7968	0.7909	99926
26780	Perry County, Missouri	26	0.7968	0.7909	99926
26790	Pettis County, Missouri	26	0.7968	0.7909	99926
26800	Phelps County, Missouri	26	0.7968	0.7909	99926
26810	Pike County, Missouri	26	0.7968	0.7909	99926
26820	Platte County, Missouri	3760	0.9481	0.9467	28140
26821	Polk County, Missouri	26	0.7968	0.8246	44180
26840	Pulaski County, Missouri	26	0.7968	0.7909	99926
26850	Putnam County, Missouri	26	0.7968	0.7909	99926
26860	Ralls County, Missouri	26	0.7968	0.7909	99926
26870	Randolph County, Missouri	26	0.7968	0.7909	99926
26880	Ray County, Missouri	3760	0.9481	0.9467	28140
26881	Reynolds County, Missouri	26	0.7968	0.7909	99926
26900	Ripley County, Missouri	26	0.7968	0.7909	99926
26910	St Charles County, Missouri	7040	0.8957	0.8949	41180
26911	St Clair County, Missouri	26	0.7968	0.7909	99926
26930	St Francois County, Missouri	26	0.7968	0.7909	99926
26940	St Louis County, Missouri	7040	0.8957	0.8949	41180
26950	St Louis City County, Missouri	7040	0.8957	0.8949	41180
26960	Ste Genevieve County, Missouri	26	0.7968	0.7909	99926
26970	Saline County, Missouri	26	0.7968	0.7909	99926
26980	Schuyler County, Missouri	26	0.7968	0.7909	99926
26981	Scotland County, Missouri	26	0.7968	0.7909	99926
26982	Scott County, Missouri	26	0.7968	0.7909	99926
26983	Shannon County, Missouri	26	0.7968	0.7909	99926
26984	Shelby County, Missouri	26	0.7968	0.7909	99926
26985	Stoddard County, Missouri	26	0.7968	0.7909	99926
26986	Stone County, Missouri	26	0.7968	0.7909	99926
26987	Sullivan County, Missouri	26	0.7968	0.7909	99926
26988	Taney County, Missouri	26	0.7968	0.7909	99926
26989	Texas County, Missouri	26	0.7968	0.7909	99926
26990	Vernon County, Missouri	26	0.7968	0.7909	99926
26991	Warren County, Missouri	7040	0.8957	0.8949	41180
26992	Washington County, Missouri	26	0.7968	0.8949	41180
26993	Wayne County, Missouri	26	0.7968	0.7909	99926
26994	Webster County, Missouri	7920	0.8259	0.8246	44180
26995	Worth County, Missouri	26	0.7968	0.7909	99926
26996	Wright County, Missouri	26	0.7968	0.7909	99926
27000	Beaverhead County, Montana	27	0.8833	0.8833	99927
27010	Big Horn County, Montana	27	0.8833	0.8833	99927
27020	Blaine County, Montana	27	0.8833	0.8833	99927
27030	Broadwater County, Montana	27	0.8833	0.8833	99927
27040	Carbon County, Montana	27	0.8833	0.8843	13740
27050	Carter County, Montana	27	0.8833	0.8833	99927
27060	Cascade County, Montana	3040	0.9061	0.9061	24500
27070	Chouteau County, Montana	27	0.8833	0.8833	99927
27080	Custer County, Montana	27	0.8833	0.8833	99927
27090	Daniels County, Montana	27	0.8833	0.8833	99927
27100	Dawson County, Montana	27	0.8833	0.8833	99927
27110	Deer Lodge County, Montana	27	0.8833	0.8833	99927
27113	Yellowstone National Park, Montana	27	0.8833	0.8833	99927
27120	Fallon County, Montana	27	0.8833	0.8833	99927
27130	Fergus County, Montana	27	0.8833	0.8833	99927
27140	Flathead County, Montana	27	0.8833	0.8833	99927
27150	Gallatin County, Montana	27	0.8833	0.8833	99927
27160	Garfield County, Montana	27	0.8833	0.8833	99927
27170	Glacier County, Montana	27	0.8833	0.8833	99927
27180	Golden Valley County, Montana	27	0.8833	0.8833	99927
27190	Granite County, Montana	27	0.8833	0.8833	99927
27200	Hill County, Montana	27	0.8833	0.8833	99927
27210	Jefferson County, Montana	27	0.8833	0.8833	99927
27220	Judith Basin County, Montana	27	0.8833	0.8833	99927
27230	Lake County, Montana	27	0.8833	0.8833	99927
27240	Lewis And Clark County, Montana	27	0.8833	0.8833	99927
27250	Liberty County, Montana	27	0.8833	0.8833	99927
27260	Lincoln County, Montana	27	0.8833	0.8833	99927

TABLE A.—MSA/CBSA CROSSWALK—Continued

SSA State/ County Code	County and State Name	MSA Number	2006 MSA-based WI	2006 CBSA-based WI	CBSA Number
27270	Mc Cone County, Montana	27	0.8833	0.8833	99927
27280	Madison County, Montana	27	0.8833	0.8833	99927
27290	Meagher County, Montana	27	0.8833	0.8833	99927
27300	Mineral County, Montana	27	0.8833	0.8833	99927
27310	Missoula County, Montana	5140	0.9482	0.9482	33540
27320	Musselshell County, Montana	27	0.8833	0.8833	99927
27330	Park County, Montana	27	0.8833	0.8833	99927
27340	Petroleum County, Montana	27	0.8833	0.8833	99927
27350	Phillips County, Montana	27	0.8833	0.8833	99927
27360	Pondera County, Montana	27	0.8833	0.8833	99927
27370	Powder River County, Montana	27	0.8833	0.8833	99927
27380	Powell County, Montana	27	0.8833	0.8833	99927
27390	Prairie County, Montana	27	0.8833	0.8833	99927
27400	Ravalli County, Montana	27	0.8833	0.8833	99927
27410	Richland County, Montana	27	0.8833	0.8833	99927
27420	Roosevelt County, Montana	27	0.8833	0.8833	99927
27430	Rosebud County, Montana	27	0.8833	0.8833	99927
27440	Sanders County, Montana	27	0.8833	0.8833	99927
27450	Sheridan County, Montana	27	0.8833	0.8833	99927
27460	Silver Bow County, Montana	27	0.8833	0.8833	99927
27470	Stillwater County, Montana	27	0.8833	0.8833	99927
27480	Sweet Grass County, Montana	27	0.8833	0.8833	99927
27490	Teton County, Montana	27	0.8833	0.8833	99927
27500	Toole County, Montana	27	0.8833	0.8833	99927
27510	Treasure County, Montana	27	0.8833	0.8833	99927
27520	Valley County, Montana	27	0.8833	0.8833	99927
27530	Wheatland County, Montana	27	0.8833	0.8833	99927
27540	Wibaux County, Montana	27	0.8833	0.8833	99927
27550	Yellowstone County, Montana	0880	0.8843	0.8843	13740
28000	Adams County, Nebraska	28	0.8665	0.8665	99928
28010	Antelope County, Nebraska	28	0.8665	0.8665	99928
28020	Arthur County, Nebraska	28	0.8665	0.8665	99928
28030	Banner County, Nebraska	28	0.8665	0.8665	99928
28040	Blaine County, Nebraska	28	0.8665	0.8665	99928
28050	Boone County, Nebraska	28	0.8665	0.8665	99928
28060	Box Butte County, Nebraska	28	0.8665	0.8665	99928
28070	Boyd County, Nebraska	28	0.8665	0.8665	99928
28080	Brown County, Nebraska	28	0.8665	0.8665	99928
28090	Buffalo County, Nebraska	28	0.8665	0.8665	99928
28100	Burt County, Nebraska	28	0.8665	0.8665	99928
28110	Butler County, Nebraska	28	0.8665	0.8665	99928
28120	Cass County, Nebraska	5920	0.9569	0.9569	36540
28130	Cedar County, Nebraska	28	0.8665	0.8665	99928
28140	Chase County, Nebraska	28	0.8665	0.8665	99928
28150	Cherry County, Nebraska	28	0.8665	0.8665	99928
28160	Cheyenne County, Nebraska	28	0.8665	0.8665	99928
28170	Clay County, Nebraska	28	0.8665	0.8665	99928
28180	Colfax County, Nebraska	28	0.8665	0.8665	99928
28190	Cuming County, Nebraska	28	0.8665	0.8665	99928
28200	Custer County, Nebraska	28	0.8665	0.8665	99928
28210	Dakota County, Nebraska	7720	0.9411	0.9376	43580
28220	Dawes County, Nebraska	28	0.8665	0.8665	99928
28230	Dawson County, Nebraska	28	0.8665	0.8665	99928
28240	Deuel County, Nebraska	28	0.8665	0.8665	99928
28250	Dixon County, Nebraska	28	0.8665	0.9376	43580
28260	Dodge County, Nebraska	28	0.8665	0.8665	99928
28270	Douglas County, Nebraska	5920	0.9569	0.9569	36540
28280	Dundy County, Nebraska	28	0.8665	0.8665	99928
28290	Fillmore County, Nebraska	28	0.8665	0.8665	99928
28300	Franklin County, Nebraska	28	0.8665	0.8665	99928
28310	Frontier County, Nebraska	28	0.8665	0.8665	99928
28320	Furnas County, Nebraska	28	0.8665	0.8665	99928
28330	Gage County, Nebraska	28	0.8665	0.8665	99928
28340	Garden County, Nebraska	28	0.8665	0.8665	99928
28350	Garfield County, Nebraska	28	0.8665	0.8665	99928
28360	Gosper County, Nebraska	28	0.8665	0.8665	99928
28370	Grant County, Nebraska	28	0.8665	0.8665	99928
28380	Greeley County, Nebraska	28	0.8665	0.8665	99928
28390	Hall County, Nebraska	28	0.8665	0.8665	99928

TABLE A.—MSA/CBSA CROSSWALK—Continued

SSA State/ County Code	County and State Name	MSA Number	2006 MSA-based WI	2006 CBSA-based WI	CBSA Number
28400	Hamilton County, Nebraska	28	0.8665	0.8665	99928
28410	Harlan County, Nebraska	28	0.8665	0.8665	99928
28420	Hayes County, Nebraska	28	0.8665	0.8665	99928
28430	Hitchcock County, Nebraska	28	0.8665	0.8665	99928
28440	Holt County, Nebraska	28	0.8665	0.8665	99928
28450	Hooker County, Nebraska	28	0.8665	0.8665	99928
28460	Howard County, Nebraska	28	0.8665	0.8665	99928
28470	Jefferson County, Nebraska	28	0.8665	0.8665	99928
28480	Johnson County, Nebraska	28	0.8665	0.8665	99928
28490	Kearney County, Nebraska	28	0.8665	0.8665	99928
28500	Keith County, Nebraska	28	0.8665	0.8665	99928
28510	Keya Paha County, Nebraska	28	0.8665	0.8665	99928
28520	Kimball County, Nebraska	28	0.8665	0.8665	99928
28530	Knox County, Nebraska	28	0.8665	0.8665	99928
28540	Lancaster County, Nebraska	4360	1.0225	1.0225	30700
28550	Lincoln County, Nebraska	28	0.8665	0.8665	99928
28560	Logan County, Nebraska	28	0.8665	0.8665	99928
28570	Loup County, Nebraska	28	0.8665	0.8665	99928
28580	Mc Pherson County, Nebraska	28	0.8665	0.8665	99928
28590	Madison County, Nebraska	28	0.8665	0.8665	99928
28600	Merrick County, Nebraska	28	0.8665	0.8665	99928
28610	Morrill County, Nebraska	28	0.8665	0.8665	99928
28620	Nance County, Nebraska	28	0.8665	0.8665	99928
28630	Nemaha County, Nebraska	28	0.8665	0.8665	99928
28640	Nuckolls County, Nebraska	28	0.8665	0.8665	99928
28650	Otoe County, Nebraska	28	0.8665	0.8665	99928
28660	Pawnee County, Nebraska	28	0.8665	0.8665	99928
28670	Perkins County, Nebraska	28	0.8665	0.8665	99928
28680	Phelps County, Nebraska	28	0.8665	0.8665	99928
28690	Pierce County, Nebraska	28	0.8665	0.8665	99928
28700	Platte County, Nebraska	28	0.8665	0.8665	99928
28710	Polk County, Nebraska	28	0.8665	0.8665	99928
28720	Redwillow County, Nebraska	28	0.8665	0.8665	99928
28730	Richardson County, Nebraska	28	0.8665	0.8665	99928
28740	Rock County, Nebraska	28	0.8665	0.8665	99928
28750	Saline County, Nebraska	28	0.8665	0.8665	99928
28760	Sarpy County, Nebraska	5920	0.9569	0.9569	36540
28770	Saunders County, Nebraska	28	0.8665	0.9569	36540
28780	Scotts Bluff County, Nebraska	28	0.8665	0.8665	99928
28790	Seward County, Nebraska	28	0.8665	1.0225	30700
28800	Sheridan County, Nebraska	28	0.8665	0.8665	99928
28810	Sherman County, Nebraska	28	0.8665	0.8665	99928
28820	Sioux County, Nebraska	28	0.8665	0.8665	99928
28830	Stanton County, Nebraska	28	0.8665	0.8665	99928
28840	Thayer County, Nebraska	28	0.8665	0.8665	99928
28850	Thomas County, Nebraska	28	0.8665	0.8665	99928
28860	Thurston County, Nebraska	28	0.8665	0.8665	99928
28870	Valley County, Nebraska	28	0.8665	0.8665	99928
28880	Washington County, Nebraska	5920	0.9569	0.9569	36540
28890	Wayne County, Nebraska	28	0.8665	0.8665	99928
28900	Webster County, Nebraska	28	0.8665	0.8665	99928
28910	Wheeler County, Nebraska	28	0.8665	0.8665	99928
28920	York County, Nebraska	28	0.8665	0.8665	99928
29000	Churchill County, Nevada	29	0.9697	0.9074	99929
29010	Clark County, Nevada	4120	1.1166	1.1449	29820
29020	Douglas County, Nevada	29	0.9697	0.9074	99929
29030	Elko County, Nevada	29	0.9697	0.9074	99929
29040	Esmeralda County, Nevada	29	0.9697	0.9074	99929
29050	Eureka County, Nevada	29	0.9697	0.9074	99929
29060	Humboldt County, Nevada	29	0.9697	0.9074	99929
29070	Lander County, Nevada	29	0.9697	0.9074	99929
29080	Lincoln County, Nevada	29	0.9697	0.9074	99929
29090	Lyon County, Nevada	29	0.9697	0.9074	99929
29100	Mineral County, Nevada	29	0.9697	0.9074	99929
29110	Nye County, Nevada	4120	1.1166	0.9074	99929
29120	Carson City County, Nevada	29	0.9697	1.0244	16180
29130	Pershing County, Nevada	29	0.9697	0.9074	99929
29140	Storey County, Nevada	29	0.9697	1.0993	39900
29150	Washoe County, Nevada	6720	1.0993	1.0993	39900

TABLE A.—MSA/CBSA CROSSWALK—Continued

SSA State/ County Code	County and State Name	MSA Number	2006 MSA-based WI	2006 CBSA-based WI	CBSA Number
29160	White Pine County, Nevada	29	0.9697	0.9074	99929
30000	Belknap County, New Hampshire	30	1.0677	1.0677	99930
30010	Carroll County, New Hampshire	30	1.0677	1.0677	99930
30020	Cheshire County, New Hampshire	30	1.0677	1.0677	99930
30030	Coos County, New Hampshire	30	1.0677	1.0677	99930
30040	Grafton County, New Hampshire	30	1.0677	1.0677	99930
30050	Hillsboro County, New Hampshire	1123	1.1152	1.0335	31700
30060	Merrimack County, New Hampshire	1123	1.1152	1.0335	31700
30070	Rockingham County, New Hampshire	1123	1.1152	1.0385	40484
30080	Strafford County, New Hampshire	1123	1.1152	1.0385	40484
30090	Sullivan County, New Hampshire	30	1.0677	1.0677	99930
31000	Atlantic County, New Jersey	0560	1.1513	1.1633	12100
31100	Bergen County, New Jersey	0875	1.1660	1.3185	35644
31150	Burlington County, New Jersey	6160	1.0926	1.0528	15804
31160	Camden County, New Jersey	6160	1.0926	1.0528	15804
31180	Cape May County, New Jersey	0560	1.1513	1.1022	36140
31190	Cumberland County, New Jersey	8760	0.9837	0.9837	47220
31200	Essex County, New Jersey	5640	1.2141	1.2195	35084
31220	Gloucester County, New Jersey	6160	1.0926	1.0528	15804
31230	Hudson County, New Jersey	3640	1.1349	1.3185	35644
31250	Hunterdon County, New Jersey	5015	1.1178	1.2195	35084
31260	Mercer County, New Jersey	8480	1.0845	1.0845	45940
31270	Middlesex County, New Jersey	5015	1.1178	1.1260	20764
31290	Monmouth County, New Jersey	5190	1.1271	1.1260	20764
31300	Morris County, New Jersey	5640	1.2141	1.2195	35084
31310	Ocean County, New Jersey	5190	1.1271	1.1260	20764
31320	Passaic County, New Jersey	0875	1.1660	1.3185	35644
31340	Salem County, New Jersey	6160	1.0926	1.0482	48864
31350	Somerset County, New Jersey	5015	1.1178	1.1260	20764
31360	Sussex County, New Jersey	5640	1.2141	1.2195	35084
31370	Union County, New Jersey	5640	1.2141	1.2195	35084
31390	Warren County, New Jersey	5640	1.2141	0.9828	10900
32000	Bernalillo County, New Mexico	0200	0.9693	0.9693	10740
32010	Catron County, New Mexico	32	0.8571	0.8644	99932
32020	Chaves County, New Mexico	32	0.8571	0.8644	99932
32025	Cibola County, New Mexico	32	0.8571	0.8644	99932
32030	Colfax County, New Mexico	32	0.8571	0.8644	99932
32040	Curry County, New Mexico	32	0.8571	0.8644	99932
32050	De Baca County, New Mexico	32	0.8571	0.8644	99932
32060	Dona Ana County, New Mexico	4100	0.8475	0.8475	29740
32070	Eddy County, New Mexico	32	0.8571	0.8644	99932
32080	Grant County, New Mexico	32	0.8571	0.8644	99932
32090	Guadalupe County, New Mexico	32	0.8571	0.8644	99932
32100	Harding County, New Mexico	32	0.8571	0.8644	99932
32110	Hidalgo County, New Mexico	32	0.8571	0.8644	99932
32120	Lea County, New Mexico	32	0.8571	0.8644	99932
32130	Lincoln County, New Mexico	32	0.8571	0.8644	99932
32131	Los Alamos County, New Mexico	7490	1.0759	0.8644	99932
32140	Luna County, New Mexico	32	0.8571	0.8644	99932
32150	Mc Kinley County, New Mexico	32	0.8571	0.8644	99932
32160	Mora County, New Mexico	32	0.8571	0.8644	99932
32170	Otero County, New Mexico	32	0.8571	0.8644	99932
32180	Quay County, New Mexico	32	0.8571	0.8644	99932
32190	Rio Arriba County, New Mexico	32	0.8571	0.8644	99932
32200	Roosevelt County, New Mexico	32	0.8571	0.8644	99932
32210	Sandoval County, New Mexico	0200	0.9693	0.9693	10740
32220	San Juan County, New Mexico	32	0.8571	0.8518	22140
32230	San Miguel County, New Mexico	32	0.8571	0.8644	99932
32240	Santa Fe County, New Mexico	7490	1.0759	1.0931	42140
32250	Sierra County, New Mexico	32	0.8571	0.8644	99932
32260	Socorro County, New Mexico	32	0.8571	0.8644	99932
32270	Taos County, New Mexico	32	0.8571	0.8644	99932
32280	Torrance County, New Mexico	32	0.8571	0.9693	10740
32290	Union County, New Mexico	32	0.8571	0.8644	99932
32300	Valencia County, New Mexico	0200	0.9693	0.9693	10740
33000	Albany County, New York	0160	0.8518	0.8545	10580
33010	Allegany County, New York	33	0.8395	0.8157	99933
33020	Bronx County, New York	5600	1.3465	1.3185	35644
33030	Broome County, New York	0960	0.8571	0.8571	13780

TABLE A.—MSA/CBSA CROSSWALK—Continued

SSA State/ County Code	County and State Name	MSA Number	2006 MSA-based WI	2006 CBSA-based WI	CBSA Number
33040	Cattaraugus County, New York	33	0.8395	0.8157	99933
33050	Cayuga County, New York	8160	0.9499	0.8157	99933
33060	Chautauqua County, New York	3610	0.7552	0.8157	99933
33070	Chemung County, New York	2335	0.8259	0.8259	21300
33080	Chenango County, New York	33	0.8395	0.8157	99933
33090	Clinton County, New York	33	0.8395	0.8157	99933
33200	Columbia County, New York	33	0.8395	0.8157	99933
33210	Cortland County, New York	33	0.8395	0.8157	99933
33220	Delaware County, New York	33	0.8395	0.8157	99933
33230	Dutchess County, New York	2281	1.0183	1.0766	39100
33240	Erie County, New York	1280	0.8889	0.8889	15380
33260	Essex County, New York	33	0.8395	0.8157	99933
33270	Franklin County, New York	33	0.8395	0.8157	99933
33280	Fulton County, New York	33	0.8395	0.8157	99933
33290	Genesee County, New York	6840	0.9044	0.8157	99933
33300	Greene County, New York	33	0.8395	0.8157	99933
33310	Hamilton County, New York	33	0.8395	0.8157	99933
33320	Herkimer County, New York	8680	0.8293	0.8293	46540
33330	Jefferson County, New York	33	0.8395	0.8157	99933
33331	Kings County, New York	5600	1.3465	1.3185	35644
33340	Lewis County, New York	33	0.8395	0.8157	99933
33350	Livingston County, New York	6840	0.9044	0.9115	40380
33360	Madison County, New York	8160	0.9499	0.9581	45060
33370	Monroe County, New York	6840	0.9044	0.9115	40380
33380	Montgomery County, New York	0160	0.8518	0.8157	99933
33400	Nassau County, New York	5380	1.2760	1.2760	35004
33420	New York County, New York	5600	1.3465	1.3185	35644
33500	Niagara County, New York	1280	0.8889	0.8889	15380
33510	Oneida County, New York	8680	0.8293	0.8293	46540
33520	Onondaga County, New York	8160	0.9499	0.9581	45060
33530	Ontario County, New York	6840	0.9044	0.9115	40380
33540	Orange County, New York	5660	1.1218	1.0766	39100
33550	Orleans County, New York	6840	0.9044	0.9115	40380
33560	Oswego County, New York	8160	0.9499	0.9581	45060
33570	Otsego County, New York	33	0.8395	0.8157	99933
33580	Putnam County, New York	5600	1.3465	1.3185	35644
33590	Queens County, New York	5600	1.3465	1.3185	35644
33600	Rensselaer County, New York	0160	0.8518	0.8545	10580
33610	Richmond County, New York	5600	1.3465	1.3185	35644
33620	Rockland County, New York	5600	1.3465	1.3185	35644
33630	St Lawrence County, New York	33	0.8395	0.8157	99933
33640	Saratoga County, New York	0160	0.8518	0.8545	10580
33650	Schenectady County, New York	0160	0.8518	0.8545	10580
33660	Schoharie County, New York	0160	0.8518	0.8545	10580
33670	Schuyler County, New York	33	0.8395	0.8157	99933
33680	Seneca County, New York	33	0.8395	0.8157	99933
33690	Steuben County, New York	33	0.8395	0.8157	99933
33700	Suffolk County, New York	5380	1.2760	1.2760	35004
33710	Sullivan County, New York	33	0.8395	0.8157	99933
33720	Tioga County, New York	0960	0.8571	0.8571	13780
33730	Tompkins County, New York	33	0.8395	0.9803	27060
33740	Ulster County, New York	33	0.8395	0.9257	28740
33750	Warren County, New York	2975	0.8567	0.8567	24020
33760	Washington County, New York	2975	0.8567	0.8567	24020
33770	Wayne County, New York	6840	0.9044	0.9115	40380
33800	Westchester County, New York	5600	1.3465	1.3185	35644
33900	Wyoming County, New York	33	0.8395	0.8157	99933
33910	Yates County, New York	33	0.8395	0.8157	99933
34000	Alamance County, N Carolina	3120	0.9027	0.8914	15500
34010	Alexander County, N Carolina	3290	0.8922	0.8922	25860
34020	Alleghany County, N Carolina	34	0.8490	0.8567	99934
34030	Anson County, N Carolina	34	0.8490	0.9760	16740
34040	Ashe County, N Carolina	34	0.8490	0.8567	99934
34050	Avery County, N Carolina	34	0.8490	0.8567	99934
34060	Beaufort County, N Carolina	34	0.8490	0.8567	99934
34070	Bertie County, N Carolina	34	0.8490	0.8567	99934
34080	Bladen County, N Carolina	34	0.8490	0.8567	99934
34090	Brunswick County, N Carolina	9200	0.9592	0.9592	48900
34100	Buncombe County, N Carolina	0480	0.9747	0.9294	11700

TABLE A.—MSA/CBSA CROSSWALK—Continued

SSA State/ County Code	County and State Name	MSA Number	2006 MSA-based WI	2006 CBSA-based WI	CBSA Number
34110	Burke County, N Carolina	3290	0.8922	0.8922	25860
34120	Cabarrus County, N Carolina	1520	0.9725	0.9760	16740
34130	Caldwell County, N Carolina	3290	0.8922	0.8922	25860
34140	Camden County, N Carolina	34	0.8490	0.8567	99934
34150	Carteret County, N Carolina	34	0.8490	0.8567	99934
34160	Caswell County, N Carolina	34	0.8490	0.8567	99934
34170	Catawba County, N Carolina	3290	0.8922	0.8922	25860
34180	Chatham County, N Carolina	6640	1.0087	1.0303	20500
34190	Cherokee County, N Carolina	34	0.8490	0.8567	99934
34200	Chowan County, N Carolina	34	0.8490	0.8567	99934
34210	Clay County, N Carolina	34	0.8490	0.8567	99934
34220	Cleveland County, N Carolina	34	0.8490	0.8567	99934
34230	Columbus County, N Carolina	34	0.8490	0.8567	99934
34240	Craven County, N Carolina	34	0.8490	0.8567	99934
34250	Cumberland County, N Carolina	2560	0.9426	0.9426	22180
34251	Currituck County, N Carolina	5720	0.8808	0.8808	47260
34270	Dare County, N Carolina	34	0.8490	0.8567	99934
34280	Davidson County, N Carolina	3120	0.9027	0.8567	99934
34290	Davie County, N Carolina	3120	0.9027	0.8953	49180
34300	Duplin County, N Carolina	34	0.8490	0.8567	99934
34310	Durham County, N Carolina	6640	1.0087	1.0303	20500
34320	Edgecombe County, N Carolina	6895	0.8924	0.8924	40580
34330	Forsyth County, N Carolina	3120	0.9027	0.8953	49180
34340	Franklin County, N Carolina	6640	1.0087	0.9733	39580
34350	Gaston County, N Carolina	1520	0.9725	0.9760	16740
34360	Gates County, N Carolina	34	0.8490	0.8567	99934
34370	Graham County, N Carolina	34	0.8490	0.8567	99934
34380	Granville County, N Carolina	34	0.8490	0.8567	99934
34390	Greene County, N Carolina	34	0.8490	0.9434	24780
34400	Guilford County, N Carolina	3120	0.9027	0.9113	24660
34410	Halifax County, N Carolina	34	0.8490	0.8567	99934
34420	Harnett County, N Carolina	34	0.8490	0.8567	99934
34430	Haywood County, N Carolina	34	0.8490	0.9294	11700
34440	Henderson County, N Carolina	34	0.8490	0.9294	11700
34450	Hertford County, N Carolina	34	0.8490	0.8567	99934
34460	Hoke County, N Carolina	34	0.8490	0.9426	22180
34470	Hyde County, N Carolina	34	0.8490	0.8567	99934
34480	Iredell County, N Carolina	34	0.8490	0.8567	99934
34490	Jackson County, N Carolina	34	0.8490	0.8567	99934
34500	Johnston County, N Carolina	6640	1.0087	0.9733	39580
34510	Jones County, N Carolina	34	0.8490	0.8567	99934
34520	Lee County, N Carolina	34	0.8490	0.8567	99934
34530	Lenoir County, N Carolina	34	0.8490	0.8567	99934
34540	Lincoln County, N Carolina	1520	0.9725	0.8567	99934
34550	Mc Dowell County, N Carolina	34	0.8490	0.8567	99934
34560	Macon County, N Carolina	34	0.8490	0.8567	99934
34570	Madison County, N Carolina	0480	0.9747	0.9294	11700
34580	Martin County, N Carolina	34	0.8490	0.8567	99934
34590	Mecklenburg County, N Carolina	1520	0.9725	0.9760	16740
34600	Mitchell County, N Carolina	34	0.8490	0.8567	99934
34610	Montgomery County, N Carolina	34	0.8490	0.8567	99934
34620	Moore County, N Carolina	34	0.8490	0.8567	99934
34630	Nash County, N Carolina	6895	0.8924	0.8924	40580
34640	New Hanover County, N Carolina	9200	0.9592	0.9592	48900
34650	Northampton County, N Carolina	34	0.8490	0.8567	99934
34660	Onslow County, N Carolina	3605	0.8244	0.8244	27340
34670	Orange County, N Carolina	6640	1.0087	1.0303	20500
34680	Pamlico County, N Carolina	34	0.8490	0.8567	99934
34690	Pasquotank County, N Carolina	34	0.8490	0.8567	99934
34700	Pender County, N Carolina	34	0.8490	0.9592	48900
34710	Perquimans County, N Carolina	34	0.8490	0.8567	99934
34720	Person County, N Carolina	34	0.8490	1.0303	20500
34730	Pitt County, N Carolina	3150	0.9434	0.9434	24780
34740	Polk County, N Carolina	34	0.8490	0.8567	99934
34750	Randolph County, N Carolina	3120	0.9027	0.9113	24660
34760	Richmond County, N Carolina	34	0.8490	0.8567	99934
34770	Robeson County, N Carolina	34	0.8490	0.8567	99934
34780	Rockingham County, N Carolina	34	0.8490	0.9113	24660
34790	Rowan County, N Carolina	1520	0.9725	0.8567	99934

TABLE A.—MSA/CBSA CROSSWALK—Continued

SSA State/ County Code	County and State Name	MSA Number	2006 MSA-based WI	2006 CBSA-based WI	CBSA Number
34800	Rutherford County, N Carolina	34	0.8490	0.8567	99934
34810	Sampson County, N Carolina	34	0.8490	0.8567	99934
34820	Scotland County, N Carolina	34	0.8490	0.8567	99934
34830	Stanly County, N Carolina	1520	0.9725	0.9760	16740
34840	Stokes County, N Carolina	3120	0.9027	0.8953	49180
34850	Surry County, N Carolina	34	0.8490	0.8567	99934
34860	Swain County, N Carolina	34	0.8490	0.8567	99934
34870	Transylvania County, N Carolina	34	0.8490	0.8567	99934
34880	Tyrrell County, N Carolina	34	0.8490	0.8567	99934
34890	Union County, N Carolina	1520	0.9725	0.9760	16740
34900	Vance County, N Carolina	34	0.8490	0.8567	99934
34910	Wake County, N Carolina	6640	1.0087	0.9733	39580
34920	Warren County, N Carolina	34	0.8490	0.8567	99934
34930	Washington County, N Carolina	34	0.8490	0.8567	99934
34940	Watauga County, N Carolina	34	0.8490	0.8567	99934
34950	Wayne County, N Carolina	2980	0.8784	0.8784	24140
34960	Wilkes County, N Carolina	34	0.8490	0.8567	99934
34970	Wilson County, N Carolina	34	0.8490	0.8567	99934
34980	Yadkin County, N Carolina	3120	0.9027	0.8953	49180
34981	Yancey County, N Carolina	34	0.8490	0.8567	99934
35000	Adams County, N Dakota	35	0.7268	0.7268	99935
35010	Barnes County, N Dakota	35	0.7268	0.7268	99935
35020	Benson County, N Dakota	35	0.7268	0.7268	99935
35030	Billings County, N Dakota	35	0.7268	0.7268	99935
35040	Bottineau County, N Dakota	35	0.7268	0.7268	99935
35050	Bowman County, N Dakota	35	0.7268	0.7268	99935
35060	Burke County, N Dakota	35	0.7268	0.7268	99935
35070	Burleigh County, N Dakota	1010	0.7519	0.7519	13900
35080	Cass County, N Dakota	2520	0.8495	0.8495	22020
35090	Cavalier County, N Dakota	35	0.7268	0.7268	99935
35100	Dickey County, N Dakota	35	0.7268	0.7268	99935
35110	Divide County, N Dakota	35	0.7268	0.7268	99935
35120	Dunn County, N Dakota	35	0.7268	0.7268	99935
35130	Eddy County, N Dakota	35	0.7268	0.7268	99935
35140	Emmons County, N Dakota	35	0.7268	0.7268	99935
35150	Foster County, N Dakota	35	0.7268	0.7268	99935
35160	Golden Valley County, N Dakota	35	0.7268	0.7268	99935
35170	Grand Forks County, N Dakota	2985	1.1516	1.1516	24220
35180	Grant County, N Dakota	35	0.7268	0.7268	99935
35190	Griggs County, N Dakota	35	0.7268	0.7268	99935
35200	Hettinger County, N Dakota	35	0.7268	0.7268	99935
35210	Kidder County, N Dakota	35	0.7268	0.7268	99935
35220	La Moure County, N Dakota	35	0.7268	0.7268	99935
35230	Logan County, N Dakota	35	0.7268	0.7268	99935
35240	Mc Henry County, N Dakota	35	0.7268	0.7268	99935
35250	Mc Intosh County, N Dakota	35	0.7268	0.7268	99935
35260	Mc Kenzie County, N Dakota	35	0.7268	0.7268	99935
35270	Mc Lean County, N Dakota	35	0.7268	0.7268	99935
35280	Mercer County, N Dakota	35	0.7268	0.7268	99935
35290	Morton County, N Dakota	1010	0.7519	0.7519	13900
35300	Mountrail County, N Dakota	35	0.7268	0.7268	99935
35310	Nelson County, N Dakota	35	0.7268	0.7268	99935
35320	Oliver County, N Dakota	35	0.7268	0.7268	99935
35330	Pembina County, N Dakota	35	0.7268	0.7268	99935
35340	Pierce County, N Dakota	35	0.7268	0.7268	99935
35350	Ramsey County, N Dakota	35	0.7268	0.7268	99935
35360	Ransom County, N Dakota	35	0.7268	0.7268	99935
35370	Renville County, N Dakota	35	0.7268	0.7268	99935
35380	Richland County, N Dakota	35	0.7268	0.7268	99935
35390	Rolette County, N Dakota	35	0.7268	0.7268	99935
35400	Sargent County, N Dakota	35	0.7268	0.7268	99935
35410	Sheridan County, N Dakota	35	0.7268	0.7268	99935
35420	Sioux County, N Dakota	35	0.7268	0.7268	99935
35430	Slope County, N Dakota	35	0.7268	0.7268	99935
35440	Stark County, N Dakota	35	0.7268	0.7268	99935
35450	Steele County, N Dakota	35	0.7268	0.7268	99935
35460	Stutsman County, N Dakota	35	0.7268	0.7268	99935
35470	Towner County, N Dakota	35	0.7268	0.7268	99935
35480	Traill County, N Dakota	35	0.7268	0.7268	99935

TABLE A.—MSA/CBSA CROSSWALK—Continued

SSA State/ County Code	County and State Name	MSA Number	2006 MSA-based WI	2006 CBSA-based WI	CBSA Number
35490	Walsh County, N Dakota	35	0.7268	0.7268	99935
35500	Ward County, N Dakota	35	0.7268	0.7268	99935
35510	Wells County, N Dakota	35	0.7268	0.7268	99935
35520	Williams County, N Dakota	35	0.7268	0.7268	99935
36000	Adams County, Ohio	36	0.8886	0.8786	99936
36010	Allen County, Ohio	4320	0.9128	0.9234	30620
36020	Ashland County, Ohio	36	0.8886	0.8786	99936
36030	Ashtabula County, Ohio	1680	0.9174	0.8786	99936
36040	Athens County, Ohio	36	0.8886	0.8786	99936
36050	Auglaize County, Ohio	4320	0.9128	0.8786	99936
36060	Belmont County, Ohio	9000	0.7168	0.7168	48540
36070	Brown County, Ohio	1640	0.9742	0.9623	17140
36080	Butler County, Ohio	3200	0.8960	0.9623	17140
36090	Carroll County, Ohio	1320	0.8944	0.8944	15940
36100	Champaign County, Ohio	36	0.8886	0.8786	99936
36110	Clark County, Ohio	2000	0.8989	0.8404	44220
36120	Clermont County, Ohio	1640	0.9742	0.9623	17140
36130	Clinton County, Ohio	36	0.8886	0.8786	99936
36140	Columbiana County, Ohio	9320	0.8857	0.8786	99936
36150	Coshocton County, Ohio	36	0.8886	0.8786	99936
36160	Crawford County, Ohio	4800	0.8886	0.8786	99936
36170	Cuyahoga County, Ohio	1680	0.9174	0.9204	17460
36190	Darke County, Ohio	36	0.8886	0.8786	99936
36200	Defiance County, Ohio	36	0.8886	0.8786	99936
36210	Delaware County, Ohio	1840	0.9864	0.9850	18140
36220	Erie County, Ohio	36	0.8886	0.9025	41780
36230	Fairfield County, Ohio	1840	0.9864	0.9850	18140
36240	Fayette County, Ohio	36	0.8886	0.8786	99936
36250	Franklin County, Ohio	1840	0.9864	0.9850	18140
36260	Fulton County, Ohio	8400	0.9584	0.9584	45780
36270	Gallia County, Ohio	36	0.8886	0.8786	99936
36280	Geauga County, Ohio	1680	0.9174	0.9204	17460
36290	Greene County, Ohio	2000	0.8989	0.9073	19380
36300	Guernsey County, Ohio	36	0.8886	0.8786	99936
36310	Hamilton County, Ohio	1640	0.9742	0.9623	17140
36330	Hancock County, Ohio	36	0.8886	0.8786	99936
36340	Hardin County, Ohio	36	0.8886	0.8786	99936
36350	Harrison County, Ohio	36	0.8886	0.8786	99936
36360	Henry County, Ohio	36	0.8886	0.8786	99936
36370	Highland County, Ohio	36	0.8886	0.8786	99936
36380	Hocking County, Ohio	36	0.8886	0.8786	99936
36390	Holmes County, Ohio	36	0.8886	0.8786	99936
36400	Huron County, Ohio	36	0.8886	0.8786	99936
36410	Jackson County, Ohio	36	0.8886	0.8786	99936
36420	Jefferson County, Ohio	8080	0.7827	0.7827	48260
36430	Knox County, Ohio	36	0.8886	0.8786	99936
36440	Lake County, Ohio	1680	0.9174	0.9204	17460
36450	Lawrence County, Ohio	3400	0.9486	0.9486	26580
36460	Licking County, Ohio	1840	0.9864	0.9850	18140
36470	Logan County, Ohio	36	0.8886	0.8786	99936
36480	Lorain County, Ohio	1680	0.9174	0.9204	17460
36490	Lucas County, Ohio	8400	0.9584	0.9584	45780
36500	Madison County, Ohio	1840	0.9864	0.9850	18140
36510	Mahoning County, Ohio	9320	0.8857	0.8611	49660
36520	Marion County, Ohio	36	0.8886	0.8786	99936
36530	Medina County, Ohio	1680	0.9174	0.9204	17460
36540	Meigs County, Ohio	36	0.8886	0.8786	99936
36550	Mercer County, Ohio	36	0.8886	0.8786	99936
36560	Miami County, Ohio	2000	0.8989	0.9073	19380
36570	Monroe County, Ohio	36	0.8886	0.8786	99936
36580	Montgomery County, Ohio	2000	0.8989	0.9073	19380
36590	Morgan County, Ohio	36	0.8886	0.8786	99936
36600	Morrow County, Ohio	36	0.8886	0.9850	18140
36610	Muskingum County, Ohio	36	0.8886	0.8786	99936
36620	Noble County, Ohio	36	0.8886	0.8786	99936
36630	Ottawa County, Ohio	36	0.8886	0.9584	45780
36640	Paulding County, Ohio	36	0.8886	0.8786	99936
36650	Perry County, Ohio	36	0.8886	0.8786	99936
36660	Pickaway County, Ohio	1840	0.9864	0.9850	18140

TABLE A.—MSA/CBSA CROSSWALK—Continued

SSA State/ County Code	County and State Name	MSA Number	2006 MSA-based WI	2006 CBSA-based WI	CBSA Number
36670	Pike County, Ohio	36	0.8886	0.8786	99936
36680	Portage County, Ohio	0080	0.8991	0.8991	10420
36690	Preble County, Ohio	36	0.8886	0.9073	19380
36700	Putnam County, Ohio	36	0.8886	0.8786	99936
36710	Richland County, Ohio	4800	0.8886	0.8887	31900
36720	Ross County, Ohio	36	0.8886	0.8786	99936
36730	Sandusky County, Ohio	36	0.8886	0.8786	99936
36740	Scioto County, Ohio	36	0.8886	0.8786	99936
36750	Seneca County, Ohio	36	0.8886	0.8786	99936
36760	Shelby County, Ohio	36	0.8886	0.8786	99936
36770	Stark County, Ohio	1320	0.8944	0.8944	15940
36780	Summit County, Ohio	0080	0.8991	0.8991	10420
36790	Trumbull County, Ohio	9320	0.8857	0.8611	49660
36800	Tuscarawas County, Ohio	36	0.8886	0.8786	99936
36810	Union County, Ohio	36	0.8886	0.9850	18140
36820	Van Wert County, Ohio	36	0.8886	0.8786	99936
36830	Vinton County, Ohio	36	0.8886	0.8786	99936
36840	Warren County, Ohio	1640	0.9742	0.9623	17140
36850	Washington County, Ohio	6020	0.8278	0.8278	37620
36860	Wayne County, Ohio	36	0.8886	0.8786	99936
36870	Williams County, Ohio	36	0.8886	0.8786	99936
36880	Wood County, Ohio	8400	0.9584	0.9584	45780
36890	Wyandot County, Ohio	36	0.8886	0.8786	99936
37000	Adair County, Oklahoma	37	0.7450	0.7589	99937
37010	Alfalfa County, Oklahoma	37	0.7450	0.7589	99937
37020	Atoka County, Oklahoma	37	0.7450	0.7589	99937
37030	Beaver County, Oklahoma	37	0.7450	0.7589	99937
37040	Beckham County, Oklahoma	37	0.7450	0.7589	99937
37050	Blaine County, Oklahoma	37	0.7450	0.7589	99937
37060	Bryan County, Oklahoma	37	0.7450	0.7589	99937
37070	Caddo County, Oklahoma	37	0.7450	0.7589	99937
37080	Canadian County, Oklahoma	5880	0.9034	0.9040	36420
37090	Carter County, Oklahoma	37	0.7450	0.7589	99937
37100	Cherokee County, Oklahoma	37	0.7450	0.7589	99937
37110	Choctaw County, Oklahoma	37	0.7450	0.7589	99937
37120	Cimarron County, Oklahoma	37	0.7450	0.7589	99937
37130	Cleveland County, Oklahoma	5880	0.9034	0.9040	36420
37140	Coal County, Oklahoma	37	0.7450	0.7589	99937
37150	Comanche County, Oklahoma	4200	0.7880	0.7880	30020
37160	Cotton County, Oklahoma	37	0.7450	0.7589	99937
37170	Craig County, Oklahoma	37	0.7450	0.7589	99937
37180	Creek County, Oklahoma	8560	0.8322	0.8286	46140
37190	Custer County, Oklahoma	37	0.7450	0.7589	99937
37200	Delaware County, Oklahoma	37	0.7450	0.7589	99937
37210	Dewey County, Oklahoma	37	0.7450	0.7589	99937
37220	Ellis County, Oklahoma	37	0.7450	0.7589	99937
37230	Garfield County, Oklahoma	2340	0.8675	0.7589	99937
37240	Garvin County, Oklahoma	37	0.7450	0.7589	99937
37250	Grady County, Oklahoma	37	0.7450	0.9040	36420
37260	Grant County, Oklahoma	37	0.7450	0.7589	99937
37270	Greer County, Oklahoma	37	0.7450	0.7589	99937
37280	Harmon County, Oklahoma	37	0.7450	0.7589	99937
37290	Harper County, Oklahoma	37	0.7450	0.7589	99937
37300	Haskell County, Oklahoma	37	0.7450	0.7589	99937
37310	Hughes County, Oklahoma	37	0.7450	0.7589	99937
37320	Jackson County, Oklahoma	37	0.7450	0.7589	99937
37330	Jefferson County, Oklahoma	37	0.7450	0.7589	99937
37340	Johnston County, Oklahoma	37	0.7450	0.7589	99937
37350	Kay County, Oklahoma	37	0.7450	0.7589	99937
37360	Kingfisher County, Oklahoma	37	0.7450	0.7589	99937
37370	Kiowa County, Oklahoma	37	0.7450	0.7589	99937
37380	Latimer County, Oklahoma	37	0.7450	0.7589	99937
37390	Le Flore County, Oklahoma	37	0.7450	0.8214	22900
37400	Lincoln County, Oklahoma	37	0.7450	0.9040	36420
37410	Logan County, Oklahoma	5880	0.9034	0.9040	36420
37420	Love County, Oklahoma	37	0.7450	0.7589	99937
37430	Mc Clain County, Oklahoma	5880	0.9034	0.9040	36420
37440	Mc Curtain County, Oklahoma	37	0.7450	0.7589	99937
37450	Mc Intosh County, Oklahoma	37	0.7450	0.7589	99937

TABLE A.—MSA/CBSA CROSSWALK—Continued

SSA State/ County Code	County and State Name	MSA Number	2006 MSA-based WI	2006 CBSA-based WI	CBSA Number
37460	Major County, Oklahoma	37	0.7450	0.7589	99937
37470	Marshall County, Oklahoma	37	0.7450	0.7589	99937
37480	Mayes County, Oklahoma	37	0.7450	0.7589	99937
37490	Murray County, Oklahoma	37	0.7450	0.7589	99937
37500	Muskogee County, Oklahoma	37	0.7450	0.7589	99937
37510	Noble County, Oklahoma	37	0.7450	0.7589	99937
37520	Nowata County, Oklahoma	37	0.7450	0.7589	99937
37530	Okfuskee County, Oklahoma	37	0.7450	0.7589	99937
37540	Oklahoma County, Oklahoma	5880	0.9034	0.9040	36420
37550	Okmulgee County, Oklahoma	37	0.7450	0.8286	46140
37560	Osage County, Oklahoma	8560	0.8322	0.8286	46140
37570	Ottawa County, Oklahoma	37	0.7450	0.7589	99937
37580	Pawnee County, Oklahoma	37	0.7450	0.8286	46140
37590	Payne County, Oklahoma	37	0.7450	0.7589	99937
37600	Pittsburg County, Oklahoma	37	0.7450	0.7589	99937
37610	Pontotoc County, Oklahoma	37	0.7450	0.7589	99937
37620	Pottawatomie County, Oklahoma	5880	0.9034	0.7589	99937
37630	Pushmataha County, Oklahoma	37	0.7450	0.7589	99937
37640	Roger Mills County, Oklahoma	37	0.7450	0.7589	99937
37650	Rogers County, Oklahoma	8560	0.8322	0.8286	46140
37660	Seminole County, Oklahoma	37	0.7450	0.7589	99937
37670	Sequoyah County, Oklahoma	2720	0.8229	0.8214	22900
37680	Stephens County, Oklahoma	37	0.7450	0.7589	99937
37690	Texas County, Oklahoma	37	0.7450	0.7589	99937
37700	Tillman County, Oklahoma	37	0.7450	0.7589	99937
37710	Tulsa County, Oklahoma	8560	0.8322	0.8286	46140
37720	Wagoner County, Oklahoma	8560	0.8322	0.8286	46140
37730	Washington County, Oklahoma	37	0.7450	0.7589	99937
37740	Washita County, Oklahoma	37	0.7450	0.7589	99937
37750	Woods County, Oklahoma	37	0.7450	0.7589	99937
37760	Woodward County, Oklahoma	37	0.7450	0.7589	99937
38000	Baker County, Oregon	38	1.0057	0.9830	99938
38010	Benton County, Oregon	1890	1.0739	1.0739	18700
38020	Clackamas County, Oregon	6440	1.1260	1.1260	38900
38030	Clatsop County, Oregon	38	1.0057	0.9830	99938
38040	Columbia County, Oregon	6440	1.1260	1.1260	38900
38050	Coos County, Oregon	38	1.0057	0.9830	99938
38060	Crook County, Oregon	38	1.0057	0.9830	99938
38070	Curry County, Oregon	38	1.0057	0.9830	99938
38080	Deschutes County, Oregon	38	1.0057	1.0796	13460
38090	Douglas County, Oregon	38	1.0057	0.9830	99938
38100	Gilliam County, Oregon	38	1.0057	0.9830	99938
38110	Grant County, Oregon	38	1.0057	0.9830	99938
38120	Harney County, Oregon	38	1.0057	0.9830	99938
38130	Hood River County, Oregon	38	1.0057	0.9830	99938
38140	Jackson County, Oregon	4890	1.0235	1.0235	32780
38150	Jefferson County, Oregon	38	1.0057	0.9830	99938
38160	Josephine County, Oregon	38	1.0057	0.9830	99938
38170	Klamath County, Oregon	38	1.0057	0.9830	99938
38180	Lake County, Oregon	38	1.0057	0.9830	99938
38190	Lane County, Oregon	2400	1.0829	1.0829	21660
38200	Lincoln County, Oregon	38	1.0057	0.9830	99938
38210	Linn County, Oregon	38	1.0057	0.9830	99938
38220	Malheur County, Oregon	38	1.0057	0.9830	99938
38230	Marion County, Oregon	7080	1.0452	1.0452	41420
38240	Morrow County, Oregon	38	1.0057	0.9830	99938
38250	Multnomah County, Oregon	6440	1.1260	1.1260	38900
38260	Polk County, Oregon	7080	1.0452	1.0452	41420
38270	Sherman County, Oregon	38	1.0057	0.9830	99938
38280	Tillamook County, Oregon	38	1.0057	0.9830	99938
38290	Umatilla County, Oregon	38	1.0057	0.9830	99938
38300	Union County, Oregon	38	1.0057	0.9830	99938
38310	Wallowa County, Oregon	38	1.0057	0.9830	99938
38320	Wasco County, Oregon	38	1.0057	0.9830	99938
38330	Washington County, Oregon	6440	1.1260	1.1260	38900
38340	Wheeler County, Oregon	38	1.0057	0.9830	99938
38350	Yamhill County, Oregon	6440	1.1260	1.1260	38900
39000	Adams County, Pennsylvania	39	0.8331	0.8302	99939
39010	Allegheny County, Pennsylvania	6280	0.8868	0.8853	38300

TABLE A.—MSA/CBSA CROSSWALK—Continued

SSA State/ County Code	County and State Name	MSA Number	2006 MSA-based WI	2006 CBSA-based WI	CBSA Number
39070	Armstrong County, Pennsylvania	39	0.8331	0.8853	38300
39080	Beaver County, Pennsylvania	6280	0.8868	0.8853	38300
39100	Bedford County, Pennsylvania	39	0.8331	0.8302	99939
39110	Berks County, Pennsylvania	6680	0.9696	0.9696	39740
39120	Blair County, Pennsylvania	0280	0.8953	0.8953	11020
39130	Bradford County, Pennsylvania	39	0.8331	0.8302	99939
39140	Bucks County, Pennsylvania	6160	1.0926	1.1040	37964
39150	Butler County, Pennsylvania	6280	0.8868	0.8853	38300
39160	Cambria County, Pennsylvania	3680	0.8094	0.8362	27780
39180	Cameron County, Pennsylvania	39	0.8331	0.8302	99939
39190	Carbon County, Pennsylvania	0240	0.9855	0.9828	10900
39200	Centre County, Pennsylvania	8050	0.8364	0.8364	44300
39210	Chester County, Pennsylvania	6160	1.0926	1.1040	37964
39220	Clarion County, Pennsylvania	39	0.8331	0.8302	99939
39230	Clearfield County, Pennsylvania	39	0.8331	0.8302	99939
39240	Clinton County, Pennsylvania	39	0.8331	0.8302	99939
39250	Columbia County, Pennsylvania	7560	0.8533	0.8302	99939
39260	Crawford County, Pennsylvania	39	0.8331	0.8302	99939
39270	Cumberland County, Pennsylvania	3240	0.9242	0.9322	25420
39280	Dauphin County, Pennsylvania	3240	0.9242	0.9322	25420
39290	Delaware County, Pennsylvania	6160	1.0926	1.1040	37964
39310	Elk County, Pennsylvania	39	0.8331	0.8302	99939
39320	Erie County, Pennsylvania	2360	0.8746	0.8746	21500
39330	Fayette County, Pennsylvania	6280	0.8868	0.8853	38300
39340	Forest County, Pennsylvania	39	0.8331	0.8302	99939
39350	Franklin County, Pennsylvania	39	0.8331	0.8302	99939
39360	Fulton County, Pennsylvania	39	0.8331	0.8302	99939
39370	Greene County, Pennsylvania	39	0.8331	0.8302	99939
39380	Huntingdon County, Pennsylvania	39	0.8331	0.8302	99939
39390	Indiana County, Pennsylvania	39	0.8331	0.8302	99939
39400	Jefferson County, Pennsylvania	39	0.8331	0.8302	99939
39410	Juniata County, Pennsylvania	39	0.8331	0.8302	99939
39420	Lackawanna County, Pennsylvania	7560	0.8533	0.8548	42540
39440	Lancaster County, Pennsylvania	4000	0.9704	0.9704	29540
39450	Lawrence County, Pennsylvania	39	0.8331	0.8302	99939
39460	Lebanon County, Pennsylvania	3240	0.9242	0.8468	30140
39470	Lehigh County, Pennsylvania	0240	0.9855	0.9828	10900
39480	Luzerne County, Pennsylvania	7560	0.8533	0.8548	42540
39510	Lycoming County, Pennsylvania	9140	0.8377	0.8377	48700
39520	Mc Kean County, Pennsylvania	39	0.8331	0.8302	99939
39530	Mercer County, Pennsylvania	7610	0.7801	0.8611	49660
39540	Mifflin County, Pennsylvania	39	0.8331	0.8302	99939
39550	Monroe County, Pennsylvania	39	0.8331	0.8302	99939
39560	Montgomery County, Pennsylvania	6160	1.0926	1.1040	37964
39580	Montour County, Pennsylvania	39	0.8331	0.8302	99939
39590	Northampton County, Pennsylvania	0240	0.9855	0.9828	10900
39600	Northumberland County, Pennsylvania	39	0.8331	0.8302	99939
39610	Perry County, Pennsylvania	3240	0.9242	0.9322	25420
39620	Philadelphia County, Pennsylvania	6160	1.0926	1.1040	37964
39630	Pike County, Pennsylvania	5660	1.1218	1.2195	35084
39640	Potter County, Pennsylvania	39	0.8331	0.8302	99939
39650	Schuylkill County, Pennsylvania	39	0.8331	0.8302	99939
39670	Snyder County, Pennsylvania	39	0.8331	0.8302	99939
39680	Somerset County, Pennsylvania	3680	0.8094	0.8302	99939
39690	Sullivan County, Pennsylvania	39	0.8331	0.8302	99939
39700	Susquehanna County, Pennsylvania	39	0.8331	0.8302	99939
39710	Tioga County, Pennsylvania	39	0.8331	0.8302	99939
39720	Union County, Pennsylvania	39	0.8331	0.8302	99939
39730	Venango County, Pennsylvania	39	0.8331	0.8302	99939
39740	Warren County, Pennsylvania	39	0.8331	0.8302	99939
39750	Washington County, Pennsylvania	6280	0.8868	0.8853	38300
39760	Wayne County, Pennsylvania	39	0.8331	0.8302	99939
39770	Westmoreland County, Pennsylvania	6280	0.8868	0.8853	38300
39790	Wyoming County, Pennsylvania	7560	0.8533	0.8548	42540
39800	York County, Pennsylvania	9280	0.9420	0.9420	49620
40010	Adjuntas County, Puerto Rico	40	0.3608	0.4047	99940
40020	Aguada County, Puerto Rico	0060	0.4881	0.4743	10380
40030	Aguadilla County, Puerto Rico	0060	0.4881	0.4743	10380
40040	Aguas Buenas County, Puerto Rico	7440	0.4855	0.4686	41980

TABLE A.—MSA/CBSA CROSSWALK—Continued

SSA State/ County Code	County and State Name	MSA Number	2006 MSA-based WI	2006 CBSA-based WI	CBSA Number
40050	Aibonito County, Puerto Rico	40	0.3608	0.4686	41980
40060	Anasco County, Puerto Rico	4840	0.4246	0.4743	10380
40070	Arecibo County, Puerto Rico	0470	0.4116	0.4686	41980
40080	Arroyo County, Puerto Rico	40	0.3608	0.3184	25020
40090	Barceloneta County, Puerto Rico	7440	0.4855	0.4686	41980
40100	Barranquitas County, Puerto Rico	40	0.3608	0.4686	41980
40110	Bayamon County, Puerto Rico	7440	0.4855	0.4686	41980
40120	Cabo Rojo County, Puerto Rico	4840	0.4246	0.4655	41900
40130	Caguas County, Puerto Rico	1310	0.4020	0.4686	41980
40140	Camuy County, Puerto Rico	0470	0.4116	0.4686	41980
40145	Canovanas County, Puerto Rico	7440	0.4855	0.4686	41980
40150	Carolina County, Puerto Rico	7440	0.4855	0.4686	41980
40160	Catano County, Puerto Rico	7440	0.4855	0.4686	41980
40170	Cayey County, Puerto Rico	1310	0.4020	0.4686	41980
40180	Ceiba County, Puerto Rico	7440	0.4855	0.4157	21940
40190	Ciales County, Puerto Rico	40	0.3608	0.4686	41980
40200	Cidra County, Puerto Rico	1310	0.4020	0.4686	41980
40210	Coamo County, Puerto Rico	40	0.3608	0.4047	99940
40220	Comerio County, Puerto Rico	7440	0.4855	0.4686	41980
40230	Corozal County, Puerto Rico	7440	0.4855	0.4686	41980
40240	Culebra County, Puerto Rico	40	0.3608	0.4047	99940
40250	Dorado County, Puerto Rico	7440	0.4855	0.4686	41980
40260	Fajardo County, Puerto Rico	7440	0.4855	0.4157	21940
40265	Florida County, Puerto Rico	7440	0.4855	0.4686	41980
40270	Guanica County, Puerto Rico	40	0.3608	0.4413	49500
40280	Guayama County, Puerto Rico	40	0.3608	0.3184	25020
40290	Guayanilla County, Puerto Rico	6360	0.5091	0.4413	49500
40300	Guaynabo County, Puerto Rico	7440	0.4855	0.4686	41980
40310	Gurabo County, Puerto Rico	1310	0.4020	0.4686	41980
40320	Hatillo County, Puerto Rico	0470	0.4116	0.4686	41980
40330	Hormigueros County, Puerto Rico	4840	0.4246	0.4017	32420
40340	Humacao County, Puerto Rico	7440	0.4855	0.4686	41980
40350	Isabela County, Puerto Rico	40	0.3608	0.4743	10380
40360	Jayuya County, Puerto Rico	40	0.3608	0.4047	99940
40370	Juana Diaz County, Puerto Rico	6360	0.5091	0.5177	38660
40380	Juncos County, Puerto Rico	7440	0.4855	0.4686	41980
40390	Lajas County, Puerto Rico	40	0.3608	0.4655	41900
40400	Lares County, Puerto Rico	40	0.3608	0.4743	10380
40410	Las Marias County, Puerto Rico	40	0.3608	0.4047	99940
40420	Las Piedras County, Puerto Rico	7440	0.4855	0.4686	41980
40430	Loiza County, Puerto Rico	7440	0.4855	0.4686	41980
40440	Luquillo County, Puerto Rico	7440	0.4855	0.4157	21940
40450	Manati County, Puerto Rico	7440	0.4855	0.4686	41980
40460	Maricao County, Puerto Rico	40	0.3608	0.4047	99940
40470	Maunabo County, Puerto Rico	40	0.3608	0.4686	41980
40480	Mayaguez County, Puerto Rico	4840	0.4246	0.4017	32420
40490	Moca County, Puerto Rico	0060	0.4881	0.4743	10380
40500	Morovis County, Puerto Rico	7440	0.4855	0.4686	41980
40510	Naguabo County, Puerto Rico	7440	0.4855	0.4686	41980
40520	Naranjito County, Puerto Rico	7440	0.4855	0.4686	41980
40530	Orocovis County, Puerto Rico	40	0.3608	0.4686	41980
40540	Patillas County, Puerto Rico	40	0.3608	0.3184	25020
40550	Penuelas County, Puerto Rico	6360	0.5091	0.4413	49500
40560	Ponce County, Puerto Rico	6360	0.5091	0.5177	38660
40570	Quebradillas County, Puerto Rico	40	0.3608	0.4686	41980
40580	Rincon County, Puerto Rico	40	0.3608	0.4743	10380
40590	Rio Grande County, Puerto Rico	7440	0.4855	0.4686	41980
40610	Sabana Grande County, Puerto Rico	4840	0.4246	0.4655	41900
40620	Salinas County, Puerto Rico	40	0.3608	0.4047	99940
40630	San German County, Puerto Rico	4840	0.4246	0.4655	41900
40640	San Juan County, Puerto Rico	7440	0.4855	0.4686	41980
40650	San Lorenzo County, Puerto Rico	1310	0.4020	0.4686	41980
40660	San Sebastian County, Puerto Rico	40	0.3608	0.4743	10380
40670	Santa Isabel County, Puerto Rico	40	0.3608	0.4047	99940
40680	Toa Alta County, Puerto Rico	7440	0.4855	0.4686	41980
40690	Toa Baja County, Puerto Rico	7440	0.4855	0.4686	41980
40700	Trujillo Alto County, Puerto Rico	7440	0.4855	0.4686	41980
40710	Utuado County, Puerto Rico	40	0.3608	0.4047	99940
40720	Vega Alta County, Puerto Rico	7440	0.4855	0.4686	41980

TABLE A.—MSA/CBSA CROSSWALK—Continued

SSA State/ County Code	County and State Name	MSA Number	2006 MSA-based WI	2006 CBSA-based WI	CBSA Number
40730	Vega Baja County, Puerto Rico	7440	0.4855	0.4686	41980
40740	Vieques County, Puerto Rico	40	0.3608	0.4047	99940
40750	Villalba County, Puerto Rico	6360	0.5091	0.5177	38660
40760	Yabucoa County, Puerto Rico	7440	0.4855	0.4686	41980
40770	Yauco County, Puerto Rico	6360	0.5091	0.4413	49500
41000	Bristol County, Rhode Island	6483	1.1060	1.0966	39300
41010	Kent County, Rhode Island	6483	1.1060	1.0966	39300
41020	Newport County, Rhode Island	6483	1.1060	1.0966	39300
41030	Providence County, Rhode Island	6483	1.1060	1.0966	39300
41050	Washington County, Rhode Island	6483	1.1060	1.0966	39300
42000	Abbeville County, S Carolina	42	0.8634	0.8641	99942
42010	Aiken County, S Carolina	0600	0.9619	0.9565	12260
42020	Allendale County, S Carolina	42	0.8634	0.8641	99942
42030	Anderson County, S Carolina	3160	0.9677	0.8897	11340
42040	Bamberg County, S Carolina	42	0.8634	0.8641	99942
42050	Barnwell County, S Carolina	42	0.8634	0.8641	99942
42060	Beaufort County, S Carolina	42	0.8634	0.8641	99942
42070	Berkeley County, S Carolina	1440	0.9438	0.9438	16700
42080	Calhoun County, S Carolina	42	0.8634	0.9047	17900
42090	Charleston County, S Carolina	1440	0.9438	0.9438	16700
42100	Cherokee County, S Carolina	3160	0.9677	0.8641	99942
42110	Chester County, S Carolina	42	0.8634	0.8641	99942
42120	Chesterfield County, S Carolina	42	0.8634	0.8641	99942
42130	Clarendon County, S Carolina	42	0.8634	0.8641	99942
42140	Colleton County, S Carolina	42	0.8634	0.8641	99942
42150	Darlington County, S Carolina	42	0.8634	0.8964	22500
42160	Dillon County, S Carolina	42	0.8634	0.8641	99942
42170	Dorchester County, S Carolina	1440	0.9438	0.9438	16700
42180	Edgefield County, S Carolina	0600	0.9619	0.9565	12260
42190	Fairfield County, S Carolina	42	0.8634	0.9047	17900
42200	Florence County, S Carolina	2655	0.9060	0.8964	22500
42210	Georgetown County, S Carolina	42	0.8634	0.8641	99942
42220	Greenville County, S Carolina	3160	0.9677	1.0165	24860
42230	Greenwood County, S Carolina	42	0.8634	0.8641	99942
42240	Hampton County, S Carolina	42	0.8634	0.8641	99942
42250	Horry County, S Carolina	5330	0.8873	0.8873	34820
42260	Jasper County, S Carolina	42	0.8634	0.8641	99942
42270	Kershaw County, S Carolina	42	0.8634	0.9047	17900
42280	Lancaster County, S Carolina	42	0.8634	0.8641	99942
42290	Laurens County, S Carolina	42	0.8634	1.0165	24860
42300	Lee County, S Carolina	42	0.8634	0.8641	99942
42310	Lexington County, S Carolina	1760	0.9071	0.9047	17900
42320	Mc Cormick County, S Carolina	42	0.8634	0.8641	99942
42330	Marion County, S Carolina	42	0.8634	0.8641	99942
42340	Marlboro County, S Carolina	42	0.8634	0.8641	99942
42350	Newberry County, S Carolina	42	0.8634	0.8641	99942
42360	Oconee County, S Carolina	42	0.8634	0.8641	99942
42370	Orangeburg County, S Carolina	42	0.8634	0.8641	99942
42380	Pickens County, S Carolina	3160	0.9677	1.0165	24860
42390	Richland County, S Carolina	1760	0.9071	0.9047	17900
42400	Saluda County, S Carolina	42	0.8634	0.9047	17900
42410	Spartanburg County, S Carolina	3160	0.9677	0.9181	43900
42420	Sumter County, S Carolina	8140	0.8386	0.8386	44940
42430	Union County, S Carolina	42	0.8634	0.8641	99942
42440	Williamsburg County, S Carolina	42	0.8634	0.8641	99942
42450	York County, S Carolina	1520	0.9725	0.9760	16740
43010	Aurora County, S Dakota	43	0.8476	0.8484	99943
43020	Beadle County, S Dakota	43	0.8476	0.8484	99943
43030	Bennett County, S Dakota	43	0.8476	0.8484	99943
43040	Bon Homme County, S Dakota	43	0.8476	0.8484	99943
43050	Brookings County, S Dakota	43	0.8476	0.8484	99943
43060	Brown County, S Dakota	43	0.8476	0.8484	99943
43070	Brule County, S Dakota	43	0.8476	0.8484	99943
43080	Buffalo County, S Dakota	43	0.8476	0.8484	99943
43090	Butte County, S Dakota	43	0.8476	0.8484	99943
43100	Campbell County, S Dakota	43	0.8476	0.8484	99943
43110	Charles Mix County, S Dakota	43	0.8476	0.8484	99943
43120	Clark County, S Dakota	43	0.8476	0.8484	99943
43130	Clay County, S Dakota	43	0.8476	0.8484	99943

TABLE A.—MSA/CBSA CROSSWALK—Continued

SSA State/ County Code	County and State Name	MSA Number	2006 MSA-based WI	2006 CBSA-based WI	CBSA Number
43140	Codington County, S Dakota	43	0.8476	0.8484	99943
43150	Corson County, S Dakota	43	0.8476	0.8484	99943
43160	Custer County, S Dakota	43	0.8476	0.8484	99943
43170	Davison County, S Dakota	43	0.8476	0.8484	99943
43180	Day County, S Dakota	43	0.8476	0.8484	99943
43190	Deuel County, S Dakota	43	0.8476	0.8484	99943
43200	Dewey County, S Dakota	43	0.8476	0.8484	99943
43210	Douglas County, S Dakota	43	0.8476	0.8484	99943
43220	Edmunds County, S Dakota	43	0.8476	0.8484	99943
43230	Fall River County, S Dakota	43	0.8476	0.8484	99943
43240	Faulk County, S Dakota	43	0.8476	0.8484	99943
43250	Grant County, S Dakota	43	0.8476	0.8484	99943
43260	Gregory County, S Dakota	43	0.8476	0.8484	99943
43270	Haakon County, S Dakota	43	0.8476	0.8484	99943
43280	Hamlin County, S Dakota	43	0.8476	0.8484	99943
43290	Hand County, S Dakota	43	0.8476	0.8484	99943
43300	Hanson County, S Dakota	43	0.8476	0.8484	99943
43310	Harding County, S Dakota	43	0.8476	0.8484	99943
43320	Hughes County, S Dakota	43	0.8476	0.8484	99943
43330	Hutchinson County, S Dakota	43	0.8476	0.8484	99943
43340	Hyde County, S Dakota	43	0.8476	0.8484	99943
43350	Jackson County, S Dakota	43	0.8476	0.8484	99943
43360	Jerauld County, S Dakota	43	0.8476	0.8484	99943
43370	Jones County, S Dakota	43	0.8476	0.8484	99943
43380	Kingsbury County, S Dakota	43	0.8476	0.8484	99943
43390	Lake County, S Dakota	43	0.8476	0.8484	99943
43400	Lawrence County, S Dakota	43	0.8476	0.8484	99943
43410	Lincoln County, S Dakota	7760	0.9645	0.9645	43620
43420	Lyman County, S Dakota	43	0.8476	0.8484	99943
43430	Mc Cook County, S Dakota	43	0.8476	0.9645	43620
43440	Mc Pherson County, S Dakota	43	0.8476	0.8484	99943
43450	Marshall County, S Dakota	43	0.8476	0.8484	99943
43460	Meade County, S Dakota	43	0.8476	0.9021	39660
43470	Mellette County, S Dakota	43	0.8476	0.8484	99943
43480	Miner County, S Dakota	43	0.8476	0.8484	99943
43490	Minnehaha County, S Dakota	7760	0.9645	0.9645	43620
43500	Moody County, S Dakota	43	0.8476	0.8484	99943
43510	Pennington County, S Dakota	6660	0.9021	0.9021	39660
43520	Perkins County, S Dakota	43	0.8476	0.8484	99943
43530	Potter County, S Dakota	43	0.8476	0.8484	99943
43540	Roberts County, S Dakota	43	0.8476	0.8484	99943
43550	Sanborn County, S Dakota	43	0.8476	0.8484	99943
43560	Shannon County, S Dakota	43	0.8476	0.8484	99943
43570	Spink County, S Dakota	43	0.8476	0.8484	99943
43580	Stanley County, S Dakota	43	0.8476	0.8484	99943
43590	Sully County, S Dakota	43	0.8476	0.8484	99943
43600	Todd County, S Dakota	43	0.8476	0.8484	99943
43610	Tripp County, S Dakota	43	0.8476	0.8484	99943
43620	Turner County, S Dakota	43	0.8476	0.9645	43620
43630	Union County, S Dakota	43	0.8476	0.9376	43580
43640	Walworth County, S Dakota	43	0.8476	0.8484	99943
43650	Washabaugh County, S Dakota	43	0.8476	0.8484	99943
43670	Yankton County, S Dakota	43	0.8476	0.8484	99943
43680	Ziebach County, S Dakota	43	0.8476	0.8484	99943
44000	Anderson County, Tennessee	3840	0.8411	0.8454	28940
44010	Bedford County, Tennessee	44	0.7988	0.7888	99944
44020	Benton County, Tennessee	44	0.7988	0.7888	99944
44030	Bledsoe County, Tennessee	44	0.7988	0.7888	99944
44040	Blount County, Tennessee	3840	0.8411	0.8454	28940
44050	Bradley County, Tennessee	44	0.7988	0.8141	17420
44060	Campbell County, Tennessee	44	0.7988	0.7888	99944
44070	Cannon County, Tennessee	44	0.7988	0.9769	34980
44080	Carroll County, Tennessee	44	0.7988	0.7888	99944
44090	Carter County, Tennessee	3660	0.8015	0.7945	27740
44100	Cheatham County, Tennessee	5360	0.9787	0.9769	34980
44110	Chester County, Tennessee	3580	0.8973	0.8973	27180
44120	Claiborne County, Tennessee	44	0.7988	0.7888	99944
44130	Clay County, Tennessee	44	0.7988	0.7888	99944
44140	Cocke County, Tennessee	44	0.7988	0.7888	99944

TABLE A.—MSA/CBSA CROSSWALK—Continued

SSA State/ County Code	County and State Name	MSA Number	2006 MSA-based WI	2006 CBSA-based WI	CBSA Number
44150	Coffee County, Tennessee	44	0.7988	0.7888	99944
44160	Crockett County, Tennessee	44	0.7988	0.7888	99944
44170	Cumberland County, Tennessee	44	0.7988	0.7888	99944
44180	Davidson County, Tennessee	5360	0.9787	0.9769	34980
44190	Decatur County, Tennessee	44	0.7988	0.7888	99944
44200	De Kalb County, Tennessee	44	0.7988	0.7888	99944
44210	Dickson County, Tennessee	5360	0.9787	0.9769	34980
44220	Dyer County, Tennessee	44	0.7988	0.7888	99944
44230	Fayette County, Tennessee	4920	0.9360	0.9341	32820
44240	Fentress County, Tennessee	44	0.7988	0.7888	99944
44250	Franklin County, Tennessee	44	0.7988	0.7888	99944
44260	Gibson County, Tennessee	44	0.7988	0.7888	99944
44270	Giles County, Tennessee	44	0.7988	0.7888	99944
44280	Grainger County, Tennessee	44	0.7988	0.8753	34100
44290	Greene County, Tennessee	44	0.7988	0.7888	99944
44300	Grundy County, Tennessee	44	0.7988	0.7888	99944
44310	Hamblen County, Tennessee	44	0.7988	0.8753	34100
44320	Hamilton County, Tennessee	1560	0.9098	0.9098	16860
44330	Hancock County, Tennessee	44	0.7988	0.7888	99944
44340	Hardeman County, Tennessee	44	0.7988	0.7888	99944
44350	Hardin County, Tennessee	44	0.7988	0.7888	99944
44360	Hawkins County, Tennessee	3660	0.8015	0.8062	28700
44370	Haywood County, Tennessee	44	0.7988	0.7888	99944
44380	Henderson County, Tennessee	44	0.7988	0.7888	99944
44390	Henry County, Tennessee	44	0.7988	0.7888	99944
44400	Hickman County, Tennessee	44	0.7988	0.9769	34980
44410	Houston County, Tennessee	44	0.7988	0.7888	99944
44420	Humphreys County, Tennessee	44	0.7988	0.7888	99944
44430	Jackson County, Tennessee	44	0.7988	0.7888	99944
44440	Jefferson County, Tennessee	44	0.7988	0.8753	34100
44450	Johnson County, Tennessee	44	0.7988	0.7888	99944
44460	Knox County, Tennessee	3840	0.8411	0.8454	28940
44470	Lake County, Tennessee	44	0.7988	0.7888	99944
44480	Lauderdale County, Tennessee	44	0.7988	0.7888	99944
44490	Lawrence County, Tennessee	44	0.7988	0.7888	99944
44500	Lewis County, Tennessee	44	0.7988	0.7888	99944
44510	Lincoln County, Tennessee	44	0.7988	0.7888	99944
44520	Loudon County, Tennessee	3840	0.8411	0.8454	28940
44530	Mc Minn County, Tennessee	44	0.7988	0.7888	99944
44540	Mc Nairy County, Tennessee	44	0.7988	0.7888	99944
44550	Macon County, Tennessee	44	0.7988	0.9769	34980
44560	Madison County, Tennessee	3580	0.8973	0.8973	27180
44570	Marion County, Tennessee	1560	0.9098	0.9098	16860
44580	Marshall County, Tennessee	44	0.7988	0.7888	99944
44590	Maury County, Tennessee	44	0.7988	0.7888	99944
44600	Meigs County, Tennessee	44	0.7988	0.7888	99944
44610	Monroe County, Tennessee	44	0.7988	0.7888	99944
44620	Montgomery County, Tennessee	1660	0.8292	0.8292	17300
44630	Moore County, Tennessee	44	0.7988	0.7888	99944
44640	Morgan County, Tennessee	44	0.7988	0.7888	99944
44650	Obion County, Tennessee	44	0.7988	0.7888	99944
44660	Overton County, Tennessee	44	0.7988	0.7888	99944
44670	Perry County, Tennessee	44	0.7988	0.7888	99944
44680	Pickett County, Tennessee	44	0.7988	0.7888	99944
44690	Polk County, Tennessee	44	0.7988	0.8141	17420
44700	Putnam County, Tennessee	44	0.7988	0.7888	99944
44710	Rhea County, Tennessee	44	0.7988	0.7888	99944
44720	Roane County, Tennessee	44	0.7988	0.7888	99944
44730	Robertson County, Tennessee	5360	0.9787	0.9769	34980
44740	Rutherford County, Tennessee	5360	0.9787	0.9769	34980
44750	Scott County, Tennessee	44	0.7988	0.7888	99944
44760	Sequatchie County, Tennessee	44	0.7988	0.9098	16860
44770	Sevier County, Tennessee	3840	0.8411	0.7888	99944
44780	Shelby County, Tennessee	4920	0.9360	0.9341	32820
44790	Smith County, Tennessee	44	0.7988	0.9769	34980
44800	Stewart County, Tennessee	44	0.7988	0.8292	17300
44810	Sullivan County, Tennessee	3660	0.8015	0.8062	28700
44820	Sumner County, Tennessee	5360	0.9787	0.9769	34980
44830	Tipton County, Tennessee	4920	0.9360	0.9341	32820

TABLE A.—MSA/CBSA CROSSWALK—Continued

SSA State/ County Code	County and State Name	MSA Number	2006 MSA-based WI	2006 CBSA-based WI	CBSA Number
44840	Trousdale County, Tennessee	44	0.7988	0.9769	34980
44850	Unicoi County, Tennessee	3660	0.8015	0.7945	27740
44860	Union County, Tennessee	3840	0.8411	0.8454	28940
44870	Van Buren County, Tennessee	44	0.7988	0.7888	99944
44880	Warren County, Tennessee	44	0.7988	0.7888	99944
44890	Washington County, Tennessee	3660	0.8015	0.7945	27740
44900	Wayne County, Tennessee	44	0.7988	0.7888	99944
44910	Weakley County, Tennessee	44	0.7988	0.7888	99944
44920	White County, Tennessee	44	0.7988	0.7888	99944
44930	Williamson County, Tennessee	5360	0.9787	0.9769	34980
44940	Wilson County, Tennessee	5360	0.9787	0.9769	34980
45000	Anderson County, Texas	45	0.7936	0.8007	99945
45010	Andrews County, Texas	45	0.7936	0.8007	99945
45020	Angelina County, Texas	45	0.7936	0.8007	99945
45030	Aransas County, Texas	45	0.7936	0.8559	18580
45040	Archer County, Texas	9080	0.8373	0.8294	48660
45050	Armstrong County, Texas	45	0.7936	0.9166	11100
45060	Atascosa County, Texas	45	0.7936	0.8989	41700
45070	Austin County, Texas	45	0.7936	1.0005	26420
45080	Bailey County, Texas	45	0.7936	0.8007	99945
45090	Bandera County, Texas	45	0.7936	0.8989	41700
45100	Bastrop County, Texas	0640	0.9450	0.9450	12420
45110	Baylor County, Texas	45	0.7936	0.8007	99945
45113	Bee County, Texas	45	0.7936	0.8007	99945
45120	Bell County, Texas	3810	0.8535	0.8535	28660
45130	Bexar County, Texas	7240	0.8993	0.8989	41700
45140	Blanco County, Texas	45	0.7936	0.8007	99945
45150	Borden County, Texas	45	0.7936	0.8007	99945
45160	Bosque County, Texas	45	0.7936	0.8007	99945
45170	Bowie County, Texas	8360	0.8291	0.8291	45500
45180	Brazoria County, Texas	1145	0.8572	1.0005	26420
45190	Brazos County, Texas	1260	0.8909	0.8909	17780
45200	Brewster County, Texas	45	0.7936	0.8007	99945
45201	Briscoe County, Texas	45	0.7936	0.8007	99945
45210	Brooks County, Texas	45	0.7936	0.8007	99945
45220	Brown County, Texas	45	0.7936	0.8007	99945
45221	Burleson County, Texas	45	0.7936	0.8909	17780
45222	Burnet County, Texas	45	0.7936	0.8007	99945
45223	Caldwell County, Texas	0640	0.9450	0.9450	12420
45224	Calhoun County, Texas	45	0.7936	0.8168	47020
45230	Callahan County, Texas	45	0.7936	0.7904	10180
45240	Cameron County, Texas	1240	0.9822	0.9822	15180
45250	Camp County, Texas	45	0.7936	0.8007	99945
45251	Carson County, Texas	45	0.7936	0.9166	11100
45260	Cass County, Texas	45	0.7936	0.8007	99945
45270	Castro County, Texas	45	0.7936	0.8007	99945
45280	Chambers County, Texas	3360	1.0101	1.0005	26420
45281	Cherokee County, Texas	45	0.7936	0.8007	99945
45290	Childress County, Texas	45	0.7936	0.8007	99945
45291	Clay County, Texas	45	0.7936	0.8294	48660
45292	Cochran County, Texas	45	0.7936	0.8007	99945
45300	Coke County, Texas	45	0.7936	0.8007	99945
45301	Coleman County, Texas	45	0.7936	0.8007	99945
45310	Collin County, Texas	1920	1.0211	1.0233	19124
45311	Collingsworth County, Texas	45	0.7936	0.8007	99945
45312	Colorado County, Texas	45	0.7936	0.8007	99945
45320	Comal County, Texas	7240	0.8993	0.8989	41700
45321	Comanche County, Texas	45	0.7936	0.8007	99945
45330	Concho County, Texas	45	0.7936	0.8007	99945
45340	Cooke County, Texas	45	0.7936	0.8007	99945
45341	Coryell County, Texas	3810	0.8535	0.8535	28660
45350	Cottle County, Texas	45	0.7936	0.8007	99945
45360	Crane County, Texas	45	0.7936	0.8007	99945
45361	Crockett County, Texas	45	0.7936	0.8007	99945
45362	Crosby County, Texas	45	0.7936	0.8792	31180
45370	Culberson County, Texas	45	0.7936	0.8007	99945
45380	Dallam County, Texas	45	0.7936	0.8007	99945
45390	Dallas County, Texas	1920	1.0211	1.0233	19124
45391	Dawson County, Texas	45	0.7936	0.8007	99945

TABLE A.—MSA/CBSA CROSSWALK—Continued

SSA State/ County Code	County and State Name	MSA Number	2006 MSA-based WI	2006 CBSA-based WI	CBSA Number
45392	Deaf Smith County, Texas	45	0.7936	0.8007	99945
45400	Delta County, Texas	45	0.7936	1.0233	19124
45410	Denton County, Texas	1920	1.0211	1.0233	19124
45420	De Witt County, Texas	45	0.7936	0.8007	99945
45421	Dickens County, Texas	45	0.7936	0.8007	99945
45430	Dimmit County, Texas	45	0.7936	0.8007	99945
45431	Donley County, Texas	45	0.7936	0.8007	99945
45440	Duval County, Texas	45	0.7936	0.8007	99945
45450	Eastland County, Texas	45	0.7936	0.8007	99945
45451	Ector County, Texas	5800	0.9751	0.9894	36220
45460	Edwards County, Texas	45	0.7936	0.8007	99945
45470	Ellis County, Texas	1920	1.0211	1.0233	19124
45480	El Paso County, Texas	2320	0.8924	0.8924	21340
45490	Erath County, Texas	45	0.7936	0.8007	99945
45500	Falls County, Texas	45	0.7936	0.8007	99945
45510	Fannin County, Texas	45	0.7936	0.8007	99945
45511	Fayette County, Texas	45	0.7936	0.8007	99945
45520	Fisher County, Texas	45	0.7936	0.8007	99945
45521	Floyd County, Texas	45	0.7936	0.8007	99945
45522	Foard County, Texas	45	0.7936	0.8007	99945
45530	Fort Bend County, Texas	3360	1.0101	1.0005	26420
45531	Franklin County, Texas	45	0.7936	0.8007	99945
45540	Freestone County, Texas	45	0.7936	0.8007	99945
45541	Frio County, Texas	45	0.7936	0.8007	99945
45542	Gaines County, Texas	45	0.7936	0.8007	99945
45550	Galveston County, Texas	2920	0.9645	1.0005	26420
45551	Garza County, Texas	45	0.7936	0.8007	99945
45552	Gillespie County, Texas	45	0.7936	0.8007	99945
45560	Glasscock County, Texas	45	0.7936	0.8007	99945
45561	Goliad County, Texas	45	0.7936	0.8168	47020
45562	Gonzales County, Texas	45	0.7936	0.8007	99945
45563	Gray County, Texas	45	0.7936	0.8007	99945
45564	Grayson County, Texas	7640	0.9516	0.9516	43300
45570	Gregg County, Texas	4420	0.8897	0.8739	30980
45580	Grimes County, Texas	45	0.7936	0.8007	99945
45581	Guadaloupe County, Texas	7240	0.8993	0.8989	41700
45582	Hale County, Texas	45	0.7936	0.8007	99945
45583	Hall County, Texas	45	0.7936	0.8007	99945
45590	Hamilton County, Texas	45	0.7936	0.8007	99945
45591	Hansford County, Texas	45	0.7936	0.8007	99945
45592	Hardeman County, Texas	45	0.7936	0.8007	99945
45600	Hardin County, Texas	0840	0.8421	0.8421	13140
45610	Harris County, Texas	3360	1.0101	1.0005	26420
45620	Harrison County, Texas	4420	0.8897	0.8007	99945
45621	Hartley County, Texas	45	0.7936	0.8007	99945
45630	Haskell County, Texas	45	0.7936	0.8007	99945
45631	Hays County, Texas	0640	0.9450	0.9450	12420
45632	Hemphill County, Texas	45	0.7936	0.8007	99945
45640	Henderson County, Texas	1920	1.0211	0.8007	99945
45650	Hidalgo County, Texas	4880	0.8943	0.8943	32580
45651	Hill County, Texas	45	0.7936	0.8007	99945
45652	Hockley County, Texas	45	0.7936	0.8007	99945
45653	Hood County, Texas	2800	0.9545	0.8007	99945
45654	Hopkins County, Texas	45	0.7936	0.8007	99945
45660	Houston County, Texas	45	0.7936	0.8007	99945
45661	Howard County, Texas	45	0.7936	0.8007	99945
45662	Hudspeth County, Texas	45	0.7936	0.8007	99945
45670	Hunt County, Texas	1920	1.0211	1.0233	19124
45671	Hutchinson County, Texas	45	0.7936	0.8007	99945
45672	Irion County, Texas	45	0.7936	0.8280	41660
45680	Jack County, Texas	45	0.7936	0.8007	99945
45681	Jackson County, Texas	45	0.7936	0.8007	99945
45690	Jasper County, Texas	45	0.7936	0.8007	99945
45691	Jeff Davis County, Texas	45	0.7936	0.8007	99945
45700	Jefferson County, Texas	0840	0.8421	0.8421	13140
45710	Jim Hogg County, Texas	45	0.7936	0.8007	99945
45711	Jim Wells County, Texas	45	0.7936	0.8007	99945
45720	Johnson County, Texas	2800	0.9545	0.9510	23104
45721	Jones County, Texas	45	0.7936	0.7904	10180

TABLE A.—MSA/CBSA CROSSWALK—Continued

SSA State/ County Code	County and State Name	MSA Number	2006 MSA-based WI	2006 CBSA-based WI	CBSA Number
45722	Karnes County, Texas	45	0.7936	0.8007	99945
45730	Kaufman County, Texas	1920	1.0211	1.0233	19124
45731	Kendall County, Texas	45	0.7936	0.8989	41700
45732	Kenedy County, Texas	45	0.7936	0.8007	99945
45733	Kent County, Texas	45	0.7936	0.8007	99945
45734	Kerr County, Texas	45	0.7936	0.8007	99945
45740	Kimble County, Texas	45	0.7936	0.8007	99945
45741	King County, Texas	45	0.7936	0.8007	99945
45742	Kinney County, Texas	45	0.7936	0.8007	99945
45743	Kleberg County, Texas	45	0.7936	0.8007	99945
45744	Knox County, Texas	45	0.7936	0.8007	99945
45750	Lamar County, Texas	45	0.7936	0.8007	99945
45751	Lamb County, Texas	45	0.7936	0.8007	99945
45752	Lampasas County, Texas	45	0.7936	0.8535	28660
45753	La Salle County, Texas	45	0.7936	0.8007	99945
45754	Lavaca County, Texas	45	0.7936	0.8007	99945
45755	Lee County, Texas	45	0.7936	0.8007	99945
45756	Leon County, Texas	45	0.7936	0.8007	99945
45757	Liberty County, Texas	3360	1.0101	1.0005	26420
45758	Limestone County, Texas	45	0.7936	0.8007	99945
45759	Lipscomb County, Texas	45	0.7936	0.8007	99945
45760	Live Oak County, Texas	45	0.7936	0.8007	99945
45761	Llano County, Texas	45	0.7936	0.8007	99945
45762	Loving County, Texas	45	0.7936	0.8007	99945
45770	Lubbock County, Texas	4600	0.8792	0.8792	31180
45771	Lynn County, Texas	45	0.7936	0.8007	99945
45772	Mc Culloch County, Texas	45	0.7936	0.8007	99945
45780	Mc Lennan County, Texas	8800	0.8527	0.8527	47380
45781	Mc Mullen County, Texas	45	0.7936	0.8007	99945
45782	Madison County, Texas	45	0.7936	0.8007	99945
45783	Marion County, Texas	45	0.7936	0.8007	99945
45784	Martin County, Texas	45	0.7936	0.8007	99945
45785	Mason County, Texas	45	0.7936	0.8007	99945
45790	Matagorda County, Texas	45	0.7936	0.8007	99945
45791	Maverick County, Texas	45	0.7936	0.8007	99945
45792	Medina County, Texas	45	0.7936	0.8989	41700
45793	Menard County, Texas	45	0.7936	0.8007	99945
45794	Midland County, Texas	5800	0.9751	0.9523	33260
45795	Milam County, Texas	45	0.7936	0.8007	99945
45796	Mills County, Texas	45	0.7936	0.8007	99945
45797	Mitchell County, Texas	45	0.7936	0.8007	99945
45800	Montague County, Texas	45	0.7936	0.8007	99945
45801	Montgomery County, Texas	3360	1.0101	1.0005	26420
45802	Moore County, Texas	45	0.7936	0.8007	99945
45803	Morris County, Texas	45	0.7936	0.8007	99945
45804	Motley County, Texas	45	0.7936	0.8007	99945
45810	Nacogdoches County, Texas	45	0.7936	0.8007	99945
45820	Navarro County, Texas	45	0.7936	0.8007	99945
45821	Newton County, Texas	45	0.7936	0.8007	99945
45822	Nolan County, Texas	45	0.7936	0.8007	99945
45830	Nueces County, Texas	1880	0.8559	0.8559	18580
45831	Ochiltree County, Texas	45	0.7936	0.8007	99945
45832	Oldham County, Texas	45	0.7936	0.8007	99945
45840	Orange County, Texas	0840	0.8421	0.8421	13140
45841	Palo Pinto County, Texas	45	0.7936	0.8007	99945
45842	Panola County, Texas	45	0.7936	0.8007	99945
45843	Parker County, Texas	2800	0.9545	0.9510	23104
45844	Parmer County, Texas	45	0.7936	0.8007	99945
45845	Pecos County, Texas	45	0.7936	0.8007	99945
45850	Polk County, Texas	45	0.7936	0.8007	99945
45860	Potter County, Texas	0320	0.9166	0.9166	11100
45861	Presidio County, Texas	45	0.7936	0.8007	99945
45870	Rains County, Texas	45	0.7936	0.8007	99945
45871	Randall County, Texas	0320	0.9166	0.9166	11100
45872	Reagan County, Texas	45	0.7936	0.8007	99945
45873	Real County, Texas	45	0.7936	0.8007	99945
45874	Red River County, Texas	45	0.7936	0.8007	99945
45875	Reeves County, Texas	45	0.7936	0.8007	99945
45876	Refugio County, Texas	45	0.7936	0.8007	99945

TABLE A.—MSA/CBSA CROSSWALK—Continued

SSA State/ County Code	County and State Name	MSA Number	2006 MSA-based WI	2006 CBSA-based WI	CBSA Number
45877	Roberts County, Texas	45	0.7936	0.8007	99945
45878	Robertson County, Texas	45	0.7936	0.8909	17780
45879	Rockwall County, Texas	1920	1.0211	1.0233	19124
45880	Runnels County, Texas	45	0.7936	0.8007	99945
45881	Rusk County, Texas	45	0.7936	0.8739	30980
45882	Sabine County, Texas	45	0.7936	0.8007	99945
45883	San Augustine County, Texas	45	0.7936	0.8007	99945
45884	San Jacinto County, Texas	45	0.7936	1.0005	26420
45885	San Patricio County, Texas	1880	0.8559	0.8559	18580
45886	San Saba County, Texas	45	0.7936	0.8007	99945
45887	Schleicher County, Texas	45	0.7936	0.8007	99945
45888	Scurry County, Texas	45	0.7936	0.8007	99945
45889	Shackelford County, Texas	45	0.7936	0.8007	99945
45890	Shelby County, Texas	45	0.7936	0.8007	99945
45891	Sherman County, Texas	45	0.7936	0.8007	99945
45892	Smith County, Texas	8640	0.9307	0.9307	46340
45893	Somervell County, Texas	45	0.7936	0.8007	99945
45900	Starr County, Texas	45	0.7936	0.8007	99945
45901	Stephens County, Texas	45	0.7936	0.8007	99945
45902	Sterling County, Texas	45	0.7936	0.8007	99945
45903	Stonewall County, Texas	45	0.7936	0.8007	99945
45904	Sutton County, Texas	45	0.7936	0.8007	99945
45905	Swisher County, Texas	45	0.7936	0.8007	99945
45910	Tarrant County, Texas	2800	0.9545	0.9510	23104
45911	Taylor County, Texas	0040	0.8062	0.7904	10180
45912	Terrell County, Texas	45	0.7936	0.8007	99945
45913	Terry County, Texas	45	0.7936	0.8007	99945
45920	Throckmorton County, Texas	45	0.7936	0.8007	99945
45921	Titus County, Texas	45	0.7936	0.8007	99945
45930	Tom Green County, Texas	7200	0.8280	0.8280	41660
45940	Travis County, Texas	0640	0.9450	0.9450	12420
45941	Trinity County, Texas	45	0.7936	0.8007	99945
45942	Tyler County, Texas	45	0.7936	0.8007	99945
45943	Upshur County, Texas	4420	0.8897	0.8739	30980
45944	Upton County, Texas	45	0.7936	0.8007	99945
45945	Uvalde County, Texas	45	0.7936	0.8007	99945
45946	Val Verde County, Texas	45	0.7936	0.8007	99945
45947	Van Zandt County, Texas	45	0.7936	0.8007	99945
45948	Victoria County, Texas	8750	0.8168	0.8168	47020
45949	Walker County, Texas	45	0.7936	0.8007	99945
45950	Waller County, Texas	3360	1.0101	1.0005	26420
45951	Ward County, Texas	45	0.7936	0.8007	99945
45952	Washington County, Texas	45	0.7936	0.8007	99945
45953	Webb County, Texas	4080	0.8076	0.8076	29700
45954	Wharton County, Texas	45	0.7936	0.8007	99945
45955	Wheeler County, Texas	45	0.7936	0.8007	99945
45960	Wichita County, Texas	9080	0.8373	0.8294	48660
45961	Wilbarger County, Texas	45	0.7936	0.8007	99945
45962	Willacy County, Texas	45	0.7936	0.8007	99945
45970	Williamson County, Texas	0640	0.9450	0.9450	12420
45971	Wilson County, Texas	7240	0.8993	0.8989	41700
45972	Winkler County, Texas	45	0.7936	0.8007	99945
45973	Wise County, Texas	45	0.7936	0.9510	23104
45974	Wood County, Texas	45	0.7936	0.8007	99945
45980	Yoakum County, Texas	45	0.7936	0.8007	99945
45981	Young County, Texas	45	0.7936	0.8007	99945
45982	Zapata County, Texas	45	0.7936	0.8007	99945
45983	Zavala County, Texas	45	0.7936	0.8007	99945
46000	Beaver County, Utah	46	0.8779	0.8126	99946
46010	Box Elder County, Utah	46	0.8779	0.8126	99946
46020	Cache County, Utah	46	0.8779	0.9173	30860
46030	Carbon County, Utah	46	0.8779	0.8126	99946
46040	Daggett County, Utah	46	0.8779	0.8126	99946
46050	Davis County, Utah	7160	0.9350	0.9038	36260
46060	Duchesne County, Utah	46	0.8779	0.8126	99946
46070	Emery County, Utah	46	0.8779	0.8126	99946
46080	Garfield County, Utah	46	0.8779	0.8126	99946
46090	Grand County, Utah	46	0.8779	0.8126	99946
46100	Iron County, Utah	46	0.8779	0.8126	99946

TABLE A.—MSA/CBSA CROSSWALK—Continued

SSA State/ County Code	County and State Name	MSA Number	2006 MSA-based WI	2006 CBSA-based WI	CBSA Number
46110	Juab County, Utah	46	0.8779	0.9510	39340
46120	Kane County, Utah	2620	1.1857	0.8126	99946
46130	Millard County, Utah	46	0.8779	0.8126	99946
46140	Morgan County, Utah	46	0.8779	0.9038	36260
46150	Piute County, Utah	46	0.8779	0.8126	99946
46160	Rich County, Utah	46	0.8779	0.8126	99946
46170	Salt Lake County, Utah	7160	0.9350	0.9433	41620
46180	San Juan County, Utah	46	0.8779	0.8126	99946
46190	Sanpete County, Utah	46	0.8779	0.8126	99946
46200	Sevier County, Utah	46	0.8779	0.8126	99946
46210	Summit County, Utah	46	0.8779	0.9433	41620
46220	Tooele County, Utah	46	0.8779	0.9433	41620
46230	Uintah County, Utah	46	0.8779	0.8126	99946
46240	Utah County, Utah	6520	0.9510	0.9510	39340
46250	Wasatch County, Utah	46	0.8779	0.8126	99946
46260	Washington County, Utah	46	0.8779	0.9402	41100
46270	Wayne County, Utah	46	0.8779	0.8126	99946
46280	Weber County, Utah	7160	0.9350	0.9038	36260
47000	Addison County, Vermont	47	0.9840	0.9840	99947
47010	Bennington County, Vermont	47	0.9840	0.9840	99947
47020	Caledonia County, Vermont	47	0.9840	0.9840	99947
47030	Chittenden County, Vermont	1303	0.9446	0.9446	15540
47040	Essex County, Vermont	47	0.9840	0.9840	99947
47050	Franklin County, Vermont	1303	0.9446	0.9446	15540
47060	Grand Isle County, Vermont	1303	0.9446	0.9446	15540
47070	Lamoille County, Vermont	47	0.9840	0.9840	99947
47080	Orange County, Vermont	47	0.9840	0.9840	99947
47090	Orleans County, Vermont	47	0.9840	0.9840	99947
47100	Rutland County, Vermont	47	0.9840	0.9840	99947
47110	Washington County, Vermont	47	0.9840	0.9840	99947
47120	Windham County, Vermont	47	0.9840	0.9840	99947
47130	Windsor County, Vermont	47	0.9840	0.9840	99947
49000	Accomack County, Virginia	49	0.8420	0.8012	99949
49010	Albemarle County, Virginia	1540	1.0234	1.0234	16820
49011	Alexandria City County, Virginia	8840	1.0983	1.0932	47894
49020	Alleghany County, Virginia	49	0.8420	0.8012	99949
49030	Amelia County, Virginia	49	0.8420	0.9338	40060
49040	Amherst County, Virginia	4640	0.8700	0.8700	31340
49050	Appomattox County, Virginia	49	0.8420	0.8700	31340
49060	Arlington County, Virginia	8840	1.0983	1.0932	47894
49070	Augusta County, Virginia	49	0.8420	0.8012	99949
49080	Bath County, Virginia	49	0.8420	0.8012	99949
49088	Bedford City County, Virginia	4640	0.8700	0.8700	31340
49090	Bedford County, Virginia	4640	0.8700	0.8700	31340
49100	Bland County, Virginia	49	0.8420	0.8012	99949
49110	Botetourt County, Virginia	6800	0.8395	0.8383	40220
49111	Bristol City County, Virginia	3660	0.8015	0.8062	28700
49120	Brunswick County, Virginia	49	0.8420	0.8012	99949
49130	Buchanan County, Virginia	49	0.8420	0.8012	99949
49140	Buckingham County, Virginia	49	0.8420	0.8012	99949
49141	Buena Vista City County, Virginia	49	0.8420	0.8012	99949
49150	Campbell County, Virginia	4640	0.8700	0.8700	31340
49160	Caroline County, Virginia	49	0.8420	0.9338	40060
49170	Carroll County, Virginia	49	0.8420	0.8012	99949
49180	Charles City County, Virginia	6760	0.9338	0.9338	40060
49190	Charlotte County, Virginia	49	0.8420	0.8012	99949
49191	Charlottesville City County, Virginia	1540	1.0234	1.0234	16820
49194	Chesapeake County, Virginia	5720	0.8808	0.8808	47260
49200	Chesterfield County, Virginia	6760	0.9338	0.9338	40060
49210	Clarke County, Virginia	8840	1.0983	1.0932	47894
49211	Clifton Forge City County, Virginia	49	0.8420	0.8012	99949
49212	Colonial Heights County, Virginia	6760	0.9338	0.9338	40060
49213	Covington City County, Virginia	49	0.8420	0.8012	99949
49220	Craig County, Virginia	49	0.8420	0.8383	40220
49230	Culpeper County, Virginia	8840	1.0983	0.8012	99949
49240	Cumberland County, Virginia	49	0.8420	0.9338	40060
49241	Danville City County, Virginia	1950	0.8497	0.8497	19260
49250	Dickenson County, Virginia	49	0.8420	0.8012	99949
49260	Dinniddie County, Virginia	6760	0.9338	0.9338	40060

TABLE A.—MSA/CBSA CROSSWALK—Continued

SSA State/ County Code	County and State Name	MSA Number	2006 MSA-based WI	2006 CBSA-based WI	CBSA Number
49270	Emporia County, Virginia	49	0.8420	0.8012	99949
49280	Essex County, Virginia	49	0.8420	0.8012	99949
49288	Fairfax City County, Virginia	8840	1.0983	1.0932	47894
49290	Fairfax County, Virginia	8840	1.0983	1.0932	47894
49291	Falls Church City County, Virginia	8840	1.0983	1.0932	47894
49300	Fauquier County, Virginia	8840	1.0983	1.0932	47894
49310	Floyd County, Virginia	49	0.8420	0.8012	99949
49320	Fluvanna County, Virginia	1540	1.0234	1.0234	16820
49328	Franklin City County, Virginia	49	0.8420	0.8012	99949
49330	Franklin County, Virginia	49	0.8420	0.8383	40220
49340	Frederick County, Virginia	49	0.8420	1.0224	49020
49342	Fredericksburg City County, Virginia	8840	1.0983	1.0932	47894
49343	Galax City County, Virginia	49	0.8420	0.8012	99949
49350	Giles County, Virginia	49	0.8420	0.7962	13980
49360	Gloucester County, Virginia	5720	0.8808	0.8808	47260
49370	Goochland County, Virginia	6760	0.9338	0.9338	40060
49380	Grayson County, Virginia	49	0.8420	0.8012	99949
49390	Greene County, Virginia	1540	1.0234	1.0234	16820
49400	Greensville County, Virginia	49	0.8420	0.8012	99949
49410	Halifax County, Virginia	49	0.8420	0.8012	99949
49411	Hampton City County, Virginia	5720	0.8808	0.8808	47260
49420	Hanover County, Virginia	6760	0.9338	0.9338	40060
49421	Harrisonburg City County, Virginia	49	0.8420	0.9098	25500
49430	Henrico County, Virginia	6760	0.9338	0.9338	40060
49440	Henry County, Virginia	49	0.8420	0.8012	99949
49450	Highland County, Virginia	49	0.8420	0.8012	99949
49451	Hopewell City County, Virginia	6760	0.9338	0.9338	40060
49460	Isle Of Wight County, Virginia	5720	0.8808	0.8808	47260
49470	James City Co County, Virginia	5720	0.8808	0.8808	47260
49480	King And Queen County, Virginia	49	0.8420	0.9338	40060
49490	King George County, Virginia	8840	1.0983	0.8012	99949
49500	King William County, Virginia	49	0.8420	0.9338	40060
49510	Lancaster County, Virginia	49	0.8420	0.8012	99949
49520	Lee County, Virginia	49	0.8420	0.8012	99949
49522	Lexington County, Virginia	49	0.8420	0.8012	99949
49530	Loudoun County, Virginia	8840	1.0983	1.0932	47894
49540	Louisa County, Virginia	49	0.8420	0.9338	40060
49550	Lunenburg County, Virginia	49	0.8420	0.8012	99949
49551	Lynchburg City County, Virginia	4640	0.8700	0.8700	31340
49560	Madison County, Virginia	49	0.8420	0.8012	99949
49561	Martinsville City County, Virginia	49	0.8420	0.8012	99949
49563	Manassas City County, Virginia	8840	1.0983	1.0932	47894
49565	Manassas Park City County, Virginia	8840	1.0983	1.0932	47894
49570	Mathews County, Virginia	5720	0.8808	0.8808	47260
49580	Mecklenburg County, Virginia	49	0.8420	0.8012	99949
49590	Middlesex County, Virginia	49	0.8420	0.8012	99949
49600	Montgomery County, Virginia	49	0.8420	0.7962	13980
49610	Nansemond County, Virginia	49	0.8420	0.8012	99949
49620	Nelson County, Virginia	49	0.8420	1.0234	16820
49621	New Kent County, Virginia	6760	0.9338	0.9338	40060
49622	Newport News City County, Virginia	5720	0.8808	0.8808	47260
49641	Norfolk City County, Virginia	5720	0.8808	0.8808	47260
49650	Northampton County, Virginia	49	0.8420	0.8012	99949
49660	Northumberland County, Virginia	49	0.8420	0.8012	99949
49661	Norton City County, Virginia	49	0.8420	0.8012	99949
49670	Nottoway County, Virginia	49	0.8420	0.8012	99949
49680	Orange County, Virginia	49	0.8420	0.8012	99949
49690	Page County, Virginia	49	0.8420	0.8012	99949
49700	Patrick County, Virginia	49	0.8420	0.8012	99949
49701	Petersburg City County, Virginia	6760	0.9338	0.9338	40060
49710	Pittsylvania County, Virginia	1950	0.8497	0.8497	19260
49711	Portsmouth City County, Virginia	5720	0.8808	0.8808	47260
49712	Poquoson City County, Virginia	5720	0.8808	0.8808	47260
49720	Powhatan County, Virginia	6760	0.9338	0.9338	40060
49730	Prince Edward County, Virginia	49	0.8420	0.8012	99949
49740	Prince George County, Virginia	6760	0.9338	0.9338	40060
49750	Prince William County, Virginia	8840	1.0983	1.0932	47894
49770	Pulaski County, Virginia	49	0.8420	0.7962	13980
49771	Radford City County, Virginia	49	0.8420	0.7962	13980

TABLE A.—MSA/CBSA CROSSWALK—Continued

SSA State/ County Code	County and State Name	MSA Number	2006 MSA-based WI	2006 CBSA-based WI	CBSA Number
49780	Rappahannock County, Virginia	49	0.8420	0.8012	99949
49790	Richmond County, Virginia	49	0.8420	0.8012	99949
49791	Richmond City County, Virginia	6760	0.9338	0.9338	40060
49800	Roanoke County, Virginia	6800	0.8395	0.8383	40220
49801	Roanoke City County, Virginia	6800	0.8395	0.8383	40220
49810	Rockbridge County, Virginia	49	0.8420	0.8012	99949
49820	Rockingham County, Virginia	49	0.8420	0.9098	25500
49830	Russell County, Virginia	49	0.8420	0.8012	99949
49838	Salem County, Virginia	6800	0.8395	0.8383	40220
49840	Scott County, Virginia	3660	0.8015	0.8062	28700
49850	Shenandoah County, Virginia	49	0.8420	0.8012	99949
49860	Smyth County, Virginia	49	0.8420	0.8012	99949
49867	South Boston City County, Virginia	49	0.8420	0.8012	99949
49870	Southampton County, Virginia	49	0.8420	0.8012	99949
49880	Spotsylvania County, Virginia	8840	1.0983	1.0932	47894
49890	Stafford County, Virginia	8840	1.0983	1.0932	47894
49891	Staunton City County, Virginia	49	0.8420	0.8012	99949
49892	Suffolk City County, Virginia	5720	0.8808	0.8808	47260
49900	Surry County, Virginia	49	0.8420	0.8808	47260
49910	Sussex County, Virginia	49	0.8420	0.9338	40060
49920	Tazewell County, Virginia	49	0.8420	0.8012	99949
49921	Virginia Beach City County, Virginia	5720	0.8808	0.8808	47260
49930	Warren County, Virginia	8840	1.0983	1.0932	47894
49950	Washington County, Virginia	3660	0.8015	0.8062	28700
49951	Waynesboro City County, Virginia	49	0.8420	0.8012	99949
49960	Westmoreland County, Virginia	49	0.8420	0.8012	99949
49961	Williamsburg City County, Virginia	5720	0.8808	0.8808	47260
49962	Winchester City County, Virginia	49	0.8420	1.0224	49020
49970	Wise County, Virginia	49	0.8420	0.8012	99949
49980	Wythe County, Virginia	49	0.8420	0.8012	99949
49981	York County, Virginia	5720	0.8808	0.8808	47260
50000	Adams County, Washington	50	1.0194	1.0458	99950
50010	Asotin County, Washington	50	1.0194	0.9896	30300
50020	Benton County, Washington	6740	1.0630	1.0630	28420
50030	Chelan County, Washington	50	1.0194	1.0080	48300
50040	Clallam County, Washington	50	1.0194	1.0458	99950
50050	Clark County, Washington	6440	1.1260	1.1260	38900
50060	Columbia County, Washington	50	1.0194	1.0458	99950
50070	Cowlitz County, Washington	50	1.0194	0.9523	31020
50080	Douglas County, Washington	50	1.0194	1.0080	48300
50090	Ferry County, Washington	50	1.0194	1.0458	99950
50100	Franklin County, Washington	6740	1.0630	1.0630	28420
50110	Garfield County, Washington	50	1.0194	1.0458	99950
50120	Grant County, Washington	50	1.0194	1.0458	99950
50130	Grays Harbor County, Washington	50	1.0194	1.0458	99950
50140	Island County, Washington	7600	1.1579	1.0458	99950
50150	Jefferson County, Washington	50	1.0194	1.0458	99950
50160	King County, Washington	7600	1.1579	1.1589	42644
50170	Kitsap County, Washington	1150	1.0686	1.0686	14740
50180	Kittitas County, Washington	50	1.0194	1.0458	99950
50190	Klickitat County, Washington	50	1.0194	1.0458	99950
50200	Lewis County, Washington	50	1.0194	1.0458	99950
50210	Lincoln County, Washington	50	1.0194	1.0458	99950
50220	Mason County, Washington	50	1.0194	1.0458	99950
50230	Okanogan County, Washington	50	1.0194	1.0458	99950
50240	Pacific County, Washington	50	1.0194	1.0458	99950
50250	Pend Oreille County, Washington	50	1.0194	1.0458	99950
50260	Pierce County, Washington	8200	1.0753	1.0753	45104
50270	San Juan County, Washington	50	1.0194	1.0458	99950
50280	Skagit County, Washington	50	1.0194	1.0465	34580
50290	Skamania County, Washington	50	1.0194	1.1260	38900
50300	Snohomish County, Washington	7600	1.1579	1.1589	42644
50310	Spokane County, Washington	7840	1.0916	1.0916	44060
50320	Stevens County, Washington	50	1.0194	1.0458	99950
50330	Thurston County, Washington	5910	1.0938	1.0938	36500
50340	Wahkiakum County, Washington	50	1.0194	1.0458	99950
50350	Walla Walla County, Washington	50	1.0194	1.0458	99950
50360	Whatcom County, Washington	0860	1.1743	1.1743	13380
50370	Whitman County, Washington	50	1.0194	1.0458	99950

TABLE A.—MSA/CBSA CROSSWALK—Continued

SSA State/ County Code	County and State Name	MSA Number	2006 MSA-based WI	2006 CBSA-based WI	CBSA Number
50380	Yakima County, Washington	9260	1.0165	1.0165	49420
51000	Barbour County, W Virginia	51	0.7908	0.7725	99951
51010	Berkeley County, W Virginia	8840	1.0983	0.9499	25180
51020	Boone County, W Virginia	51	0.7908	0.8428	16620
51030	Braxton County, W Virginia	51	0.7908	0.7725	99951
51040	Brooke County, W Virginia	8080	0.7827	0.7827	48260
51050	Cabell County, W Virginia	3400	0.9486	0.9486	26580
51060	Calhoun County, W Virginia	51	0.7908	0.7725	99951
51070	Clay County, W Virginia	51	0.7908	0.8428	16620
51080	Doddridge County, W Virginia	51	0.7908	0.7725	99951
51090	Fayette County, W Virginia	51	0.7908	0.7725	99951
51100	Gilmer County, W Virginia	51	0.7908	0.7725	99951
51110	Grant County, W Virginia	51	0.7908	0.7725	99951
51120	Greenbrier County, W Virginia	51	0.7908	0.7725	99951
51130	Hampshire County, W Virginia	51	0.7908	1.0224	49020
51140	Hancock County, W Virginia	8080	0.7827	0.7827	48260
51150	Hardy County, W Virginia	51	0.7908	0.7725	99951
51160	Harrison County, W Virginia	51	0.7908	0.7725	99951
51170	Jackson County, W Virginia	51	0.7908	0.7725	99951
51180	Jefferson County, W Virginia	8840	1.0983	1.0932	47894
51190	Kanawha County, W Virginia	1480	0.8428	0.8428	16620
51200	Lewis County, W Virginia	51	0.7908	0.7725	99951
51210	Lincoln County, W Virginia	51	0.7908	0.8428	16620
51220	Logan County, W Virginia	51	0.7908	0.7725	99951
51230	Mc Dowell County, W Virginia	51	0.7908	0.7725	99951
51240	Marion County, W Virginia	51	0.7908	0.7725	99951
51250	Marshall County, W Virginia	9000	0.7168	0.7168	48540
51260	Mason County, W Virginia	51	0.7908	0.7725	99951
51270	Mercer County, W Virginia	51	0.7908	0.7725	99951
51280	Mineral County, W Virginia	1900	0.9326	0.9326	19060
51290	Mingo County, W Virginia	51	0.7908	0.7725	99951
51300	Monongalia County, W Virginia	51	0.7908	0.8428	34060
51310	Monroe County, W Virginia	51	0.7908	0.7725	99951
51320	Morgan County, W Virginia	51	0.7908	0.9499	25180
51330	Nicholas County, W Virginia	51	0.7908	0.7725	99951
51340	Ohio County, W Virginia	9000	0.7168	0.7168	48540
51350	Pendleton County, W Virginia	51	0.7908	0.7725	99951
51360	Pleasants County, W Virginia	51	0.7908	0.8278	37620
51370	Pocahontas County, W Virginia	51	0.7908	0.7725	99951
51380	Preston County, W Virginia	51	0.7908	0.8428	34060
51390	Putnam County, W Virginia	1480	0.8428	0.8428	16620
51400	Raleigh County, W Virginia	51	0.7908	0.7725	99951
51410	Randolph County, W Virginia	51	0.7908	0.7725	99951
51420	Ritchie County, W Virginia	51	0.7908	0.7725	99951
51430	Roane County, W Virginia	51	0.7908	0.7725	99951
51440	Summers County, W Virginia	51	0.7908	0.7725	99951
51450	Taylor County, W Virginia	51	0.7908	0.7725	99951
51460	Tucker County, W Virginia	51	0.7908	0.7725	99951
51470	Tyler County, W Virginia	51	0.7908	0.7725	99951
51480	Upshur County, W Virginia	51	0.7908	0.7725	99951
51490	Wayne County, W Virginia	3400	0.9486	0.9486	26580
51500	Webster County, W Virginia	51	0.7908	0.7725	99951
51510	Wetzel County, W Virginia	51	0.7908	0.7725	99951
51520	Wirt County, W Virginia	51	0.7908	0.8278	37620
51530	Wood County, W Virginia	6020	0.8278	0.8278	37620
51540	Wyoming County, W Virginia	51	0.7908	0.7725	99951
52000	Adams County, Wisconsin	52	0.9446	0.9480	99952
52010	Ashland County, Wisconsin	52	0.9446	0.9480	99952
52020	Barron County, Wisconsin	52	0.9446	0.9480	99952
52030	Bayfield County, Wisconsin	52	0.9446	0.9480	99952
52040	Brown County, Wisconsin	3080	0.9452	0.9452	24580
52050	Buffalo County, Wisconsin	52	0.9446	0.9480	99952
52060	Burnett County, Wisconsin	52	0.9446	0.9480	99952
52070	Calumet County, Wisconsin	0460	0.9248	0.9298	11540
52080	Chippewa County, Wisconsin	2290	0.9210	0.9210	20740
52090	Clark County, Wisconsin	52	0.9446	0.9480	99952
52100	Columbia County, Wisconsin	52	0.9446	1.0635	31540
52110	Crawford County, Wisconsin	52	0.9446	0.9480	99952
52120	Dane County, Wisconsin	4720	1.0764	1.0635	31540

TABLE A.—MSA/CBSA CROSSWALK—Continued

SSA State/ County Code	County and State Name	MSA Number	2006 MSA-based WI	2006 CBSA-based WI	CBSA Number
52130	Dodge County, Wisconsin	52	0.9446	0.9480	99952
52140	Door County, Wisconsin	52	0.9446	0.9480	99952
52150	Douglas County, Wisconsin	2240	1.0223	1.0209	20260
52160	Dunn County, Wisconsin	52	0.9446	0.9480	99952
52170	Eau Claire County, Wisconsin	2290	0.9210	0.9210	20740
52180	Florence County, Wisconsin	52	0.9446	0.9480	99952
52190	Fond Du Lac County, Wisconsin	52	0.9446	0.9650	22540
52200	Forest County, Wisconsin	52	0.9446	0.9480	99952
52210	Grant County, Wisconsin	52	0.9446	0.9480	99952
52220	Green County, Wisconsin	52	0.9446	0.9480	99952
52230	Green Lake County, Wisconsin	52	0.9446	0.9480	99952
52240	Iowa County, Wisconsin	52	0.9446	1.0635	31540
52250	Iron County, Wisconsin	52	0.9446	0.9480	99952
52260	Jackson County, Wisconsin	52	0.9446	0.9480	99952
52270	Jefferson County, Wisconsin	52	0.9446	0.9480	99952
52280	Juneau County, Wisconsin	52	0.9446	0.9480	99952
52290	Kenosha County, Wisconsin	3800	0.9770	1.0440	29404
52300	Kewaunee County, Wisconsin	52	0.9446	0.9452	24580
52310	La Crosse County, Wisconsin	3870	0.9573	0.9573	29100
52320	Lafayette County, Wisconsin	52	0.9446	0.9480	99952
52330	Langlade County, Wisconsin	52	0.9446	0.9480	99952
52340	Lincoln County, Wisconsin	52	0.9446	0.9480	99952
52350	Manitowoc County, Wisconsin	52	0.9446	0.9480	99952
52360	Marathon County, Wisconsin	8940	0.9600	0.9600	48140
52370	Marinette County, Wisconsin	52	0.9446	0.9480	99952
52380	Marquette County, Wisconsin	52	0.9446	0.9480	99952
52381	Menominee County, Wisconsin	52	0.9446	0.9480	99952
52390	Milwaukee County, Wisconsin	5080	1.0106	1.0106	33340
52400	Monroe County, Wisconsin	52	0.9446	0.9480	99952
52410	Oconto County, Wisconsin	52	0.9446	0.9452	24580
52420	Oneida County, Wisconsin	52	0.9446	0.9480	99952
52430	Outagamie County, Wisconsin	0460	0.9248	0.9298	11540
52440	Ozaukee County, Wisconsin	5080	1.0106	1.0106	33340
52450	Pepin County, Wisconsin	52	0.9446	0.9480	99952
52460	Pierce County, Wisconsin	5120	1.1078	1.1078	33460
52470	Polk County, Wisconsin	52	0.9446	0.9480	99952
52480	Portage County, Wisconsin	52	0.9446	0.9480	99952
52490	Price County, Wisconsin	52	0.9446	0.9480	99952
52500	Racine County, Wisconsin	6600	0.9006	0.9006	39540
52510	Richland County, Wisconsin	52	0.9446	0.9480	99952
52520	Rock County, Wisconsin	3620	0.9547	0.9547	27500
52530	Rusk County, Wisconsin	52	0.9446	0.9480	99952
52540	St Croix County, Wisconsin	5120	1.1078	1.1078	33460
52550	Sauk County, Wisconsin	52	0.9446	0.9480	99952
52560	Sawyer County, Wisconsin	52	0.9446	0.9480	99952
52570	Shawano County, Wisconsin	52	0.9446	0.9480	99952
52580	Sheboygan County, Wisconsin	7620	0.8920	0.8920	43100
52590	Taylor County, Wisconsin	52	0.9446	0.9480	99952
52600	Trempealeau County, Wisconsin	52	0.9446	0.9480	99952
52610	Vernon County, Wisconsin	52	0.9446	0.9480	99952
52620	Vilas County, Wisconsin	52	0.9446	0.9480	99952
52630	Walworth County, Wisconsin	52	0.9446	0.9480	99952
52640	Washburn County, Wisconsin	52	0.9446	0.9480	99952
52650	Washington County, Wisconsin	5080	1.0106	1.0106	33340
52660	Waukesha County, Wisconsin	5080	1.0106	1.0106	33340
52670	Waupaca County, Wisconsin	52	0.9446	0.9480	99952
52680	Waushara County, Wisconsin	52	0.9446	0.9480	99952
52690	Winnebago County, Wisconsin	0460	0.9248	0.9192	36780
52700	Wood County, Wisconsin	52	0.9446	0.9480	99952
53000	Albany County, Wyoming	53	0.9214	0.9214	99953
53010	Big Horn County, Wyoming	53	0.9214	0.9214	99953
53020	Campbell County, Wyoming	53	0.9214	0.9214	99953
53030	Carbon County, Wyoming	53	0.9214	0.9214	99953
53040	Converse County, Wyoming	53	0.9214	0.9214	99953
53050	Crook County, Wyoming	53	0.9214	0.9214	99953
53060	Fremont County, Wyoming	53	0.9214	0.9214	99953
53070	Goshen County, Wyoming	53	0.9214	0.9214	99953
53080	Hot Springs County, Wyoming	53	0.9214	0.9214	99953
53090	Johnson County, Wyoming	53	0.9214	0.9214	99953

TABLE A.—MSA/CBSA CROSSWALK—Continued

SSA State/ County Code	County and State Name	MSA Number	2006 MSA-based WI	2006 CBSA-based WI	CBSA Number
53100	Laramie County, Wyoming	1580	0.8784	0.8784	16940
53110	Lincoln County, Wyoming	53	0.9214	0.9214	99953
53120	Natrona County, Wyoming	1350	0.9035	0.9035	16220
53130	Niobrara County, Wyoming	53	0.9214	0.9214	99953
53140	Park County, Wyoming	53	0.9214	0.9214	99953
53150	Platte County, Wyoming	53	0.9214	0.9214	99953
53160	Sheridan County, Wyoming	53	0.9214	0.9214	99953
53170	Sublette County, Wyoming	53	0.9214	0.9214	99953
53180	Sweetwater County, Wyoming	53	0.9214	0.9214	99953
53190	Teton County, Wyoming	53	0.9214	0.9214	99953
53200	Uinta County, Wyoming	53	0.9214	0.9214	99953
53210	Washakie County, Wyoming	53	0.9214	0.9214	99953
53220	Weston County, Wyoming	53	0.9214	0.9214	99953

[FR Doc. 05–9934 Filed 5–13–05; 4:15 pm]

BILLING CODE 4120–01–P

Federal Register

Thursday,
May 19, 2005

Part VI

Department of Transportation

Federal Aviation Administration

14 CFR Part 401, et al.

Miscellaneous Changes to Commercial Space Transportation Regulations; Proposed Rule

DEPARTMENT OF TRANSPORTATION

Federal Aviation Administration

14 CFR Parts 401, 404, 413, 415, and 420

[Docket No. FAA–2005–21234, Notice No. 05–06]

RIN 2120–AI45

Miscellaneous Changes to Commercial Space Transportation Regulations

AGENCY: Federal Aviation Administration (FAA), DOT.

ACTION: Notice of proposed rulemaking (NPRM).

SUMMARY: This proposal would prohibit obtrusive space advertising and make other minor changes to the regulations governing commercial space transportation. The proposed changes are necessary to reflect a statutory change, capture current practice, and to correct errors in a table. The purpose of the changes is to give the public and the regulated industry accurate and current information.

DATES: Send your comments on or before July 18, 2005.

ADDRESSES: You may send comments identified by Docket Number FAA–2004 using any of the following methods:

- *DOT Docket Web Site:* Go to *http://dms.dot.gov* and follow the instructions for sending your comments electronically.
- *Government-wide Rulemaking Web Site:* Go to *http://www.regulations.gov* and follow the instructions for sending your comments electronically.
- *Mail:* Docket Management Facility; U.S. Department of Transportation, 400 Seventh Street, SW., Nassif Building, Room PL–401, Washington, DC 20590–001.
- *Fax:* 1–202–493–2251.
- *Hand Delivery:* Room PL–401 on the plaza level of the Nassif Building, 400 Seventh Street, SW., Washington, DC, between 9 a.m. and 5 p.m., Monday through Friday, except Federal holidays.

For more information on the rulemaking process, see the **SUPPLEMENTARY INFORMATION** section of this document.

Privacy: We will post all comments we receive, without change, to *http://dms.dot.gov,* including any personal information you provide. For more information, see the Privacy Act discussion in the **SUPPLEMENTARY INFORMATION** section of this document.

Docket: To read background documents or comments received, go to *http://dms.dot.gov* at any time or to Room PL–401 on the plaza level of the Nassif Building, 400 Seventh Street, SW., Washington, DC, between 9 a.m. and 5 p.m., Monday through Friday, except Federal holidays.

FOR FURTHER INFORMATION CONTACT: Michelle Murray, Office of Commercial Space Transportation (AST), Federal Aviation Administration, 800 Independence Avenue SW., Washington, DC 20591; telephone (202) 267–7892.

SUPPLEMENTARY INFORMATION:

Comments Invited

The FAA invites interested persons to participate in this rulemaking by submitting written comments, data, or views. We also invite comments relating to the economic, environmental, energy, or federalism impacts that might result from adopting the proposals in this document. The most helpful comments reference a specific portion of the proposal, explain the reason for any recommended change, and include supporting data. We ask that you send us two copies of written comments.

We will file in the docket all comments we receive, as well as a report summarizing each substantive public contact with FAA personnel concerning this proposed rulemaking. The docket is available for public inspection before and after the comment closing date. If you wish to review the docket in person, go to the address in the **ADDRESSES** section of this preamble between 9 a.m. and 5 p.m., Monday through Friday, except Federal holidays. You may also review the docket using the Internet at the Web address in the **ADDRESSES** section.

Privacy Act: Using the search function of our docket Web site, anyone can find and read the comments received into any of our dockets, including the name of the individual sending the comment (or signing the comment on behalf of an association, business, labor union, etc.). You may review DOT's complete Privacy Act Statement in the **Federal Register** published on April 11, 2000 (65 FR 19477–78) or you may visit *http://dms.dot.gov.*

Before acting on this proposal, we will consider all comments we receive on or before the closing date for comments. We will consider comments filed late if it is possible to do so without incurring expense or delay. We may change this proposal in light of the comments we receive.

If you want the FAA to acknowledge receipt of your comments on this proposal, include with your comments a pre-addressed, stamped postcard on which the docket number appears. We will stamp the date on the postcard and mail it to you.

Availability of Rulemaking Documents

You can get an electronic copy using the Internet by:

(1) Searching the Department of Transportation's electronic Docket Management System (DMS) Web page (*http://dms.dot.gov/search*);

(2) Visiting the Office of Rulemaking's Web page at *http://www.faa.gov/avr/arm/index.cfm*; or

(3) Accessing the Government Printing Office's Web page at *http://www.access.gpo.gov/su_docs/aces/aces140.html.*

You can also get a copy by submitting a request to the Federal Aviation Administration, Office of Rulemaking, ARM–1, 800 Independence Avenue SW., Washington, DC 20591, or by calling (202) 267–9680. Make sure to identify the docket number, notice number, or amendment number of this rulemaking.

Background

The Commercial Space Launch Act of 1984, as codified at 49 U.S.C. subtitle IX, chapter 701, authorizes the Secretary of Transportation to oversee, license, and regulate non-Federal launch activities, including commercial launches carried out by U.S. citizens or within the United States and, in doing so, to safeguard public health and safety, safety of property, and the national security and foreign policy interests of the United States. The Secretary has delegated this responsibility to the FAA Administrator who, in turn, has further delegated it to the Associate Administrator for Commercial Space Transportation. The following paragraphs describe the changes we are proposing to make in the regulations we have adopted to carry out the purposes of the Commercial Space Launch Act, as amended.

Sections 401.5 and 415.51 Prohibition of Obtrusive Space Advertising

The National Aeronautics and Space Administration Authorization Act of 2000 (Pub. L. 106–391) amended 49 U.S.C. chapter 701 to add a prohibition against ''obtrusive'' space advertising. Space advertising is a new form of advertisement that may become more widespread as the space industry develops. This form of advertisement has traditionally been limited to such activities as placing logos on payloads, uniforms, launch vehicles, launch facilities, and launch infrastructure. Besides these traditional forms of advertisement, space also offers the ability to promote messages in entirely new ways. Objects placed in orbit, if large enough, could be seen by people

around the world for long periods of time. Their visibility in the sky could have adverse effects on the general public and astronomers. Large advertisements could destroy the darkness of the night sky. Their size and light emissions could impede astronomical observations that rely on a dark celestial environment. These are the type of adverse effects that indicate advertising is obtrusive.

Obtrusive space advertising, as defined in 49 U.S.C. chapter 701, is ''advertising in outer space that is capable of being recognized by a human being on the surface of the Earth without the aid of a telescope or other technological device.'' 49 U.S.C. 70102. Although the statute gives the FAA the authority to prohibit obtrusive space advertising using a payload, current regulations do not reflect this authority. For this reason, we are proposing to add a definition of ''obtrusive space advertising'' to our general definitions section at 14 CFR 401.5. The language of the definition is the same as that contained in the statute. We are also proposing to add to existing 14 CFR 415.51 a statement that we will review a payload proposed for launch to determine if the launch of the payload would result in obtrusive space advertising.

An example of a proposed payload that would have been obtrusive space advertising came from a space company that proposed to launch a group of large billboards into low Earth orbit. Viewed from Earth, these billboards would have appeared as large as the Moon and been visible to millions of people around the world without the aid of a telescope or other technological device. The FAA is requesting comments from the public on what would clearly differentiate between obtrusive and non-obtrusive types of space advertising.

Section 404.3 Waiver of the Requirement for a License

The FAA proposes to amend 14 CFR 404.3 to allow the Associate Administrator to waive the requirement for a launch license under 14 CFR 415 for launches that are not ''amateur rocket activities,'' as defined at 14 CFR 401.5, that are in the public interest and will not jeopardize public health and safety, the safety of property, or any national security or foreign policy interest of the United States. The Commercial Space Act of 1998 (Pub. L. 105–303) modified section 70105(b)(3) of the Commercial Space Launch Act to allow the Associate Administrator to waive the requirement to obtain a license for an individual applicant. The Associate Administrator must determine that the waiver is in the public interest and will not jeopardize the public health and safety, the safety of property, or any national security or foreign policy interest of the United States. We are proposing to update our regulations to reflect this authority.

Section 404.5 Petition for Reconsideration

We are proposing to amend 14 CFR 404.5 by adding a process for reconsidering a denial of a waiver. The proposed addition of a license waiver process to 14 CFR 404.3 highlighted the fact that our existing petition processes do not allow for reconsideration of a denial of a waiver or petition.

Currently, 14 CFR 404.5(b) allows the Associate Administrator for Commercial Space Transportation to grant a petition for a waiver if the waiver is in the public interest and will not jeopardize public health and safety, the safety or property, or any national security or foreign policy interest of the United States. Existing 14 CFR 404.5(c) provides that if the Associate Administrator determines that the petition does not justify granting the waiver, the petition is denied.

Proposed 14 CFR 404.5(e) would allow a petitioner to request reconsideration of a petition denial within 60 days of the date of the denial. For FAA to accept the petition, it would have to show either of the following:

- The petitioner has a significant additional fact and a reason for not presenting it in the original petition,
- The FAA made an important factual error in the denial of the original petition, or
- The denial by the FAA is not in accordance with applicable law and regulations.

Section 413.7(c) Signature and Certification of Accuracy of an Application

Existing 14 CFR 413.7(c)(1) requires that an application for licensed activities must be legibly signed, dated, and certified as true, complete, and accurate by an *officer* authorized to act for the corporation (italics added) in licensing matters. To reduce the burden of licensing on the commercial space industry, the FAA proposes to amend 14 CFR 413.7(c)(1) to allow corporations to designate a person to sign applications who is not an officer of the corporation. For large corporations, the requirement for an officer of the company to submit an application is often difficult. Getting the original application signed by an officer may not be difficult, but the final application usually includes additional material than just the original application. It is sometimes difficult for all additional information or data to be signed off by an officer of the corporation. The application process would be streamlined if an officer of a corporation could delegate his or her responsibility in licensing matters.

Part 420 Appendix C Correction of Table C–3

Appendix C to part 420 provides a method for an applicant to estimate the expected casualty (Ec) for a launch of a guided expendable launch vehicle using a flight corridor generated either by appendix A or appendix B to part 420. As part of the calculation, a casualty area lookup table is used. Recent analysis has shown that expected casualty values generated by appendix C are overly conservative, and that this conservatism stems largely from the overly conservative casualty areas in Table C–3. We are proposing to replace the lookup table to reflect more realistic casualty areas, which in turn will produce more reasonable Ec values. The new values will be, on average, an order of magnitude lower than their original counterparts. This change would affect launch site applicants who wish to use the appendix C method to comply with part 420.

Paperwork Reduction Act

The Paperwork Reduction Act of 1995 (44 U.S.C. 3507(d)) requires that the FAA consider the impact of paperwork and other information collection burdens imposed on the public. We have determined that there are no new information collection requirements associated with this proposed rule.

Economic Evaluation

Proposed changes to Federal regulations must undergo several economic analyses. First, Executive Order 12866 directs each Federal agency proposing or adopting a regulation to proceed only upon a reasoned determination that the benefits of the intended regulation justify its costs. Second, the Regulatory Flexibility Act of 1980 requires agencies to analyze the economic impact of regulatory changes on small entities. Third, the Trade Agreements Act (19 U.S.C. 2531–2533) prohibits agencies from setting standards that create unnecessary obstacles to the foreign commerce of the United States. In developing U.S. standards, this Trade Act requires agencies to consider international standards and, where appropriate, that they be the basis for U.S. standards. Fourth, the Unfunded Mandates Reform Act of 1995 (Pub. L. 104–4) requires agencies to prepare a written assessment

of the costs, benefits, and other effects of proposed or final rules that include a Federal mandate likely to result in the expenditure by State, local, or tribal governments, in the aggregate, or by the private sector, of $100 million or more annually (adjusted for inflation). The FAA currently uses an inflation-adjusted value of $120.7 million in lieu of $100 million.

If it is determined that the expected impact is so minimal that the proposal does not warrant a full evaluation, this order permits a statement to that effect and the basis for it to be included in the preamble and a full regulatory cost benefit evaluation need not be prepared.

The proposed rule would prohibit FAA from authorizing for launch those payloads that result in obtrusive space advertising. The prohibition became law when chapter 701 of title 49 of the United States Code was amended to forbid the launch of payloads for the purpose of obtrusively advertising from space. This prohibition would primarily affect advertising entities that seek to use space as a medium for product or message promotion. The proposed rule would codify current practice and procedures of the Associate Administrator for Commercial Space Transportation since the amendment to chapter 701 of title 49 of the United States Code went into effect. As such, there would be no benefits gained or costs incurred.

The proposed rule regarding license waivers would amend 14 CFR 404.3 to allow the FAA to waive the requirement for a license when the Associate Administrator for Commercial Space Transportation determines that waiving the requirement for a license is in the public interest and will not jeopardize public health and safety, the safety of property, or any national security or foreign policy interest of the United States. The license waiver amendment would codify current practice and procedures as established in the Commercial Space Act of 1998. Since the amendment would codify current practice and procedures, there should be no costs or benefits.

The proposed rule would amend 14 CFR 404.5 to allow for reconsideration of a denial of a waiver. This change would provide due process to a person whose petition for a waiver or exemption was denied by FAA. There is the potential for a cost savings if the petitioner can show that FAA has made a factual error or has not correctly applied existing law to a waiver request.

The proposed rule regarding the delegation of signing off for licensing matters would amend 14 CFR 413.7(c) to allow corporations to designate a duly appointed person to sign in licensing matters who is not an officer of the corporation. Currently, only an officer authorized to act for the corporation in licensing matters has this signature authority. The proposal would reduce the burden of licensing on the commercial space transportation industry by allowing corporations to delegate this authority to a person other than a corporate officer. The proposal would expedite the licensing process because if the corporate officer were not available the delegated person could act in his or her place. The overall impact could result in a cost savings.

The proposal would change Table C–3 of appendix C in part 420 to correct values of the effective casualty area. An effective casualty area is defined in 14 CFR 420.5 as the aggregate casualty area of each piece of debris created by a launch vehicle failure at a particular point on its trajectory. Launch site applicants seeking a license to operate a site where guided expendable launch vehicles may be launched use these casualty areas to calculate the expected casualty of a proposed vehicle along a specified flight corridor. The rule would affect launch site operator or license applicants who wish to use appendix C to comply with part 420. Launch vehicle operators would not be affected by this rule because each vehicle they propose to launch from a site would require the use of their vehicle-specific attributes instead of the above mentioned table values when calculating the effective casualty area.

The proposal would allow for more accurate expected casualty calculations for the launch of a guided expendable launch vehicle. The primary benefit from the change is that more sites would initially qualify for a launch site operator license. In addition, once a site is authorized, each launch vehicle operator would still have to undertake a much higher fidelity Ec analysis to obtain a license to launch from that site.

Since this final rule merely revises and clarifies FAA rulemaking procedures, the expected outcome will have a minimal impact with possible cost savings to the industry, and a regulatory evaluation was not prepared. The FAA requests comments with supporting justification regarding the FAA determination of minimal impact.

Initial Regulatory Flexibility Determination

The Regulatory Flexibility Act of 1980 (RFA) establishes ''as a principle of regulatory issuance that agencies shall endeavor, consistent with the objective of the rule and of applicable statutes, to fit regulatory and informational requirements to the scale of the business, organizations, and governmental jurisdictions subject to regulation.'' To achieve that principle, the RFA requires agencies to solicit and consider flexible regulatory proposals and to explain the rationale for their actions. The RFA covers a wide-range of small entities, including small businesses, not-for-profit organizations and small governmental jurisdictions.

Agencies must perform a review to determine whether a proposed or final rule will have a significant economic impact on a substantial number of small entities. If the determination is that it will, the agency must prepare a regulatory flexibility analysis as described in the RFA.

However, if an agency determines that a proposed or final rule is not expected to have a significant economic impact on a substantial number of small entities, section 605(b) of the 1980 RFA provides that the head of the agency may so certify and a regulatory flexibility analysis is not required. The certification must include a statement providing the factual basis for this determination, and the reasoning should be clear.

In view of the minimal cost impact of the proposed rule, the FAA has determined that this proposed rule would have no significant economic impact on a substantial number of small entities. Consequently, the FAA certifies that the proposed rule would not have a significant economic impact on a substantial number of small entities. The FAA invites industry comments and requests that all comments be accompanied with clear and detailed supporting data.

International Trade Impact Analysis

The Trade Agreement Act of 1979 prohibits Federal agencies from establishing any standards or engaging in related activities that create unnecessary obstacles to the foreign commerce of the United States. Legitimate domestic objectives, such as safety, are not considered unnecessary obstacles. The statute also requires consideration of international standards and, where appropriate, that they be the basis for U.S. standards. The FAA has assessed the proposed rule and determined that it would likely have only a domestic impact and therefore no effect on any trade-sensitive activity.

Unfunded Mandates Assessment

The Unfunded Mandates Reform Act of 1995 (the Act) is intended, among other things, to curb the practice of imposing unfunded Federal mandates on State, local, and tribal governments.

Title II of the Act requires each Federal agency to prepare a written statement assessing the effects of any Federal mandate in a proposed or final agency rule that may result in an expenditure of $100 million or more (adjusted annually for inflation) in any one year by State, local, and tribal governments, in the aggregate, or by the private sector; such a mandate is deemed to be a ''significant regulatory action.'' The FAA currently uses an inflation-adjusted value of $120.7 million in lieu of $100 million.

This proposed rule does not contain such a mandate. The requirements of Title II do not apply.

Executive Order 13132, Federalism

The FAA has analyzed this proposed rule under the principles and criteria of Executive Order 13132, Federalism. We determined that this action would not have a substantial direct effect on the States, on the relationship between the national Government and the States, or on the distribution of power and responsibilities among the various levels of government, and therefore would not have federalism implications.

Environmental Analysis

FAA Order 1050.1E identifies FAA actions that are categorically excluded from preparation of an environmental assessment or environmental impact statement under the National Environmental Policy Act in the absence of extraordinary circumstances. The FAA has determined this proposed rulemaking action qualifies for the categorical exclusion identified in paragraph 312(d) and involves no extraordinary circumstances.

Regulations That Significantly Affect Energy Supply, Distribution, or Use

The FAA has analyzed this NPRM under Executive Order 13211, Actions Concerning Regulations that Significantly Affect Energy Supply, Distribution, or Use (May 18, 2001). We have determined that it is not a ''significant energy action'' under the executive order because it is not a ''significant regulatory action'' under Executive Order 12866, and it is not likely to have a significant adverse effect on the supply, distribution, or use of energy.

List of Subjects in

14 CFR Part 401

Organization and functions (Government agencies), Space transportation and exploration.

14 CFR Part 404

Administrative practice and procedure, Space transportation and exploration.

14 CFR Part 413

Confidential business information, Space transportation and exploration.

14 CFR Part 415

Aviation safety, Environmental protection, Space transportation and exploration.

14 CFR Part 420

Environmental protection, Reporting and recordkeeping requirements, Space transportation and exploration.

The Proposed Amendment

For the reasons stated in the preamble, the Federal Aviation Administration proposes to amend 14 CFR chapter III as set forth below:

PART 401—ORGANIZATION AND DEFINITIONS

1. The authority citation for part 401 continues to read as follows:

Authority: 49 U.S.C. 70101–70121.

2. Amend § 401.5 to add the following definition in alphabetical order:

§ 401.5 Definitions.

* * * * *

Obtrusive space advertising means advertising in outer space that is capable of being recognized by a human being on the surface of the Earth without the aid of a telescope or other technological device.

* * * * *

PART 404—REGULATIONS AND LICENSING REQUIREMENTS

3. The authority citation for part 404 continues to read as follows:

Authority: 49 U.S.C. 70101–70121.

4. Revise § 404.3 to read as follows:

§ 404.3 Filing of petitions to the Associate Administrator.

(a) Any person may petition the Associate Administrator to:

(1) Issue, amend, or repeal a regulation to eliminate as a requirement for a license any requirement of Federal law applicable to commercial space launch and reentry activities and the operation of launch and reentry sites;

(2) Waive any such requirement in the context of a specific application for a license; or

(3) Waive the requirement for a license.

(b) Each petition filed under this section must:

(1) Be submitted in duplicate to the Documentary Services Division, Attention Docket Section, Room 4107, U.S. Department of Transportation, 400 Seventh Street, SW., Washington, DC 20590;

(2) Set forth the text or substance of the regulation or amendment proposed, the regulation to be repealed, the licensing requirement to be eliminated or waived, or the type of license to be waived;

(3) In the case of a petition for a waiver of a particular licensing requirement, explain the nature and extent of the relief sought;

(4) Contain any facts, views, and data available to the petitioner to support the action requested; and

(5) In the case of a petition for a waiver, be submitted at least 60 days before the proposed effective date of the waiver unless good cause for later submission is shown in the petition.

(c) A petition for rulemaking filed under this section must contain a summary, which the Associate Administrator may cause to be published in the **Federal Register**, which includes:

(1) A brief description of the general nature of the action requested; and

(2) A brief description of the pertinent reasons presented in the petition for instituting the rulemaking.

5. Amend § 404.5 by adding new paragraph (e) to read as follows:

§ 404.5 Action on petitions.

* * * * *

(e) *Reconsideration.* Any person may petition FAA to reconsider a denial of a petition the person had filed. The petitioner must send a request for reconsideration to the same address to which the original petition went. For FAA to accept the petition, the petitioner must show the following:

(1) There is a significant additional fact and the reason it was not included in the original petition;

(2) FAA made an important factual error in our denial of the original petition; or

(3) The denial by the FAA is not in accordance with the applicable law and regulations.

PART 413—LICENSE APPLICATION PROCEDURES

6. The authority citation for part 413 continues to read as follows:

Authority: 49 U.S.C. 70101–70121.

7. Amend § 413.7 by revising paragraph (c)(1) to read as follows:

§ 413.7 Application.

* * * * *

(c) * * *

(1) *For a corporation:* An officer or other individual duly authorized to act for the corporation in licensing matters.

* * * * *

PART 415—LAUNCH LICENSE

8. The authority citation for part 415 continues to read as follows:

Authority: 49 U.S.C. 70101–70121.

9. Revise § 415.51 to read as follows:

§ 415.51 General.

(a) The FAA reviews a payload proposed for launch to determine whether a license applicant or payload owner or operator has obtained all required licenses, authorization, and permits, unless the payload is exempt from review under § 415.53 of this subpart. If not otherwise exempt, the FAA reviews a payload proposed for launch to determine whether its launch would jeopardize public health and safety, safety of property, U.S. national security or foreign policy interests, or international obligations of the United States.

(b) The FAA also reviews a payload proposed for launch to determine if the launch of the payload would result in obtrusive space advertising. No payload, whether exempt from review or not, may be launched under a launch license if it results in obtrusive space advertising.

(c) A payload determination is part of the licensing record on which the FAA's licensing determination is based.

10. Amend § 415.59 by revising paragraphs (a)(7) and (8) and by adding paragraph (a)(9) to read as follows:

§ 415.59 Information requirements for payload review.

* * * * *

(a) * * *

(7) Intended payload operations during the life of the payload;

(8) Delivery point in flight at which the payload will no longer be under the licensee's control; and

(9) Any material to be used for the purposes of advertising.

* * * * *

PART 420—LICENSE TO OPERATE A LAUNCH SITE

11. The authority citation for part 420 continues to read as follows:

Authority: 49 U.S.C. 70101–70121.

12. Revise Table C–3 of appendix C to part 420 to read as follows:

Appendix C to Part 420—Risk Analysis

* * * * *

TABLE C–3.—EFFECTIVE CASUALTY AREA (MILES^2) AS A FUNCTION OF IIP RANGE (NM)

Instantaneous impact point range (nautical miles)	Orbital launch vehicles				Suborbital launch vehicles
	Small	Medium	Medium large	Large	Guided
0–49	3.14×10^{-2}	1.28×10^{-1}	4.71×10^{-2}	8.59×10^{-2}	4.3×10^{-1}
50–1749	2.47×10^{-2}	2.98×10^{-2}	9.82×10^{-3}	2.45×10^{-2}	1.3×10^{-1}
1750–5000	3.01×10^{-4}	5.52×10^{-3}	7.82×10^{-3}	1.14×10^{-2}	3.59×10^{-6}

* * * * *

Issued in Washington, DC on May 10, 2005.

Patricia Grace Smith,

Associate Administrator for Commercial Space Transportation.

[FR Doc. 05–9705 Filed 5–18–05; 8:45 am]

BILLING CODE 4910–13–P

Federal Register

Thursday,
May 19, 2005

Part VII

Department of Transportation

Pipeline and Hazardous Materials Safety Administration

49 CFR Parts 171, 172, 173, 175

Hazardous Materials: Infectious Substances; Harmonization With the United Nations Recommendations; Proposed Rule

DEPARTMENT OF TRANSPORTATION

Pipeline and Hazardous Materials Safety Administration

49 CFR Parts 171, 172, 173, 175

[Docket No. PHMSA–2004–16895 (HM–226A)]

RIN 2137–AD93

Hazardous Materials: Infectious Substances; Harmonization With the United Nations Recommendations

AGENCY: Pipeline and Hazardous Materials Safety Administration (PHMSA), Department of Transportation (DOT).

ACTION: Notice of proposed rulemaking (NPRM).

SUMMARY: PHMSA is proposing to revise the transportation requirements for infectious substances, including regulated medical waste, to adopt new classification criteria and packaging requirements consistent with revised international standards and to clarify existing requirements to promote compliance. These proposed revisions will ensure an acceptable level of safety for the transportation of infectious substances and facilitate domestic and international transportation.

DATES: Comments must be received by July 18, 2005.

ADDRESSES: You may submit comments by any of the following methods:

Federal eRulemaking Portal: http://www.regulations.gov. Follow the online instructions for submitting comments.

Web Site: http://dms.dot.gov. Follow the instructions for submitting comments on the DOT electronic docket site. You may view the public docket through the Internet at *http://dms.dot.gov* or in person at the Docket Management System office at the above address.

Fax: 1–202–493–2251

Mail: Docket Management System, U.S. Department of Transportation, 400 Seventh Street, SW., Nassif Building, Room PL–401, Washington, DC 20590–0001.

Hand Delivery: To the Dockets Management System; Room PL–401 on the plaza level of the Nassif Building, 400 Seventh Street, SW., Washington, DC between 9 a.m. and 5 p.m., Monday through Friday, except Federal holidays.

Instructions: You must include the agency name (Pipeline and Hazardous Materials Safety Administration) and docket number (PHMSA–2004–16895 (HM–226A)) or the Regulatory Identification Number (RIN) for this notice at the beginning of your comments. You should submit two copies of your comments if you submit them by mail. If you wish to receive confirmation that we received your comments, you must include a self-addressed stamped postcard. Note that all comments received will be posted without change to ''*http://dms.dot.gov*'', including any personal information provided, and will be accessible to Internet users. Please see the Privacy Act section of this document.

FOR FURTHER INFORMATION CONTACT: Eileen Edmonson or Deborah Boothe, Office of Hazardous Materials Standards, (202) 366–8553, Pipeline and Hazardous Materials Safety Administration, U.S. Department of Transportation.

SUPPLEMENTARY INFORMATION:

I. Background

On August 14, 2002, the Research and Special Programs Administration (RSPA), the predecessor agency to the Pipeline and Hazardous Materials Safety Administration (PHMSA), published a final rule revising the requirements in the Hazardous Materials Regulations (HMR; 49 CFR Parts 171–180) applicable to the transportation of infectious substances, including regulated medical waste (67 FR 53118). The final rule made the following changes to the HMR:

- Adopted new classification criteria for infectious substances based on defining criteria developed by the World Health Organization (WHO) and consistent with standards contained in the 12th Revised Edition of the United Nations Recommendations on the Transport of Dangerous Goods (UN Recommendations) and the 2003–2004 Edition of the International Civil Aviation Organization's Technical Instructions for the Safe Transport of Dangerous Goods by Air (ICAO Technical Instructions).
- Revised packaging requirements for Division 6.2 materials for consistency with international performance standards.
- Eliminated an exception from requirements in the HMR for diagnostic specimens and adopted certain packaging and hazard communication requirements for these materials. Diagnostic specimens transported by private or contract carriers in motor vehicles used exclusively for diagnostic specimens continue to be excepted from most requirements in the HMR.
- Modified an exception from requirements in the HMR for biological products, limiting the exception to biological products licensed for use under current Food and Drug Administration (FDA) or U.S. Department of Agriculture (USDA) regulations.
- Adopted bulk packaging options for the transportation of regulated medical waste (RMW), based on exemption provisions.
- Established new hazard communication requirements for shipments of Division 6.2 materials.

The requirements in the August 14, 2002 final rule became effective on February 14, 2003.

II. Issues Related to Current Requirements

Our August 14, 2002 final rule adopted a risk-group-based classification system for infectious substances based on criteria in the UN Recommendations. The final rule requires Division 6.2 materials to be assigned to risk groups based on the degree to which they cause injury through disease, with Risk Group 1 presenting the lowest risk and Risk Group 4 presenting the highest risk. Assignment of an infectious substance to a risk group is based on the known medical history of the source patient or animal, endemic local conditions, symptoms of the source patient or animal, or professional judgment concerning individual circumstances of the source patient or animal. Division 6.2 materials assigned to Risk Group 1 are excepted from the HMR and the UN Recommendations.

The current requirements for assigning pathogens to risk groups are based on the risks posed in the laboratory environment, not in the transportation environment. Pathogens in transport do not pose the same level of risk that they do in the laboratory. Laboratory workers perform extensive manipulations of infectious substances that place the workers at higher risk of infection because of accidental exposures caused by splashes or spills. Moreover, certain laboratory processes—such as vortexing, mixing, or centrifuging—can generate aerosols or airborne particles that can place workers who perform such operations at increased risk. These conditions do not exist in transport.

The risk group classification system resulted in transportation problems, including shipper confusion in assigning risk groups, and shipment delays or refusal to transport associated with carriers' and transport workers' perceptions about the risks associated with the transportation of infectious substances. A delay in transportation or a refusal to transport a specimen may have life-threatening implications for a patient or a population. Moreover,

transportation problems can delay research necessary to develop treatments or slow the spread of disease, and can interfere with the implementation of appropriate measures to address new disease outbreaks. Because of these transportation problems, the UN Committee of Experts on the Transport of Dangerous Goods worked with scientists and public health professionals at WHO, the U.S. Centers for Disease Control and Prevention (CDC), and other agencies to develop a classification scheme for infectious substances that would be more appropriate for the transportation environment.

In December 2002, the United Nations adopted a number of revisions for the 13th Revised Edition of the UN Recommendations related to the transportation of infectious substances, primarily involving how infectious substances are classed and packaged. In July 2004, the UN Committee of Experts on Dangerous Goods recommended further revisions to these standards; these revisions were adopted for the 14th Revised Edition of the UN Recommendations in December 2004. At the same time, the ICAO Dangerous Goods panel adopted many of the amendments for the 14th Revised Edition of the UN Recommendations in the 2005–2006 Edition of the ICAO Technical Instructions through an addendum to the ICAO Technical Instructions.

The amendments in the 13th and 14th Editions of the UN Recommendations are the result of long and thoughtful consultations among regulators, scientists, medical professionals, and the transport community. The result is a set of standards for the transportation of infectious substances that are easier to use and impose a high level of safety appropriate to the degree of risk and conditions of transport.

The requirements adopted for the UN Recommendations establish a two-tiered classification system for Division 6.2 materials—Category A and Category B. A Category A infectious substance poses a higher degree of risk than a Category B infectious substance. A Category A material is an infectious substance that is transported in a form that is capable of causing permanent disability or life-threatening or fatal disease to otherwise healthy humans or animals when exposure to it occurs. An exposure occurs when an infectious substance is released outside of its protective packaging, resulting in physical contact with humans or animals. Category A infectious substances are assigned to UN 2814 (for substances that cause disease in humans or in both humans and animals) or UN 2900 (for substances that cause disease in animals only). The following are examples of Category A infectious substances. Please note this list is not all inclusive and is provided only as guidance.

UN number and proper shipping name	Micro-organism
UN 2814:	
Infectious substances affecting humans and animals	Bacillus anthracis (cultures only)
	Brucella abortus (cultures only)
	Brucella melitensis (cultures only)
	Brucella suis (cultures only)
	Burkholderia mallei—Pseudomonas mallei—Glanders (cultures only)
	Burkholderia pseudomallei—Pseudomonas pseudomallei (cultures only)
	Chlamydia psittaci—avian strains (cultures only)
	Clostridium botulinum (cultures only)
	Coccidioides immitis (cultures only)
	Coxiella burnetti (cultures only)
	Crimean-Congo hemorrhagic fever virus
	Dengue virus (cultures only)
	Eastern equine encephalitis virus (cultures only)
	Escherichia coli, verotoxigenic (cultures only)
	Ebola virus
	Flexal virus
	Francisella tularensis (cultures only)
	Guanarito virus
	Hantaan virus
	Hantaviruses causing hemorrhagic fever with renal syndrome
	Hendra virus
	Herpes B virus (cultures only)
	Human immunodeficiency virus (cultures only)
	Highly pathogenic avian influenza virus (cultures only)
	Japanese Encephalitis virus (cultures only)
	Junin virus
	Kyasanur forest disease virus
	Lassa virus
	Machupo virus
	Marburg virus
	Monkeypox virus
	Mycobacterium tuberculosis (cultures only)
	Nipah virus
	Omsk hemorrhagic fever virus
	Poliovirus (cultures only)
	Rabies and other lyssaviruses (cultures only)
	Rickettsia prowazekii (cultures only)
	Rickettsia rickettsia (cultures only)
	Rift Valley fever virus
	Russian spring-summer encephalitis virus (cultures only)
	Sabia virus
	Shigella dysenteriae type I (cultures only)
	Tick-borne encephalitis virus (cultures only)
	Variola virus

UN number and proper shipping name	Micro-organism
UN 2900: Infectious substances affecting animals only	Venezuelan equine encephalitis virus Vesicular stomatitis virus (cultures only) West Nile virus (cultures only) Yellow fever virus (cultures only) Yersinia pestis (cultures only) African swine fever virus (cultures only) Avian paramyxovirus Type 1—Velogenic Newcastle disease virus (cultures only) Classical swine fever virus (cultures only) Foot and mouth disease virus (cultures only) Lumpy skin disease virus (cultures only) Mycoplasma mycoides—Contagious bovine pleuropneumonia (cultures only) Peste des petits ruminants virus (cultures only) Rinderpest virus (cultures only) Sheep-pox virus (cultures only) Goatpox virus (cultures only) Swine vesicular disease virus (cultures only)

Under the UN Recommendations, Category A infectious substances are packaged in UN specification packagings that consist of a watertight primary receptacle or receptacles; a watertight secondary packaging; for liquid materials, absorbent material in sufficient quantity to absorb the entire contents; and a rigid outer packaging of adequate strength for its capacity, mass, and intended use. The completed packaging must pass specified performance tests, including a drop test and a water-spray test, and must be capable of withstanding, without leakage, an internal pressure producing a pressure differential of not less than 95 kPa (0.95 bar, 14 psi). The completed packaging must also be capable of withstanding, without leakage, temperatures in the range of −40 °C to +55 °C (−40 °F to 131 °F). The completed package must be labeled with a Division 6.2 label and must be accompanied by appropriate shipping documentation. The packaging specified for Category A infectious substances is consistent with the packaging currently required for infectious substances assigned to UN 2814 or UN 2900.

A Category B infectious substance is one that does not meet the criteria for inclusion in Category A. A Category B infectious substance does not cause permanent disability or life-threatening or fatal disease to humans or animals when exposure to it occurs. Under the provisions of the 13th Edition of the UN Recommendations, adopted in December 2002, a Category B infectious substance is described as ''Diagnostic Specimen'' or ''Clinical Specimen'' and assigned to UN 3373.

The Category A and B designations developed for purposes of transportation are different from the Category A and B designations for agents of bioterrorism developed by the Centers for Disease Control and Prevention (CDC) and the National Institutes of Health (NIH). The critieria for inclusion in these categories differ, and, although there is some overlap, the lists should not be confused. It is extremely important that persons offering infectious materials for transportation in commerce assign infectious substances to the appropriate category to avoid inappropriate packaging for the materials.

Historically, the HMR have permitted a proper shipping name, such as ''Diagnostic specimen,'' listed in the § 172.101 Table to be used to describe a non-hazardous material on a shipping paper and package marking provided the UN or NA identification number is not included. See §§ 172.202(e) and 172.303(b)(3). However, adoption of the proper shipping names ''Diagnostic Specimen'' and ''Clinical Specimen'' in the 13th Edition of the UN Recommendations and in the 2005–2006 ICAO Technical Instructions, and adoption of the proper shipping name ''Diagnostic specimen'' in the HMR have resulted in some confusion on the part of both shippers and carriers who are accustomed to using these terms to refer to human or animal samples that have a low probability of containing an infectious pathogen. In addition, using these terms to describe shipments of Category B infectious substances is not completely accurate—there are many shipments of Category B infectious substances that may not be diagnostic specimens as that term is usually defined.

The UN Sub-Committee of Experts on the Transport of Dangerous Goods discussed the proper shipping name issue during its July 2004 meeting and agreed to adopt a different proper shipping name for Category B infectious substances—''Biological substance, Category B.'' The UN adopted this proper shipping name for the 14th Revised Edition of the UN Recommendations, which is effective January 1, 2007; ICAO adopted the new proper shipping name through an addendum to the 2005–2006 ICAO Technical Instructions. The addendum permits use of the new proper shipping name as an alternative to ''Diagnostic Specimen'' or ''Clinical Specimen'' until January 1, 2007, at which time the new name must be used.

Under the UN Recommendations, a Category B infectious substance is packaged in a packaging consisting of a leakproof primary receptacle, a leakproof secondary packaging, and a rigid outer packaging. At least one surface of the outer packaging must have a minimum dimension of 100 mm by 100 mm (3.9 inches). The packaging must be of good quality and strong enough to withstand the shocks and loadings normally encountered during transportation. For liquid materials, the secondary packaging must contain absorbent material in sufficient quantities to absorb the entire contents of the primary receptacle or receptacles. The primary or secondary packaging must be capable of withstanding, without leakage, an internal pressure producing a pressure differential of 95 kPa. The packaging must be constructed and closed to prevent any loss of contents that might be caused under normal conditions of transportation by vibration or changes in temperature, humidity, or pressure. The completed packaging must be capable of passing a 1.2-meter (3.9 feet) drop test. The package must be marked with a diamond-shaped marking containing the identification number ''UN 3373'' and with the proper shipping name ''Biological substance, Category B.'' The minimum size for the diamond-shaped mark includes sides at least 50 mm (1.97 inches) long, and letters and numbers at least 6 mm (0.24 inches) high. Under the UN Recommendations, shipments of Category B infectious substances are not

subject to any other transportation requirements.

The 2005–2006 ICAO Technical Instructions, which are based in part on the UN Recommendations, include additional requirements for Category B infectious substances. Specifically, the ICAO Technical Instructions require the proper shipping name; UN number; and name, address, and telephone number of a person knowledgeable about the material to be provided on a written document, such as an air waybill, or on the package.

Representatives of the United States worked closely with the UN Committee of Experts and the ICAO Dangerous Goods Panel to develop the revised requirements for transporting infectious substances. The new requirements are based on a scientific evaluation of the real risks that these materials pose in transportation. Category B infectious substances pose a reduced risk of infection upon exposure based on the way they are transmitted (route of infection) and the number of pathogens required to initiate an infection. Certain infectious substances previously assigned to Risk Group 2 or 3 substances are now assigned to Category B infectious substances and are subject to less stringent regulatory requirements. The Category B packaging provides triple barriers and absorbent and cushioning materials that are designed to prevent leakage of the material during transportation. We believe that the regulations developed for the 13th and 14th Revised Editions of the UN Recommendations provide a less confusing and more appropriate regulatory system than the current risk-group-based system. Therefore, in this NPRM, we are proposing to harmonize the HMR requirements for the transportation of infectious substances with those adopted or expected to be adopted for the UN Recommendations and the ICAO Technical Instructions.

Specific regulatory proposals are discussed in the ''Section-by-Section Review'' section of this preamble.

III. Category A Versus Risk Group 4 Classification

As indicated above, the HMR currently require Division 6.2 materials to be assigned to one of four risk groups based on the degree of risk associated with laboratory manipulation of the pathogen. A Risk Group 4 pathogen is one that usually causes serious human or animal disease and that can be readily transmitted from one individual to another, directly or indirectly, and for which effective treatments and preventive measures are not usually available. A Category A material is an infectious substance that is transported in a form that is capable of causing permanent disability or life-threatening or fatal disease to humans or animals when exposure to it occurs. As the guidance earlier in this document suggests, this new definition may include cultures of materials that previously were considered Risk Group 2 and 3 materials. The transportation requirements for Category A infectious substances are identical to current requirements under both the HMR and the UN Recommendations for Risk Group 4 infectious substances.

The HMR currently provide for exceptions from certain regulatory requirements for Risk Group 2 or 3 infectious substances; however, these exceptions may not be used for Risk Group 4 materials. For example, the HMR currently permit diagnostic specimens, biological products, and regulated medical waste (RMW) that contain Risk Group 2 or 3 infectious substances to be transported as materials of trade (MOTS) in accordance with § 173.6. The MOTS exception may not be used to transport Risk Group 4 materials. In this NPRM, we propose to limit exceptions authorized for the transportation of infectious substances to Category B materials; thus, Category A materials could not be shipped as MOTS. We recognize that this approach somewhat narrows the applicability of the transportation exceptions that are currently permitted under the HMR. In particular, we note that, as proposed in this NPRM, RMW that contains a Category A infectious substance must be transported in accordance with requirements applicable to UN 2814 (infectious substance affecting humans) or UN 2900 (infectious substance affecting animals only) rather than UN 3291 (regulated medical waste). We believe the proposed amendments accurately address the risks posed by these materials; however, we invite commenters to address the transportation impacts, if any, of the proposed revisions.

IV. Notification to Pilot-in-Command

As noted earlier, the proposals in this NPRM are consistent with standards adopted by the UN and ICAO. A major issue associated with ICAO's adoption of the provisions applicable to infectious substances in the 13th Revised Edition of the UN Recommendations was whether or not to require notification to the pilot-in-command (NOPIC) of an aircraft of the presence of Category B infectious substances as cargo on board the aircraft. Under the standards adopted for the UN Recommendations, Category B infectious substances are not accompanied by shipping papers nor must their packages be labeled. The hazard communication required for a package containing a Category B infectious substance is a package marking consisting of ''UN 3373'' in a square-on-point configuration and the words ''Biological substance, Category B'' in association with the UN number. ICAO adopted additional hazard communication requirements for Category B infectious substances. Specifically, the ICAO Technical Instructions require the proper shipping name; UN number; and name, address, and telephone number of a person knowledgeable about the material to be provided on a written document (such as an air waybill) or on the package itself. As noted above, we propose to adopt the ICAO requirements into the HMR for air transportation.

Generally, a NOPIC is required for shipments of hazardous materials subject to the HMR or ICAO Technical Instructions. The NOPIC includes the proper shipping name, hazard class, and identification number of the hazardous material; the total number of packages; the net quantity or gross weight for each package; the location of the packages on the aircraft; any additional information required by the regulations; and confirmation that no damaged or leaking packages have been loaded on the aircraft (see § 175.33 of the HMR and Chapter 4, paragraph 4.1.1, and Chapter 7, paragraph 7.4.1 of the ICAO Technical Instructions). The NOPIC provides the pilot-in-command with information to make critical decisions and take necessary safety precautions in the event of an emergency on board the aircraft.

ICAO narrowly decided against requiring a NOPIC for shipments of Category B infectious substances for the 2005–2006 Edition of the ICAO Technical Instructions. The ICAO vote on the issue was evenly split; an equal number supported a requirement for a NOPIC for Category B infectious substances as opposed the requirement. ICAO members opposed to the requirement cited the low risk in transportation associated with Category B infectious substances, new ICAO requirements for hazard communication for Category B shipments, and the possibility that increased regulation would result in fewer carriers electing to transport Category B shipments. Members supporting the NOPIC requirement cited the benefit of information being available to the pilot and emergency responders in the event of an emergency or an accident. Consistent with the ICAO decision, this

NPRM does not propose to require a NOPIC for Category B infectious substances. However, we invite commenters to address this issue. Should the HMR require a NOPIC for shipments of Category B infectious substances? What would be the benefits or adverse impacts of such a requirement?

V. Transportation of Unknown or Suspected Infectious Substances

The public health community is frequently confronted with outbreaks of disease of unknown etiology and must quickly transport specimens for identification and diagnosis. This rulemaking proposes that, generally, routine samples that are unlikely to contain an infectious substance or where the pathogenicity of the infectious substance is at a level naturally encountered in the environment that will not cause disease when exposure to it occurs may be transported as non-regulated materials. In most other cases, this rulemaking proposes to permit unknown samples shipped for analysis and diagnosis to be transported in accordance with requirements for Category B infectious substances, because, historically, materials meeting this definition have been transported in a similar manner with no adverse safety impact or increased risk to transport workers or the general public. For situations where the identity of the agent or pathogen is not known, but sufficient information is available to strongly suspect a Category A infectious substance, this NPRM proposes to require an indication on shipping papers that the sample contains a Category A infectious material, as follows—''Infectious substances, affecting humans (suspected Category A infectious substance), 6.2, UN 2814''. Suspected Category A infectious substances must be shipped in accordance with all applicable hazard communication and packaging requirements for Category A infectious substances. The determination as to whether to ship an unknown sample as a Category A or Category B infectious substance should be made by appropriate medical or public health officials based on known medical conditions and history of the source patient or animal, endemic local conditions, and symptoms of the source patient or animal.

VI. Security Requirements for Select Agents

Currently, persons who offer for transportation or transport certain infectious substances in commerce must develop and implement security plans in accordance with Subpart I of Part 172 of the HMR. Specific measures implemented as part of the plan may vary commensurate with the level of threat at a particular time. At a minimum, the security plan must address personnel security, unauthorized access, and en route security. For personnel security, the plan must include measures to confirm information provided by job applicants for positions that involve access to and handling of the hazardous materials covered by the plan. For unauthorized access, the plan must include measures to address the risk that unauthorized persons may gain access to materials or transport conveyances being prepared for transportation. For en route security, the plan must include measures to address security risks during transportation, including shipments stored temporarily en route to their destinations.

For infectious substances, the security plan requirements apply to shipments of select agents and toxins regulated by CDC under 42 CFR Part 73. The CDC regulations identify select agents and toxins affecting humans (''HHS Select Agents and Toxins'') and select agents and toxins affecting both humans and animals (''Overlap Select Agents and Toxins''). The USDA regulations at 9 CFR Part 121 identify select agents and toxins affecting animals, in addition to the Overlap Select Agents and Toxins that are also listed in the CDC regulations. USDA regulations at 7 CFR Part 331 identify agents and toxins affecting plants. Select agents and toxins affecting animals only are not currently subject to the security plan requirements. Biological agents and toxins affecting plants only do not meet the definition of an infectious substance under the HMR.

CDC and USDA regulate select agents and toxins because they have the potential to pose a severe threat to the public health and safety. Select agents and toxins affecting animals could be used to compromise public health; therefore, in this NPRM we propose to add the select agents and toxins listed in 9 CFR Part 121 to the list of hazardous materials for which security plans are required. As proposed, persons who offer or transport any of the materials regulated under 9 CFR Part 121 would be required to develop and implement security plans that conform to HMR requirements. We propose to provide six months from the effective date of a final rule for shippers and carriers to come into compliance with this new requirement.

We invite commenters to address whether we should also require persons who offer or transport select agents and toxins that have been found to pose a severe threat to plant health or plant products, regulated by USDA under 7 CFR Part 331, to develop and implement transportation security plans. Such materials could also be used illegitimately to compromise public health.

VII. Sharps Containers

There appears to be some confusion in the regulated community about HMR requirements applicable to sharps containers. The current requirements appear in several places in the regulations. For non-bulk shipments, a sharps container must be a UN specification packaging that is puncture resistant for sharps and sharps with residual fluid as demonstrated by conformance to the design and test requirements in Subpart M of Part 178 at the Packing Group II performance level. A sharps container that conforms to these requirements need not be placed in an outer packaging for transport. A sharps container placed inside a bulk packaging, such as a UN specification Large Packaging or a non-specification bulk outer packaging or wheeled cart, must be puncture resistant. A sharps container that is 20 gallons or less in volume need not be a UN specification packaging if it is to be placed in a bulk outer packaging. A sharps container that is larger than 20 gallons in volume that is placed inside a bulk packaging must be capable of passing the performance tests in Subpart M of Part 178 at the Packing Group II performance level. A sharps container that will be placed in a bulk outer packaging for transportation may be reused only if it is specifically cleared or approved by FDA as a medical device for reuse and must have a capacity of between 2 and 40 gallons.

The HMR include an exception from certain requirements for regulated medical waste (RMW), including sharps, transported by a private or contract carriers (see § 173.134(c)). Under this exception, RMW, including sharps, may be transported in a rigid, non-bulk packaging that conforms to the general packaging requirements of §§ 173.24 and 173.24a and packaging requirements specified in OSHA standards at 29 CFR 1910.1030. The packaging requirements in §§ 173.24 and 173.24a address general packaging issues such as packaging integrity, filling limits, and closures. Specifically with regard to leakproofness, § 173.24(f) requires closures to be leakproof and secured against loosening. The OSHA standards at 29 CFR 1910.1030 require sharps containers to be puncture

resistant and leakproof (see 1910.1030(d)(4)(iii)(A)(1)).

Our enforcement experience indicates that the closures currently being used for sharps containers may not adequately assure that no contents will be released during transportation. Therefore, in this NPRM, we proposed to add specific closure requirements in a number of sections applicable to the transportation of RMW, including sharps. In addition, we invite commenters to consider whether the requirements for sharps containers should be modified. In this regard, we note that certain sharps containers are regulated as medical devices subject to pre-market review by FDA. FDA's pre-market review seeks primarily to address sharps containment in hospital and laboratory settings, not for transportation. It is our understanding, therefore, that sharps containers cleared or approved by FDA may not meet the HMR requirements in §§ 173.197(b) and 173.134(c). For example, FDA reviews marketing applications for sharps containers to determine, among other things, whether they are leak resistant on the sides and bottoms and closures are leak resistant. This is a lesser standard than the leakproofness standard established in the HMR. We ask commenters to address whether the HMR should permit FDA-cleared or -approved sharps containers to be used for the transportation of sharps and, if so, under what circumstances. For example, we could permit FDA-cleared or -approved sharps containers to be used for the transportation of sharps provided such containers are placed inside a leakproof outer packaging.

VIII. Incident Reporting Since February 14, 2003

Under the final rule adopted under Docket HM–226, effective February 14, 2003, air carriers are required to report incidents involving diagnostic specimens in accordance with the incident reporting requirements in §§ 171.15 and 171.16. We conducted a review of incidents involving diagnostic specimens in air transportation. We found that 133 air transport incidents were reported between March and June 2004. Prior to March 2004, carriers reported very few incidents. (A chart summarizing the reported incidents and a detailed listing of the incident reports is included in the docket for this rulemaking.) An analysis of the detailed incident reports indicates that in almost all cases the packages that leaked were not prepared in accordance with the requirements of § 173.199. For example, many of the reported incidents appear to have resulted from improper closure of either the primary receptacle or the secondary packaging. Other packagings involved in reported incidents did not include absorbent or cushioning material. Our analysis does not show a trend in package failures that would indicate a problem with the adequacy of the packaging currently authorized by the HMR for the transportation of diagnostic specimens and proposed in this NPRM to be authorized for the transportation of Category B infectious substances. Rather, our analysis indicates that some shippers do not understand the regulatory requirements in § 173.199. To address this problem, in this NPRM we propose to require the manufacturer and subsequent distributors of packagings authorized for the transportation of Category B infectious substances under § 173.199 to provide clear instructions on filling, preparing, and closing the packaging to the consignor or the person who prepares the package for transportation.

In this regard, we note that a number of testing laboratories provide the packaging for patients or health care professionals to use in transporting patient samples for testing and diagnosis. Under this NPRM, the proposed requirement to provide clear filling and closure instructions would apply to such testing laboratories as ''subsequent distributors'' of the packaging. It is also important to note that selection of an appropriate packaging for the transportation of a hazardous material is a regulated pre-transportation function under the HMR. Thus, the entity providing the packaging could be subject to enforcement action as an offeror of the infectious substance if the packaging does not comply with applicable HMR requirements.

We have prepared a guidance document addressing the current requirements in the HMR for proper classification and packaging for diagnostic specimens which is available from our Office of Hazardous Materials Initiatives and Training at (202) 366–4900 or online at *http://hazmat.dot.gov/InfectSubstances.pdf.*

IX. Section-by-Section Review

This section-by-section review summarizes the proposed changes believed to be most important, and requests additional comments in some sections.

Part 171

Section 171.8. In § 171.8, we propose to remove the definition for Risk Group.

Part 172

Section 172.101. In the Hazardous Materials Table, we are proposing several revisions. Most importantly, we are removing the current entry for ''Diagnostic Specimens'' for consistency with amendments expected to be adopted for the 14th Revised Edition of the UN Recommendations. We are adding an entry for ''Biological substance, Category B.'' This entry will apply to shipments of Category B infectious substances, which must be classed as Division 6.2, described as a ''Biological substances, Category B,'' and assigned to UN 3373.

In addition, we propose to revise the entries for ''Infectious substances, affecting animals'' and ''Infectious substances, affecting humans'' to delete Special Provision A81 (see discussion below). Further, for consistency with the UN Recommendations, we propose to revise the two entries for toxins to include the phrase ''extracted from living sources.''

Section 172.102. We are proposing to remove Special Provision A81, which permits the quantity limits currently specified in the HMT for air shipments to be exceeded for shipments of body fluids packaged in accordance with § 173.196. This special provision is no longer necessary because of the changes we propose applicable to shipments of Category B infectious substances. We propose to include quantity limits for air transportation in § 173.199.

Section 172.200. Consistent with requirements in the ICAO Technical Instructions, in § 172.200 we are proposing to clarify that the shipping paper requirements do not apply to Category B infectious substances prepared in accordance with § 173.199 of the HMR. This proposal is consistent with the requirements adopted for the UN Recommendations, which except Category B infectious substances from the shipping paper requirements of Part 172.

Section 172.203. In paragraph (k) of § 172.203, we propose to authorize a shipping paper that accompanies a shipment of a suspected Category A infectious substance to include the words ''suspected Category A infectious substance'' in parentheses as an alternative to a technical name that describes the pathogen(s) it contains when the infectious substance is not known. Thus, the shipping description for a suspected Category A infectious substance affecting humans would read, ''Infectious substances, affecting humans (suspected Category A infectious substance), 6.2, UN 2814''. For known Category A pathogens, we propose that the technical name of the pathogen must be indicated.

Section 172.301. Consistent with the UN Recommendations, in paragraph (b)

of § 172.301, we propose that no technical names are to be marked on the outer packaging of Division 6.2 materials.

Section 172.800. We propose to require persons who offer for transportation or transport select agents and toxins regulated by USDA under 9 CFR Part 121 to develop and implement security plans in accordance with requirements in Subpart I of part 172 of the HMR.

Part 173

Section 173.6. Our August 14, 2002 final rule added Division 6.2 materials to the hazardous materials that may be transported as materials of trade (MOTS). The final rule prohibited Risk Group 4 infectious substances from being transported as MOTS. In this NPRM, we propose to modify § 173.6 to prohibit Category A infectious substances and suspected Category A infectious substances, rather than Risk Group 4 infectious substances, from being transported as MOTS for consistency with the definition and classification criteria for infectious substances adopted for the UN Recommendations. In addition, we propose to modify the packaging requirements for MOTS shipments of Division 6.2 materials. The August 14, 2002 final rule established capacity limitations for MOTS packagings of Division 6.2 materials. In this NPRM, for consistency with international standards, we propose to limit the amount of material each packaging may contain rather than the capacities of the packagings used. Finally, we propose to add a requirement that sharps containers must be securely closed to prevent leaks or punctures. As indicated above, we are concerned that the closures currently being used for sharps containers may not adequately assure that no contents will be released during transportation.

Section 173.24a. We propose to modify paragraph (c) in § 173.24a to prohibit a package containing inner packagings of Division 6.2 materials from containing any other hazardous materials except for dry ice, liquid nitrogen, or other material used to preserve or stabilize the infectious substance. Hazardous materials most commonly used to preserve or stabilize an infectious substance include methanol, isopropyl alcohol, boric acid, formaldehyde, formalin, and sodium borate. This proposal is consistent with a provision adopted for the 2005–2006 edition of the ICAO Technical Instructions and by the UN Transport of Dangerous Goods Subcommittee for the 14th Revised Edition of the UN Recommendations. The packaging requirements proposed for Division 6.2 materials, which include triple packaging and absorbent material, are comparable to the packaging permitted for transporting hazardous materials in accordance with the small quantity exceptions in § 173.4 and should minimize the risk of a release in transportation. Therefore, in this NPRM, we propose that when a hazardous preservative, such as a Class 3 or Class 8 material in Packing Groups II or III, is included in the inner packaging with the material, the preservative would not be subject to HMR requirements provided the amount in the inner packaging does not exceed 30 mL for a liquid or 30 g for a solid. The maximum quantity in an outer package, including a hazardous material used to preserve or stabilize a sample, would not be permitted to exceed 4 L or 4 kg. Note that this exception applies only to materials in Packing Groups II or III; PG I materials are not authorized. Note also that, for amounts in excess of 30 mL or 30 g per inner packaging, hazardous preservative materials are regulated under the HMR and must be transported in accordance with requirements applicable to their specific classification and characteristics. We request comments as to whether volumes over 30 mL should be excepted and why, and whether the provision should be expanded to allow Packing Group I materials.

Section 173.134. We propose a number of revisions to § 173.134 for consistency with definitions and provisions adopted for the UN Recommendations, as follows:

(1) We propose to modify the definition for a Division 6.2 material. The proposed definition replaces the Risk Group ranking system with the two-tiered Category A and Category B system adopted by the UN. The proposed definition includes a requirement for a Division 6.2 material to be assigned an appropriate identification number: UN 2814 for Category A infectious substances affecting humans or both humans and animals; UN 2900 for Category A infectious substances affecting animals only; UN 3373 for Category B infectious substances; and UN 3291 for Regulated medical waste.

(2) We propose to modify the definition for ''biological product'' to replace the Risk Group ranking references with references to Category A and Category B infectious substances. We are not proposing to adopt the definition for ''biological product'' exactly as that term is defined in the UN Recommendations. The new definition does not differ substantively from the current definition in the HMR; moreover, the current definition in the HMR, as modified in this NPRM, is consistent with the definition used by FDA and other Federal agencies.

(3) We propose to replace the existing definition of ''cultures and stocks'' with a definition for ''cultures'' that is consistent with the definition for ''cultures'' adopted in the UN for the 14th Revised Edition of the UN Recommendations. Cultures are the result of a process by which pathogens are intentionally propagated by use of ideal conditions, including temperature, environment, and nutrient-based propagation media. The definition proposed in this NPRM refers to cultures prepared for the intentional generation of pathogens and does not include patient specimens intended for diagnostic or clinical purposes.

(4) We are proposing a new definition for ''patient specimen.'' As proposed in this NPRM, ''patient specimen'' means human or animal materials that are collected directly from humans or animals and that are transported for research, diagnosis, investigational activities, or disease treatment or prevention. Examples include excreta, secreta, blood and its components, tissue and tissue swabs, and body parts.

(5) We propose to modify the definition for ''regulated medical waste'' to incorporate Category A and Category B infectious substances. RMW containing a Category A infectious substance must be classed as Division 6.2, described as an infectious substance, and assigned to UN 2814 or UN 2900, as appropriate. RMW containing Category B infectious substances is assigned to UN 3291.

(6) We propose to modify the listed exceptions in paragraph (b) of § 173.134 for consistency with the UN Recommendations. Most of the exceptions are unchanged. However, we are adding an exception for a material that has a low probability of containing an infectious substance or where the concentration of the infectious substance is at a level naturally occurring in the environment that will not cause disease when exposure occurs. Examples include foodstuffs and certain environmental samples. The new provision referring to environmental samples would replace the exception for these materials in current § 173.134(b)(13). In addition, we are proposing to add an exception for dried blood spots and for specimens used to detect fecal occult blood. These are specimens that are routinely collected from healthy patients for routine testing and screening (*e.g.*, DNA

analysis, forensic studies, immunologic studies, cancer screening, and nutritional evaluations of infants, children, and adults). The specimen is placed on paper, allowed to saturate the paper, and then dried completely. The specimens pose an extremely minimal risk of infection, and may be rendered unusable if placed in packaging that retains moisture or heat to the sample. More than 100 million specimens have been safely transported by routine mail over the last 30 years. Health professionals recommend that these materials should be transported in a double-envelope system that forms a double-layer protective barrier (*i.e.*, inner and outer-sealed high quality, air-permeable paper envelope) or an attached heavy paper fold-over flap as the inner container placed into a secondary high-quality paper envelope.

In addition, in this NPRM we are proposing to except from regulation under the HMR a human or animal sample transported for routine testing that is not related to diagnosis of an infectious disease and for which there is no reason to suspect that the sample is infectious. Routine screening tests include: (1) Blood or urine tests that a doctor may order as part of a routine medical examination to monitor cholesterol levels, blood glucose levels, hormone levels, or prostate specific antibodies (PSA); (2) blood or urine tests to monitor liver or kidney functions for the millions of people who are not known to have a non-infectious disease, such as multiple sclerosis, and who are following a particular drug therapy regime; (3) blood or urine tests conducted for insurance or employment purposes and/or intended to determine the presence of alcohol or drugs; (4) DNA tests; and (5) pregnancy tests. Tests for diagnoses other than for the presence of pathogens include biopsies to detect cancer and antibody titre testing. This exception is consistent with exeptions adopted in the UN Recommendations for substances that are unlikely to cause disease in humans or animals and substances for which there is a low probability that infectious substances are present.

(7) We propose to revise the exceptions in paragraph (c) applicable to the transportation of regulated medical waste. We propose to add a requirement that sharps containers shipped in accordance with this exception must be securely closed to prevent leaks or punctures. We are concerned that the closures currently being used for sharps containers may not adequately assure that no contents will be released during transportation. In addition, we propose to modify paragraph (c)(2) to revise the current reference to Risk Group 2 or 3 infectious substances to Category B infectious substances.

Section 173.196. We propose to modify the Division 6.2 material packaging requirements in § 173.196 for consistency with the UN Recommendations. Generally, the proposed revisions are editorial and do not change current packaging requirements. We are proposing to add a requirement for outer packagings to be rigid. Note that the packaging requirements in § 173.196 apply to shipments of Category A infectious substances only. In this NPRM, we propose that Category B infectious substances will be transported in accordance with the provisions in § 173.199.

Section 173.197. We propose to modify the RMW packaging requirements in § 173.197 to incorporate Category A and Category B infectious substances. The proposed revisions do not substantively change the current packaging requirements for non-bulk or bulk shipments of RMW.

We propose to revise § 173.197(b) for clarification by correcting in the first sentence, ''except as otherwise provided in § 173.134 of this subpart'' to read ''except as authorized by § 173.134(d)(1)(ii).'' In addition, in current paragraph (b) non-bulk RMW packaging is currently described as a DOT specification packaging meeting the requirements of Part 178 at the PG II performance level. We are proposing to revise the phrase ''DOT specification'' to read ''UN standard'' because non-bulk PG II refers to packagings in Part 178, Subpart L, conforming to a UN standard. We propose in paragraph (d)(1)(iv) to not permit untreated concentrated stock cultures of a Category A infectious substance in a wheeled Cart or BOP.

In § 173.197(d)(2)(iii), the reference to the drop test requirement is not correct. It should read ''Each Cart must be capable of meeting the requirements of § 178.810 (drop test) at the Packing Group II performance level.''

In § 173.197(e)(3), in the introductory paragraph, we are proposing to revise the wording ''the performance tests in § 178.601'' to read ''the performance tests in Part 178, Subpart M''. There are no performance tests in § 178.601. This revision would make § 173.197(e)(3) consistent with § 173.197(b). Finally, we propose to add a requirement that sharps containers must be securely closed to prevent leaks or punctures. We are concerned that the closures currently being used for sharps containers may not adequately ensure that no contents will be released during transportation.

Section 173.199. We propose to modify this section for consistency with the UN Recommendations and ICAO Technical Instructions. As proposed in this NPRM, the provisions of § 173.199 will apply to shipments of Category B infectious substances and used health care products. The packaging requirements proposed are substantially the same as the current requirements for shipping diagnostic specimens, except that we are proposing that the outer packaging must be rigid. The completed packaging must be capable of passing a drop test at a height of 1.2 meters. We are proposing pass/fail criteria for the drop test—there must be no leakage from the primary receptacle, and the primary receptacle must remain protected by absorbent material, when required, in the secondary packaging. In addition, we propose to require the use of absorbent materials for solids that may become liquid during transportation.

Consistent with amendments adopted for the UN Recommendations, we propose to remove the current capacity limitations for shipment of Category B infectious substances, except for Category B infectious substances transported by air. For air shipments of these materials, we are proposing to modify the current limitations on capacity consistent with the amendments adopted in the 2005–2006 ICAO Technical Instructions. For liquids, we propose to increase the amount of material permitted in each inner packaging from 500 mL (16.9 ounces) to 1 L (34 ounces); the limitation on the total amount of material that is permitted in the outer packaging remains 4 L (1 gallon). For solids, we propose to delete the limitation on the amount of material permitted in each inner packaging; again, the limitation on the total amount of material permitted in the outer packaging remains 4 kg (8.8 pounds). In addition, we propose to require at least one surface of the outer packaging to have a minimum dimension of 100 mm by 100 mm (3.9 inches).

Consistent with provisions proposed to be adopted for the 14th Edition of the UN Recommendations, we propose to require a package containing a Category B infectious substance and prepared in accordance with § 173.199 to be marked with the identification number ''UN 3373'' in a square-on-point configuration and with the proper shipping name ''Biological substances, Category B.'' Each side of the square-on-point mark must be at least 50 mm in length, and the proper shipping name

''Biological substances, Category B'' must be in letters at least 6 mm high. We are also proposing to require the proper shipping name, UN number, and the name, address, and telephone number of a person knowledgeable about the shipment to be included on a written document, such as an air waybill or bill of lading, or on the outer packaging. The knowledgeable person should be able to provide information about how to respond to emergencies or releases involving the package and appropriate first aid and treatment. Finally, we propose to permit small amounts of hazardous materials in Packing Groups II or III, not to exceed 30 mL (1 ounce) or 30 g (1 ounce) in each inner packaging, to be used to preserve or stabilize the material. Such preservatives would not be subject to HMR requirements.

Category B infectious substances prepared in accordance with § 173.199 are excepted from all other HMR requirements except for incident reporting and the requirements in Part 175 of the HMR that prohibit a hazardous material subject to the HMR requirements from being transported in the cabin of a passenger aircraft or the flight deck of any aircraft.

Part 175

Section 175.630. We are proposing to add a new paragraph (c) to this section to require air carriers to inspect packages containing Division 6.2 materials for leakage when they are unloaded. If evidence of leakage is found, the cargo compartment must be disinfected.

X. Rulemaking Analysis and Notices

A. Statutory/Legal Authority for This Rulemaking

This NPRM is published under the following statutory authorities:

1. 49 U.S.C. 5103(b) authorizes the Secretary of Transportation to prescribe regulations for the safe transportation, including security, of hazardous material in intrastate, interstate, and foreign commerce. This NPRM proposes regulations to enhance the safe and secure transportation of infectious substances in intrastate, interstate, and foreign commerce. To this end, as discussed in detail earlier in this preamble, the NPRM proposes to revise current HMR requirements applicable to infectious substances for classification, packaging, and hazard communication and for offerors and transporters of certain infectious substances to develop and implement security plans.

2. 49 U.S.C. 5120(b) authorizes the Secretary of Transportation to ensure that, to the extent practicable, regulations governing the transportation of hazardous materials in commerce are consistent with standards adopted by international authorities. This NPRM proposes regulations applicable to the transportation of infectious substances in commerce that are consistent with international standards applicable to such transportation. To this end, as discussed in detail earlier in this preamble, the NPRM proposes to harmonize current HMR requirements for infectious substances with the standards adopted for the transportation of infectious substances in the UN Recommendations, the 2005–2006 ICAO Technical Instructions, and Amendment 32 to the IMDG Code. The continually increasing amount of hazardous materials transported in international commerce warrants the harmonization of domestic and international requirements to the greatest extent possible. Harmonization serves to facilitate international transportation; at the same time, harmonization ensures the safety of people, property, and the environment by reducing the potential for confusion and misunderstanding that could result if shippers and transporters were required to comply with two or more conflicting sets of regulatory requirements. While the intent of this rulelmaking is to align the HMR with international standards, we review and consider each amendment on its own merit based on its overall impact on transportation safety and the economic implications associated with its adoption into the HMR. Our goal is to harmonize without sacrificing the current HMR level of safety and without imposing undue burdens on the regulated public. Thus, as discussed in detail earlier in this preamble, there are several instances where we elected not to propose adoption of a specific provision of the UN Recommendations or the ICAO Technical Instructions; further, we propose to maintain a number of current exceptions for domestic transportation that should minimize the compliance burden on the regulated community.

B. Executive Order 12866 and DOT Regulatory Policies and Procedures

This NPRM is a significant regulatory action under section 3(f) of Executive Order 12866 and, therefore, was reviewed by the Office of Management and Budget. This proposed rule is also considered significant under the Regulatory Policies and Procedures of the Department of Transportation (44 FR 11034). Benefits resulting from the adoption of the amendments in this NPRM include reduced transportation costs for shipments of certain infectious substances and enhanced transportation safety and efficiency resulting from consistent domestic and international transportation requirements. The NPRM would result in new costs of compliance related to the development and implementation of transportation security plans for persons who ship USDA-regulated select agents and toxins. A regulatory evaluation for this NPRM is in the public docket for this rulemaking.

This NPRM proposes to relax requirements for transporting Category B infectious substances. Currently, many of these infectious substances must be shipped in appropriately marked and labeled UN specification packagings and accompanied by shipping papers and emergency response information; these infectious substances are also subject to incident reporting requirements. Under this proposal, Category B infectious substances could be shipped in non-specification packagings, marked with the appropriate UN number. However, they would be excepted from labeling and shipping documentation requirements. Category B infectious substances would also be excepted from incident reporting requirements, except for shipments by aircraft. Thus, the proposals in this NPRM would reduce transportation costs for many infectious substances and facilitate their rapid and efficient transportation, which is critical to public health.

This NPRM proposes to harmonize the requirements in the HMR for transporting infectious substances with international standards in the UN Recommendations, the ICAO Technical Instructions, and the International Maritime Dangerous Goods Code. Harmonization of requirements in the HMR with international standards will allow us to avoid inconsistencies between the regulations, thereby facilitating efficient transportation of infectious substances across national or international borders. More importantly, harmonized regulations reduce the potential for misunderstanding and confusion and, thus, enhance safety.

C. Executive Order 13132

This proposed rule has been analyzed in accordance with the principles and criteria contained in Executive Order 13132 (''Federalism''). This proposed rule would preempt State, local, and Indian tribe requirements but does not propose any regulation that has substantial direct effects on the States, the relationship between the national government and the States, or the distribution of power and

responsibilities among the various levels of government. Therefore, the consultation and funding requirements of Executive Order 13132 do not apply.

The Federal hazardous materials transportation law, 49 U.S.C. 5101–5127, contains an express preemption provision (49 U.S.C. 5125(b)) that preempts State, local, and Indian tribe requirements on certain covered subjects. Covered subjects are:

(1) The designation, description, and classification of hazardous materials;

(2) The packing, repacking, handling, labeling, marking, and placarding of hazardous materials;

(3) The preparation, execution, and use of shipping documents related to hazardous materials and requirements related to the number, contents, and placement of those documents;

(4) The written notification, recording, and reporting of the unintentional release in transportation of hazardous material; or

(5) The design, manufacture, fabrication, marking, maintenance, recondition, repair, or testing of a packaging or container represented, marked, certified, or sold as qualified for use in transporting hazardous material.

This proposed rule addresses covered subject items (1), (2), (3), (4), and (5) described above and would preempt State, local, and Indian tribe requirements not meeting the ''substantively the same'' standard. This proposed rule is necessary to harmonize domestic regulations for the transportation of infectious substances with international standards.

Federal hazardous materials transportation law provides at § 5125(b)(2) that, if DOT issues a regulation concerning any of the covered subjects, DOT must determine and publish in the **Federal Register** the effective date of Federal preemption. The effective date may not be earlier than the 90th day following the date of issuance of the final rule and not later than two years after the date of issuance. PHMSA proposes that the effective date of Federal preemption will be 90 days from publication of a final rule in this matter in the **Federal Register**.

D. Executive Order 13175

This proposed rule has been analyzed in accordance with the principles and criteria contained in Executive Order 13175 (''Consultation and Coordination with Indian Tribal Governments''). Because this proposed rule does not have tribal implications and does not impose direct compliance costs, the funding and consultation requirements of Executive Order 13175 do not apply.

E. Regulatory Flexibility Act, Executive Order 13272, and DOT Procedures and Policies

The Regulatory Flexibility Act (5 U.S.C. 601–611) requires each agency to analyze proposed regulations and assess their impact on small businesses and other small entities to determine whether the proposed rule is expected to have a significant impact on a substantial number of small entities. A regulatory evaluation for this NPRM, which includes a detailed small business impact analysis, is in the public docket for this rulemaking.

Businesses likely to be affected by the proposals in this NPRM are the more than 441,000 establishments that comprise North American Industrial Classification System Major Groups 32, 48, 54, and 62, including offices and clinics of doctors of medicine, dentists, doctors of osteopathy, chiropractors, optometrists, podiatrists, and health practitioners; nursing and personal care facilities; hospitals; medical and dental laboratories; and patients. For purposes of the small business impact analysis, the definition of ''small business'' has the same meaning as under the Small Business Act. The majority of the businesses likely to be affected by the proposals in this NPRM are small businesses (from 68% of general medical and surgical hospitals to nearly 100% of doctors' offices and research laboratories).

For the most part, affected businesses would incur no increased costs to comply with the provisions of this NPRM; indeed, if adopted, the provisions of this NPRM would reduce overall transportation costs for most of these entities. Manufacturers and distributors of packages intended for the transportation of infectious substances will incur costs associated with retaining copies of filling and closure instructions for such packages; we estimate that the cost per company will be about $750/year. In addition, air carriers would incur increased costs associated with new cargo inspection requirements; we estimate that these costs would amount to $1.34 per package of infectious substances transported. Finally, the NRPM would impost new costs on the regulated industry for shipments of select agents and toxins regulated by USDA; we estimate that these costs would amount to $1,125 per company to develop a security plan and a subsequent annual cost of $225 per entity to update and maintain the security plan. The annual costs attributed to the proposals in this NPRM are minimal, especially when compared to the $300 billion in receipts reported by the health services industry. We believe none of those costs will be disproportionately borne by any of the identified groups of small businesses.

Benefits resulting from the adoption of the amendments in this NPRM include reduced transportation costs for shipments of certain infectious substances and enhanced transportation safety, security, and efficiency resulting from consistent domestic and international transportation requirements. For example, companies that ship infectious substances could expect to experience an average cost savings of $77 per shipment as a result of new packaging requirements for Category B infectious substances and $1.90 per shipment as a result of revised hazard communication requirements for Category B infectious substances. In addition, the NPRM would result in enhanced security for the transportation of select agents. Finally, the NPRM would remove inconsistencies between the HMR and international transportation standards applicable to the transportation of infectious substances, thereby facilitating efficient transportation across national and international borders and reducing the potential for misunderstanding and confusion in applying the regulatory requirements.

Based on the above analysis, PHMSA certifies that while this proposed rule will impact a significant number of small entities it will not have a significant economic impact on a substantial number of small entities.

This proposed rule has been developed in accordance with Executive Order 13272 (''Proper Consideration of Small Entities in Agency Rulemaking'') and DOT's procedures and policies to promote compliance with the Regulatory Flexibility Act to ensure that potential impacts of draft rules on small entities are properly considered.

F. Unfunded Mandates Reform Act of 1995

This proposed rule would not impose unfunded mandates under the Unfunded Mandates Reform Act of 1995. It would not, if adopted, result in costs of $120.7 million or more, in the aggregate, to any of the following: State, local, or Native American tribal governments, or the private sector.

G. Paperwork Reduction Act

This proposed rule does not impose any new information collection requirements.

H. Regulation Identifier Number (RIN)

A regulation identifier number (RIN) is assigned to each regulatory action

listed in the Unified Agenda of Federal Regulations. The Regulatory Information Service Center publishes the Unified Agenda in April and October of each year. The RIN number contained in the heading of this document may be used to cross-reference this action with the Unified Agenda.

I. Environmental Assessment

The National Environmental Policy Act of 1969 (NEPA), as amended (42 U.S.C. 4321–4347), requires Federal agencies to consider the consequences of major federal actions and prepare a detailed statement on actions significantly affecting the quality of the human environment. There are no significant environmental impacts associated with this proposed rule. PHMSA proposes changes to certain HMR requirements for the transportation of infectious substances in order to promote safer transportation practices, facilitate international commerce, and make these requirements compatible with new international standards regarding the transportation of infectious substances.

J. Privacy Act

Anyone is able to search the electronic form for all comments received into any of our dockets by the name of the individual submitting the comments (or signing the comment, if submitted on behalf of an association, business, labor union, etc.). You may review DOT's complete Privacy Act Statement in the **Federal Register** published on April 11, 2000 (Volume 65, Number 70; Pages 19477–78) or you may visit *http://dms.dot.gov.*

List of Subjects

49 CFR Part 171

Exports, Hazardous materials transportation, Hazardous waste, Imports, Incorporation by reference, Reporting and recordkeeping requirements.

49 CFR Part 172

Education, Hazardous materials transportation, Hazardous waste, Incorporation by reference, Labeling, Markings, Packaging and containers, Reporting and recordkeeping requirements.

49 CFR Part 173

Hazardous materials transportation, Incorporation by reference, Packaging and containers, Radioactive materials, Reporting and Recordkeeping Requirements, Uranium.

49 CFR Part 175

Air carriers, Hazardous materials transportation, Incorporation by reference, Radioactive materials, Reporting and recordkeeping requirements.

In consideration of the foregoing, we propose to amend 49 CFR parts 171, 172, 173, and 175 as follows:

PART 171—GENERAL INFORMATION, REGULATIONS, AND DEFINITION

1. The authority citation for part 171 continues to read as follows:

Authority: 49 U.S.C. 5101–5127, 44701; 49 CFR 1.45 and 1.53; Pub. L. 101–410 section 4 (28 U.S.C. 2461 note); Pub. L. 104–134 section 31001.

§ 171.8 [Amended]

2. In § 171.8, the definition for ''Risk Group'' is removed.

PART 172—HAZARDOUS MATERIALS TABLE, SPECIAL PROVISIONS, HAZARDOUS MATERIALS COMMUNICATIONS, EMERGENCY RESPONSE INFORMATION, AND TRAINING REQUIREMENTS

3. The authority citation for part 172 continues to read as follows:

Authority: 49 U.S.C. 5101–5127; 49 CFR 1.53.

4. In § 172.101, in the Hazardous Materials Table, the following changes are made:

a. The entries ''Diagnostic specimen''; ''Toxins, from living sources, liquid, n.o.s.''; and ''Toxins, from living sources, solid, n.o.s.'' are removed.

b. The entries ''Biological substance, Category B''; ''Toxins, extracted from living sources, liquid, n.o.s.''; and ''Toxins, extracted from living sources, solid, n.o.s.'' are added in appropriate alphabetic order.

c. The entries ''Infectious substances, affecting animals only''; ''Infectious substances, affecting humans''; and ''Regulated medical waste, n.o.s.'' are revised.

The additions and revisions read as follows:

§ 172.101 Purpose and use of hazardous materials table.

* * * * *

Symbols	Hazardous materials descriptions and proper shipping names	Hazard class or division	Identification numbers	PG	Label codes	Special provisions	Packaging (§ 173.* * *) (8)			Quantity limitations (9)		Vessel stowage (10)	
							Exceptions	Non-bulk	Bulk	Passenger aircraft/rail	Cargo aircraft only	Location	Other
(1)	(2)	(3)	(4)	(5)	(6)	(7)	(8A)	(8B)	(8C)	(9A)	(9B)	(10A)	(10B)
	*		*	*		*	*		*	*			
	Biological substance, Category B	6.2	UN3373			A82	134	199	None	4L or 4 kg	4 L or 4 kg	A	40
	*		*	*		*	*		*	*			
G	Infectious substances, affecting animals only.	6.2	UN2900		6.2	A82	134	196	None	50 mL or 50 g.	4 L or 4 kg	B	40
G	Infectious substances, affecting humans.	6.2	UN 2814		6.2	A82	134	196	None	50 mL or 50 kg.	4 L or 4 kg	B	40
	*		*	*		*	*		*	*			
G	Regulated medical waste, n.o.s	6.2	UN3291	II	6.2	A13	134	197	197	No limit	No limit	B	40
	*		*	*		*	*		*	*			
G	Toxins, extracted from living sources, liquid, n.o.s.	6.1	UN3172	I	6.1	141	None	201	243	1 L	30 L	B.	
				II			None	202	243	5 L	60 L	B.	
				III			153	203	241	60 L	220 L	A.	
G	Toxins, extracted from living sources, solid, n.o.s.	6.1	UN3462	I	6.1	141, IB8	None	211	243	5 kg	50 kg	B.	
				II			None	212	243	25 kg	100 kg	B.	
				III			153	213	241	100 kg	200 kg	A.	
	*		*	*		*	*		*	*			

* * * * *

§ 172.102 [Amended]

5. In § 172.102, in paragraph (c)(2), Special Provision A81 is removed.

6. In § 172.200, paragraph (b)(4) is added to read as follows:

§ 172.200 Applicability.

* * * * *

(b) * * *

(4) Category B infectious substances prepared in accordance with § 173.199.

* * * * *

7. In § 172.203, in paragraph (k) introductory text a sentence is added after the last sentence to read as follows:

§ 172.203 Additional description requirements.

* * * * *

(k) * * * A material classed as Division 6.2 and assigned identification UN 2914 or 2900 because it is suspected to contain an unknown Category A infectious substance must have the words ''suspected Category A infectious substance'' entered in parentheses in place of the technical name as part of the proper shipping description.

* * * * *

8. In § 172.301, paragraph (b) is revised to read as follows.

§ 172.301 General marking requirements for non-bulk packagings.

(b) *Technical names.* In addition to the marking required by paragraph (a) of this section, each non-bulk packaging containing a hazardous material subject to the provisions of § 172.203(k) of this part, except for a Division 6.2 material, must be marked with the technical name in parentheses in association with the proper shipping name in accordance with the requirements and exceptions specified for display of technical descriptions on shipping papers in § 172.203(k) of this part. A technical name should not be marked on the outer package of a Division 6.2 material.

* * * * *

9. In § 172.800, paragraph (b)(6) is revised to read as follows:

§ 172.800 Purpose and Applicability.

(b) * * *

(6) A select agent or toxin regulated by the Centers for Disease Control and Prevention under 42 CFR part 73 or, by [six months after effective date of final rule], a select agent or toxin regulated by the United States Department of Agriculture under 9 CFR part 121; or

* * * * *

PART 173—SHIPPERS—GENERAL REQUIREMENTS FOR SHIPMENTS AND PACKAGINGS

9a. The authority citation for part 173 continues to read as follows:

Authority: 49 U.S.C. 5101–5127, 44701; 49 CFR 1.45, 1.53.

10. In § 173.6, paragraph (a)(4) is revised to read as follows:

§ 173.6 Materials of trade exceptions.

(a) * * *

(4) A Division 6.2 material, other than a Category A infectious substance, that is contained in human or animal samples (including, but not limited to, secreta, excreta, blood and its components, tissue and tissue fluids, and body parts) being transported for research, diagnosis, investigational activities, or disease treatment or prevention, or is a biological product or regulated medical waste. The material must be contained in a combination packaging. For liquids, the inner packaging must be leakproof, and the outer packaging must contain sufficient absorbent material to absorb the entire contents of the inner packaging. For sharps, the inner packaging (sharps container) must be constructed of a rigid material resistant to punctures and securely closed to prevent leaks or punctures, and the outer packaging must be securely closed to prevent leaks or punctures. For all Division 6.2 materials, the outer packaging must be a strong, tight packaging securely closed and secured against movement, including relative motion between packages, within the vehicle on which it is being transported.

(i) For other than a regulated medical waste, the amount of Division 6.2 material in a combination packaging must conform to the following limitations:

(A) One or more inner packagings, each of which may not contain more than 0.5 kg (1.1 lbs) or 0.5 L (17 ounces), and an outer packaging containing not more than 4 kg (8.8 lbs) or 4 L (1 gallon); or

(B) A single inner packaging containing not more than 16 kg (35.2 lbs) or 16 L (4.2 gallons) in a single outer packaging.

(ii) For a regulated medical waste, a combination packaging must consist of one or more inner packagings, each of which may not contain more than 4 kg (8.8 lbs) or 4 L (1 gallon), and an outer packaging containing not more than 16 kg (35.2 lbs) or 16 L (4.2 gallons).

* * * * *

11. In § 173.24a, paragraph (c)(2) is revised to read as follows:

§ 173.24a Additional general requirements for non-bulk packagings and packages.

* * * * *

(c) * * *

(2) A packaging containing inner packagings of Division 6.2 materials may not contain other hazardous materials except—

(i) Refrigerants, such as dry ice or liquid nitrogen, as authorized under the HMR;

(ii) Anticoagulants used to stabilize blood or plasma; or

(iii) Small quantities of Class 3, Class 8, Class 9, or other materials in Packing Groups II or III used to stabilize or prevent degradation of the sample, provided the quantity of such materials does not exceed 30 mL (1 ounce) or 30 g (1 ounce) in each inner packaging. Such materials are not subject to the requirements of this subchapter.

* * * * *

12. In § 173.134, paragraph (a) introductory text and, (a)(1) through (a)(5) are revised; paragraph (a)(6) is removed; paragraphs (a)(7), (a)(8), and (a)(9) are redesignated as paragraphs (a)(6), (a)(7), and (a)(8) respectively, and paragraphs (b), (c)(1)(ii), and (c)(2) are revised to read as follows:

§ 173.134 Class 6, Division 6.2—Definitions and exceptions.

(a) *Definitions and classification criteria.* For the purposes of this subchapter, the following definitions and classification criteria apply to Division 6.2 materials.

(1) *Division 6.2 (Infectious substance)* means a material known or reasonably expected to contain a pathogen. A pathogen is a microorganism (including bacteria, viruses, rickettsiae, parasites, fungi) or other agent, such as a proteinaceous infectious particle (prion), that can cause disease in humans or animals. An infectious substance must be assigned the identification number UN 2814, UN 2900, UN 3373, or UN 3291 as appropriate, and must be assigned to one of the following categories:

(i) *Category A:* An infectious substance in a form that is capable of causing permanent disability or life-threatening or fatal disease in otherwise healthy humans or animals when exposure to it occurs. An exposure occurs when an infectious substance is released outside of its protective packaging, resulting in physical contact with humans or animals. A Category A infectious substance must be assigned to UN 2814 or UN 2900, as appropriate. Assignment to UN 2814 or UN 2900 must be based on the known medical history or symptoms of the source patient or animal, endemic local

conditions, or professional judgment concerning the individual circumstances of the source human or animal.

(ii) *Category B:* An infectious substance that is not in a form that is generally capable of causing permanent disability or life-threatening or fatal disease in otherwise healthy humans or animals when exposure to it occurs. This includes Category B infectious substances transported for diagnostic or investigational purposes. A Category B infectious substance must be described as ''Biological substance, Category B'' and assigned identification number UN 3373. This does not include regulated medical waste, which must be assigned UN 3291.

(2) *Biological product* means a virus, therapeutic serum, toxin, antitoxin, vaccine, blood, blood component or derivative, allergenic product, or analogous product, or arsphenamine or derivative of arsphenamine (or any other trivalent arsenic compound) applicable to the prevention, treatment, or cure of a disease or condition of human beings or animals. A *biological product* includes a material manufactured and distributed in accordance with one of the following provisions: 9 CFR part 102 (Licenses for Biological Products); 9 CFR part 103 (Experimental Products, Distribution, and Evaluation of Biological Products Prior to Licensing); 9 CFR part 104 (Permits for Biological Products); 21 CFR part 312 (Investigational New Drug Application); 21 CFR part 314 (Applications for FDA Approval to Market a New Drug); 21 CFR parts 600 to 680 (Biologics); or 21 CFR part 812 (Investigational Device Exemptions). Unless otherwise excepted, a *biological product* known or reasonably expected to contain a pathogen that meets the definition of a Category A or B infectious substance must be assigned the identification number UN 2814, UN 2900, or UN 3373, as appropriate.

(3) *Culture* means an infectious substance containing a pathogen that is intentionally propagated. *Culture* does not include a human or animal patient specimen as defined in paragraph (a)(4) of this section.

(4) *Patient specimen* means human or animal materials that are collected directly from humans or animals and that are transported for research, diagnosis, investigational activities, or disease treatment or prevention. *Patient specimen* includes excreta, secreta, blood and its components, tissue and tissue swabs, body parts, and specimens in transport media (*e.g.*, transwabs, culture media, and blood culture bottles).

(5) *Regulated medical waste* means a waste or reusable material derived from the medical treatment of an animal or human, which includes diagnosis and immunization, or from biomedical research, which includes the production and testing of biological products. *Regulated medical waste* is assigned to UN 3291, except for *regulated medical waste* containing a Category A infectious substance, which must be classed as a Division 6.2 material, described as an infectious substance, and assigned to UN 2814 or UN 2900, as appropriate.

* * * * *

(b) *Exceptions.* The following are not subject to the requirements of this subchapter as Division 6.2 materials:

(1) A material that does not contain an infectious substance or that is unlikely to cause disease in humans or animals.

(2) Non-infectious biological materials from humans, animals, or plants. Examples include non-infectious cells, tissue cultures, blood or plasma from individuals not suspected of having an infectious disease, DNA, RNA or other non-infectious genetic elements.

(3) A material that contains micro-organisms that are non-pathogenic to humans or animals.

(4) A material that contains pathogens that have been neutralized or inactivated such that they no longer pose a health risk.

(5) A material that has a low probability of containing an infectious substance, or where the concentration of the infectious substance is at a level naturally occurring in the environment so it cannot cause disease when exposure to it occurs. Examples of these materials include: foodstuffs; environmental samples, such as water or a sample of dust or mold; and substances that have been treated so that the pathogens have been neutralized or deactivated, such as a material treated by steam sterilization, chemical disinfection, or other appropriate method, so it no longer meets the definition of an infectious substance.

(6) A biological product, including an experimental or investigational product or component of a product, subject to Federal approval, permit, review, or licensing requirements, such as those required by the Food and Drug Administration of the U.S. Department of Health and Human Services or the U.S. Department of Agriculture.

(7) Blood collected for the purpose of blood transfusion or the preparation of blood products; blood products; plasma; plasma derivatives; blood components; tissues or organs intended for use in transplant operations; and human cell, tissues, and cellular and tissue-based products regulated under authority of the Public Health Service Act (42 U.S.C. 264–272) and/or the Food, Drug, and Cosmetic Act (21 U.S.C. 332 *et seq.*).

(8) Blood, blood plasma, and blood components collected for the purpose of blood transfusion or the preparation of blood products and sent for testing as part of the collection process, except where the person collecting the blood has reason to believe it contains an infectious substance, in which case the test sample must be shipped as a Category A or Category B infectious substance in accordance with § 173.196 or § 173.199, as appropriate.

(9) Dried blood spots or specimens for fecal occult blood detection placed on absorbent filter paper or other material.

(10) A Division 6.2 material, other than a Category A infectious substance, that is contained in a patient sample being transported for research, diagnosis, investigational activities, or disease treatment or prevention, or a biological product, when such materials are transported by a private or contract carrier in a motor vehicle used exclusively to transport such materials. Medical or clinical equipment and laboratory products may be transported aboard the same vehicle provided they are properly packaged and secured against exposure or contamination. If the human or animal sample or biological product meets the definition of regulated medical waste in paragraph (a)(4) of this section, it must be offered for transportation and transported in conformance with the appropriate requirements for regulated medical waste.

(11) A human or animal sample (including, but not limited to, secreta, excreta, blood and its components, tissue and tissue fluids, and body parts) being transported for routine testing that is not related to the diagnosis of an infectious disease, such as for drug/alcohol testing, cholesterol testing, blood glucose level testing, prostate specific antibody testing, testing to monitor kidney or liver function, or pregnancy testing, or for tests for diagnosis of non-infectious diseases, such as cancer biopsies, and for which there is a low probability that the sample is infectious.

(12) Laundry or medical equipment conforming to the regulations of the Occupational Safety and Health Administration of the Department of Labor in 29 CFR 1910.1030. This exception includes medical equipment intended for use, cleaning, or refurbishment, such as reusable surgical equipment, or equipment used for testing where the components within

which the equipment is contained essentially function as packaging. This exception does not apply to medical equipment being transported for disposal.

(13) Any waste or recyclable material, other than regulated medical waste, including—

(i) Garbage and trash derived from hotels, motels, and households, including but not limited to single and multiple residences;

(ii) Sanitary waste or sewage;

(iii) Sewage sludge or compost;

(iv) Animal waste generated in animal husbandry or food production; or

(v) Medical waste generated from households and transported in accordance with applicable State, local, or tribal requirements.

(14) Corpses, remains, and anatomical parts intended for interment, cremation, or medical research at a college, hospital, or laboratory.

(15) Forensic material transported on behalf of a U.S. Government, state, local or Indian tribal government agency, except that—

(i) Forensic material known or suspected to contain a Category B infectious substance must be shipped in a packaging conforming to the provisions of § 173.24.

(ii) Forensic material known or suspected to contain a Category A infectious substance or an infectious substance listed as a select agent in 42 CFR Part 73 must be transported in packaging capable of meeting the test standards in § 178.609 of this subchapter. The secondary packaging must be marked with a BIOHAZARD symbol conforming to specifications in 29 CFR 1910.1030(g)(1)(i). An itemized list of contents must be enclosed between the secondary packaging and the outer packaging.

(16) Agricultural products and food as defined in the Federal Food, Drug, and Cosmetics Act (21 U.S.C. 332 *et seq.*).

(c) * * *

(1) * * *

(i) * * *

(ii) The specific packaging requirements of § 173.197, if packaged in a rigid non-bulk packaging conforming to the general packaging requirements of §§ 173.24 and 173.24a and packaging requirements specified in 29 CFR 1910.1030, provided the material does not include a waste concentrated stock culture of an infectious substance. Sharps containers must be securely closed to prevent leaks or punctures.

(2) A waste concentrated stock culture of a Category B infectious substance may be offered for transportation and transported as a regulated medical waste when it is packaged in a rigid non-bulk packaging conforming to the general packaging requirements of §§ 173.24 and 173.24a and packaging requirements specified in 29 CFR 1910.1030 and transported by a private or contract carrier in a vehicle used exclusively to transport regulated medical waste. Medical or clinical equipment and laboratory products may be transported aboard the same vehicle provided they are properly packaged and secured against exposure or contamination.

* * * * *

13. In § 173.196, the section title and paragraphs (a) introductory text, (a)(2), (a)(3), and (b) are revised, to read as follows.

§ 173.196 Category A infectious substances.

(a) *Category A infectious substances packaging.* A packaging for a Division 6.2 material that is a Category A infectious substance must meet the test standards of § 178.609 of this subchapter and must be marked in conformance with § 178.503(f) of this subchapter. A packaging for a Category A infectious substance is a triple packaging consisting of the following components:

* * * * *

(2) A watertight secondary packaging. If multiple fragile primary receptacles are placed in a single secondary packaging, they must be either wrapped individually or separated to prevent contact between them.

(3) A rigid outer packaging of adequate strength for its capacity, mass and intended use. The outer packaging must measure not less than 100 mm (3.9 inches) at its smallest overall external dimension.

* * * * *

(b) *Additional requirements for packaging Category A infectious substances.* Category A infectious substances must be packaged according to the following requirements, depending on the physical state and other characteristics of the material.

(1) *Infectious substances shipped at ambient temperatures or higher.* Primary receptacles must be made of glass, metal, or plastic. Positive means of ensuring a leakproof seal must be provided, such as heat seal, skirted stopper, or metal crimp seal. If screw caps are used, they must be secured by positive means, such as with adhesive tape, paraffin sealing tape, or manufactured locking closure. Lyophilized substances may also be transported in primary receptacles that are flame-sealed with glass ampoules or rubber-stoppered glass vials fitted with metal seals.

(2) *Infectious substances shipped refrigerated or frozen (ice, pre-frozen packs, dry ice).* Ice, dry ice, or other refrigerant must be placed around the secondary packagings or in an overpack with one or more complete packages marked in accordance with § 178.503 of this subchapter. Interior supports must be provided to secure the secondary packagings in the original position after the ice or dry ice has dissipated. If ice is used, the outer packaging or overpack must be leakproof. If dry ice is used, the outer packaging or overpack must permit the release of carbon dioxide gas and otherwise meet the provisions in § 173.217. The primary receptacle and the secondary packaging must maintain their integrity at the temperature of the refrigerant used, as well as the temperatures and pressures of transport by aircraft to which they could be subjected if refrigeration were lost.

(3) *Category A infectious substances shipped in liquid nitrogen.* The primary receptacle and the secondary packaging must maintain their integrity at the temperature of the liquid nitrogen as well as the temperatures and pressures of transport by aircraft to which they could be subjected if refrigeration were lost. Refrigerated liquid nitrogen packagings must be metal vacuum insulated vessels or flasks vented to the atmosphere to prevent any increase in pressure within the packaging. The use of safety relief valves, check valves, frangible discs, or similar devices in the vent lines is prohibited. Fill and discharge openings must be protected against the entry of foreign materials that might cause an increase in the internal pressure. The package orientation markings specified in § 172.312(a) of this subchapter must be marked on the packaging. The packaging must be designed to prevent the release of any refrigerated liquid nitrogen irrespective of the packaging orientation.

* * * * *

14. In § 173.197, paragraphs (a), (b), (d)(1)(iv), (d)(1)(vi), (d)(2)(iii), (d)(3)(vi), (e)(2) and (e)(3) introductory paragraph are revised to read as follows:

§ 173.197 Regulated medical waste.

(a) *General provisions.* Non-bulk packagings, Large Packagings, and non-specification bulk outer packagings used for the transportation of regulated medical waste must be rigid containers meeting the provisions of subpart B of this part.

(b) *Non-bulk packagings.* Except as provided in § 173.134(c)(1)(ii) of this subpart, non-bulk packagings for

regulated medical waste must be UN standard packagings conforming to the requirements of Part 178 of this subchapter at the Packing Group II performance level. A non-bulk packaging used as a sharps container must be puncture-resistant for sharps and sharps with residual fluid as demonstrated by conducting the performance tests in Part 178, subpart M, of this subchapter on packagings containing materials representative of the sharps and fluids (such as sterile sharps) intended to be transported in the packagings. Sharps containers must be securely closed to prevent leaks or punctures.

* * * * *

(d) * * *

(1) * * *

(iv) Untreated concentrated stock cultures of infectious substances containing Category A materials may not be transported in a Cart or BOP.

* * * * *

(vi) Division 6.1 or Class 7 chemotherapeutic waste; untreated concentrated stock cultures of infectious substances containing Category B infectious substances; unabsorbed liquids; and sharps containers may be transported in a Cart or BOP only if packaged in rigid non-bulk packagings conforming to paragraph (a) of this section.

* * * * *

(2) * * *

(iii) Each Cart must be capable of meeting the requirements of § 178.810 (drop test) at the Packing Group II performance level.

* * * * *

(3) * * *

(vi) Division 6.1 or Class 7 chemotherapeutic waste, untreated concentrated stock cultures of infectious substances containing Category B infectious substances, unabsorbed liquids, and sharps may be transported in a BOP only if separated and secured as required in paragraph (d)(3)(v) of this section.

* * * * *

(e) * * *

(2) *Liquids.* Liquid regulated medical waste transported in a Large Packaging, Cart, or BOP must be packaged in a rigid inner packaging conforming to the provisions of subpart B of this part. Liquid materials are not authorized for transportation in inner packagings having a capacity greater than 19 L (5 gallons).

(3) *Sharps.* Sharps transported in a Large Packaging, Cart, or BOP must be packaged in a puncture-resistant inner packaging (sharps container). Each sharps container must be securely closed to prevent leaks or punctures. Each sharps container exceeding 76 L (20 gallons) in volume must be capable of passing the performance tests in Part 178, subpart M, of this subchapter at the Packing Group II performance level. A sharps container may be reused only if it conforms to the following criteria:

* * * * *

15. In § 173.199, the section title and paragraphs (a), (b) introductory text, (b)(1), (b)(2), (b)(5), and (c) are revised, paragraphs (d) and (e) are redesignated (e) and (f), respectively, new paragraph (d) is added, and redesignated paragraphs (e) introductory text and (f) are revised, to read as follows:

§ 173.199 Category B infectious substances and used health care products.

(a) *Category B infectious substances.* Except as provided in this paragraph (a), Category B infectious substances are excepted from all other requirements of this subchapter when offered for transportation or transported in accordance with this section. Category B infectious substances offered for transportation or transported under the provisions of this section are subject to the incident reporting requirements in §§ 171.15 and 171.16 of this subchapter and to the requirements in § 175.85 of this subchapter concerning cargo location. Except as provided in paragraph (a)(9) of this section, a Category B infectious substance meeting the definition of a hazard class other than Division 6.2 must be offered for transportation or transported in accordance with applicable requirements of this subchapter.

(1) A Category B infectious substance must be packaged in a triple packaging consisting of a primary receptacle, a secondary packaging, and a rigid outer packaging.

(2) Primary receptacles must be packed in secondary packaging in such a way that, under normal conditions of transport, they cannot break, be punctured, or leak their contents into the secondary packaging.

(3) Secondary packagings must be secured in rigid outer packagings with suitable cushioning material such that any leakage of the contents will not impair the protective properties of the cushioning material or the outer packaging.

(4) The completed package must be designed, constructed, maintained, filled, its contents limited, and closed so that under conditions normally encountered in transportation, including removal from a pallet or overpack for subsequent handling, there will be no release of hazardous material into the environment. Package effectiveness must not be substantially reduced for minimum and maximum temperatures, changes in humidity and pressure, and shocks, loadings and vibrations normally encountered during transportation. The packaging must be capable of successfully passing the drop test in § 178.603 of this subchapter at a drop height of at least 1.2 meters (3.9 feet). Following the drop test, there must be no leakage from the primary receptacle, which must remain protected by absorbent material, when required, in the secondary packaging. At least one surface of the outer packaging must have a minimum dimension of 100 mm by 100 mm (3.9 inches).

(5) The following mark must be displayed on the outer packaging on a background of contrasting color. The width of the line must be at least 2 mm (0.08 inches) and the letters and numbers must be at least 6 mm (0.24 inches) high. The size of the mark must be such that no side of the diamond is less than 50 mm (1.97 inches) in length. The proper shipping name ''Biological substances, Category B'' must be marked on the outer packaging adjacent to the diamond-shaped mark in letters that are at least 6 mm (0.24 inches) high.

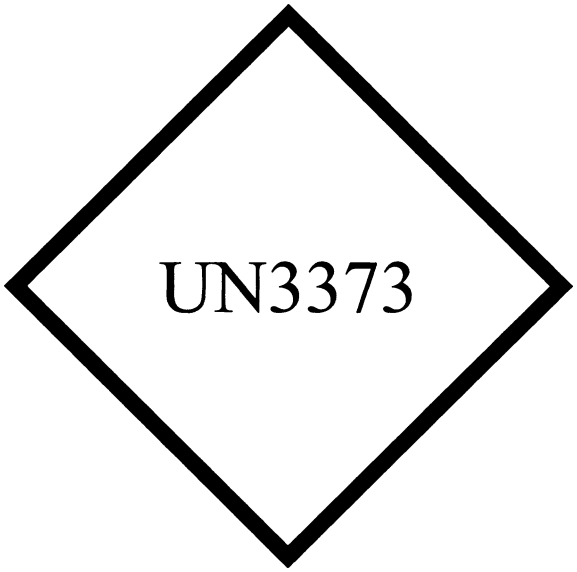

(6) When packages are placed in an overpack, the package markings required by this section must be either clearly visible or reproduced on the outside of the overpack.

(7) The name, address, and telephone number of a person who is either knowledgeable about the material being shipped and has comprehensive emergency response and incident mitigation information for the material, or has immediate access to a person who possesses such knowledge and information, must be included on a written document (such as an air waybill or bill of lading) or on the outer packaging.

(8) For transportation by aircraft, each package or overpack containing a Category B infectious substance must be inspected for leakage when it is unloaded from the aircraft. If evidence of leakage is found, the cargo compartment in which the package or overpack was transported must be disinfected. Disinfection may be by any means that will make the material released ineffective at transmitting disease.

(9) A packaging containing inner packagings of Category B infectious substances may not contain other hazardous materials except—

(i) Refrigerants, such as dry ice or liquid nitrogen, as authorized under paragraph (d) of this section;

(ii) Anticoagulants used to stabilize blood or plasma; or

(iii) Small quantities of Class 3, Class 8, Class 9, or other materials in Packing Groups II and III used to stabilize or prevent degradation of the sample, provided the quantity of such materials does not exceed 30 mL (1 ounce) or 30 g (1 ounce) in each inner packaging. Such materials are not subject to the requirements of this subchapter.

(10) Clear instructions on filling and closing a packaging used to transport a Category B infectious substance must be provided by the packaging manufacturer and subsequent distributors to the consignor or person who prepares the package to enable the package to be correctly prepared for transport. A copy or electronic image of these instructions must be retained by the manufacturer and subsequent distributors for at least one year from the date of issuance, and made available for inspection by a Federal or State Government representative upon request. Packagings must be filled and closed in accordance with the information provided by the packaging manufacturer or subsequent distributor.

(b) *Liquid Category B infectious substances.* Liquid Category B infectious substances must be packaged in conformance with the following provisions:

(1) The primary receptacle must be leakproof.

(2) Absorbent material must be placed between the primary receptacle and secondary packaging. If several fragile primary receptacles are placed in a single secondary packaging, they must be either individually wrapped or separated to prevent contact between them. The absorbent material must be of sufficient quantity to absorb the entire contents of the primary receptacles and not compromise the integrity of the cushioning material or the outer packaging.

* * * * *

(5) For shipments by aircraft, the maximum quantity contained in each primary receptacle, including any material used to stabilize or prevent degradation of the sample, may not exceed 1 L (34 ounces), and the maximum quantity contained in each outer packaging, including any material used to stabilize or prevent degradation of the samples, may not exceed 4 L (1 gallon). The outer packaging limitation does not include ice, dry ice, or liquid nitrogen when used to maintain the integrity of the material.

(c) *Solid Category B infectious substances.* Solid Category B infectious substances must be packaged in a triple packaging, consisting of a primary receptacle, secondary packaging, and outer packaging, conforming to the following provisions:

(1) The primary receptacle must be siftproof.

(2) If several fragile primary receptacles are placed in a single secondary packaging, they must be either individually wrapped or separated to prevent contact between them.

(3) The secondary packaging must be siftproof.

(4) If there is any doubt as to whether residual liquid may be present in the primary receptacle during transportation, then the material must be transported in accordance with requirements in paragraph (b) of this section.

(5) Except for packages containing body parts, organs, or whole bodies, for shipment by aircraft, the outer packaging may not contain more than 4 kg (8.8 pounds), including any material used to stabilize or prevent degradation of the samples. The outer packaging limitation does not include ice, dry ice, or liquid nitrogen when used to maintain the integrity of the material.

(d) *Refrigerated or frozen specimens (ice, dry ice, and liquid nitrogen).* In addition to complying with the requirements in this paragraph (d), dry ice and liquid nitrogen must be offered for transportation or transported in accordance with the applicable requirements of this subchapter.

(1) Ice or dry ice must be placed outside the secondary packaging or in an overpack. Interior supports must be provided to secure the secondary packagings in the original position after the ice or dry ice has dissipated. If ice is used, the outside packaging must be leakproof or must have a leakproof liner. If dry ice is used, the outside packaging must permit the release of carbon dioxide gas and otherwise meet the provisions in § 173.217. The primary receptacle and secondary packaging must maintain their integrity at the temperature of the refrigerant used, as well as the temperatures and pressures of transport by aircraft they could be subjected to if refrigeration were lost, and sufficient absorbent material must be provided to absorb all liquid, including melted ice.

(2) The package is marked ''Carbon dioxide, solid'' or ''Dry ice'' and an indication that the material being refrigerated is used for diagnostic treatment purposes (*e.g.*, frozen medical specimens).

(e) *Used health care products.* A used health care product being returned to the manufacturer or the manufacturer's designee is excepted from the requirements of this subchapter when offered for transportation or transported in accordance with this section. For purposes of this section, a health care product is used when it has been removed from its original inner packaging. Used health care products contaminated with or suspected of contamination with a Category A infectious substance may not be transported under the provisions of this section.

* * * * *

(f) *Training.* Each person who offers or transports a Category B infectious substance or used health care product under the provisions of this section must know about the requirements of this section.

PART 175—CARRIAGE BY AIRCRAFT

16. The authority citation for part 175 continues to read as follows:

Authority: 49 U.S.C. 5101–5127; 49 CFR 1.53.

17. In § 175.630, the section heading is revised and paragraph (c) is added to read as follows:

§ 175.630 Special requirements for Division 6.1 (poisonous) material and Division 6.2 (infectious substances) materials.

* * * * *

(c) When unloaded from the aircraft, each package or overpack containing a Division 6.2 material must be inspected for signs of leakage. If evidence of leakage is found, the cargo compartment in which the package or overpack was transported must be disinfected. Disinfection may be by any means that will make the material released ineffective at transmitting disease.

Issued in Washington, DC, on May 10, 2005, under the authority delegated in 49 CFR part 106.

Robert A. McGuire,

Associate Administrator for Hazardous Materials Safety.

[FR Doc. 05–9717 Filed 5–18–05; 8:45 am]

BILLING CODE 4910–60–P

Reader Aids

Federal Register

Vol. 70, No. 96

Thursday, May 19, 2005

CUSTOMER SERVICE AND INFORMATION

Federal Register/Code of Federal Regulations	
General Information, indexes and other finding aids	**202–741–6000**
Laws	**741–6000**
Presidential Documents	
Executive orders and proclamations	**741–6000**
The United States Government Manual	**741–6000**
Other Services	
Electronic and on-line services (voice)	**741–6020**
Privacy Act Compilation	**741–6064**
Public Laws Update Service (numbers, dates, etc.)	**741–6043**
TTY for the deaf-and-hard-of-hearing	**741–6086**

ELECTRONIC RESEARCH

World Wide Web

Full text of the daily Federal Register, CFR and other publications is located at: **http://www.gpoaccess.gov/nara/index.html**

Federal Register information and research tools, including Public Inspection List, indexes, and links to GPO Access are located at: **http://www.archives.gov/federal__register/**

E-mail

FEDREGTOC-L (Federal Register Table of Contents LISTSERV) is an open e-mail service that provides subscribers with a digital form of the Federal Register Table of Contents. The digital form of the Federal Register Table of Contents includes HTML and PDF links to the full text of each document.

To join or leave, go to **http://listserv.access.gpo.gov** and select *Online mailing list archives, FEDREGTOC-L, Join or leave the list (or change settings);* then follow the instructions.

PENS (Public Law Electronic Notification Service) is an e-mail service that notifies subscribers of recently enacted laws.

To subscribe, go to **http://listserv.gsa.gov/archives/publaws-l.html** and select *Join or leave the list (or change settings);* then follow the instructions.

FEDREGTOC-L and **PENS** are mailing lists only. We cannot respond to specific inquiries.

Reference questions. Send questions and comments about the Federal Register system to: **fedreg.info@nara.gov**

The Federal Register staff cannot interpret specific documents or regulations.

FEDERAL REGISTER PAGES AND DATE, MAY

22585–22780 2
22781–23008 3
23009–23774 4
23775–23926 5
23927–24292 6
24293–24476 9
24477–24698 10
24699–24934 11
24935–25456 12
25457–25752 13
25753–28180 16
28181–28414 17
28415–28772 18
28773–29188 19

CFR PARTS AFFECTED DURING MAY

At the end of each month, the Office of the Federal Register publishes separately a List of CFR Sections Affected (LSA), which lists parts and sections affected by documents published since the revision date of each title.

3 CFR

Proclamations:
7890 23007
7891 23771
7892 23773
7893 23915
7894 23917
7895 23919
7896 23921
7897 24475
7898 24695
7899 25459
7900 28411
7901 28765
7902 28767

Administrative Orders:
Presidential Determinations:
No. 2005–23 of April 29, 2005 25457

Executive Orders:
12788 (Amended by EO 13378).....28413
13047 (See Notice of May 17, 2005).....28771
13310 (See Notice of May 17, 2005).....28771
13338 (See Notice of May 5, 2005).....24697
13378 28413

Administrative Orders:
Memorandums:
Memorandum of March 11, 2003 (Superceded by Memorandum of May 5, 2005).....28773
Memorandum of April 21, 2005 23925
Memorandum of May 5, 2005 28773
Notices:
Notice of May 5, 2005 24697
Notice of May 17, 2005 28771

5 CFR

213 28775
297 28775
315 28775
334 28775
362 28775
530 25732
532 28425
537 28775
550 .....24477, 28775
575 25732
1207 24293

Proposed Rules:
532 28488
Ch. LXXXI 23065

7 CFR

1 24935
2 23927
97 28783
301 24297
319 22585
340 23009
905 23928
1435 28181
1770 25753
1776 28786

Proposed Rules:
319 22612
946 25790
948 23942
983 23065

8 CFR

214 23775

9 CFR

78 22588

Proposed Rules:
94 23809
327 24485

10 CFR

72 .....22781, 24936
300 24302

Proposed Rules:
71 23303

11 CFR

Proposed Rules:
100 23068
106 23072
300 23072

12 CFR

201 24303
748 22764

14 CFR

25 24478
39 .....23783, 23784, 23911, 23930, 24304, 24305, 24307, 24480, 24481, 24699, 24701, 24703, 24936, 24937, 28181, 28184, 28186, 28187, 28188, 28415, 28417, 28419, 28420, 28791, 28793, 28795, 28797, 28800, 28803, 28806
61 25761
63 25761
65 25761
71 .....22590, 23002, 23786, 23787, 23788, 23789, 23790, 23934, 23935, 24677, 24939, 24940, 28423
93 29062
97 .....22781, 23002, 25764
121 23935
129 23935

150 29066
201 25765
203 25765
205 25765
215 25765
298 25765
380 25765
385 25765
389 25765
1260 28808
1273 28808
1274 28808
Proposed Rules:
39 ....22613, 22615, 22618, 22620, 22826, 24326, 24331, 24335, 24338, 24341, 24488, 24731, 24994, 24997, 28220, 28489, 28491, 28854, 28857, 28988
71 23810
401 29164
404 29164
413 29164
415 29164
420 29164

15 CFR
30 25773
335 ....24941, 25774
340 ....24941, 25774
Proposed Rules:
801 23811

16 CFR
Proposed Rules:
316 25426

17 CFR
1 28190
150 24705

18 CFR
284 28204
Proposed Rules:
35 ....23945, 28221, 28222
37 28222
38 28222
131 ....23945, 28221
154 ....23945, 28221
157 ....23945, 28221
250 ....23945, 28221
281 ....23945, 28221
284 ....23945, 28221
300 ....23945, 28221
341 ....23945, 28221
344 ....23945, 28221
346 ....23945, 28221
347 ....23945, 28221
348 ....23945, 28221
375 ....23945, 28221
385 ....23945, 28221

19 CFR
122 ....22782, 22783

20 CFR
404 28809
1001 28402

21 CFR
1 25461
1300 ....22591, 25462
1301 ....22591, 25462
1304 ....22591, 25462
1305 22591
1307 ....22591, 25462
Proposed Rules:
1 24490
101 ....23813, 25496
361 24491
1308 25502

22 CFR
62 28815
203 25466

23 CFR
771 24468

24 CFR
Proposed Rules:
115 28748
207 24272

25 CFR
542 23011
Proposed Rules:
61 28859

26 CFR
1 ....23790, 28211, 28702, 28818
31 28211
301 28702
602 28702
Proposed Rules:
1 ....24999, 28230, 28743
31 28231
301 ....24999, 28743

27 CFR
Proposed Rules:
9 ....25000, 28861, 28865, 28870, 28873

29 CFR
1952 24947
2200 ....22785, 25652
2204 22785
4022 25470
4044 25470
Proposed Rules:
1910 22828

30 CFR
913 28820
915 22792
917 22795
938 25472

31 CFR
10 28824
285 22797

32 CFR
701 25492

33 CFR
100 ....23936, 25778, 25780
110 28424
117 ....24482, 25781, 25783, 28426
150 24707
165 ....22800, 24309, 24955, 28426, 28428, 28826
402 28212
Proposed Rules:
100 ....23821, 23946
117 24492
165 ....23821, 23824, 23948, 23950, 24342, 24344, 25505, 25507, 25509, 25511, 25514

36 CFR
1253 22800
294 25654

37 CFR
270 24309

37 CFR
Proposed Rules:
258 28231

38 CFR
3 23027
17 22595
21 25785
36 22596
Proposed Rules:
5 24680

39 CFR
254 28213

40 CFR
51 25162
52 ....22597, 22599, 22603, 23029, 24310, 24959, 24970, 24979, 29487, 24991, 25688, 25719, 28215, 28429, 28826, 28988
60 28436
63 ....25666, 25676, 28360
70 ....22599, 22603
72 ....25162, 28606
73 25162
74 25162
75 28606
77 25162
78 25162
80 28606
81 ....22801, 22803
93 24280
96 25162
180 ....24709, 28436, 28443, 28447, 28452, 28455
300 ....22606, 24314
Proposed Rules:
51 25408
52 ....22623, 23075, 24347, 24348, 24734, 25000, 25004, 25008, 25516, 25794, 28233, 28239, 28252, 28256, 28260, 28264, 28267, 28495, 28878
63 ....25671, 25684, 28366
70 22623
82 25726
96 25408
141 25520
180 28497
271 25795
300 22624

41 CFR
301–2 28459
301–10 28459
301–11 28459
301–13 28459
301–50 28459
301–70 28459
301–71 28459
304–3 28459
304–5 28459
Proposed Rules:
102–117 23078
102–118 23078

42 CFR
50 28370
93 28370
412 24168
416 23690
Proposed Rules:
405 23306
412 23306
413 23306
415 23306
419 23306
422 23306
424 29070
485 23306

44 CFR
64 25787

45 CFR
80 24314
84 24314
86 24314
90 24314
91 24314

46 CFR
310 ....24483, 28829
Proposed Rules:
388 25010

47 CFR
0 23032
1 24712
2 ....23032, 24712
15 23032
25 24712
27 22610
73 ....24322, 24727, 28461, 28462, 28463
76 24727
90 ....24712, 28463
Proposed Rules:
64 24740
73 ....24748, 24749, 24750,28503
76 24350
90 23080

48 CFR
207 23790
211 23804
212 23790
217 24323
225 23790
252 23790
Proposed Rules:
204 23826
232 23827

49 CFR
192 28833
195 28833
386 28467
541 28843
543 28843
545 28843
565 23938
571 25788
622 24468
Proposed Rules:
Subt. A 23953

171 29170
172 29170
173 29170
175 29170
360 28990
365 28990
366 28990
368 28990
383 24358
387 28990
390 28990
571 ....23081, 23953, 28878, 28888

50 CFR

229 25492
635 28218
648 ....22806, 23939
660 ....22808, 23040, 23054, 23804, 24728, 25789, 28852
679 ....23940, 24992, 28486

Proposed Rules:

17 ....22835, 23083, 24750, 24870, 28895
20 ....22624, 22625, 23954
223 24359
622 25012
635 24494
679 23829
697 24495

REMINDERS

The items in this list were editorially compiled as an aid to Federal Register users. Inclusion or exclusion from this list has no legal significance.

RULES GOING INTO EFFECT MAY 19, 2005

AGRICULTURE DEPARTMENT

Rural Utilities Service

Rural Broadband Access Loans and Loan Guarantees; published 4-4-05

ENERGY DEPARTMENT

Federal Energy Regulatory Commission

Natural gas companies (Natural Gas Act):

Alaska natural gas transportation projects; conduct of open seasons; published 2-18-05

HOMELAND SECURITY DEPARTMENT

Coast Guard

Regattas and marine parades:

KFOG KaBoom Fireworks Display; published 5-16-05

INTERIOR DEPARTMENT

Surface Mining Reclamation and Enforcement Office

Permanent program and abandoned mine land reclamation plan submissions:

Illinois; published 5-19-05

NATIONAL AERONAUTICS AND SPACE ADMINISTRATION

Grant and cooperative agreement handbook:

Research misconduct defined; agency requirements implemented; published 5-19-05

POSTAL SERVICE

Procurement system:

Purchasing of property and services; published 4-19-05

TRANSPORTATION DEPARTMENT

Federal Aviation Administration

Air traffic operating and flight rules, etc.:

Ronald Reagan Washington National Airport, VA; commuter aircraft definition; published 5-19-05

Airworthiness directives:

Empresa Brasileira de Aeronautica, S.A. (EMBRAER); published 4-14-05

TRANSPORTATION DEPARTMENT

Maritime Administration

Merchant Marine training:

Maritime education and training; published 5-19-05

TREASURY DEPARTMENT

Internal Revenue Service

Income taxes:

Personal property exchanges; published 5-19-05

TREASURY DEPARTMENT

Practice and procedure:

Practice before Internal Revenue Service; published 5-19-05

COMMENTS DUE NEXT WEEK

AGRICULTURE DEPARTMENT

Agricultural Marketing Service

Avocados grown in—

South Florida; comments due by 5-27-05; published 4-27-05 [FR 05-08359]

Cotton classing, testing and standards:

Classification services to growers; 2004 user fees; Open for comments until further notice; published 5-28-04 [FR 04-12138]

Pistachios grown in—

California; comments due by 5-27-05; published 3-28-05 [FR 05-06082]

AGRICULTURE DEPARTMENT

Animal and Plant Health Inspection Service

Plant-related quarantine, domestic:

Karnal bunt; comments due by 5-27-05; published 3-28-05 [FR 05-06029]

AGRICULTURE DEPARTMENT

Natural Resources Conservation Service

Reports and guidance documents; availability, etc.:

National Handbook of Conservation Practices; Open for comments until further notice; published 5-9-05 [FR 05-09150]

COMMERCE DEPARTMENT

Industry and Security Bureau

Export administration regulations:

Deemed export licenses; clarification and revision; comments due by 5-27-05; published 3-28-05 [FR 05-06057]

COMMERCE DEPARTMENT

National Oceanic and Atmospheric Administration

Fishery conservation and management:

Alaska; fisheries of Exclusive Economic Zone—

Scallop Fishery License Limitation Program; comments due by 5-23-05; published 3-24-05 [FR 05-05860]

West Coast States and Western Pacific fisheries—

West Coast salmon; comments due by 5-26-05; published 5-11-05 [FR 05-09421]

COURT SERVICES AND OFFENDER SUPERVISION AGENCY FOR THE DISTRICT OF COLUMBIA

Semi-annual agenda; Open for comments until further notice; published 12-22-03 [FR 03-25121]

DEFENSE DEPARTMENT

Acquisition regulations:

Component breakout; comments due by 5-23-05; published 3-23-05 [FR 05-05627]

Contract modifications; comments due by 5-23-05; published 3-23-05 [FR 05-05624]

Contracting by negotiation; comments due by 5-23-05; published 3-23-05 [FR 05-05628]

Contractor performance of acquisition functions closely associated with inherently governmental functions; comments due by 5-23-05; published 3-23-05 [FR 05-05629]

Foreign acquisition; comments due by 5-23-05; published 3-23-05 [FR 05-05625]

Pilot Mentor-Protege Program; Open for comments until further notice; published 12-15-04 [FR 04-27351]

Totally enclosed lifeboat survival systems; restrictions; comments due by 5-23-05; published 3-23-05 [FR 05-05632]

EDUCATION DEPARTMENT

Grants and cooperative agreements; availability, etc.:

Vocational and adult education—

Smaller Learning Communities Program; Open for comments until further notice; published 2-25-05 [FR E5-00767]

ENERGY DEPARTMENT

Climate change:

Voluntary Greenhouse Gas reporting Program—

General guidelines; comments due by 5-23-05; published 3-24-05 [FR 05-05607]

Technical guidelines; comments due by 5-23-05; published 3-24-05 [FR 05-05606]

Meetings:

Environmental Management Site-Specific Advisory Board—

Oak Ridge Reservation, TN; Open for comments until further notice; published 11-19-04 [FR 04-25693]

ENERGY DEPARTMENT

Energy Efficiency and Renewable Energy Office

Commercial and industrial equipment; energy efficiency program:

Test procedures and efficiency standards—

Commercial packaged boilers; Open for comments until further notice; published 10-21-04 [FR 04-17730]

ENERGY DEPARTMENT

Federal Energy Regulatory Commission

Electric rate and corporate regulation filings:

Virginia Electric & Power Co. et al.; Open for comments until further notice; published 10-1-03 [FR 03-24818]

Electric utilities (Federal Power Act):

Open access transmission tariffs; intermittent generator imbalance service schedule; comments due by 5-26-05; published 4-26-05 [FR 05-08201]

ENVIRONMENTAL PROTECTION AGENCY

Air pollutants, hazardous; national emission standards:

Perchloroethylene dry cleaning, etc.; comments due by 5-24-05; published 3-25-05 [FR 05-05932]

Air quality implementation plans; approval and

promulgation; various States:
California; comments due by 5-25-05; published 4-25-05 [FR 05-08187]
Maryland; comments due by 5-26-05; published 4-26-05 [FR 05-08317]
Pennsylvania; comments due by 5-26-05; published 4-26-05 [FR 05-08323]
Virginia; comments due by 5-27-05; published 4-27-05 [FR 05-08436]
Environmental statements; availability, etc.:
Coastal nonpoint pollution control program—
Minnesota and Texas; Open for comments until further notice; published 10-16-03 [FR 03-26087]
Pesticide registration, cancellation, etc.:
Alachlor, etc.; comments due by 5-23-05; published 3-23-05 [FR 05-05724]
Pesticides; tolerances in food, animal feeds, and raw agricultural commodities:
Dinotefuran; comments due by 5-23-05; published 3-23-05 [FR 05-05620]
Mesotrione; comments due by 5-23-05; published 3-23-05 [FR 05-05719]
Thiophanate-methyl; comments due by 5-23-05; published 3-23-05 [FR 05-05720]
Radiation protection programs:
Transuranic radioactive waste for disposal at Waste Isolation Pilot Plant; waste characterization program documents availability,
Los Alamos National Laboratories; comments due by 5-27-05; published 4-27-05 [FR 05-08438]
Water pollution control:
National Pollutant Discharge Elimination System—
Concentrated animal feeding operations in New Mexico and Oklahoma; general permit for discharges; Open for comments until further notice; published 12-7-04 [FR 04-26817]
Water pollution; effluent guidelines for point source categories:
Meat and poultry products processing facilities; Open for comments until further notice; published 9-8-04 [FR 04-12017]

FEDERAL COMMUNICATIONS COMMISSION
Committees; establishment, renewal, termination, etc.:
Technological Advisory Council; Open for comments until further notice; published 3-18-05 [FR 05-05403]
Common carrier services:
Interconnection—
Incumbent local exchange carriers unbounding obligations; local competition provisions; wireline services offering advanced telecommunications capability; Open for comments until further notice; published 12-29-04 [FR 04-28531]
Unified intercarrier compensation regime; development; comments due by 5-23-05; published 3-24-05 [FR 05-05859]
Wireless telecommunications services—
800 MHz cellular handsets, telephones, and other wireless devices use aboard airborne aircraft; facilitation; comments due by 5-26-05; published 4-27-05 [FR 05-08411]
Radio services, special:
Private land mobile radio services—
764-776 MHz and 794-806 Mhz public safety bands; operational, technical, and spectrum requirements; comments due by 5-27-05; published 4-27-05 [FR 05-08203]

FEDERAL RETIREMENT THRIFT INVESTMENT BOARD
Thrift Savings Plan:
Lifecycle funds, etc.; comments due by 5-25-05; published 4-25-05 [FR 05-08078]

HEALTH AND HUMAN SERVICES DEPARTMENT
Centers for Medicare & Medicaid Services
Medicaid and Medicare:
Hospital participation conditions; standards for certification; comments due by 5-24-05; published 3-25-05 [FR 05-05916]
Medicare and medicaid:
Health care facilities; fire safety standards; comments due by 5-24-05; published 3-25-05 [FR 05-05919]

HEALTH AND HUMAN SERVICES DEPARTMENT
Food and Drug Administration
Reports and guidance documents; availability, etc.:
Evaluating safety of antimicrobial new animal drugs with regard to their microbiological effects on bacteria of human health concern; Open for comments until further notice; published 10-27-03 [FR 03-27113]
Medical devices—
Dental noble metal alloys and base metal alloys; Class II special controls; Open for comments until further notice; published 8-23-04 [FR 04-19179]

HOMELAND SECURITY DEPARTMENT
Coast Guard
Anchorage regulations:
Maryland; Open for comments until further notice; published 1-14-04 [FR 04-00749]
Mississippi; comments due by 5-27-05; published 4-27-05 [FR 05-08458]
Outer Continental Shelf activities:
Gulf of Mexico; safety zones; comments due by 5-23-05; published 3-23-05 [FR 05-05765]
Ports and waterways safety:
Alaska; high capacity passenger vessels protection; regulated navigation area and security zones; comments due by 5-27-05; published 4-27-05 [FR 05-08349]
Charleston Harbor, Cooper River, SC; security zones; comments due by 5-26-05; published 5-6-05 [FR 05-09036]
Georgetown Channel, Potomac River, Washington, DC; security zone; comments due by 5-26-05; published 5-6-05 [FR 05-09077]
New Haven, CT; Long Island Sound annual fireworks displays; security zone; comments due by 5-25-05; published 5-5-05 [FR 05-08940]
Regattas and marine parades:
Annual Offshore Super Series Boat Race; comments due by 5-26-05; published 4-26-05 [FR 05-08263]

INTERIOR DEPARTMENT
Fish and Wildlife Service
Endangered and threatened species permit applications
Recovery plans—
Paiute cutthroat trout; Open for comments until further notice; published 9-10-04 [FR 04-20517]
Endangered and threatened species:
American crocodile; comments due by 5-23-05; published 3-24-05 [FR 05-05640]

LIBRARY OF CONGRESS
Copyright Office, Library of Congress
Copyright office and procedures:
Sound recordings under statutory license; notice and recordkeeping; comments due by 5-27-05; published 4-27-05 [FR 05-08435]

NATIONAL CREDIT UNION ADMINISTRATION
Credit unions:
Credit Union Service Organizations; audit requirement; comments due by 5-23-05; published 3-23-05 [FR 05-05677]

NUCLEAR REGULATORY COMMISSION
Environmental statements; availability, etc.:
Fort Wayne State Developmental Center; Open for comments until further notice; published 5-10-04 [FR 04-10516]
Production and utilization facilities; domestic licensing:
Fire protection; post-fire operator manual actions; comments due by 5-23-05; published 3-7-05 [FR 05-04314]

SMALL BUSINESS ADMINISTRATION
Disaster loan areas:
Maine; Open for comments until further notice; published 2-17-04 [FR 04-03374]

SOCIAL SECURITY ADMINISTRATION
Civil monetary penalties, assessments and recommended exclusions; comments due by 5-23-05; published 3-23-05 [FR 05-05717]

OFFICE OF UNITED STATES TRADE REPRESENTATIVE
Trade Representative, Office of United States
Generalized System of Preferences:

2003 Annual Product Review, 2002 Annual Country Practices Review, and previously deferred product decisions; petitions disposition; Open for comments until further notice; published 7-6-04 [FR 04-15361]

TRANSPORTATION DEPARTMENT

Federal Aviation Administration

Air carrier certification and operations:

Transport category airplanes—

Front row passenger seats; acceptable compliance methods; comments due by 5-26-05; published 4-26-05 [FR 05-08136]

Air traffic operating and flight rules, etc.:

Chicago O'Hare International Airport, IL; congestion and delay reduction; comments due by 5-24-05; published 3-25-05 [FR 05-05882]

Airworthiness directives:

Airbus; comments due by 5-23-05; published 4-21-05 [FR 05-07997]

Boeing; comments due by 5-26-05; published 4-11-05 [FR 05-07154]

Dornier; comments due by 5-26-05; published 4-26-05 [FR 05-08271]

Learjet; comments due by 5-23-05; published 4-6-05 [FR 05-06767]

McDonnell Douglas; comments due by 5-23-05; published 4-6-05 [FR 05-06765]

PZL-Swidnik S.A.; comments due by 5-27-05; published 4-27-05 [FR 05-08406]

Special conditions—

Airbus model A380-800 airplane; comments due by 5-27-05; published 4-12-05 [FR 05-07320]

Airworthiness standards:

Special conditions—

Airbus Model A318 airplanes; comments due by 5-26-05; published 4-11-05 [FR 05-07192]

Airbus Model A320 airplanes; comments due by 5-26-05; published 4-11-05 [FR 05-07195]

Garmin International Inc. electronic flight instrument system; comments due by 5-23-05; published 4-21-05 [FR 05-07977]

Area navigation routes; comments due by 5-26-05; published 4-11-05 [FR 05-07250]

Class B airspace; comments due by 5-23-05; published 3-24-05 [FR 05-05095]

Class D airspace; comments due by 5-27-05; published 4-27-05 [FR 05-08348]

Class E airspace; comments due by 5-27-05; published 4-27-05 [FR 05-08345]

TREASURY DEPARTMENT

Internal Revenue Service

Income taxes:

Section 1502 miscellaneous operating rules for successor persons; succession to items of liquidating corporation; comments due by 5-23-05; published 2-22-05 [FR 05-03220]

TREASURY DEPARTMENT

Currency and foreign transactions; financial reporting and recordkeeping requirements:

Bank Secrecy Act; implementation—

Multibanka; special measure imposition due to designation as institution of primary money laundering concern; comments due by 5-26-05; published 4-26-05 [FR 05-08279]

VEF Banka; special measure imposition due to designation as institution of primary money laundering concern; comments due by 5-26-05; published 4-26-05 [FR 05-08280]

TREASURY DEPARTMENT

Alcohol and Tobacco Tax and Trade Bureau

Alcohol; viticultural area designations:

Santa Lucia Highlands and Arroyo Seco; Monterey County, CA; comments due by 5-25-05; published 3-8-05 [FR 05-04483]

LIST OF PUBLIC LAWS

This is a continuing list of public bills from the current session of Congress which have become Federal laws. It may be used in conjunction with "P L U S" (Public Laws Update Service) on 202–741–6043. This list is also available online at *http://www.archives.gov/federal_register/public_laws/public_laws.html*.

The text of laws is not published in the **Federal Register** but may be ordered in "slip law" (individual pamphlet) form from the Superintendent of Documents, U.S. Government Printing Office, Washington, DC 20402 (phone, 202–512–1808). The text will also be made available on the Internet from GPO Access at *http://www.gpoaccess.gov/plaws/index.html*. Some laws may not yet be available.

H.R. 1268/P.L. 109–13

Emergency Supplemental Appropriations Act for Defense, the Global War on Terror, and Tsunami Relief, 2005 (May 11, 2005; 119 Stat. 231)

Last List May 9, 2005

Public Laws Electronic Notification Service (PENS)

PENS is a free electronic mail notification service of newly enacted public laws. To subscribe, go to *http://listserv.gsa.gov/archives/publaws-l.html*

Note: This service is strictly for E-mail notification of new laws. The text of laws is not available through this service. **PENS** cannot respond to specific inquiries sent to this address.