AUTHENTICATED U.S. GOVERNMENT INFORMATION GPO

Federal Register

11–1–05 Tuesday
Vol. 70 No. 210 Nov. 1, 2005

Pages 65825–66246

The **FEDERAL REGISTER** (ISSN 0097–6326) is published daily, Monday through Friday, except official holidays, by the Office of the Federal Register, National Archives and Records Administration, Washington, DC 20408, under the Federal Register Act (44 U.S.C. Ch. 15) and the regulations of the Administrative Committee of the Federal Register (1 CFR Ch. I). The Superintendent of Documents, U.S. Government Printing Office, Washington, DC 20402 is the exclusive distributor of the official edition. Periodicals postage is paid at Washington, DC.

The **FEDERAL REGISTER** provides a uniform system for making available to the public regulations and legal notices issued by Federal agencies. These include Presidential proclamations and Executive Orders, Federal agency documents having general applicability and legal effect, documents required to be published by act of Congress, and other Federal agency documents of public interest.

Documents are on file for public inspection in the Office of the Federal Register the day before they are published, unless the issuing agency requests earlier filing. For a list of documents currently on file for public inspection, see *www.archives.gov.*

The seal of the National Archives and Records Administration authenticates the Federal Register as the official serial publication established under the Federal Register Act. Under 44 U.S.C. 1507, the contents of the **Federal Register** shall be judicially noticed.

The **Federal Register** is published in paper and on 24x microfiche. It is also available online at no charge as one of the databases on GPO Access, a service of the U.S. Government Printing Office.

The online edition of the **Federal Register** *www.gpoaccess.gov/nara,* available through GPO Access, is issued under the authority of the Administrative Committee of the Federal Register as the official legal equivalent of the paper and microfiche editions (44 U.S.C. 4101 and 1 CFR 5.10). It is updated by 6 a.m. each day the **Federal Register** is published and includes both text and graphics from Volume 59, Number 1 (January 2, 1994) forward.

For more information about GPO Access, contact the GPO Access User Support Team, call toll free 1-888-293-6498; DC area 202-512-1530; fax at 202-512-1262; or via e-mail at *gpoaccess@gpo.gov.* The Support Team is available between 7:00 a.m. and 9:00 p.m. Eastern Time, Monday–Friday, except official holidays.

The annual subscription price for the **Federal Register** paper edition is $749 plus postage, or $808, plus postage, for a combined **Federal Register, Federal Register** Index and List of CFR Sections Affected (LSA) subscription; the microfiche edition of the **Federal Register** including the **Federal Register** Index and LSA is $165, plus postage. Six month subscriptions are available for one-half the annual rate. The prevailing postal rates will be applied to orders according to the delivery method requested. The price of a single copy of the daily **Federal Register,** including postage, is based on the number of pages: $11 for an issue containing less than 200 pages; $22 for an issue containing 200 to 400 pages; and $33 for an issue containing more than 400 pages. Single issues of the microfiche edition may be purchased for $3 per copy, including postage. Remit check or money order, made payable to the Superintendent of Documents, or charge to your GPO Deposit Account, VISA, MasterCard, American Express, or Discover. Mail to: New Orders, Superintendent of Documents, P.O. Box 371954, Pittsburgh, PA 15250-7954; or call toll free 1-866-512-1800, DC area 202-512-1800; or go to the U.S. Government Online Bookstore site, see *bookstore.gpo.gov.*

There are no restrictions on the republication of material appearing in the **Federal Register.**

How To Cite This Publication: Use the volume number and the page number. Example: 70 FR 12345.

Postmaster: Send address changes to the Superintendent of Documents, Federal Register, U.S. Government Printing Office, Washington DC 20402, along with the entire mailing label from the last issue received.

SUBSCRIPTIONS AND COPIES

PUBLIC

Subscriptions:

Paper or fiche	**202–512–1800**
Assistance with public subscriptions	**202–512–1806**

General online information **202–512–1530; 1–888–293–6498**

Single copies/back copies:

Paper or fiche	**202–512–1800**
Assistance with public single copies	**1–866–512–1800 (Toll-Free)**

FEDERAL AGENCIES

Subscriptions:

Paper or fiche	**202–741–6005**
Assistance with Federal agency subscriptions	**202–741–6005**

FEDERAL REGISTER WORKSHOP

THE FEDERAL REGISTER: WHAT IT IS AND HOW TO USE IT

FOR: Any person who uses the Federal Register and Code of Federal Regulations.

WHO: Sponsored by the Office of the Federal Register.

WHAT: Free public briefings (approximately 3 hours) to present:

1. The regulatory process, with a focus on the Federal Register system and the public's role in the development of regulations.

2. The relationship between the Federal Register and Code of Federal Regulations.

3. The important elements of typical Federal Register documents.

4. An introduction to the finding aids of the FR/CFR system.

WHY: To provide the public with access to information necessary to research Federal agency regulations which directly affect them. There will be no discussion of specific agency regulations.

WHEN: Wednesday, November 30, 2005
9:00 a.m.–Noon

WHERE: Office of the Federal Register
Conference Room, Suite 700
800 North Capitol Street, NW.
Washington, DC 20002

RESERVATIONS: (202) 741–6008

Printed on recycled paper.

Contents

Federal Register

Vol. 70, No. 210

Tuesday, November 1, 2005

Agriculture Department
See Commodity Credit Corporation
See Forest Service

Arts and Humanities, National Foundation
See National Foundation on the Arts and the Humanities

Centers for Disease Control and Prevention
NOTICES
Organization, functions, and authority delegations:
National Center for HIV, STD, and TB Prevention, 65901–65902

Centers for Medicare & Medicaid Services
NOTICES
Grant and cooperative agreement awards:
MedCO Health Solutions, Inc., 65902

Children and Families Administration
NOTICES
Agency information collection activities; proposals, submissions, and approvals, 65902–65904

Coast Guard
RULES
Ports and waterways safety; regulated navigation areas, safety zones, security zones, etc.:
Puget Sound Captain of Port Zone, WA, 65838
St. Mary's River, GA, 65835–65837
NOTICES
Agency information collection activities; proposals, submissions, and approvals, 65922–65923
Environmental statements; notice of intent:
Passage Island Light Station, MI, 65923–65926
Meetings:
Great Lakes Regional Waterways Management Forum, 65926

Commerce Department
See Foreign-Trade Zones Board
See International Trade Administration
See National Oceanic and Atmospheric Administration
NOTICES
Agency information collection activities; proposals, submissions, and approvals, 65880–65882

Committee for the Implementation of Textile Agreements
NOTICES
Textile and apparel categories:
Harmonized Tariff Schedule of United States—
China; ski and snowboard pants; category 647/648 exemption; directive to Customs and Boarder Protection Commissioner, 65889–65890

Commodity Credit Corporation
NOTICES
Agency information collection activities; proposals, submissions, and approvals, 65877

Defense Department
RULES
National Security Personnel System; establishment, 66116–66220

Defense Nuclear Facilities Safety Board
NOTICES
Senior Executive Service:
Performance Review Board; membership, 65890

Education Department
NOTICES
Agency information collection activities; proposals, submissions, and approvals, 65890–65891

Energy Department
See Federal Energy Regulatory Commission
NOTICES
Presidential permit applications:
Montana Alberta Tie Ltd., 65891

Environmental Protection Agency
RULES
Air quality implementation plans; approval and promulgation; various States:
Delaware, 65847–65849
Pennsylvania, 65842–65847
Tennessee, 65838–65842
Superfund program:
Landowner liability protection; standards for conducting appropriate inquiries into previous ownership, uses, and environmental conditions of property, 66070–66113
PROPOSED RULES
Air pollution; standards of performance for new stationary sources:
Predictive emission monitoring systems; performance specifications; testing and monitoring provisions amendments, 65873–65874
Air quality implementation plans:
Ambient air quality standards, national—
Fine particles, 65984–66067
Air quality implementation plans; approval and promulgation; various States:
Tennessee, 65873
NOTICES
Agency information collection activities; proposals, submissions, and approvals, 65892–65898
Air pollution control:
State operating permits programs—
Illinois, 65898–65899
Water supply:
Public water system supervision program—
Indiana, 65899–65900

Executive Office of the President
See Presidential Documents

Export-Import Bank
NOTICES
Meetings; Sunshine Act, 65900

Federal Aviation Administration
RULES
Airworthiness directives:
Mitsubishi, 65827–65832
Area navigation routes; correction, 65832–65833

Standard instrument approach procedures, 65833–65834
PROPOSED RULES
Air carrier certification and operations:
Flightdeck door monitoring and crew discreet alerting systems
Correction, 65866
Airworthiness directives:
AvCraft Dornier, 65864–65866
NOTICES
Environmental statements; availability, etc.:
Space Exploration Technologies, Inc.; Falcon 1 launch vehicle, 65961–65963
Grants and cooperative agreements; availability, etc.:
Military Airport Program, 65963–65966

Federal Communications Commission
RULES
Common carrier services:
Federal-State Joint Board on Universal Service—
Hurricane Katrina; Universal Service funds availability for reconstruction and remediation related to telecommunications services restoration, 65850–65861

Federal Emergency Management Agency
RULES
Flood insurance; communities eligible for sale:
Maine and North Carolina, 65849–65850
NOTICES
Disaster and emergency areas:
Florida, 65926–65927
Louisiana, 65927
Massachusetts, 65927–65928
Mississippi, 65928–65929
Texas, 65929

Federal Energy Regulatory Commission
PROPOSED RULES
Electric utilities (Fed. Power Act), natural gas companies (Natural Gas Act), Natural Gas Policy Act, and oil pipelines (Interstate Commerce Act):
Contested audit matters; disposition procedures, 65866–65871

Federal Highway Administration
NOTICES
Environmental statements; notice of intent:
Miami-Dade County, FL, 65966

Federal Reserve System
NOTICES
Banks and bank holding companies:
Change in bank control, 65900
Permissible nonbanking activities, 65900

Federal Transit Administration
NOTICES
Grant and cooperative agreement awards:
Over-the-Road Bus Accessibility Program, 65966–65968

Financial Management Service
See Fiscal Service

Fiscal Service
NOTICES
Federal debt collection and discount and rebate evaluation; Treasury current value of funds rate, 65980

Fish and Wildlife Service
NOTICES
Comprehensive conservation plans; availability, etc.:
Rappahannock River Valley National Wildlife Refuge, VA, 65931–65932
Endangered and threatened species permit determinations, etc., 65932
Environmental statements; availability, etc.:
Housatonic River Watershed Restoration Program, MA, 65932–65933

Food and Drug Administration
RULES
Animal drugs, feeds, and related products:
Invermectin and praziquantel paste, 65835
NOTICES
Agency information collection activities; proposals, submissions, and approvals, 65904–65905
Reports and guidance documents; availability, etc.:
Transport vehicles decontamination; notice to growers, food manufacturers, food warehouse managers, and food products transporters, 65905

Foreign-Trade Zones Board
NOTICES
Applications, hearings, determinations, etc.:
Alabama
Mobis Alabama, LLC; automotive components and subassemblies manufacturing and processing facility, 65882
Georgia, 65882–65883

Forest Service
NOTICES
Appealable decisions; legal notice:
Southern Region, 65877–65880
Environmental statements; availability, etc.:
Hoosier National Forest, IN, 65880

Health and Human Services Department
See Centers for Disease Control and Prevention
See Centers for Medicare & Medicaid Services
See Children and Families Administration
See Food and Drug Administration
See Health Resources and Services Administration
See National Institutes of Health
NOTICES
Meetings:
HIV/AIDS Presidential Advisory Council, 65900–65901

Health Resources and Services Administration
NOTICES
Agency information collection activities; proposals, submissions, and approvals, 65905–65906

Homeland Security Department
See Coast Guard
See Federal Emergency Management Agency
See Immigration and Customs Enforcement Bureau
See U.S. Citizenship and Immigration Services

Housing and Urban Development Department
NOTICES
Agency information collection activities; proposals, submissions, and approvals, 65931
Grants and cooperative agreements; availability, etc.:
Universities Rebuilding America Partnerships—Community Design Program, 66228–66236

Historically Black Colleges and Universities Program, 66238–66246
Public and Indian housing:
Hurricanes Rita and Katrina disaster areas; regulatory and administrative waivers granted to assist with recovery and relief, 66222–66226

Immigration and Customs Enforcement Bureau
NOTICES
Agency information collection activities; proposals, submissions, and approvals, 65929–65930

Interior Department
See Fish and Wildlife Service
See Land Management Bureau
See Minerals Management Service

International Trade Administration
NOTICES
Antidumping:
Superalloy degassed chromium from—
Japan, 65886–65887
Antidumping and countervailing duties:
Administrative review requests, 65883–65884
Five year (sunset) reviews—
Advance notification, 65885–65886
Initiation of reviews, 65884–65885

Land Management Bureau
NOTICES
Meetings:
Energy Policy Act of 2005; geothermal provisions implementation, 65933–65934
Oil and gas leases:
Colorado, 65934
Montana, 65934
Wyoming, 65934

Maritime Administration
NOTICES
Agency information collection activities; proposals, submissions, and approvals, 65968–65969

Minerals Management Service
NOTICES
Meetings:
Outer Continental Shelf Policy Committee, 65934–65935

National Foundation on the Arts and the Humanities
NOTICES
Meetings:
Arts Advisory Panel, 65935

National Highway Traffic Safety Administration
NOTICES
Motor vehicle safety standards:
Exemption petitions, etc.—
DOT Chemical, 65969–65970
Toyota Motor North America, Inc., 65970–65972
Lamps, reflective devices, and associated equipment—
Replacement equipment; interpretation, 65972–65976

National Institutes of Health
NOTICES
Agency information collection activities; proposals, submissions, and approvals, 65906–65908
Meetings:
Biosecurity National Science Advisory Board, 65908–65909
National Cancer Institute, 65909
National Heart, Lung, and Blood Institute, 65909–65910
National Human Genome Research Institute, 65910
National Institute of Arthritis and Musculoskeletal and Skin Diseases, 65912
National Institute of Child Health and Human Development, 65911
National Institute of Diabetes and Digestive and Kidney Diseases, 65913–65914
National Institute of Environmental Health Sciences, 65910–65912
National Institute of General Medical Sciences, 65912
National Institute of Mental Health, 65910–65911
National Institute of Neurological Disorders and Stroke, 65912–65913
Scientific Review Center, 65914–65922

National Oceanic and Atmospheric Administration
RULES
Fishery conservation and management:
Alaska; fisheries of Exclusive Economic Zone—
Pollock, 65863
West Coast States and Western Pacific fisheries—
Spiny dogfish, 65861–65863
PROPOSED RULES
Fishery conservation and management:
Northeastern United States fisheries—
Atlantic surfclam and ocean quahog, 65874–65876
NOTICES
Agency information collection activities; proposals, submissions, and approvals, 65887–65889

Nuclear Regulatory Commission
NOTICES
Meetings:
Byproduct material; expanded definition; regulatory framework, 65935–65936
Reactor Safeguards Advisory Committee, 65936–65937

Personnel Management Office
RULES
National Security Personnel System; establishment, 66116–66220

Presidential Documents
ADMINISTRATIVE ORDERS
Immigration; refugee admission numbers and authorization (Presidential Determination)
No. 2006-3 of October 24, 2005, 65825–65826

Public Debt Bureau
See Fiscal Service

Securities and Exchange Commission
NOTICES
Investment Company Act of 1940:
Gladstone Capital Corp. et al., 65939–65941
Self-regulatory organizations; proposed rule changes:
American Stock Exchange LLC et al., 65941–65942
Chicago Board Options Exchange, Inc., 65942–65945
New York Stock Exchange, Inc., 65945–65947
Pacific Exchange, Inc., 65948–65953
Philadelphia Stock Exchange, Inc., 65953–65956
Stock Clearing Corp. of Philadelphia, 65956
Applications, hearings, determinations, etc.:
Cavanta Holding Corp., 65937
SBC Communications Inc., 65937–65938

Small Business Administration
NOTICES
Disaster loan areas:
Alabama, 65956
Louisiana, 65956–65957
Mississippi, 65957

Social Security Administration
PROPOSED RULES
Ticket to Work and Self-Sufficiency Program
Town hall meetings, 65871–65873
NOTICES
Meetings:
Ticket to Work and Work Incentives Advisory Panel, 65957–65958

Surface Transportation Board
NOTICES
Environmental statements; notice of intent:
Alaska Railroad Corp., 65976–65978
Railroad operation, acquisition, construction, etc.:
Delray Connecting Railroad Co., 65978–65979

Tennessee Valley Authority
NOTICES
Environmental statements; record of decision:
Stewart County-Montgomery County 500-kV transmission line, TN, 65958–65961

Textile Agreements Implementation Committee
See Committee for the Implementation of Textile Agreements

Transportation Department
See Federal Aviation Administration
See Federal Highway Administration
See Federal Transit Administration
See Maritime Administration
See National Highway Traffic Safety Administration
See Surface Transportation Board

Treasury Department
See Fiscal Service
NOTICES
Agency information collection activities; proposals, submissions, and approvals, 65979

U.S. Citizenship and Immigration Services
NOTICES
Agency information collection activities; proposals, submissions, and approvals, 65930–65931

Veterans Affairs Department
NOTICES
Veterans Health Administration physicians and dentists; annual pay ranges, 65980–65981

Separate Parts In This Issue

Part II
Environmental Protection Agency, 65984–66067

Part III
Environmental Protection Agency, 66070–66113

Part IV
Defense Department; Personnel Management Office, 66116–66220

Part V
Housing and Urban Development Department, 66222–66226

Part VI
Housing and Urban Development Department, 66228–66236

Part VII
Housing and Urban Development Department, 66238–66246

Reader Aids
Consult the Reader Aids section at the end of this issue for phone numbers, online resources, finding aids, reminders, and notice of recently enacted public laws.

To subscribe to the Federal Register Table of Contents LISTSERV electronic mailing list, go to http://listserv.access.gpo.gov and select Online mailing list archives, FEDREGTOC-L, Join or leave the list (or change settings); then follow the instructions.

CFR PARTS AFFECTED IN THIS ISSUE

A cumulative list of the parts affected this month can be found in the Reader Aids section at the end of this issue.

3 CFR

Administrative Orders:

Presidential Determinations:

No. 2006-03 of October 24, 2005 65825

5 CFR

Ch. XCIX.....66116

9901.....66116

14 CFR

39.....65827

71.....65832

97.....65833

Proposed Rules:

39.....65864

121.....65866

18 CFR

Proposed Rules:

41.....65866

158.....65866

286.....65866

349.....65866

20 CFR

Proposed Rules:

411.....65871

21 CFR

520.....65835

33 CFR

165 (2 documents) 65835, 65838

40 CFR

52 (4 documents) 65838, 65842, 65845, 65847

312.....66070

Proposed Rules:

51.....65984

52 (2 documents) 65873, 65984

60.....65873

63.....65873

44 CFR

64.....65849

47 CFR

54.....65850

50 CFR

660.....65861

679.....65863

Proposed Rules:

648.....65874

Federal Register
Vol. 70, No. 210
Tuesday, November 1, 2005

Presidential Documents

Title 3—

The President

Presidential Determination No. 2006–3 of October 24, 2005

Presidential Determination on FY 2006 Refugee Admissions Numbers and Authorizations of In-Country Refugee Status Pursuant to Sections 207 and 101(a)(42), respectively, of the Immigration and Nationality Act, and Determination Pursuant to Section 2(b)(2) of the Migration and Refugee Assistance Act, as Amended

Memorandum for the Secretary of State

In accordance with Section 207 of the Immigration and Nationality Act (the ''Act'') (8 U.S.C. 1157), as amended, and after appropriate consultations with the Congress, I hereby make the following determinations and authorize the following actions:

The admission of up to 70,000 refugees to the United States during FY 2006 is justified by humanitarian concerns or is otherwise in the national interest; provided, however, that this number shall be understood as including persons admitted to the United States during FY 2006 with Federal refugee resettlement assistance under the Amerasian immigrant admissions program, as provided below.

The 70,000 admissions numbers shall be allocated among refugees of special humanitarian concern to the United States in accordance with the following regional allocations; provided, however, that the number allocated to the East Asia region shall include persons admitted to the United States during FY 2006 with Federal refugee resettlement assistance under section 584 of the Foreign Operations, Export Financing, and Related Programs Appropriations Act of 1988, as contained in section 101(e) of Public Law 100–202 (Amerasian immigrants and their family members); provided further that the number allocated to the former Soviet Union shall include persons admitted who were nationals of the former Soviet Union, or in the case of persons having no nationality, who were habitual residents of the former Soviet Union, prior to September 2, 1991:

Africa	20,000
East Asia	15,000
Europe and Central Asia	15,000
Latin America/Caribbean	5,000
Near East/South Asia	5,000
Unallocated Reserve	10,000

The 10,000 unallocated refugee numbers shall be allocated to regional ceilings as needed. Upon providing notification to the Judiciary Committees of the Congress, you are hereby authorized to use unallocated numbers in regions where the need for additional numbers arises.

Additionally, upon notification to the Judiciary Committees of the Congress, you are further authorized to transfer unused admission numbers allocated to a particular region to one or more other regions, if there is a need for greater numbers for the region or regions to which the numbers are being transferred. Consistent with section 2(b)(2) of the Migration and Refugee Assistance Act of 1962, as amended, I hereby determine that assistance to or on behalf of persons applying for admission to the United States as part of the overseas refugee admissions program will contribute to the

foreign policy interests of the United States and designate such persons for this purpose.

Consistent with section 101(a)(42) of the Act (8 U.S.C. 1101(a)(42)) and after appropriate consultation with the Congress, I also specify that, for FY 2006, the following persons may, if otherwise qualified, be considered refugees for the purpose of admission to the United States within their countries of nationality or habitual residence:

a. Persons in Vietnam
b. Persons in Cuba
c. Persons in the former Soviet Union
d. In exceptional circumstances, persons identified by a United States Embassy in any location

You are authorized and directed to report this determination to the Congress immediately and to publish it in the **Federal Register**.

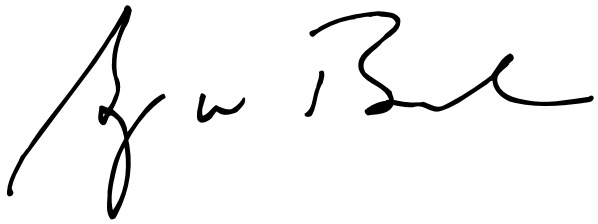

THE WHITE HOUSE,
Washington, October 24, 2005.

[FR Doc. 05–21862
Filed 10–31–05; 8:45 am]
Billing code 4710–10–P

Rules and Regulations

Federal Register

Vol. 70, No. 210

Tuesday, November 1, 2005

This section of the FEDERAL REGISTER contains regulatory documents having general applicability and legal effect, most of which are keyed to and codified in the Code of Federal Regulations, which is published under 50 titles pursuant to 44 U.S.C. 1510.

The Code of Federal Regulations is sold by the Superintendent of Documents. Prices of new books are listed in the first FEDERAL REGISTER issue of each week.

DEPARTMENT OF TRANSPORTATION

Federal Aviation Administration

14 CFR Part 39

[Docket No. 98–NM–300–AD; Amendment 39–14355; AD 2005–22–11]

RIN 2120–AA64

Airworthiness Directives; Mitsubishi Model YS–11 Airplanes, and Model YS–11A–200, YS–11A–300, YS–11A–500, and YS–11A–600 Series Airplanes

AGENCY: Federal Aviation Administration (FAA), Department of Transportation (DOT).

ACTION: Final rule.

SUMMARY: This amendment adopts a new airworthiness directive (AD), applicable to certain Mitsubishi Model YS–11 airplanes, and Model YS–11A–200, YS–11A–300, YS–11A–500, and YS–11A–600 series airplanes. This AD requires repetitive removal of the spinner; repetitive detailed inspections of the propeller hub to detect fatigue cracking; and replacement of a propeller hub with a new propeller hub, if necessary. This action is necessary to detect and correct fatigue cracking of the propeller hub, which could cause the loss of the propeller. This action is intended to address the identified unsafe condition.

DATES: Effective December 6, 2005.

ADDRESSES: The service information referenced in this AD may be obtained from Nihon Aeroplane Manufacturing, Toranomon Daiichi, Kotohire-Cho, Shiba, Minato-Ku, Tokyo, Japan. This information may be examined at the Federal Aviation Administration (FAA), Transport Airplane Directorate, Rules Docket, 1601 Lind Avenue, SW., Renton, Washington; or at the FAA, Los Angeles Aircraft Certification Office, 3960 Paramount Boulevard, Lakewood, California.

FOR FURTHER INFORMATION CONTACT: Brent Bandley, Project Engineer, Continuing Operational Safety, ANM–100L, FAA, Los Angeles Aircraft Certification Office, 3960 Paramount Boulevard, Lakewood, California 90712–4137; telephone (562) 627–5237; fax (562) 627–5210.

SUPPLEMENTARY INFORMATION: A proposal to amend part 39 of the Federal Aviation Regulations (14 CFR part 39) to include an airworthiness directive (AD) that is applicable to all Mitsubishi Model YS–11 and YS–11A series airplanes was published in the **Federal Register** on August 31, 1999 (64 FR 47442). That action proposed to require repetitive removal of the spinner; repetitive detailed visual inspections of the propeller hub to detect fatigue cracking; and replacement of a propeller hub with a new propeller hub, if necessary.

Comments

Interested persons have been afforded an opportunity to participate in the making of this amendment. Due consideration has been given to the comments received.

Request To Include Only Airplanes With Incorrectly Inspected Propeller Hubs

Two commenters, the airplane manufacturer and the Japan Civil Aviation Bureau (JCAB), which is the airworthiness authority for Japan, request that we limit the airplanes affected by the notice of proposed rulemaking (NPRM) to those that have propeller hubs that were inspected incorrectly. The commenters explain that, after we issued the NPRM, which applies to all Mitsubishi Model YS–11 and YS–11A series airplanes, the JCAB found some discrepancies in procedures that an overhauler used when inspecting the hub. The JCAB revised its airworthiness directive and issued Japanese airworthiness directive TCD–4667A–98, dated March 18, 1998, to apply only to the hubs that were inspected incorrectly. The commenters request that we incorporate the list of applicable propellers into the final rule.

We infer that the commenters are also stating that hubs that were correctly inspected are not subject to the stated unsafe condition. We agree with the commenters; only propeller hubs that were incorrectly inspected are subject to the unsafe condition. Therefore, the final rule should be applicable only to airplanes on which these incorrectly inspected propeller hubs are installed. The Japanese airworthiness directive identifies the affected propellers by serial number. We have revised the summary and applicability of the final rule to reflect this change and to include only those serial numbers.

Request To Exclude Airplanes With Strengthened Propeller Hubs

The same commenters request that we exclude from the applicability any affected airplane that has a propeller hub that was strengthened in accordance with Dowty Rotol Service Bulletin 61–921, dated April 24, 1980, or later version approved by the JCAB. The commenters state that strengthened hubs do not require a repetitive visual inspection. The Japanese airworthiness directive excludes from its applicability all airplanes that have strengthened hubs; however, JCAB also notes in its comment that there have been two reports of cracks in strengthened hubs. In addition, the commenters request that we incorporate the actions in this service bulletin into the requirements of the final rule.

We do not agree with the commenters. The JCAB noted that there have been two reports of cracks found in hubs that have been modified in accordance with the Dowty Rotol service bulletin. We have determined that propellers with the strengthened hubs do have a potential unsafe cracking condition because it has been reported that strengthened hubs have also cracked. The strengthened hubs should not be excluded from the applicability and inspection requirements of the final rule. We have not changed the final rule in this regard.

Explanation of Further Changes to the Final Rule

We have revised the applicability to reflect the model designations as published in the most recent type certificate data sheets.

We have changed paragraph (a)(2) of the final rule to refer to the repair procedure to follow if any crack is detected in a hub.

We have changed references to a ''detailed visual inspection'' to ''detailed inspection.'' We have included the definition for a detailed inspection in a note in the final rule.

Although the Japanese airworthiness directive referenced in this AD specifies to submit certain information to the JCAB, this AD does not include that requirement.

We have revised this action to clarify the appropriate procedure for notifying the principal inspector before using any approved AMOC on any airplane to which the AMOC applies.

Conclusion

After careful review of the available data, including the comments noted above, the FAA has determined that air safety and the public interest require the adoption of the rule with the changes described previously. The FAA has determined that these changes will neither increase the economic burden on any operator nor increase the scope of the AD.

Changes to 14 CFR Part 39/Effect on the AD

On July 10, 2002, the FAA issued a new version of 14 CFR part 39 (67 FR 47997, July 22, 2002), which governs the FAA's airworthiness directives system. The regulation now includes material that relates to altered products, special flight permits, and alternative methods of compliance. However, for clarity and consistency in this final rule, we have retained the language of the NPRM regarding that material.

Cost Impact

Since we issued the NPRM, we have determined that none of the airplanes affected by this action are on the U.S. Register. All airplanes affected by this AD are currently operated by non-U.S. operators under foreign registry; therefore, they are not directly affected by this AD action. However, we consider this AD necessary to ensure that the unsafe condition is addressed if any affected airplane is imported and placed on the U.S. Register in the future. If an affected airplane is imported and placed on the U.S. Register in the future, the required actions would take about 32 work hours per airplane to accomplish the inspection, and that the average labor rate is $65 per work hour. Based on these figures, the estimated cost of the AD would be $2,080 per airplane.

The cost impact figure discussed above is based on assumptions that no operator has yet accomplished any of the requirements of this AD action, and that no operator would accomplish those actions in the future if this AD were not adopted. The cost impact figures discussed in AD rulemaking actions represent only the time necessary to perform the specific actions actually required by the AD. These figures typically do not include incidental costs, such as the time required to gain access and close up, planning time, or time necessitated by other administrative actions.

Authority for This Rulemaking

Title 49 of the United States Code specifies the FAA's authority to issue rules on aviation safety. Subtitle I, section 106, describes the authority of the FAA Administrator. Subtitle VII, Aviation Programs, describes in more detail the scope of the Agency's authority.

We are issuing this rulemaking under the authority described in subtitle VII, part A, subpart III, section 44701, ''General requirements.'' Under that section, Congress charges the FAA with promoting safe flight of civil aircraft in air commerce by prescribing regulations for practices, methods, and procedures the Administrator finds necessary for safety in air commerce. This regulation is within the scope of that authority because it addresses an unsafe condition that is likely to exist or develop on products identified in this rulemaking action.

Regulatory Impact

The regulations adopted herein will not have a substantial direct effect on the States, on the relationship between the National Government and the States, or on the distribution of power and responsibilities among the various levels of government. Therefore, it is determined that this final rule does not have federalism implications under Executive Order 13132.

For the reasons discussed above, I certify that this action (1) is not a ''significant regulatory action'' under Executive Order 12866; (2) is not a ''significant rule'' under DOT Regulatory Policies and Procedures (44 FR 11034, February 26, 1979); and (3) will not have a significant economic impact, positive or negative, on a substantial number of small entities under the criteria of the Regulatory Flexibility Act. A final evaluation has been prepared for this action and it is contained in the Rules Docket. A copy of it may be obtained from the Rules Docket at the location provided under the caption **ADDRESSES.**

List of Subjects in 14 CFR Part 39

Air transportation, Aircraft, Aviation safety, Safety.

Adoption of the Amendment

■ Accordingly, pursuant to the authority delegated to me by the Administrator, the Federal Aviation Administration amends part 39 of the Federal Aviation Regulations (14 CFR part 39) as follows:

PART 39—AIRWORTHINESS DIRECTIVES

■ 1. The authority citation for part 39 continues to read as follows:

Authority: 49 U.S.C. 106(g), 40113, 44701.

§ 39.13 [Amended]

■ 2. Section 39.13 is amended by adding the following new airworthiness directive:

2005–22–11 Mitsubishi Heavy Industries, LTD.: Amendment 39–14355. Docket 98–NM–300–AD.

Applicability: Model YS–11 airplanes, and Model YS–11A–200, YS–11A–300, YS–11A–500, and YS–11A–600 series airplanes, certificated in any category; having propeller hubs with the following serial numbers: CHE942, DRG1/74, DRG7/68, DRG8/68, DRG13/70, DRG14/71, DRG31/68, DRG33/70, DRG34/68, DRG35/68, DRG48/69, DRG53/69, DRG65/78, DRG72/69, DRG73/68, DRG75/69, DRG83/65, DRG87/68, DRG105/67, DRG126/70, DRG128/68, DRG130/70, DRG132/68, DRG132/70, DRG134/68, DRG137/67, DRG150/69, DRG154/65, DRG161/70, DRG179/68, DRG180/68, DRG194/63, DRG208/67, DRG231/70, DRG238/65, DRG275/68, DRG281/68, DRG284/64, DRG300/63, DRG302/67, DRG308/64, DRG308/66, DRG486/67, and DRG551/67.

Note 1: This AD applies to each airplane identified in the preceding applicability provision, regardless of whether it has been modified, altered, or repaired in the area subject to the requirements of this AD. For airplanes that have been modified, altered, or repaired so that the performance of the requirements of this AD is affected, the owner/operator must request approval for an alternative method of compliance in accordance with paragraph (b) of this AD. The request should include an assessment of the effect of the modification, alteration, or repair on the unsafe condition addressed by this AD; and, if the unsafe condition has not been eliminated, the request should include specific proposed actions to address it.

Compliance: Required as indicated, unless accomplished previously.

To detect and correct fatigue cracking of the propeller hub, which could cause the loss of the propeller, accomplish the following:

Inspection and Replacement

(a) Within 25 flight hours or 30 days after the effective date of this AD, whichever occurs first, remove the spinner and perform a detailed inspection for cracking of the propeller hub in the crack area shown in Figure 1 of this AD.

Note 2: For the purposes of this AD, a detailed inspection is: ''An intensive examination of a specific item, installation, or assembly to detect damage, failure, or irregularity. Available lighting is normally supplemented with a direct source of good lighting at an intensity deemed appropriate. Inspection aids such as mirror, magnifying

lenses, etc., may be necessary. Surface cleaning and elaborate procedures may be required.''

(1) If no crack is found, repeat the actions required by paragraph (a) of this AD thereafter at intervals not to exceed 25 flight hours.

(2) If any crack is detected, prior to further flight, replace the hub with a new hub according to a method approved by either the Manager, Los Angeles Aircraft Certification Office (ACO), FAA; or the Japan Civil Aviation Bureau (JCAB) (or its delegated agent). Chapter 61 of the Nihon Aeroplane Manufacturing Company YS–11 and YS–11A Aircraft Maintenance Manuals is one approved method. Repeat the actions required by paragraph (a) of this AD thereafter at intervals not to exceed 25 flight hours.

BILLING CODE 4910–13–P

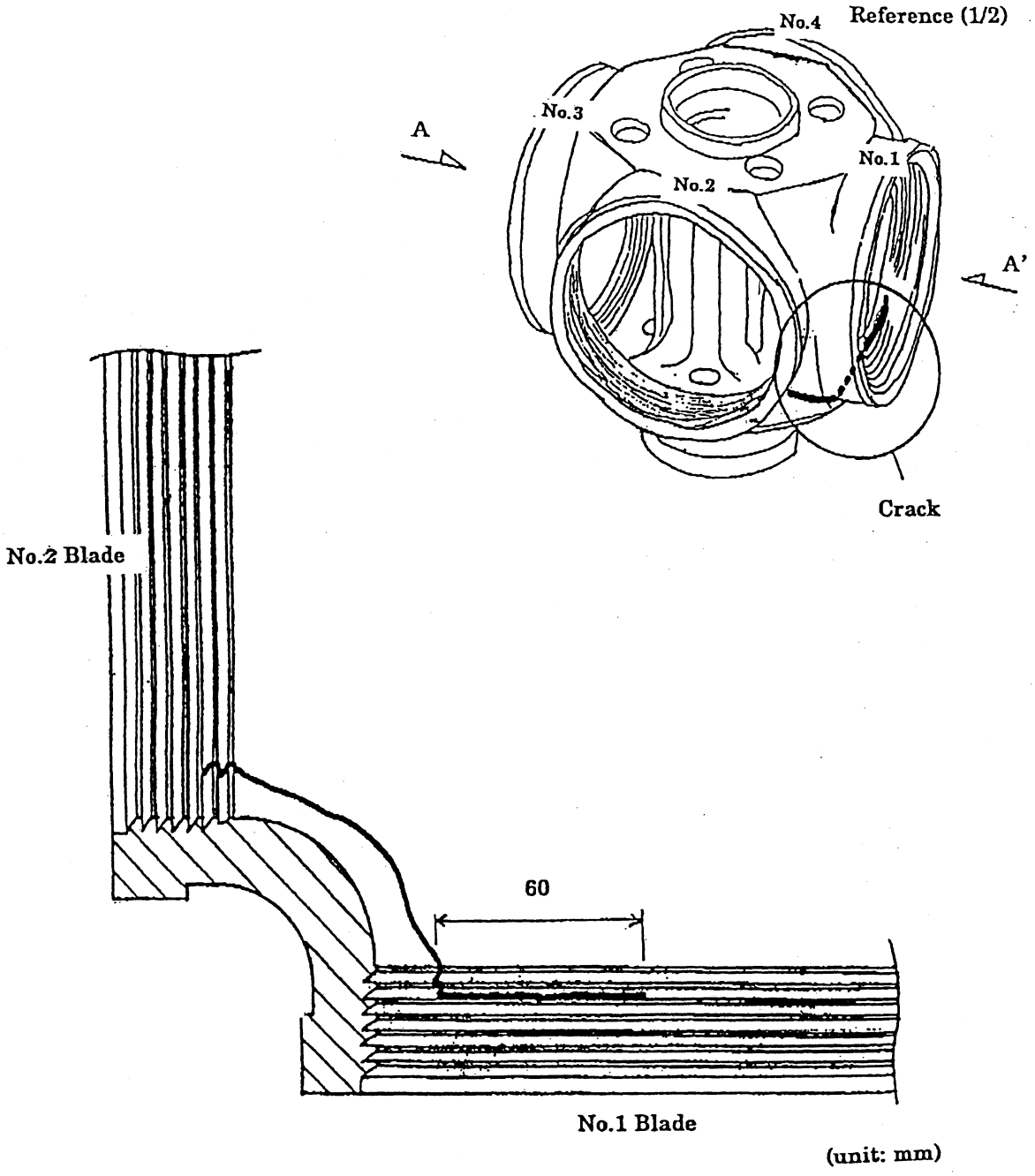

HUB CRACK - VIEW FROM TOP

(Cut A—A')

Reference (2/2)

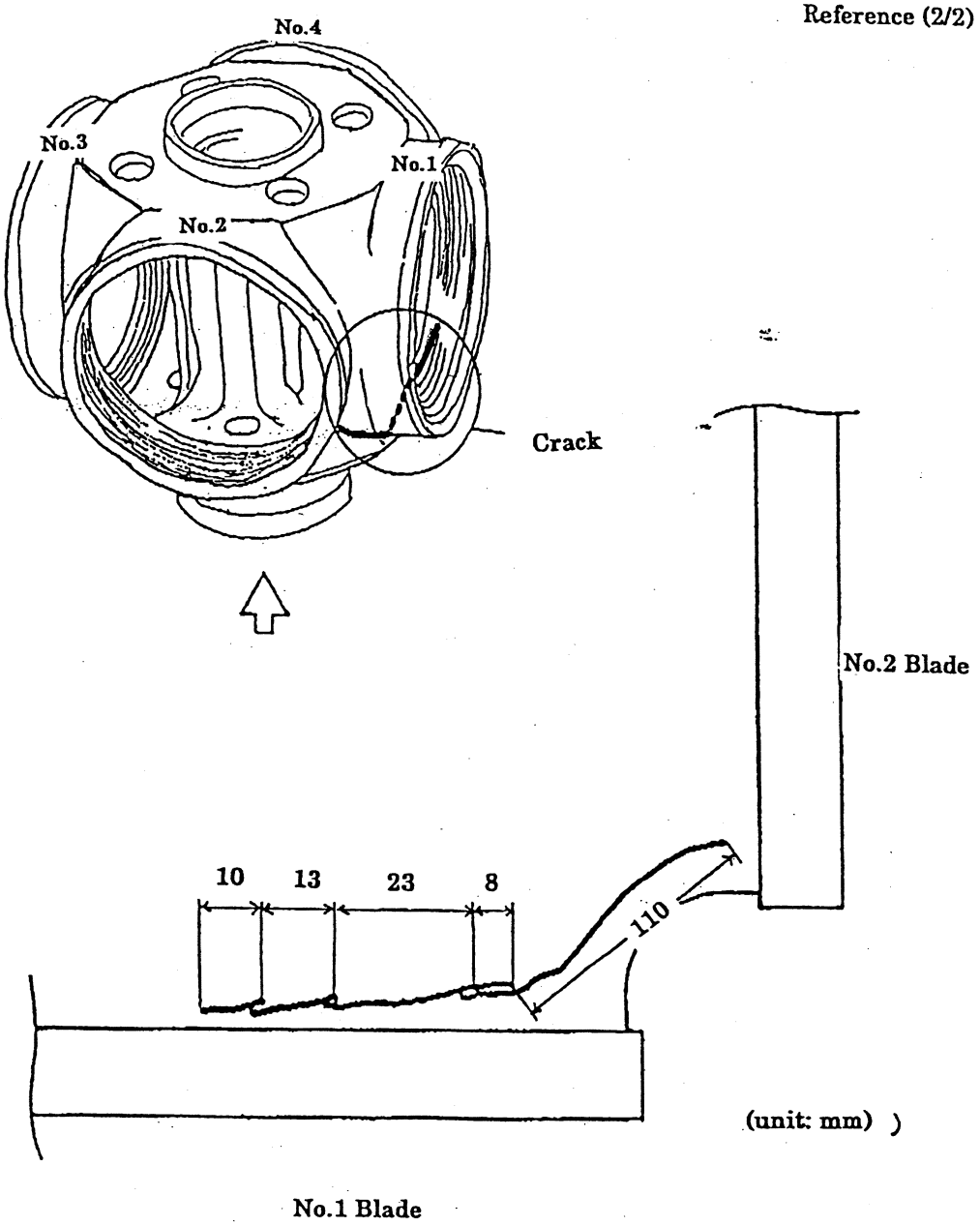

HUB CRACK - VIEW FROM BOTTOM

BILLING CODE 4910–13–C

Alternative Methods of Compliance

(b)(1) An alternative method of compliance or adjustment of the compliance time that provides an acceptable level of safety may be used if approved by the Manager, Los Angeles ACO. Operators shall submit their requests through an appropriate FAA Principal Maintenance Inspector, who may add comments and then send it to the Manager, Los Angeles ACO.

(2) Before using any AMOC approved in accordance with § 39.19 on any airplane to which the AMOC applies, notify the appropriate principal inspector in the FAA Flight Standards Certificate Holding District Office.

Note 3: Information concerning the existence of approved alternative methods of compliance with this AD, if any, may be obtained from the Los Angeles ACO.

Special Flight Permits

(c) Special flight permits may be issued for non-revenue bearing flights with essential crew only in accordance with sections 21.197 and 21.199 of the Federal Aviation Regulations (14 CFR 21.197 and 21.199) to operate the airplane to a location where the requirements of this AD can be accomplished.

Note 4: The subject of this AD is addressed in Japanese airworthiness directive TCD–4667A–98, dated March 18, 1998.

Incorporation by Reference

(d) None.

Effective Date

(e) This amendment becomes effective on December 6, 2005.

Issued in Renton, Washington, on October 20, 2005.

Kalene C. Yanamura,

Acting Manager, Transport Airplane Directorate, Aircraft Certification Service.

[FR Doc. 05–21543 Filed 10–31–05; 8:45 am]

BILLING CODE 4910–13–C

DEPARTMENT OF TRANSPORTATION

Federal Aviation Administration

14 CFR Part 71

[Docket No. FAA–2005–20322; Airspace Docket No. 05–ANM–1]

RIN 2120–AA66

Establishment and Revision of Area Navigation (RNAV) Routes; Western United States

AGENCY: Federal Aviation Administration (FAA), DOT.

ACTION: Final rule; correction.

SUMMARY: This action corrects errors in the legal description of Area Navigation (RNAV) Routes listed in a final rule published in the **Federal Register** on October 14, 2005 (70 FR 59990), Airspace Docket No. 05–ANM–1.

EFFECTIVE DATE: 0901 UTC, December 22, 2005.

FOR FURTHER INFORMATION CONTACT: Ken McElroy, Airspace and Rules, Office of System Operations Airspace and AIM, Federal Aviation Administration, 800 Independence Avenue, SW., Washington, DC 20591; telephone: (202) 267–8783.

SUPPLEMENTARY INFORMATION:

History

On October 14, 2005, a final rule was published in the **Federal Register** (70 FR 59990), Airspace Docket No. 05–ANM–1. This rule established three RNAV routes (Q–15, Q–2, Q–4, and revised Q–13) in the Western United States. In all four routes, points that were listed in the route descriptions as ''waypoint'' (WP) are actually existing published navigation ''fixes.'' Therefore, the descriptions are corrected by removing ''WP'' and substituting ''Fix.'' In addition, the title for Q–13 was reversed. This action corrects those errors.

Correction to Final Rule

■ Accordingly, pursuant to the authority delegated to me, the legal description for Q–13, Q–15, Q–2 and Q–4, as published in the **Federal Register** on October 14, 2005 (70 FR 59990), Airspace Docket No. 05–ANM–1, are corrected as follows:

PART 71—[AMENDED]

§ 71.1 [Amended]

* * * * *

Q–13 PRFUM to PAWLI [Corrected]

PRFUM	Fix	(Lat. 35°30′24″ N., long. 113°56′35″ W.)
CENIT	WP	(Lat. 36°41′02″ N., long. 116°26′31″ W.)
TUMBE	WP	(Lat. 36°48′20″ N., long. 116°40′03″ W.)
TACUS	WP	(Lat. 37°05′16″ N., long. 116°54′12″ W.)
WODIN	WP	(Lat. 37°19′20″ N., long. 117°05′25″ W.)
LEAHI	WP	(Lat. 37°28′58″ N., long. 117°14′57″ W.)
LOMIA	WP	(Lat. 39°13′12″ N., long. 119°06′23″ W.)
RUFUS	WP	(Lat. 41°26′00″ N., long. 120°00′00″ W.)
PAWLI	WP	(Lat. 43°10′48″ N., long. 120°55′50″ W.)

* * * * * * *

Q–15 CHILY to LOMIA [Corrected]

CHILY	Fix	(Lat. 34°42′49″ N., long. 112°45′42″ W.)
DOVEE	Fix	(Lat. 35°26′51″ N., long. 114°48′01″ W.)
BIKKR	WP	(Lat. 36°34′00″ N., long. 116°45′00″ W.)
DOBNE	WP	(Lat. 37°14′23″ N., long. 117°15′04″ W.)
RUSME	WP	(Lat. 37°29′39″ N., long. 117°31′12″ W.)
LOMIA	WP	(Lat. 39°13′12″ N., long. 119°06′23″ W.)

* * * * * * *

Q–2 BOILE to EWM [Corrected]

BOILE	Fix	(Lat. 34°25′21″ N., long. 118°01′33″ W.)
HEDVI	WP	(Lat. 33°32′23″ N., long. 114°28′14″ W.)
HOBOL	WP	(Lat. 33°11′30″ N., long. 112°20′00″ W.)
ITUCO	WP	(Lat. 32°26′30″ N., long. 109°46′26″ W.)
EWM	VORTAC	(Lat. 31°57′06″ N., long. 106°16′21″ W.)

* * * * * * *

Q–4 BOILE to ELP [Corrected]

BOILE	Fix	(Lat. 34°25′21″ N., long. 118°01′33″ W.)
HEDVI	WP	(Lat. 33°32′23″ N., long. 114°28′14″ W.)
SCOLE	Fix	(Lat. 33°27′46″ N., long. 114°04′54″ W.)

SPTFR	WP	(Lat. 33°23′49″ N., long. 113°43′29″ W.)
ZEBOL	WP	(Lat. 33°03′30″ N., long. 112°31′00″ W.)
SKTTR	WP	(Lat. 32°17′38″ N., long. 109°50′44″ W.)
ELP	VORTAC	(Lat. 31°48′57″ N., long. 106°16′55″ W.)

* * * * * * *

Issued in Washington, DC, on October 26, 2005.

Edith V. Parish,

Acting Manager, Airspace and Rules.

[FR Doc. 05–21745 Filed 10–31–05; 8:45 am]

BILLING CODE 4910–13–P

DEPARTMENT OF TRANSPORTATION

Federal Aviation Administration

14 CFR Part 97

[Docket No. 30462; Amdt. No. 3138]

Standard Instrument Approach Procedures, Weather Takeoff Minimums; Miscellaneous Amendments

AGENCY: Federal Aviation Administration (FAA), DOT.

ACTION: Final rule.

SUMMARY: This amendment establishes, amends, suspends, or revokes Standard Instrument Approach Procedures (SIAPs) and/or Weather Takeoff Minimums for operations at certain airports. These regulatory actions are needed because of the adoption of new or revised criteria, or because of changes occurring in the National Airspace System, such as the commissioning of new navigational facilities, addition of new obstacles, or changes in air traffic requirements. These changes are designed to provide safe and efficient use of the navigable airspace and to promote safe flight operations under instrument flight rules at the affected airports.

DATES: This rule is effective November 1, 2005. The compliance date for each SIAP and/or Weather Takeoff Minimums is specified in the amendatory provisions.

The incorporation by reference of certain publications listed in the regulations is approved by the Director of the **Federal Register** as of November 1, 2005.

ADDRESSES: Availability of matters incorporated by reference in the amendment is as follows:

For Examination

1. FAA Rules Docket, FAA Headquarters Building, 800 Independence Avenue, SW., Washington, DC 20591;

2. The FAA Regional Office of the region in which the affected airport is located;

3. The National Flight Procedures Office, 6500 South MacArthur Blvd., Oklahoma City, OK 73169 or,

4. The National Archives and Records Administration (NARA). For information on the availability of this material at NARA, call 202–741–6030, or go to: *http://www.archives.gov/federal_register/code_of_federal_regulations/ibr_locations.html.*

For Purchase

Individual SIAP and Weather Takeoff Minimums copies may be obtained from:

1. FAA Public Inquiry Center (APA–200), FAA Headquarters Building, 800 Independence Avenue, SW., Washington, DC 20591; or

2. The FAA Regional Office of the region in which the affected airport is located.

By Subscription

Copies of all SIAPs and Weather Takeoff Minimums mailed once every 2 weeks, are for sale by the Superintendent of Documents, U.S. Government Printing Office, Washington, DC 20402.

FOR FURTHER INFORMATION CONTACT: Donald P. Pate, Flight Procedure Standards Branch (AFS–420), Flight Technologies and Programs Division, Flight Standards Service, Federal Aviation Administration, Mike Monroney Aeronautical Center, 6500 South MacArthur Blvd. Oklahoma City, OK. 73169 (Mail Address: P.O. Box 25082 Oklahoma City, OK. 73125) telephone: (405) 954–4164.

SUPPLEMENTARY INFORMATION: This amendment to Title 14 of the Code of Federal Regulations, Part 97 (14 CFR part 97), establishes, amends, suspends, or revokes SIAPs and/or Weather Takeoff Minimums. The complete regulatory description of each SIAP and/or Weather Takeoff Minimums is contained in official FAA form documents which are incorporated by reference in this amendment under 5 U.S.C. 552(a), 1 CFR part 51, and 14 CFR part 97.20. The applicable FAA Forms are identified as FAA Forms 8260–3, 8260–4, 8260–5 and 8260–15A. Materials incorporated by reference are available for examination or purchase as stated above.

The large number of SIAPs and/or Weather Takeoff Minimums, their complex nature, and the need for a special format make their verbatim publication in the **Federal Register** expensive and impractical. Further, airmen do not use the regulatory text of the SIAPs and/or Weather Takeoff Minimums but refer to their depiction on charts printed by publishers of aeronautical materials. Thus, the advantages of incorporation by reference are realized and publication of the complete description of each SIAP and/or Weather Takeoff Minimums contained in FAA form documents is unnecessary. The provisions of this amendment state the affected CFR sections, with the types and effective dates of the SIAPs and/or Weather Takeoff Minimums. This amendment also identifies the airport, its location, the procedure identification and the amendment number.

The Rule

This amendment to 14 CFR part 97 is effective upon publication of each separate SIAP and/or Weather Takeoff Minimums as contained in the transmittal. Some SIAP and/or Weather Takeoff Minimums amendments may have been previously issued by the FAA in a Flight Data Center (FDC) Notice to Airmen (NOTAM) as an emergency action of immediate flight safety relating directly to published aeronautical charts. The circumstances which created the need for some SIAP, and/or Weather Takeoff Minimums amendments may require making them effective in less than 30 days. For the remaining SIAPs and/or Weather Takeoff Minimums, an effective date at least 30 days after publication is provided.

Further, the SIAPs and/or Weather Takeoff Minimums contained in this amendment are based on the criteria contained in the U.S. Standard for Terminal Instrument Procedures (TERPS). In developing these SIAPs and/or Weather Takeoff Minimums, the TERPS criteria were applied to the conditions existing or anticipated at the affected airports. Because of the close and immediate relationship between these SIAPs and/or Weather Takeoff Minimums and safety in air commerce, I find that notice and public procedure

before adopting these SIAPs and/or Weather Takeoff Minimums are impracticable and contrary to the public interest and, where applicable, that good cause exists for making some SIAPs and/or Weather Takeoff Minimums effective in less than 30 days.

Conclusion

The FAA has determined that this regulation only involves an established body of technical regulations for which frequent and routine amendments are necessary to keep them operationally current. It, therefore (1) is not a ''significant regulatory action'' under Executive Order 12866; (2) is not a ''significant rule'' under DOT Regulatory Policies and Procedures (44 FR 11034; February 26, 1979); and (3) does not warrant preparation of a regulatory evaluation as the anticipated impact is so minimal. For the same reason, the FAA certifies that this amendment will not have a significant economic impact on a substantial number of small entities under the criteria of the Regulatory Flexibility Act.

List of Subjects in 14 CFR part 97

Air Traffic Control, Airports, Incorporation by reference, and Navigation (Air).

Issued in Washington, DC on October 21, 2005.

James J. Ballough,

Director, Flight Standards Service.

Adoption of the Amendment

■ Accordingly, pursuant to the authority delegated to me, under Title 14, Code of Federal Regulations, Part 97 (14 CFR part 97) is amended by establishing, amending, suspending, or revoking Standard Instrument Approach Procedures and Weather Takeoff Minimums effective at 0901 UTC on the dates specified, as follows:

PART 97—STANDARD INSTRUMENT APPROACH PROCEDURES

■ 1. The authority citation for part 97 continues to read as follows:

Authority: 49 U.S.C. 106(g), 40103, 40106, 40113, 40114, 40120, 44502, 44514, 44701, 44719, 44721–44722.

2. Part 97 is amended to read as follows:

** * * Effective December 22, 2005*

Atmore, AL, Atmore Muni, RNAV (GPS) RWY 18, Orig
Atmore, AL, Atmore Muni, RNAV (GPS) RWY 36, Orig
Atmore, AL, Atmore Muni, Takeoff Minimums & Textual DP, Orig
St. Paul Island, AK, St. Paul Island, RNAV (GPS) RWY 36, Orig
St. Paul Island, AK, St. Paul Island, GPS RWY 36, Orig, CANCELLED
St. Paul Island, AK, St. Paul Island, ILS OR LOC/DME RWY 36, Amdt 2
St. Paul Island, AK, St. Paul Island, LOC/DME BC RWY 18, Amdt 3
St. Paul Island, AK, St. Paul Island, NDB–A, Amdt 1
St. Paul Island, AK, St. Paul Island, Takeoff Minimums & Textual DP, Amdt 2
Yakutat, AK, Yakutat, RNAV (GPS) RWY 11, Amdt 1
Yakutat, AK, Yakutat, RNAV (GPS) RWY 29, Amdt 1
Yakutat, AK, Yakutat, VOR/DME RWY 2, Amdt 3
Yakutat, AK, Yakutat, VOR/DME RWY 29, Amdt 2
Yakutat, AK, Yakutat, LOC/DME BC RWY 29, Amdt 4
Springdale, AR, Springdale Muni, RNAV (GPS) RWY 18, Amdt 1A
Oakdale, CA, Oakdale, VOR–A, Orig
Oakdale, CA, Oakdale, RNAV (GPS) RWY 10, Orig
Oakdale, CA, Oakdale, RNAV (GPS) RWY 28, Orig
Oakdale, CA, Oakdale, GPS RWY 10, Orig, CANCELLED
Oakdale, CA, Oakdale, Takeoff Minimums and Textual DP, Orig
Jacksonville, FL, Cecil Field, RADAR–1, Orig, CANCELLED
Jacksonville, FL, Jacksonville Intl, RNAV (GPS) RWY 31, Amdt 1
Boise, ID, Boise Air Terminal/Gowen Fld, RNAV (GPS) RWY 28R, Amdt 1
Sheldon, IA, Sheldon Muni, RNAV (GPS) RWY 15, Orig
Sheldon, IA, Sheldon Muni, RNAV (GPS) RWY 33, Orig
Sheldon, IA, Sheldon Muni, NDB RWY 33, Amdt 7
Sheldon, IA, Sheldon Muni, VOR OR GPS RWY 33, Amdt 1A, CANCELLED
Parsons, KS, Tri-City, NDB RWY 17, Amdt 9A
London, KY, London-Corbin Arpt-Magee Fld, ILS RWY 6, Orig
London, KY, London-Corbin Arpt-Magee Fld, Takeoff Minimums and Textual DP, Amdt 3
Paducah, KY, West Kentucky Airpark, GPS RWY 4, Orig, CANCELLED
Paducah, KY, West Kentucky Airpark, GPS RWY 22, Orig, CANCELLED
Grand Isle, LA, Grand Isle, VOR OR GPS–A, Amdt 8, CANCELLED
Grand Isle, LA, Grand Isle, VOR/DME OR GPS–C, Amdt 7, CANCELLED
Frankfort, MI, Frankfort Dow Memorial Field, VOR/DME–A, Orig
Frankfort, MI, Frankfort Dow Memorial Field, VOR OR GPS–A, Amdt 3, CANCELLED
Freemont, MI, Fremont Muni, RNAV (GPS) RWY 18, Orig
Fremont, MI, Fremont Muni, RNAV (GPS) RWY 36, Orig
Fremont, MI, Fremont Muni, VOR RWY 18, Orig
Fremont, MI, Fremont Muni, VOR RWY 36, Amdt 7
Fremont, MI, Fremont Muni, GPS RWY 18, Orig, CANCELLED
Kennett, MO, Kennett Memorial, RNAV (GPS) RWY 2, Orig
Kennett, MO, Kennett Memorial, RNAV (GPS) RWY 20, Orig
Kennett, MO, Kennett Memorial, NDB RWY 2, Orig
Kennett, MO, Kennett Memorial, NDB RWY 20, Orig
Kennett, MO, Kennett Memorial, VOR/DME RWY 20, Orig
Kennett, MO, Kennett Memorial, NDB OR GPS RWY 18, Amdt 3, CANCELLED
Kennett, MO, Kennett Memorial, Takeoff Minimums and Textual DP, Amdt 1
Albuquerque, NM, Albuquerque Intl Sunport, ILS OR LOC RWY 3, Amdt 2
Eugene, OR, Mahlon Sweet Field, ILS OR LOC Y RWY 16R, Orig
Eugene, OR, Mahlon Sweet Field, ILS OR LOC/DME Z RWY 16R, Amdt 35, ILS RWY 16R (CAT II), ILS RWY 16R (CAT III), Amdt 35
Portland, OR, Portland-Hillsboro, VOR/DME–C, Orig
Portland, OR, Portland-Hillsboro, NDB–B, Amdt 2
Portland, OR, Portland-Hillsboro, VOR/DME OR GPS–A, Orig-B, CANCELLED
Portland, OR, Portland-Hillsboro, Takeoff Minimums and Textual DP, Amdt 5
The Dalles, OR, Columbia Gorge Regional/The Dalles Muni, RNAV (GPS)–A, Orig
The Dalles, OR, Columbia Gorge Regional/The Dalles Muni, VOR/DME OR GPS–A, Amdt 4, CANCELLED
Barnwell, SC, Barnwell County, RNAV (GPS) RWY 17, Amdt 1
Barnwell, SC, Barnwell County, NDB RWY 17, Orig
Barnwell, SC, Barnwell County, NDB–A, Amdt 1, CANCELLED
Barnwell, SC, Barnwell County, NDB RWY 4, Amdt 2A, CANCELLED
Delta, UT, Delta Muni, RNAV (GPS) RWY 17, Orig
Delta, UT, Delta Muni, RNAV (GPS) RWY 35, Orig
Delta, UT, Delta Muni, VOR/DME RWY 17, Amdt 2
Delta, UT, Delta Muni, VOR RWY 35, Amdt 3
Delta, UT, Delta Muni, Takeoff Minimums and Textual DP, Orig
Bremerton, WA, Bremerton National, ILS OR LOC RWY 19, Amdt 14
Pinedale, WY, Ralph Wenz Field, Takeoff Minimums and Textual DP, Amdt 1
Pinedale, WY, Ralph Wenz Field, RNAV (GPS) RWY 11, Orig
Pinedale, WY, Ralph Wenz Field, RNAV (GPS) RWY 29, Orig
Pinedale, WY, Ralph Wenz Field, NDB RWY 29, Amdt 1

** * * Effective February 16, 2006*

Harrisburg, PA, Harrisburg International, COPTER ILS 128, Orig, CANCELLED
Harrisburg, PA, Harrisburg International, COPTER ILS 308, Orig, CANCELLED

[FR Doc. 05–21582 Filed 10–31–05; 8:45 am]

BILLING CODE 4910–13–P

DEPARTMENT OF HEALTH AND HUMAN SERVICES

Food and Drug Administration

21 CFR Part 520

Oral Dosage Form New Animal Drugs; Ivermectin and Praziquantel Paste

AGENCY: Food and Drug Administration, HHS.

ACTION: Final rule.

SUMMARY: The Food and Drug Administration (FDA) is amending the animal drug regulations to reflect approval of a supplemental new animal drug application (NADA) filed by Virbac AH, Inc. The supplemental NADA provides revised labeling for ivermectin and praziquantel oral paste used in horses for the treatment and control of various internal parasites.

DATES: This rule is effective November 1, 2005.

FOR FURTHER INFORMATION CONTACT: Melanie R. Berson, Center for Veterinary Medicine (HFV–110), Food and Drug Administration, 7500 Standish Pl., Rockville, MD 20855, 301–827–7543, e-mail: *melanie.berson@fda.gov*.

SUPPLEMENTARY INFORMATION: Virbac AH, Inc., 3200 Meacham Blvd., Ft. Worth, TX 76137, filed a supplement to NADA 141–215 for EQUIMAX (ivermectin 1.87%/praziquantel 14.03%) Paste for horses. This supplement amends product labeling to separate parasite life stages in the indications section. The supplemental NADA is approved as of September 16, 2005, and the regulations in 21 CFR 520.1198 are amended to reflect the approval. The basis of approval is discussed in the freedom of information summary. The current regulations for ivermectin and praziquantel paste are also being revised to remove redundant language. These changes are being made to improve the readability of the regulations.

In accordance with the freedom of information provisions of 21 CFR part 20 and 21 CFR 514.11(e)(2)(ii), a summary of safety and effectiveness data and information submitted to support approval of this application may be seen in the Division of Dockets Management (HFA–305), Food and Drug Administration, 5630 Fishers Lane, rm. 1061, Rockville, MD 20852, between 9 a.m. and 4 p.m., Monday through Friday.

The agency has determined under 21 CFR 25.33(d)(1) that this action is of a type that does not individually or cumulatively have a significant effect on the human environment. Therefore, neither an environmental assessment nor an environmental impact statement is required.

This rule does not meet the definition of ''rule'' in 5 U.S.C. 804(3)(A) because it is a rule of ''particular applicability.'' Therefore, it is not subject to the congressional review requirements in 5 U.S.C. 801–808.

List of Subjects in 21 CFR Part 520

Animal drugs.

■ Therefore, under the Federal Food, Drug, and Cosmetic Act and under authority delegated to the Commissioner of Food and Drugs and redelegated to the Center for Veterinary Medicine, 21 CFR part 520 is amended as follows:

PART 520—ORAL DOSAGE FORM NEW ANIMAL DRUGS

■ 1. The authority citation for 21 CFR part 520 continues to read as follows:

Authority: 21 U.S.C. 360b.

■ 2. Section 520.1198 is amended by revising paragraphs (d)(2)(i) and (d)(2)(ii) to read as follows:

§ 520.1198 Ivermectin and praziquantel paste.

* * * * *

(d) * * *

(2) * * *

(i) Tapeworms—*Anoplocephala perfoliata*; Large strongyles (adults)—*Strongylus vulgaris* (also early forms in blood vessels), *S. edentatus* (also tissue stages), *S. equinus*, *Triodontophorus* spp. including *T. brevicauda* and *T. serratus*, and *Craterostomum acuticaudatum*; Small Strongyles (adults, including those resistant to some benzimidazole class compounds)—*Coronocyclus* spp. including *C. coronatus*, *C. labiatus*, and *C. labratus*, *Cyathostomum* spp. including *C. catinatum* and *C. pateratum*, *Cylicocyclus* spp. including *C. insigne*, *C. leptostomum*, *C. nassatus*, and *C. brevicapsulatus*, *Cylicodontophorus* spp., *Cylicostephanus* spp. including *C. calicatus*, *C. goldi*, *C. longibursatus*, and *C. minutus*, and *Petrovinema poculatum*; Small Strongyles—fourth-stage larvae; Pinworms (adults and fourth-stage larvae)—*Oxyuris equi*; Ascarids (adults and third- and fourth-stage larvae)—*Parascaris equorum*; Hairworms (adults)—*Trichostrongylus axei*; Large-mouth Stomach Worms (adults)—*Habronema muscae*; Bots (oral and gastric stages)—*Gasterophilus* spp. including *G. intestinalis* and *G. nasalis*; Lungworms (adults and fourth-stage larvae)—*Dictyocaulus arnfieldi*; Intestinal Threadworms (adults)—*Strongyloides westeri*; Summer Sores caused by Habronema and *Draschia* spp. cutaneous third-stage larvae; Dermatitis caused by neck threadworm microfilariae, *Onchocerca* sp.

(ii) Tapeworms—*Anoplocephala perfoliata*; Large Strongyles (adults)—*Strongylus vulgaris* (also early forms in blood vessels), *S.edentatus* (also tissue stages), *S. equinus*, *Triodontophorus* spp.; Small Strongyles (adults, including those resistant to some benzimidazole class compounds)—*Cyathostomum* spp., *Cylicocyclus* spp., *Cylicostephanus* spp., *Cylicodontophorus* spp.; Small Strongyles—fourth-stage larvae; Pinworms (adults and fourth-stage larvae)—*Oxyuris equi*; Ascarids (adults and third- and fourth-stage larvae)—*Parascaris equorum*; Hairworms (adults)—*Trichostrongylus axei*; Large-mouth Stomach Worms (adults)—*Habronema muscae*; Bots (oral and gastric stages)—*Gasterophilus* spp.; Lungworms (adults and fourth-stage larvae)—*Dictyocaulus arnfieldi*; Intestinal Threadworms (adults)—*Strongyloides westeri*; Summer Sores caused by *Habronema* and *Draschia* spp. cutaneous third-stage larvae; Dermatitis caused by neck threadworm microfilariae, *Onchocerca* sp.

* * * * *

Dated: October 14, 2005.

Steven D. Vaughn,

Director, Office of New Animal Drug Evaluation, Center for Veterinary Medicine.

[FR Doc. 05–21641 Filed 10–31–05; 8:45 am]

BILLING CODE 4160–01–S

DEPARTMENT OF HOMELAND SECURITY

Coast Guard

33 CFR Part 165

[COTP Jacksonville 05–140]

RIN 1625–AA87

Security Zone; Sea Buoy at the Entrance of St. Mary's River to Kings Bay, GA

AGENCY: Coast Guard, DHS.

ACTION: Temporary final rule.

SUMMARY: The Coast Guard is establishing a temporary moving security zone around foreign naval submarines in transit within the area between 12 nautical miles offshore from the baseline, also known as the shoreline, at the mouth of the St. Mary's River to the Kings Bay Naval Submarine Base, Kings Bay, GA. The security zone includes all waters within 500 yards in

any direction of the submarine. The rule prohibits entry into the security zone without the permission of the Captain of the Port (COTP) Jacksonville or his designated representative. Persons or vessels that receive permission to enter the security zone must proceed at a minimum safe speed, must comply with all orders issued by the COTP or his designated representative, and must not proceed any closer than 100 yards, in any direction, to the submarine. This security zone is needed to ensure public safety and to prevent sabotage or terrorist acts against the submarine.

DATES: This rule is effective from 12:01 p.m. on October 20, 2005, until 11:59 p.m. on October 31, 2005.

ADDRESSES: Documents mentioned in this preamble as being available in the docket are part of docket [COTP Jacksonville 05–140] and are available for inspection and copying at Coast Guard Sector Jacksonville Prevention Department, 7820 Arlington Expressway, Suite 400, Jacksonville, Florida, 32211, between 8 a.m. and 4 p.m., Monday through Friday, except Federal holidays.

FOR FURTHER INFORMATION CONTACT: Ensign Kira Peterson at Coast Guard Sector Jacksonville Prevention Department, Florida tel: (904) 232–2640, ext. 108.

SUPPLEMENTARY INFORMATION:

Regulatory Information

We did not publish a notice of proposed rulemaking (NPRM) for this regulation. Under 5 U.S.C. 553 (b)(B), the Coast Guard finds that good cause exists for not publishing a NRPM. Publishing a NPRM, which would incorporate a comment period before a final rule could be issued, and delay the rule's effective date, is contrary to the public interest because immediate action is necessary to protect the public and waters of the United States.

For the same reasons, under 5 U.S.C. 553(d)(3), the Coast Guard finds that good cause exists for making this rule effective less than 30 days after publication in the **Federal Register**. The Coast Guard will issue a broadcast notice to mariners and will place Coast Guard vessels in the vicinity of this zone to advise mariners of the restrictions.

Background and Purpose

This rule is needed to protect foreign navy submarines from damage or injury from sabotage or other subversive acts, accidents or other causes of a similar nature, or to secure the observance of rights and obligations of the United States. Although this rule is effective from 12:01 p.m. on October 20, 2005, until 11:59 p.m. on October 31, 2005, the Coast Guard will only enforce this rule when a foreign navy submarine is transiting within the area between 12 nautical miles offshore from the baseline, also known as the shoreline, at the mouth of the St. Mary's River to the Kings Bay Naval Submarine Base, Kings Bay, GA. Anchoring, mooring, or transiting within this zone is prohibited, unless authorized by the Captain of the Port, Jacksonville, Florida or his designated representative. The temporary security zone encompasses all waters within 500 yards around the foreign naval submarine. Vessels or persons authorized to enter the zone must proceed at a minimum safe speed, must comply with all orders issued by the COTP or his designated representative, and must not proceed any closer than 100 yards, in any direction, to the submarine.

Regulatory Evaluation

This regulation is not a significant regulatory action under section 3(f) of Executive Order 12866, Regulatory Planning and Review, and does not require an assessment of potential cost and benefits under section 6(a)(3) of that Order. The Office of Management and Budget has not reviewed it under the order. It is not ''significant'' under the regulatory policies and procedures of the Department of Homeland Security (DHS) because these regulations will only be in effect for a short period of time and the impact on routine navigation is expected to be minimal.

Small Entities

Under the Regulatory Flexibility Act (5 U.S.C. 601–612), we considered whether this rule would have a significant economic impact on a substantial number of small entities. The term ''small entities'' comprises small businesses, not-for-profit organizations that are independently owned and operated and are not dominate in their field, and governmental jurisdictions with populations of less than 50,000.

The Coast Guard certifies under 5 U.S.C. 605(b) that this rule will not have a significant economic impact upon a substantial number of small entities because the regulation will only be enforced for a short period of time within an 11 day window, during vessel transits, and the impact on routine navigation is expected to be minimal. Vessels may still transit safely around the zone and, upon permission of the Captain of the Port or his designated representative, may transit at minimum safe speed through that portion of the security zone between 200 and 500 yards from the submarine.

Assistance for Small Entities

Under section 213(a) of the Small Business Regulatory Enforcement Fairness Act of 1996 (Public Law 204–121), we offer to assist small entities in understanding the rule so that they can better evaluate its effects on them and participate in the rulemaking process. If the rule will affect your small business, organization, or government jurisdiction and you have questions concerning its provisions or options for compliance, please contact the person listed under **FOR FURTHER INFORMATION CONTACT** for assistance in understanding this rule.

Small businesses may send comments on the actions of Federal employees who enforce, or otherwise determine compliance with, Federal regulations to the Small Business and Agriculture Regulatory Enforcement Ombudsman and the Regional Small Business Regulatory Fairness Boards. The Ombudsman evaluates these actions annually and rates each agency's responsiveness to small business. If you wish to comment on actions by employees of the Coast Guard, call 1–888–REG–FAIR (1–888–734–3247).

Collection of Information

This rule calls for no new collection of information under the Paperwork Reduction Act of 1995 (44 U.S.C. 3501–3520).

Federalism

A rule has implications for federalism under Executive Order 13132, Federalism, if it has a substantial direct effect on State or local governments and would either preempt State law or impose a substantial direct cost of compliance on them. We have analyzed this rule under that Order and have determined that it does not have implications for federalism.

Unfunded Mandates Reform Act

The Unfunded Mandates Reform Act of 1995 (2 U.S.C. 1531–1538) requires Federal agencies to assess the effects of their discretionary regulatory actions. In particular, the Act addresses actions that may result in the expenditure by State, local, or tribal government, in the aggregate, or by the private sector of $100,000,000 or more in any one year. Although this rule will not result in such an expenditure, we do discuss the effects of this rule elsewhere in this preamble.

Taking of Private Property

This rule will not affect a taking of private property or otherwise have

taking implications under Executive Order 12630, Governmental Actions and Interference with Constitutionally Protected Property Rights.

Civil Justice Reform

This rule meets applicable standards in sections 3(a) and 3(b)(2) of Executive Order 12988, Civil Justice Reform, to minimize litigation, eliminate ambiguity, and reduce burden.

Protection of Children

We have analyzed this rule under Executive Order 13045, Protection of Children from Environmental Health Risks and Safety Risks. This rule is not an economically significant rule and does not create an environmental risk to health or risk to safety that may disproportionately affect children.

Indian Tribal Governments

This rule does not have tribal implications under Executive Order 13175, Consultation and Coordination with Indian Tribal Governments, because it does not have a substantial direct effect on one or more Indian tribes, on the relationship between the Federal Government and Indian tribes, or on the distribution of power and responsibilities between the Federal Government and Indian tribes.

Energy Effects

We have analyzed this rule under Executive Order 13211, Actions Concerning Regulations That Significantly Affect Energy Supply, Distribution, or Use. We have determined that it is not a ''significant energy action'' under that order because it is not a ''significant regulatory action'' under Executive Order 12866 and is not likely to have significant adverse effect on the supply, distribution, or use of energy. The Administrator of the Office of Information and Regulatory Affairs has not designated it as a significant energy action. Therefore, it does not require a Statement of Energy Effects under Executive Order 13211.

Technical Standards

The National Technology Transfer and Advancement Act (NTTAA) (15 U.S.C. 272 note) directs agencies to use voluntary consensus standards in their regulatory activities unless the agency provides Congress, through the Office of Management and Budget, with an explanation of why using these standards would be inconsistent with applicable law or otherwise impractical. Voluntary consensus standards are technical standards (*e.g.*, specifications of materials, performance, design, or operation; test methods; sampling procedures; and related management systems practices) that are developed or adopted by voluntary consensus standards bodies.

This rule does not use technical standards. Therefore, we did not consider the use of voluntary consensus standards.

Environment

We have analyzed this rule under Commandant Instruction M16475.lD, which guides the Coast Guard in complying with the National Environmental Policy Act of 1969 (NEPA)(42 U.S.C. 4321–4370f), and have concluded that there are no factors in this case that would limit the use of a categorical exclusion under section 2.B.2 of the Instruction. Therefore, this rule is categorically excluded, under figure 2–1, paragraph (34)(g), of the Instruction, from further environmental documentation. Under figure 2–1, paragraph (34)(g), of the Instruction, an ''Environmental Analysis Check List'' and a ''Categorical Exclusion Determination'' are not required for this rule.

List of Subjects in 33 CFR Part 165

Harbors, Marine safety, Navigation (water), Reporting and recordkeeping requirements, Security measures, Waterways.

■ For the reasons discussed in the preamble, the Coast Guard amends 33 CFR part 165, as follows:

PART 165—REGULATED NAVIGATION AREAS AND LIMITED ACCESS AREAS

■ 1. The authority citation for part 165 continues to read as follows:

Authority: 33 U.S.C. 1226, 1231; 46 U.S.C. Chapter 701; 50 U.S.C. 191, 195; 33 CFR 1.05–1(g), 6.04–1, 6.04–6, and 160.5; Pub. L. 207–295, 116 Stat. 2064; Department of Homeland Security Delegation No. 0170.1.

■ 2. A new temporary § 165.T07–140 is added to read as follows:

§ 165.T07–140 Security Zone; Sea buoy at the entrance of St. Mary's River to Kings Bay, GA.

(a) *Regulated area.* The Coast Guard is establishing a temporary moving security zone around foreign naval submarines when they are within a regulated area 12 nautical miles offshore from the baseline, also known as the shoreline, at the mouth of the St. Mary's River to the Kings Bay Naval Submarine Base, Kings Bay, GA. The temporary security zone encompasses all waters within 500 yards in any direction around a foreign navy submarine transiting within the regulated area.

(b) *Definitions.* The following definitions apply to this section:

Designated representatives means Coast Guard Patrol Commanders including Coast Guard coxswains, petty officers and other officers operating Coast Guard vessels, and federal, state, and local officers designated by or assisting the Captain of the Port (COTP), Jacksonville, Florida, in the enforcement of the regulated navigation areas and security zones.

Minimum Safe Speed means the speed at which a vessel proceeds when it is fully off plane, completely settled in the water and not creating excessive wake. Due to the different speeds at which vessels of different sizes and configurations may travel while in compliance with this definition, no specific speed is assigned to minimum safe speed. In no instance should minimum safe speed be interpreted as a speed less than that required for a particular vessel to maintain steerageway. A vessel is not proceeding at minimum safe speed if it is:

(1) On a plane;

(2) In the process of coming up onto or coming off a plane; or

(3) Creating an excessive wake.

(c) *Regulations.* In accordance with the general regulations in § 165.33 of this part, anchoring, mooring or transiting in the regulated area is prohibited unless authorized by the Coast Guard Captain of the Port Jacksonville, FL or his designated representative. Persons or vessels that receive permission to enter the security zone must proceed at a minimum safe speed, must comply with all orders issued by the COTP or his designated representative, and must not proceed any closer than 200 yards, in any direction, to the submarine.

(d) *Dates.* This section is effective from 12:01 p.m. on October 20, 2005, until 11:59 p.m. on October 31, 2005.

Dated: October 20, 2005.

David L. Lersch,

Captain, U.S. Coast Guard, Captain of the Port Jacksonville.

[FR Doc. 05–21721 Filed 10–31–05; 8:45 am]

BILLING CODE 4910–15–P

DEPARTMENT OF HOMELAND SECURITY

Coast Guard

33 CFR Part 165

[CGD13–05–038]

RIN 1625–AA87

Security Zone; Protection of Military Cargo, Captain of the Port Zone Puget Sound, WA

AGENCY: Coast Guard, DHS.

ACTION: Notice of enforcement.

SUMMARY: The Captain of the Port Puget Sound will begin enforcing the Budd Inlet security zone in West Bay, Olympia, Washington on Thursday, October 27, 2005, at 8 a.m. Pacific Daylight Time. The security zone provides for the security of Department of Defense assets and military cargo in the navigable waters of Puget Sound and adjacent waters. The security zone will be enforced until Tuesday, November 1, 2005, at 11:59 p.m. Pacific standard time.

DATES: The Budd Inlet security zone set forth in 33 CFR 165.1321 will be enforced from Thursday, October 27, 2005, at 8 a.m. Pacific daylight time to Tuesday, November 1, 2005, at 11:59 p.m. Pacific standard time, at which time enforcement will be suspended.

FOR FURTHER INFORMATION CONTACT: Captain of the Port Puget Sound, 1519 Alaskan Way South, Seattle, WA 98134 at (206) 217–6200 or (800) 688–6664 to obtain information concerning enforcement of this rule.

SUPPLEMENTARY INFORMATION: On August 27, 2004, the Coast Guard published a final rule (69 FR 52603) establishing regulations, in 33 CFR 165.1321, for the security of Department of Defense assets and military cargo in the navigable waters of Puget Sound and adjacent waters. On December 10, 2004, the Coast Guard published a final rule (69 FR 71709), which amended 33 CFR 165.1321 by adding Budd Inlet, Olympia, WA as a permanent security zone. These security zones provide for the regulation of vessel traffic in the vicinity of military cargo loading facilities in the navigable waters of the United States. These security zones also exclude persons and vessels from the immediate vicinity of these facilities during military cargo loading and unloading operations. In addition, the regulation establishes requirements for all vessels to obtain permission of the COTP or the COTP's designated representative, including the Vessel Traffic Service (VTS) aspect of Sector Seattle to enter, move within, or exit these security zones when they are enforced. Entry into these zones is prohibited unless otherwise exempted or excluded under 33 CFR 165.1321 or unless authorized by the Captain of the Port or his designee. The Captain of the Port Puget Sound will begin enforcing the Budd Inlet security zone established by 33 CFR 165.1321 on Thursday, October 27, 2005, at 8 a.m. Pacific daylight time. The security zone will be enforced until Tuesday, November 1, 2005, at 11:59 p.m. Pacific standard time. All persons and vessels are authorized to enter, move within, and exit the security zone on or after Tuesday, November 1, 2005, at 11:59 p.m. Pacific standard time unless a new notice of enforcement is issued before then.

Dated: October 21, 2005.

Stephen P. Metruck,

Captain, U.S. Coast Guard, Captain of the Port, Puget Sound.

[FR Doc. 05–21720 Filed 10–31–05; 8:45 am]

BILLING CODE 4910–15–P

ENVIRONMENTAL PROTECTION AGENCY

40 CFR Part 52

[RO4–OAR–2005–TN–0006–200519(a); FRL–7990–3]

Approval and Promulgation of Implementation Plans; Tennessee: Nashville Area Second 10-Year Maintenance Plan for the 1-Hour Ozone National Ambient Air Quality Standard

AGENCY: Environmental Protection Agency (EPA).

ACTION: Direct final rule.

SUMMARY: The EPA is approving a revision to the Tennessee State Implementation Plan (SIP) submitted in final form on August 10, 2005. The SIP revision provides the second 10-year maintenance plan for the Nashville (Middle Tennessee) 1-hour ozone maintenance area (Nashville Area), which is composed of the following five counties: Davidson, Rutherford, Sumner, Williamson, and Wilson. The Nashville Area is still required to fulfill obligations under the 1-hour ozone national ambient air quality standard (NAAQS), because EPA has deferred the effective date of the designation for the Nashville Area under the newer 8-hour ozone NAAQS due to participation in an Early Action Compact. EPA is approving this SIP revision because it satisfies the requirement of the Clean Air Act (CAA) for the second 10-year maintenance plan for the Nashville Area.

In addition, in this rulemaking, EPA is providing information on its transportation conformity adequacy determination for new motor vehicle emission budgets (MVEBs) for the year 2016 that are contained in the second 10-year 1-hour ozone maintenance plan for the Nashville Area. EPA determined that the 2016 MVEBs are adequate through a previous action. EPA is also approving the 2016 MVEBs in this action.

DATES: This direct final rule is effective January 3, 2006, without further notice, unless EPA receives adverse comment by December 1, 2005. If adverse comment is received, EPA will publish a timely withdrawal of the direct final rule in the **Federal Register** and inform the public that the rule will not take effect.

ADDRESSES: Submit your comments, identified by Regional Material in EDocket (RME) ID No. ''RO4–OAR–2005–TN–0006–200519'' by one of the following methods:

1. Federal eRulemaking Portal: *http://www.regulations.gov.* Follow the on-line instruction for submitting comments.
2. Agency Web site: *http://docket.epa.gov/rmepub/RME,* EPA's electronic public docket and comment system is EPA's preferred method for receiving comments. Once in the system, select ''quick search,'' then key in the appropriate RME Docket identification number. Follow the on-line instructions for submitting comments:
3. E-mail: *hoffman.annemarie@epa.gov.*
4. Fax: (404) 562–9019.
5. Mail: ''RO4–OAR–2005–TN–0006'' Regulatory Development Section, Air Planning Branch, Air Pesticides and Toxics Management Division, U.S. Environmental Protection Agency, Region 4, 61 Forsyth Street, SW., Atlanta, Georgia 30303–8960.
6. Hand Delivery or Courier, Deliver your comments to Anne Marie Hoffman, Regulatory Development Section, Air Planning Branch, Air, Pesticides and Toxics Management Division, U.S. Environmental Protection Agency, Region 4, 61 Forsyth Street, SW., Atlanta, Georgia 30303–8960, such deliveries are only accepted during the Regional Office's normal hours of operation. The Regional office's official hours of business are Monday through Friday, 8:30 to 4:30, excluding federal holidays.

Instructions: Direct your comments to RME ID No. ''RO4–OAR–2005–TN–0006.'' EPA's policy is that all comments received will be included in the public docket without change and may be made available online at *http://docket.epa.gov/rmepub,* including any personal information provided, unless the comment includes information claimed to be Confidential Business Information (CBI) or other information whose disclosure is restricted by statute. Do not submit information that you consider to be CBI or otherwise protected through RME, regulations.gov, or e-mail. The EPA RME website and the federal regulations.gov website are ''anonymous access'' systems, which means EPA will not know your identity or contact information unless you provide it in the body of your comment. If you send an e-mail comment directly to EPA without going through RME or regulations.gov, your e-mail address will be automatically captured and included as part of the comment that is placed in the public docket and made available on the Internet. If you submit an electronic comment, EPA recommends that you include your name and contact information in the body of your comment and with any disk or CD–ROM you submit. If EPA cannot read your comment due to technical difficulties and cannot contact you for clarification, EPA may not be able to consider your comment. Electronic files should avoid the use of special characters, any form of encryption, and be free of any defects or viruses.

Docket: All documents in the electronic docket are listed in the RME index at *http://docket.epa.gov/rmepub.* Although listed in the index, some information is not publicly available, i.e., CBI or other information whose disclosure is restricted by statute. Certain other material, such as copyrighted material, is not placed on the Internet and will be publicly available only in hard copy form. Publicly available docket material are available either electronically in RME or in hard copy at the Regulatory Development Section, Air Planning Branch, Air, Pesticides and Toxics Management Division, U.S. Environmental Protection Agency Region 4, 61 Forsyth Street, SW., Atlanta, Georgia 30303–8960. EPA requests that if at all possible, you contact the person listed in the **FOR FURTHER INFORMATION CONTACT** section to schedule your inspection. The Regional Office's official hours of business are Monday through Friday, 8:30 to 4:30, excluding federal holidays.

FOR FURTHER INFORMATION CONTACT: Anne Marie Hoffman, Regulatory Development Section, Air Planning Branch, Air, Pesticides and Toxics Management Division, U.S. Environmental Protection Agency, Region 4, 61 Forsyth Street, SW., Atlanta, Georgia, 30303–8960, Phone (404) 562–9074. E-mail: *hoffman.annemarie@epa.gov.*

SUPPLEMENTARY INFORMATION:

Table of Contents

I. What Is the Background for This Action?
II. What Is EPA's Analysis of the Nashville Area's Second 10-Year Maintenance Plan?
III. What Is EPA's Action on the Nashville Area's Second 10-Year Maintenance Plan?
IV. What Is an Adequacy Determination and What Is EPA's Adequacy Determination for the Nashville Area's New MVEBs for the Year 2016?
V. Statutory and Executive Order Reviews

I. What Is the Background for This Action?

In 1996, based on measured air quality data, the Nashville Area was able to demonstrate attainment with the 1-hour ozone National Ambient Air Quality Standard (NAAQS) due to numerous control measures implemented in the Nashville Area. As a result of the measured air quality data, Tennessee petitioned EPA for redesignation. In 1996, EPA redesignated the Nashville Area to attainment based on the measured air quality data and a 10-year maintenance plan submitted for the Nashville Area. The air quality maintenance plan is a requirement of the 1990 CAA amendments for nonattainment areas that come into compliance with the NAAQS to assure their continued maintenance of that standard. Eight years after redesignation to attainment, section 175A(b) of the CAA requires the state to submit a revised maintenance plan which demonstrates that attainment will continue to be maintained for the ten years following the initial ten-year period (this is known as the second 10-year plan). The second 10-year plan updates the original 10-year 1-hour ozone maintenance plan for the next 10-year period. The maintenance plan sets out the steps the area would take to maintain attainment with the 1-hour ozone NAAQS. Tennessee was required to submit the second 10-year plan for the Nashville Area demonstrating that it would continue to attain the 1-hour ozone NAAQS through 2016.

The Nashville Area is still required to fulfill requirements under the 1-hour ozone NAAQS due to its participation in an Early Action Compact (EAC). The effective date of the revocation of the 1-hour ozone NAAQS is one year after the effective date of the designations for the 8-hour ozone standard as explained in EPA's April 30, 2004, final rule (69 FR 23951). For areas participating in an EAC, the effective date for designations for the 8-hour ozone NAAQS was deferred until December 31, 2006, in a final action published by EPA on August 29, 2005 (70 FR 50988). Therefore, the 1-hour ozone NAAQS is not yet revoked for the Nashville Area and other areas participating in an EAC, because the effective date for designations for the 8-hour ozone NAAQS in EAC areas has been deferred. For more information, please see EPA's Web site on EACs at: *http://www.epa.gov/air/eac/index.html.*

The original 10-year maintenance plan for the Nashville Area established MVEBs for the year 2006. The 2006 MVEBs are 53.17 tons per day (tpd) for volatile organic compounds (VOC) and 96.60 tpd for nitrogen oxides (NO_X). These MVEBs are currently being used by the transportation partners to demonstrate transportation conformity. Additionally, through this rulemaking, EPA is providing information on the status of its transportation conformity adequacy determination for new MVEBs for the year 2016 that are contained in the second 10-year plan for the Nashville Area. The adequacy comment period for the 2016 MVEBs began on June 9, 2005, with EPA's posting of the availability of this submittal on EPA's Adequacy Web site (at *http://www.epa.gov/otaq/transp/conform/adequacy.htm*). The adequacy comment period for these MVEBs closed on July 11, 2005. No request for, or adverse comments on this submittal were received during EPA's adequacy comment period. EPA determined that the 2016 MVEBs are adequate through a separate action on September 16, 2005, (70 FR 2005). Please see section IV of this rulemaking for further explanation of this process.

II. What Is EPA's Analysis of the Nashville Area's Second 10-Year Maintenance Plan?

On August 10, 2005, the State of Tennessee, through the Tennessee Department of Environment and Conservation (TDEC), submitted a SIP revision to EPA that provided for the second 10-year plan for the Nashville Area as required by section 175A(b) of the CAA. This second 10-year plan for the Nashville Area includes a new ozone precursor emission inventory for 2002 for the Nashville Area which reflects emission controls applicable for

the Nashville Area, and actual and projected emissions for 2002, 2006, 2009, 2012 and 2016. The SIP revision also establishes new MVEBs for 2016 for the Nashville Area.

The emission reduction measures for ozone precursor emissions implemented in the Nashville Area from 1996 to 2006, and measures that are projected to occur between 2006 and 2016, are accounted for in the 2002 emission inventory and projected emissions estimates. The following two tables provide emissions data and projections, calculated using MOBILE6.2, for the ozone precursors, VOC and NO_X.

TABLE 1.—NASHVILLE 1-HOUR OZONE AREA

[Emission inventory and projected VOC emissions (2002–2016)]

	Area	Non-road mobile	On-road mobile	Point	Total	Safety margin based on 2002 emissions
2002	80.63	27.53	51.21	19.97	179.34	n/a
2006	85.56	24.01	37.28	13.05	159.90	19.44
2009	89.03	20.30	31.03	14.02	154.38	24.96
2012	92.75	18.45	24.91	15.09	151.20	28.14
2016	98.87	16.77	19.18	17.02	151.84	27.50

TABLE 2.—NASHVILLE 1-HOUR OZONE AREA

[Emission inventory and projected NO_X emissions (2002–2016)]

	Area	Non-road mobile	On-road mobile	Point	Total	Safety margin based on 2002 emissions
2002	21.13	47.85	136.00	53.29	258.27	n/a
2006	23.48	44.74	97.89	61.01	227.11	31.15
2009	24.45	41.18	77.65	61.57	204.85	53.42
2012	25.69	37.71	56.02	64.21	183.63	74.64
2016	26.53	32.97	36.01	65.21	160.72	97.55

The attainment level of emissions is the level of emissions during one of the years in which the area met the NAAQS. The Nashville Area attained the 1-hour ozone NAAQS based on air quality data for the 2000–2002 time period. Therefore, in this SIP revision, the emissions from the year 2002 are used to calculate a new attainment emissions level for the Nashville Area. The emissions from point, area, nonroad, and mobile sources in 2002 equal 179.34 tpd of VOC for the entire Nashville Area. Projected VOC emissions to the year 2016 equal 151.84 tpd of VOC.

The safety margin is the difference between the attainment level of emissions (from all sources) and the projected level of emissions (from all sources) in the maintenance plan. The safety margin is for the entire Nashville Area and is not sub-allocated by county. The safety margin credit, or a portion thereof, can be allocated to the transportation sector, however, the total emission level must stay below the attainment level. The safety margin for VOC is the difference between these amounts or, in this case, 27.50 tpd for 2016. By this same method, 97.55 tpd (258.27 tpd less 160.72 tpd) is the safety margin for NO_X for 2016. The emissions are projected to maintain the Nashville Area's air quality consistent with the NAAQS.

Maintenance plans and other control strategy SIPs create MVEBs for criteria pollutants and/or their precursors to address pollution from cars and trucks. The MVEB is the portion of the total allowable emissions that is allocated to highway and transit vehicle use and emissions. The MVEB serves as a ceiling on emissions from an area's planned transportation system. In this SIP revision, the Nashville Area used MOBILE6.2 to establish MVEBs for VOC and NO_X for the year 2016. In a previous action on September 16, 2005, (70 FR 54738) EPA determined that the new 2016 MVEBs are adequate for the Nashville Area. These MVEBs are listed in Tables 3.1 and 3.2.

TABLE 3.1.—2016 MVEB WITH SAFETY MARGIN INCLUDED

	2016 safety margin	10% of safety margin	2016 estimated on-road mobile emissions	2016 MVEB with safety margin
VOC	27.50	2.75	19.18	21.93
NO_X	97.54	9.75	36.01	45.76

The MVEBs presented in Table 3.2 are directly reflective of the combined onroad (or ''highway'') emissions for the Nashville Area for VOC and NO_X, plus allocation from the available safety margin. In summary, the MVEBs for the Nashville Area that the transportation partners must use are provided in the table below.

TABLE 3.2.—2006 AND 2016 MVEBS

	2006	2016
VOC	53.17	21.93
NO_X	96.60	45.76

III. What Is EPA's Action on the Nashville Area's Second 10-Year Maintenance Plan?

EPA is approving Tennessee's SIP revision pertaining to the Nashville Area's second 10-year plan, including the new 2016 MVEBs for VOC and NO_X.

IV. What Is an Adequacy Determination and What Is EPA's Adequacy Determination for the Nashville Area's New MVEB for the Year 2016?

At various times under the CAA, states are required to submit control strategy SIP revisions and maintenance plans for ozone areas. These control strategy SIP submittals (*e.g.*, reasonable further progress SIP submittals and attainment demonstration SIP submittals) and maintenance plans create MVEBs for criteria pollutants and/or their precursors to address pollution from cars and trucks. Per 40 CFR part 93, a MVEB is established for the last year of the maintenance plan. The MVEB is the portion of the total allowable emissions in the maintenance plan that is allocated to highway and transit vehicle use and emissions. The MVEB serves as a ceiling on emissions from an area's planned transportation system. The MVEB concept is further explained in the preamble to the November 24, 1993, transportation conformity rule (58 FR 62188). The preamble also describes how to establish and revise MVEBs in the SIP.

Under section 176(c) of the CAA, new transportation projects, such as the construction of new highways, must ''conform'' to (*e.g.* be consistent with) the part of the State's air quality plan that addresses pollution from cars and trucks. ''Conformity'' to the SIP means that transportation activities will not cause new air quality violations, worsen existing violations, or delay timely attainment of the NAAQS. Under the transportation conformity rule, at 40 CFR part 93, projected emissions from transportation plans and programs must be equal to or less than MVEBs for the area. If a transportation plan does not ''conform,'' most new projects that would expand the capacity of roadways cannot go forward. Regulations at 40 CFR part 93 set forth EPA policy, criteria and procedures for demonstrating and assuring conformity of such transportation activities to a SIP.

Until MVEBs in a SIP submittal are approved by EPA, they cannot be used for transportation conformity purposes unless EPA makes an affirmative finding that MVEBs contained therein are ''adequate.'' Once EPA affirmatively finds the submitted MVEBs adequate for transportation conformity purposes, those MVEBs can be used by the State and Federal agencies in determining whether proposed transportation projects ''conform'' to the SIP even though the approval of the SIP revision containing those MVEBs has not yet been finalized. EPA's substantive criteria for determining ''adequacy'' of MVEBs in submitted SIPs are set out in EPA's Transportation Conformity Rule at 40 CFR 93.118(e)(4).

In a letter dated August 16, 2005, to Barry Stephens, Director of the Air Pollution Control Division of TDEC, EPA informed the State of its intention to find the new 2016 MVEBs adequate for transportation conformity purposes. Subsequently, in a Final **Federal Register** notice dated September 16, 2005, (70 FR 54738) EPA found the Nashville Area's 2016 MVEBs adequate. These MVEBs meet the adequacy criteria contained in the Transportation Conformity Rule. Both the 2006 and 2016 MVEBs for the Nashville Area are currently being used for transportation conformity determinations. For transportation plan analysis years that involve the year 2015 or before, the applicable budget for the purposes of conducting transportation conformity analysis will be the 2006 MVEBs for VOC of 53.17 tpd and for NO_X of 96.60 tpd for the Nashville Area. For transportation plan analysis years that involve the year 2016 or beyond, the applicable budget for the purposes of conducting transportation conformity analysis will be the 2016 MVEB for VOC of 19.18 tpd and for NO_X of 36.01 tpd for the Nashville Area.

V. Statutory and Executive Order Reviews

Under Executive Order 12866 (58 FR 51735, October 4, 1993), this action is not a ''significant regulatory action'' and therefore is not subject to review by the Office of Management and Budget. For this reason, this action is also not subject to Executive Order 13211, ''Actions Concerning Regulations That Significantly Affect Energy Supply, Distribution, or Use'' (66 FR 28355, May 22, 2001). This action merely approves state law as meeting Federal requirements and imposes no additional requirements beyond those imposed by state law. Accordingly, the Administrator certifies that this rule will not have a significant economic impact on a substantial number of small entities under the Regulatory Flexibility Act (5 U.S.C. 601 *et seq.*). Because this rule approves pre-existing requirements under state law and does not impose any additional enforceable duty beyond that required by state law, it does not contain any unfunded mandate or significantly or uniquely affect small governments, as described in the Unfunded Mandates Reform Act of 1995 (Pub. L. 104–4).

This rule also does not have tribal implications because it will not have a substantial direct effect on one or more Indian tribes, on the relationship between the Federal Government and Indian tribes, or on the distribution of power and responsibilities between the Federal Government and Indian tribes, as specified by Executive Order 13175 (65 FR 67249, November 9, 2000). This action also does not have Federalism implications because it does not have substantial direct effects on the states, on the relationship between the national government and the states, or on the distribution of power and responsibilities among the various levels of government, as specified in Executive Order 13132 (64 FR 43255, August 10, 1999). This action merely approves a state rule implementing a Federal standard, and does not alter the relationship or the distribution of power and responsibilities established in the Clean Air Act. This rule also is not subject to Executive Order 13045 ''Protection of Children from Environmental Health Risks and Safety Risks'' (62 FR 19885, April 23, 1997), because it is not economically significant.

In reviewing SIP submissions, EPA's role is to approve state choices, provided that they meet the criteria of the Clean Air Act. In this context, in the absence of a prior existing requirement for the state to use voluntary consensus standards (VCS), EPA has no authority to disapprove a SIP submission for failure to use VCS. It would thus be inconsistent with applicable law for EPA, when it reviews a SIP submission, to use VCS in place of a SIP submission that otherwise satisfies the provisions of the Clean Air Act. Thus, the requirements of section 12(d) of the National Technology Transfer and Advancement Act of 1995 (15 U.S.C. 272 note) do not apply. This rule does not impose an information collection burden under the provisions of the Paperwork Reduction Act of 1995 (44 U.S.C. 3501 *et seq.*).

The Congressional Review Act, 5 U.S.C. 801 *et seq.*, as added by the Small Business Regulatory Enforcement Fairness Act of 1996, generally provides that before a rule may take effect, the agency promulgating the rule must submit a rule report, which includes a copy of the rule, to each House of the Congress and to the Comptroller General of the United States. EPA will submit a report containing this rule and other required information to the U.S. Senate,

the U.S. House of Representatives, and the Comptroller General of the United States prior to publication of the rule in the **Federal Register**. A major rule cannot take effect until 60 days after it is published in the **Federal Register**. This action is not a ''major rule'' as defined by 5 U.S.C. 804(2).

Under section 307(b)(1) of the Clean Air Act, petitions for judicial review of this action must be filed in the United States Court of Appeals for the appropriate circuit by January 3, 2006. Filing a petition for reconsideration by the Administrator of this final rule does not affect the finality of this rule for the purposes of judicial review nor does it extend the time within which a petition for judicial review may be filed, and shall not postpone the effectiveness of such rule or action. This action may not be challenged later in proceedings to enforce its requirements. (See section 307(b)(2).

List of Subjects in 40 CFR Part 52

Environmental protection, Air pollution control, Intergovernmental relations, Nitrogen dioxide, Ozone, Volatile organic compounds.

Dated: October 17, 2005.

A. Stanley Meiburg,

Acting Regional Administrator, Region 4.

■ 40 CFR part 52 is amended as follows:

PART 52—[AMENDED]

■ 1. The authority citation for part 52 continues to read as follows:

Authority: 42 U.S.C. 7401 *et seq.*

Subpart RR—Tennessee

■ 2. Section 52.2220(e) is amended by adding a new entry at the end of the table for ''Nashville 1-Hour Ozone Second 10-Year Maintenance Plan'' to read as follows:

§ 52.2220 Identification of plan.

(e) * * *

EPA APPROVED TENNESSEE NON-REGULATORY PROVISIONS

Name of nonregulatory SIP provision	Applicable geographic or nonattainment area	State effective date	EPA approval date	Explanation
* *	*	*	* *	*
Nashville 1-Hour Ozone Second 10-Year Maintenance Plan.	Nashville	August 10, 2005	November 1, 2005 [Insert first page of publication].	

[FR Doc. 05–21528 Filed 10–31–05; 8:45 am]

BILLING CODE 6560–50–P

ENVIRONMENTAL PROTECTION AGENCY

40 CFR Part 52

[R03–OAR–2005–PA–0013; FRL–7992–2]

Approval and Promulgation of Air Quality Implementation Plans; Pennsylvania; VOC and NO_X RACT Determinations for Seven Individual Sources

AGENCY: Environmental Protection Agency (EPA).

ACTION: Final rule.

SUMMARY: EPA is taking final action to approve revisions to the Commonwealth of Pennsylvania State Implementation Plan (SIP). The revisions were submitted by the Pennsylvania Department of Environmental Protection (PADEP) to establish and require reasonably available control technology (RACT) for seven major sources of volatile organic compounds (VOC) and nitrogen oxides (NO_X) pursuant to the Commonwealth of Pennsylvania's (Pennsylvania's or the Commonwealth's) SIP-approved generic RACT regulations. EPA is approving these revisions in accordance with the Clean Air Act (CAA).

DATES: This rule is effective on December 1, 2005.

ADDRESSES: EPA has established a docket for this action under Regional Material in EDocket (RME) ID Number R03–OAR–2005–PA–0013. All documents in the docket are listed in the RME index at *http://docket.epa.gov/rmepub/*. Once in the system, select ''quick search,'' then key in the appropriate RME identification number. Although listed in the electronic docket, some information is not publicly available, i.e., confidential business information (CBI) or other information whose disclosure is restricted by statute. Certain other material, such as copyrighted material, is not placed on the Internet and will be publicly available only in hard copy form. Publicly available docket materials are available either electronically in RME or in hard copy for public inspection during normal business hours at the Air Protection Division, U.S. Environmental Protection Agency, Region III, 1650 Arch Street, Philadelphia, Pennsylvania 19103. Copies of the State submittal are available at the Pennsylvania Department of Environmental Protection, Bureau of Air Quality, P.O. Box 8468, 400 Market Street, Harrisburg, Pennsylvania 17105.

FOR FURTHER INFORMATION CONTACT: Amy Caprio, (215) 814–2156, or by e-mail at *caprio.amy@epa.gov*.

SUPPLEMENTARY INFORMATION:

I. Background

On June 10, 2005 (70 FR 33850) and June 16, 2005 (70 FR 35162), EPA published a notice of proposed rulemaking (NPR) and a correction for the Commonwealth of Pennsylvania. The NPR proposed approval of formal SIP revisions submitted by Pennsylvania on January 27, 2005. The correction addresses the location of the NPR publication in the **Federal Register**. These SIP revisions consist of source-specific operating permits and/or plan approvals issued by PADEP to establish and require RACT pursuant to the Commonwealth's SIP-approved generic RACT regulations. The following table identifies the sources and the individual plan approvals (PAs) and operating permits (OPs) which are the subject of this rulemaking.

PENNSYLVANIA—VOC AND NO_X RACT DETERMINATIONS FOR INDIVIDUAL SOURCES

Source's Name	County	Plan approval (PA #) operating permit (OP #)	Source type	"Major Source" pollutant
Molded Fiber Glass, Union City	Erie	OP 25–035	Spray Booths; Molding Machines	VOC.
SKF, USA, Incorporated	York	67–02010A	Dip Tank; Spray Tanks	VOC.
Erie Forge and Steel Incorporated	Erie	OP 25–924	Furnaces; Boilers; Preheaters	NO_X.
OSRAM SYLVANIA Products, Inc.	Tioga	OP–59–0007	Gas Furnace; Dryers; Boilers; Hot Water Heaters; Forehearths.	NO_X.
Owens-Brockway Glass Container	Jefferson	OP–33–002	Refiners; Boilers; Furnaces; Forehearths	NO_X.
Texas Eastern Transmission Corporation	Indiana	32–000–230	Turbines; Generators	NO_X.
Johnstown America Corporation	Cambria	11–000–288	Solvent Cleaning; Natural Gas Combustion Sources.	VOC.

An explanation of the CAA's RACT requirements as they apply to the Commonwealth and EPA's rationale for approving these SIP revisions were provided in the NPR and will not be restated here.

Timely adverse comments were submitted on EPA's June 10, 2005 NPR. A summary of those comments and EPA's responses are provided in Section II of this document.

II. Summary of Public Comments and EPA Responses

Comment: On June 19, 2005, a citizen submitted adverse comments on EPA's DFR notice approving PADEP's VOC and NO_X RACT determinations for seven individual sources. The commenter states their opposition and objection to the rulemaking, based on the belief that too much pollution is allowed to blow east toward New Jersey from Pennsylvania. The commenter also states that the amount of pollution needs to be reduced.

Response: The rulemaking at issue is limited in scope and addresses the CAA section 182(b)(1) RACT requirements for sources located in the ozone nonattainment area classified as moderate or above. The commenter did not comment specifically on the RACT determinations for the seven individual sources and did not submit any supporting technical data or information to support that the standards for the seven individual sources do not represent RACT. Rather, the commenter makes broad statements alleging: (1) that the regulations should be more stringent in Pennsylvania than those required under the Act, and (2) that the amount of pollution needs to be reduced. These comments are not ''significant comments'' that to which EPA needs to respond. *Whitman* v. *American Trucking Ass'n.*, 531 U.S. 457, n.2 at 471 (2001) (Under the CAA, EPA need only respond to significant comments, *i.e.,* comments relevant to EPA's decision). Mere ''assertions that in the opinions of the commenter the Agency got it wrong,'' are not relevant comments warranting a response. *International Fabricare Inst.* v. *EPA*, 972 F.2d 384, 391 (D.C. Cir. 1992). As to the first comment, that the rules in Pennsylvania should be more stringent than required under the Act, EPA has no authority to mandate that a State regulate more stringently than required. Under the CAA's bifurcated scheme, the State is responsible for choosing how a source must be regulated for purposes of attaining the National Ambient Air Quality Standards (NAAQS) and EPA's role is limited in reviewing the State's choice to ensure it meets the minimum statutory requirements. Here, as is clear from the commenter's two points, the commenter is not claiming that the regulations do not meet the statutory minimum, but rather that the statute does not require enough. EPA has no authority to modify the statute, as requested by the commenter nor does EPA have authority to require the State to regulate more stringently than required by the statute. The CAA is based upon ''cooperative federalism,'' which contemplates that each State will develop its own SIP, and that States retain a large degree of flexibility in choosing which sources to control and to what degree. EPA must approve a State's plan if it meets the ''minimum requirements of the CAA. *Union Elec. Co.* v. *EPA*, 427 U.S. 246, 264–266 (1976).

III. Final Action

EPA is approving the revisions to the Pennsylvania SIP submitted by PADEP on January 27, 2005 to establish and require VOC and NO_X RACT for seven sources pursuant to the Commonwealth's SIP-approved generic RACT regulations.

IV. Statutory and Executive Order Reviews

A. General Requirements

Under Executive Order 12866 (58 FR 51735, October 4, 1993), this action is not a ''significant regulatory action'' and therefore is not subject to review by the Office of Management and Budget. For this reason, this action is also not subject to Executive Order 13211, ''Actions Concerning Regulations That Significantly Affect Energy Supply, Distribution, or Use'' (66 FR 28355, May 22, 2001). This action merely approves state law as meeting Federal requirements and imposes no additional requirements beyond those imposed by state law. Accordingly, the Administrator certifies that this rule will not have a significant economic impact on a substantial number of small entities under the Regulatory Flexibility Act (5 U.S.C. 601 *et seq.*). Because this rule approves pre-existing requirements under state law and does not impose any additional enforceable duty beyond that required by state law, it does not contain any unfunded mandate or significantly or uniquely affect small governments, as described in the Unfunded Mandates Reform Act of 1995 (Public Law 104–4). This rule also does not have tribal implications because it will not have a substantial direct effect on one or more Indian tribes, on the relationship between the Federal Government and Indian tribes, or on the distribution of power and responsibilities between the Federal Government and Indian tribes, as specified by Executive Order 13175 (65 FR 67249, November 9, 2000). This action also does not have federalism implications because it does not have substantial direct effects on the States, on the relationship between the National Government and the States, or on the distribution of power and responsibilities among the various levels of government, as specified in Executive Order 13132 (64 FR 43255,

August 10, 1999). This action merely approves a state rule implementing a Federal standard, and does not alter the relationship or the distribution of power and responsibilities established in the (CAA). This rule also is not subject to Executive Order 13045 ''Protection of Children from Environmental Health Risks and Safety Risks'' (62 FR 19885, April 23, 1997), because it is not economically significant.

In reviewing SIP submissions, EPA's role is to approve state choices, provided that they meet the criteria of the CAA. In this context, in the absence of a prior existing requirement for the State to use voluntary consensus standards (VCS), EPA has no authority to disapprove a SIP submission for failure to use VCS. It would thus be inconsistent with applicable law for EPA, when it reviews a SIP submission, to use VCS in place of a SIP submission that otherwise satisfies the provisions of the CAA. Thus, the requirements of section 12(d) of the National Technology Transfer and Advancement Act of 1995 (15 U.S.C. 272 note) do not apply. This rule does not impose an information collection burden under the provisions of the Paperwork Reduction Act of 1995 (44 U.S.C. 3501 *et seq.*).

B. Submission to Congress and the Comptroller General

The Congressional Review Act, 5 U.S.C. 801 *et seq.*, as added by the Small Business Regulatory Enforcement Fairness Act of 1996, generally provides that before a rule may take effect, the agency promulgating the rule must submit a rule report, which includes a copy of the rule, to each House of the Congress and to the Comptroller General of the United States. Section 804 exempts from section 801 the following types of rules: (1) Rules of particular applicability; (2) rules relating to agency management or personnel; and (3) rules of agency organization, procedure, or practice that do not substantially affect the rights or obligations of non-agency parties. 5 U.S.C. 804(3). EPA is not required to submit a rule report regarding today's action under section 801 because this is a rule of particular applicability establishing source-specific requirements for seven named sources.

C. Petitions for Judicial Review

Under section 307(b)(1) of the Clean Air Act, petitions for judicial review of this action must be filed in the United States Court of Appeals for the appropriate circuit by January 3, 2006. Filing a petition for reconsideration by the Administrator of this final rule does not affect the finality of this rule for the purposes of judicial review nor does it extend the time within which a petition for judicial review may be filed, and shall not postpone the effectiveness of such rule or action.

This action approving source-specific RACT requirements for seven sources in the Commonwealth of Pennsylvania may not be challenged later in proceedings to enforce its requirements. (*See* section 307(b)(2).)

List of Subjects in 40 CFR Part 52

Environmental protection, Air pollution control, Nitrogen dioxide, Ozone, Reporting and recordkeeping requirements, Volatile organic compounds.

Dated: October 24, 2005.

Donald S. Welsh,

Regional Administrator, Region III.

■ 40 CFR part 52 is amended as follows:

PART 52—[AMENDED]

■ 1. The authority citation for part 52 continues to read as follows:

Authority: 42 U.S.C. 7401 *et seq.*

Subpart NN—Pennsylvania

■ 2. In § 52.2020, the table in paragraph (d)(1) is amended by adding the entries for Molded Fiber Glass, Union City; SKF, USA, Incorporated; Erie Forge and Steel Incorporated; OSRAM SYLVANIA Products, Inc.; Owens-Brockway Glass Container; Texas Eastern Transmission Corporation; and Johnstown America Corporation at the end of the table to read as follows:

§ 52.2020 Identification of plan.

* * * * *

(d) * * *

(1) * * *

Name of source	Permit No.	County	State effective date	EPA approval date	Additional explanation/§ 52.2063 citation
* *	*	*	*	*	*
Molded Fiber Glass, Union City	OP–25–035	Erie	7/30/99	11/1/05 [Insert page number where the document begins].	52.2020(d)(1)(k).
SKF, USA, Incorporated	67–02010A	York	7/19/00	11/1/05 [Insert page number where the document begins].	52.2020(d)(1)(k).
Erie Forge and Steel, Inc.	OP–25–924	Erie	2/10/00	11/1/05 [Insert page number where the document begins].	52.2020(d)(1)(k).
OSRAM SYLVANIA Products, Inc.	OP–59–0007	Tioga	1/22/98	11/1/05 [Insert page number where the document begins].	52.2020(d)(1)(k).
Owens-Brockway Glass Container	OP–33–002	Jefferson	11/23/98	11/1/05 [Insert page number where the document begins].	52.2020(d)(1)(k).
Texas Eastern Transmission Corporation	32–000–230	Indiana	9/25/95	11/1/05 [Insert page number where the document begins].	52.2020(d)(1)(k).
Johnstown America Corporation	11–000–288	Cambria	1/13/99	11/1/05 [Insert page number where the document begins].	52.2020(d)(1)(k).

* * * * *

[FR Doc. 05–21750 Filed 10–31–05; 8:45 am]
BILLING CODE 6560–50–P

ENVIRONMENTAL PROTECTION AGENCY

40 CFR Part 52

[R03–OAR–2005–PA–0006; FRL–7992–4]

Approval and Promulgation of Air Quality Implementation Plans; Pennsylvania; VOC RACT Determinations for Three Individual Sources

AGENCY: Environmental Protection Agency (EPA).

ACTION: Final rule.

SUMMARY: EPA is taking final action to approve revisions to the Commonwealth of Pennsylvania State Implementation Plan (SIP). The revisions were submitted by the Pennsylvania Department of Environmental Protection (PADEP) to establish and require reasonably available control technology (RACT) for three major sources of volatile organic compounds (VOC) pursuant to the Commonwealth of Pennsylvania's SIP-approved generic RACT regulations. EPA is approving these revisions in accordance with the Clean Air Act (CAA).

DATES: This rule is effective on December 1, 2005.

ADDRESSES: EPA has established a docket for this action under Regional Material in EDocket (RME) ID Number R03–OAR–2005–PA–0006. All documents in the docket are listed in the RME index at *http://docket.epa.gov/rmepub/*. Once in the system, select ''quick search,'' then key in the appropriate RME identification number. Although listed in the electronic docket, some information is not publicly available, *i.e.*, confidential business information (CBI) or other information whose disclosure is restricted by statute. Certain other material, such as copyrighted material, is not placed on the Internet and will be publicly available only in hard copy form. Publicly available docket materials are available either electronically in RME or in hard copy for public inspection during normal business hours at the Air Protection Division, U.S. Environmental Protection Agency, Region III, 1650 Arch Street, Philadelphia, Pennsylvania 19103. Copies of the State submittal are available at the Pennsylvania Department of Environmental Protection, Bureau of Air Quality, P.O. Box 8468, 400 Market Street, Harrisburg, Pennsylvania 17105.

FOR FURTHER INFORMATION CONTACT: LaKeshia N. Robertson (215) 814–2113, or by e-mail at *robertson.lakeshia@epa.gov*.

SUPPLEMENTARY INFORMATION:

I. Background

On April 1, 2005 (70 FR 16717), EPA published a direct final rule (DFR) for the Commonwealth of Pennsylvania. The DFR proposed approval of formal SIP revisions submitted by Pennsylvania on August 30, 2004. These SIP revisions consist of source-specific operating permits and/or plan approvals issued by PADEP to establish and require RACT pursuant to the Commonwealth's SIP-approved generic RACT regulations. The following table identifies the sources and the individual plan approvals (PAs) and operating permits (OPs) which are the subject of this rulemaking.

PENNSYLVANIA—VOC AND NO_X RACT DETERMINATIONS FOR INDIVIDUAL SOURCES

Source's name	County	Plan approval (PA #) operating permit (OP)	Source type	''Major Source'' pollutant
Salem Tube, Inc	Mercer	OP 43–142	Five Reheat Furnaces and Trichloroethylene Dipping Tank.	VOC.
SGL Carbon Corporation	Elk	OP 24–131	Flame Grids, Furnaces, and Special Impregnation (resin).	VOC.
Dominion Trans, Inc	Clinton	18–00006	Four Salt Heaters, Natural Gas Boiler, Two Hot Water Heaters, Two Space Heaters, and Three Superior Boilers.	VOC.

An explanation of the CAA's RACT requirements as they apply to the Commonwealth and EPA's rationale for approving these SIP revisions were provided in the NPR and will not be restated here. In accordance with direct final rulemaking procedures, on April 1, 2005 (70 FR 16784), EPA also published a companion notice of proposed rulemaking on these SIP revisions inviting interested parties to comment on the DFR. Timely adverse comments were submitted on EPA's April 1, 2005 DFR.

On May 26, 2005 (70 FR 30377), due to receipt of the adverse comments on its approval of the PADEP's RACT determination for the three individual sources, EPA published a withdrawal of the DFR. A summary of these comments and EPA's responses are provided in Section II of the document.

II. Summary of Public Comments and EPA Responses

Comment: On April 4, 2005, a citizen submitted adverse comments on EPA's approval of the DEP's VOC RACT determinations for three individual sources. The commenter states that the standards should be stringent enough to prevent the possibility of polluting eastward states and to protect human health and welfare.

Response: The rulemaking at issue is limited in scope and addresses the CAA section 182 (b) (1) RACT requirements for sources located in the ozone nonattainment areas. The commenter did not comment specifically on the RACT determinations for three individual sources and did not submit any supporting technical data or information to support that the standards for three sources do not represent RACT. Rather, the commenter makes broad statements alleging that the regulations should be more stringent than those required under the Act in order to ensure adequate protection. The comment is not a ''significant comment'' to which EPA needs to respond. *Whitman* v. *American Trucking Ass'n.*, 31 U.S. 457, n.2 at 471 (2001) (Under the CAA, EPA need only respond to significant comments, *i.e.*, comments relevant to EPA's decision). Mere ''assertions that in the opinions of the commenter the Agency got it wrong,'' are not relevant comments warranting a response. *International Fabricare Inst.* v. *EPA*, 972 F.2d 384, 391 (D.C. Cir. 1992). In terms of the comment, that the rules

should be more stringent than required under the Act, EPA has no authority to mandate that a State regulate more stringently than required. Under the CAA's bifurcated scheme, the State is responsible for choosing how a source must be regulated for purposes of attaining the NAAQS and EPA's role is limited in reviewing the State's choice to ensure it meets the minimum statutory requirements. The commenter is not claiming that the regulations do not meet the statutory minimum, but rather that the statute does not require enough. EPA has no authority to modify the statute, as requested by the commenter nor does the EPA have authority to require that the State regulate more stringently than required by the statute. The CAA is based upon ''cooperative federalism,'' which contemplates that each State will develop its own SIP, and that States retain a large degree of flexibility in choosing which sources to control and to what degree. EPA must approve a State's plan if it meets the minimum requirements of the CAA. *Union Elec. Co.* v. *EPA*, 427 U.S. 246, 264–266 (1976).

III. Final Action

EPA is approving the revisions to the Pennsylvania SIP submitted by PADEP on August 30, 2004 to establish and require VOC RACT for three major sources pursuant to the Commonwealth's SIP-approved generic RACT regulations.

IV. Statutory and Executive Order Reviews

A. General Requirements

Under Executive Order 12866 (58 FR 51735, October 4, 1993), this action is not a ''significant regulatory action'' and therefore is not subject to review by the Office of Management and Budget. For this reason, this action is also not subject to Executive Order 13211, ''Actions Concerning Regulations That Significantly Affect Energy Supply, Distribution, or Use'' (66 FR 28355, May 22, 2001). This action merely approves state law as meeting Federal requirements and imposes no additional requirements beyond those imposed by state law. Accordingly, the Administrator certifies that this rule will not have a significant economic impact on a substantial number of small entities under the Regulatory Flexibility Act (5 U.S.C. 601 *et seq.*). Because this rule approves pre-existing requirements under state law and does not impose any additional enforceable duty beyond that required by state law, it does not contain any unfunded mandate or significantly or uniquely affect small governments, as described in the Unfunded Mandates Reform Act of 1995 (Public Law 104–4). This rule also does not have tribal implications because it will not have a substantial direct effect on one or more Indian tribes, on the relationship between the Federal Government and Indian tribes, or on the distribution of power and responsibilities between the Federal Government and Indian tribes, as specified by Executive Order 13175 (65 FR 67249, November 9, 2000). This action also does not have federalism implications because it does not have substantial direct effects on the States, on the relationship between the National Government and the States, or on the distribution of power and responsibilities among the various levels of government, as specified in Executive Order 13132 (64 FR 43255, August 10, 1999). This action merely approves a state rule implementing a Federal standard, and does not alter the relationship or the distribution of power and responsibilities established in the Clean Air Act. This rule also is not subject to Executive Order 13045 ''Protection of Children from Environmental Health Risks and Safety Risks'' (62 FR 19885, April 23, 1997), because it is not economically significant.

In reviewing SIP submissions, EPA's role is to approve state choices, provided that they meet the criteria of the Clean Air Act. In this context, in the absence of a prior existing requirement for the State to use voluntary consensus standards (VCS), EPA has no authority to disapprove a SIP submission for failure to use VCS. It would thus be inconsistent with applicable law for EPA, when it reviews a SIP submission, to use VCS in place of a SIP submission that otherwise satisfies the provisions of the Clean Air Act. Thus, the requirements of section 12(d) of the National Technology Transfer and Advancement Act of 1995 (15 U.S.C. 272 note) do not apply. This rule does not impose an information collection burden under the provisions of the Paperwork Reduction Act of 1995 (44 U.S.C. 3501 *et seq.*).

B. Submission to Congress and the Comptroller General

The Congressional Review Act, 5 U.S.C. 801 *et seq.*, as added by the Small Business Regulatory Enforcement Fairness Act of 1996, generally provides that before a rule may take effect, the agency promulgating the rule must submit a rule report, which includes a copy of the rule, to each House of the Congress and to the Comptroller General of the United States. Section 804 exempts from section 801 the following types of rules: (1) Rules of particular applicability; (2) rules relating to agency management or personnel; and (3) rules of agency organization, procedure, or practice that do not substantially affect the rights or obligations of non-agency parties. 5 U.S.C. 804(3). EPA is not required to submit a rule report regarding today's action under section 801 because this is a rule of particular applicability establishing source-specific requirements for three named sources.

C. Petitions for Judicial Review

Under section 307(b)(1) of the Clean Air Act, petitions for judicial review of this action must be filed in the United States Court of Appeals for the appropriate circuit by January 3, 2006. Filing a petition for reconsideration by the Administrator of this final rule does not affect the finality of this rule for the purposes of judicial review nor does it extend the time within which a petition for judicial review may be filed, and shall not postpone the effectiveness of such rule or action.

This action approving source-specific RACT requirements for three sources in the Commonwealth of Pennsylvania may not be challenged later in proceedings to enforce its requirements. (See section 307(b)(2).)

List of Subjects in 40 CFR Part 52

Environmental protection, Air pollution control, Ozone, Reporting and recordkeeping requirements, Volatile organic compounds.

Dated: October 24, 2005.

Donald S. Welsh,

Regional Administrator, Region III.

■ 40 CFR part 52 is amended as follows:

PART 52—[AMENDED]

■ 1. The authority citation for part 52 continues to read as follows:

Authority: 42 U.S.C. 7401 *et seq.*

Subpart NN—Pennsylvania

■ 2. In § 52.2020, the table in paragraph (d)(1) is amended by adding the entries for SGL Carbon Corporation; Salem Tube, Inc.; and Dominion Trans, Inc. at the end of the table to read as follows:

§ 52.2020 Identification of plan.

* * * * *

(d) * * *

(1) * * *

Name of source	Permit number	County	State effective date	EPA approval date	Additional explanation/§ 52.2063 citation
* *	*	*	*	*	*
SGL Carbon Corporation	OP 24–131	Elk	5/12/95 5/31/95	11/1/05 [Insert page number where the document begins].	52.2020(d)(1)(e).
Salem Tube, Inc.	OP 43–142	Mercer	2/16/99	11/1/05 [Insert page number where the document begins].	52.2020(d)(1)(e).
Dominion Trans, Inc.	18–00006	Clinton	6/15/99 9/29/03	11/1/05 [Insert page number where the document begins].	52.2020(d)(1)(e).

* * * * *

[FR Doc. 05–21752 Filed 10–31–05; 8:45 am]
BILLING CODE 6560–50–P

ENVIRONMENTAL PROTECTION AGENCY

40 CFR Part 52

[R03–OAR–2005–DE–0001; FRL–7992–3]

Approval and Promulgation of Air Quality Implementation Plans; Delaware; Ambient Air Quality Standard for Ozone and Fine Particulate Matter

AGENCY: Environmental Protection Agency (EPA).

ACTION: Final rule.

SUMMARY: EPA is taking final action to approve revisions to the Delaware State Implementation Plan (SIP). The revisions were submitted by the Delaware Department of Natural Resources and Environmental Control (DNREC) and consist of modifications to the ambient air quality standards for ozone and fine particulate matter. EPA is approving these revisions in the SIP in accordance with the Clean Air Act (CAA).

DATES: This final rule is effective on December 1, 2005.

ADDRESSES: EPA has established a docket for this action under Regional Material in EDocket (RME) ID Number R03–OAR–2005–DE–0001. All documents in the docket are listed in the RME index at *http://docket.epa.gov/rmepub/*. Once in the system, select ''quick search,'' then key in the appropriate RME identification number. Although listed in the electronic docket, some information is not publicly available, *i.e.*, confidential business information (CBI) or other information whose disclosure is restricted by statute. Certain other material, such as copyrighted material, is not placed on the Internet and will be publicly available only in hard copy form. Publicly available docket materials are available either electronically in RME or in hard copy for public inspection during normal business hours at the Air Protection Division, U.S. Environmental Protection Agency, Region III, 1650 Arch Street, Philadelphia, Pennsylvania 19103. Copies of the State submittal are available at the Delaware Department of Natural Resources and Environmental Control, 89 Kings Highway, P.O. Box 1401, Dover, Delaware 19903.

FOR FURTHER INFORMATION CONTACT: Rose Quinto, (215) 814–2182, or by e-mail at *quinto.rose@epa.gov*.

SUPPLEMENTARY INFORMATION:

I. Background

On April 1, 2003, DNREC submitted a formal SIP revision that consists of an amendment that included the revised ambient air quality standards for ozone and particulate matter. On July 18, 2005 (70 FR 41146), EPA published a direct final rule (DFR) approving revisions to the Delaware's SIP. An explanation of the CAA's requirements as they apply to Delaware and EPA's rationale for approving these SIP revisions were provided in the DFR and will not be restated here. In accordance with direct final rulemaking procedures, on July 18, 2005 (70 FR 41166), EPA also published a companion notice of proposed rulemaking (NPR) on these SIP revisions inviting interested parties to comment on the DFR. Timely adverse comments were submitted on EPA's July 18, 2005 DFR.

On September 16, 2005 (70 FR 54639), due to receipt of the adverse comments submitted in response to the DFR, EPA published a withdrawal of the DFR. A summary of those comments and EPA's responses are provided in Section II of this document.

II. Summary of Public Comments and EPA Responses

Comment: On July 18, 2005, a citizen submitted adverse comments on EPA's DFR notice approving Delaware's ambient air quality standards for ozone and fine particulate matter. The commenter states that the regulations are not strict enough and that they leave too much latitude for polluters to poison and kill us. The commenter also states that the fines and penalties for polluters should be increased by one thousand percent.

Response: The rulemaking at issue is limited in scope and addresses the 1997 Federal 8-hour ozone and PM2.5 standards that Delaware incorporates into Section 6 of Regulation 3 of the Delaware Regulations Governing the Control of Air Pollution. The commenter did not submit any supporting technical data or information to support that the regulations are not strict enough. Rather the commenter makes broad statements alleging (1) that the regulations should be more stringent than those required under the Act, and (2) that the fines and penalties for polluters should be increased one thousand percent. These comments are not ''significant comments'' to which EPA needs to respond. *Whitman* v. *American Trucking Ass'n.*, 531 U.S. 457, n.2 at 471 (2001) (Under the CAA, EPA need only respond to significant comments, i.e., comments relevant to EPA's decision). Mere ''assertions that in the opinions of the commenter the Agency got it wrong,'' are not relevant comments warranting a response. *International Fabricare Inst.* v. *EPA*, 972 F.2d 384, 391 (D.C. Cir. 1992). As to the comment that the rules should be more stringent than required under the Act, EPA has no authority to mandate that a State regulate more stringently than required. Under the CAA's bifurcated scheme, the State is responsible for choosing how air pollution sources must be regulated for purposes of attaining the national ambient air quality standards (NAAQS) and EPA's role is limited in reviewing the State's choice to ensure it meets the minimum statutory requirements. Here, as is clear from the commenter's first comment, the commenter is not claiming that the

regulations do not meet the statutory minimum, but rather that the statute does not require enough. EPA has no authority to modify the statute, as requested by the commenter nor does EPA have authority to require the State to regulate more stringently than required by the statute. The CAA is based upon ''cooperative federalism,'' which contemplates that each State will develop its own SIP, and that States retain a large degree of flexibility in choosing which sources to control and to what degree. EPA must approve a State's plan if it meets the ''minimum requirements of the CAA.'' *Union Elec. Co.* v. *EPA*, 427 U.S. 246, 264–266 (1976).

As to the commenter's second point, this rulemaking does not address fines and penalties for polluters and, therefore, is not relevant to this rulemaking.

III. Final Action

EPA is approving the revisions to the Delaware SIP submitted by DNREC on April 1, 2003 to incorporate the 8-hour ambient air quality standards for ozone and fine particulate matter. Delaware's SIP revisions for the ambient air quality standards for ozone and fine particulate matter are consistent with the 8-hour Federal NAAQS.

IV. Statutory and Executive Order Reviews

A. General Requirements

Under Executive Order 12866 (58 FR 51735, October 4, 1993), this action is not a ''significant regulatory action'' and therefore is not subject to review by the Office of Management and Budget. For this reason, this action is also not subject to Executive Order 13211,''Actions Concerning Regulations That Significantly Affect Energy Supply, Distribution, or Use'' (66 FR 28355, May 22, 2001). This action merely approves state law as meeting Federal requirements and imposes no additional requirements beyond those imposed by state law. Accordingly, the Administrator certifies that this rule will not have a significant economic impact on a substantial number of small entities under the Regulatory Flexibility Act (5 U.S.C. 601 *et seq.*). Because this rule approves pre-existing requirements under state law and does not impose any additional enforceable duty beyond that required by state law, it does not contain any unfunded mandate or significantly or uniquely affect small governments, as described in the Unfunded Mandates Reform Act of 1995 (Pub. L. 104–4). This rule also does not have tribal implications because it will not have a substantial direct effect on one or more Indian tribes, on the relationship between the Federal Government and Indian tribes, or on the distribution of power and responsibilities between the Federal Government and Indian tribes, as specified by Executive Order 13175 (65 FR 67249, November 9, 2000). This action also does not have Federalism implications because it does not have substantial direct effects on the States, on the relationship between the national government and the States, or on the distribution of power and responsibilities among the various levels of government, as specified in Executive Order 13132 (64 FR 43255, August 10, 1999). This action merely approves a state rule implementing a Federal standard, and does not alter the relationship or the distribution of power and responsibilities established in the Clean Air Act. This rule also is not subject to Executive Order 13045 ''Protection of Children from Environmental Health Risks and Safety Risks'' (62 FR 19885, April 23, 1997), because it is not economically significant.

In reviewing SIP submissions, EPA's role is to approve state choices, provided that they meet the criteria of the Clean Air Act. In this context, in the absence of a prior existing requirement for the State to use voluntary consensus standards (VCS), EPA has no authority to disapprove a SIP submission for failure to use VCS. It would thus be inconsistent with applicable law for EPA, when it reviews a SIP submission, to use VCS in place of a SIP submission that otherwise satisfies the provisions of the Clean Air Act. Thus, the requirements of section 12(d) of the National Technology Transfer and Advancement Act of 1995 (15 U.S.C. 272 note) do not apply. This rule does not impose an information collection burden under the provisions of the Paperwork Reduction Act of 1995 (44 U.S.C. 3501 *et seq.*).

B. Submission to Congress and the Comptroller General

The Congressional Review Act, 5 U.S.C. 801 *et seq.*, as added by the Small Business Regulatory Enforcement Fairness Act of 1996, generally provides that before a rule may take effect, the agency promulgating the rule must submit a rule report, which includes a copy of the rule, to each House of the Congress and to the Comptroller General of the United States. EPA will submit a report containing this rule and other required information to the U.S. Senate, the U.S. House of Representatives, and the Comptroller General of the United States prior to publication of the rule in the **Federal Register**. This rule is not a ''major rule'' as defined by 5 U.S.C. 804(2).

C. Petitions for Judicial Review

Under section 307(b)(1) of the Clean Air Act, petitions for judicial review of this action must be filed in the United States Court of Appeals for the appropriate circuit by January 3, 2006. Filing a petition for reconsideration by the Administrator of this final rule does not affect the finality of this rule for the purposes of judicial review nor does it extend the time within which a petition for judicial review may be filed, and shall not postpone the effectiveness of such rule or action. This action approving the Delaware's 8-hour ambient air quality standards for ozone and fine particulate matter may not be challenged later in proceedings to enforce its requirements. (See section 307(b)(2).)

List of Subjects in 40 CFR Part 52

Environmental protection, Air pollution control, Nitrogen dioxide, Ozone, Particulate matter, Reporting and recordkeeping requirements, Volatile organic compounds.

Dated: October 21, 2005.

Donald S. Welsh,

Regional Administrator, Region III.

■ 40 CFR part 52 is amended as follows:

PART 52—[AMENDED]

■ 1. The authority citation for part 52 continues to read as follows:

Authority: 42 U.S.C. 7401 *et seq.*

Subpart I—Delaware

■ 2. In Section 52.420, the table in paragraph (c) is amended by adding an entry for Regulation 1, Section 2 after the existing entry, and revising the entries for Regulation 3, Sections 1, 6, and 11 to read as follows:

§ 52.420 Identification of plan.

(c) EPA approved regulations.

EPA-APPROVED REGULATIONS IN THE DELAWARE SIP

State citation	Title/subject	State effective date	EPA approval date	Additional explanation
Regulation 1 Definitions and Administrative Principles				
*	*	*	*	*
Section 2	Definitions	02/11/2003	11/1/2005 [Insert page number where the document begins].	Added definition of PM2.5.
*	*	*	*	*
Regulation 3 Ambient Air Quality Standards				
Section 1	General Provisions	02/11/2003	11/1/2005 [Insert page number where the document begins].	Addition of section 1.6.j.
*	*	*	*	*
Section 6	Ozone	02/11/2003	11/1/2005 [Insert page number where the document begins].	Addition to section 6.1—''This standard shall be applicable to New Castle and Kent Counties.'' Addition of section 6.2.
*	*	*	*	*
Section 11	PM10 and PM2.5 Particulates	02/11/2003	11/1/2005 [Insert page number where the document begins].	Section title added ''and PM2.5.'' Addition of sections 11.2.a. and 11.2.b.
*	*	*	*	*

* * * * *

[FR Doc. 05–21751 Filed 10–31–05; 8:45 am]

BILLING CODE 6560–50–P

DEPARTMENT OF HOMELAND SECURITY

Federal Emergency Management Agency

44 CFR Part 64

[Docket No. FEMA–7899]

Suspension of Community Eligibility

AGENCY: Department of Homeland Security, Federal Emergency Management Agency (FEMA), Mitigation Division.

ACTION: Final rule.

SUMMARY: This rule identifies communities, where the sale of flood insurance has been authorized under the National Flood Insurance Program (NFIP), that are scheduled for suspension on the effective dates listed within this rule because of noncompliance with the floodplain management requirements of the program. If FEMA receives documentation that the community has adopted the required floodplain management measures prior to the effective suspension date given in this rule, the suspension will not occur and a notice of this will be provided by publication in the **Federal Register** on a subsequent date.

DATES: *Effective Dates:* The effective date of each community's scheduled suspension is the third date (''Susp.'') listed in the third column of the following tables.

ADDRESSES: If you want to determine whether a particular community was suspended on the suspension date, contact the appropriate FEMA Regional Office or the NFIP servicing contractor.

FOR FURTHER INFORMATION CONTACT: Michael M. Grimm, Mitigation Division, 500 C Street SW., Room 412, Washington, DC 20472, (202) 646–2878.

SUPPLEMENTARY INFORMATION: The NFIP enables property owners to purchase flood insurance which is generally not otherwise available. In return, communities agree to adopt and administer local floodplain management aimed at protecting lives and new construction from future flooding. Section 1315 of the National Flood Insurance Act of 1968, as amended, 42 U.S.C. 4022, prohibits flood insurance coverage as authorized under the NFIP, 42 U.S.C. 4001 *et seq.*; unless an appropriate public body adopts adequate floodplain management measures with effective enforcement measures. The communities listed in this document no longer meet that statutory requirement for compliance with program regulations, 44 CFR part 59 *et seq.* Accordingly, the communities will be suspended on the effective date in the third column. As of that date, flood insurance will no longer be available in the community. However, some of these communities may adopt and submit the required documentation of legally enforceable floodplain management measures after this rule is published but prior to the actual suspension date. These communities will not be suspended and will continue their eligibility for the sale of insurance. A notice withdrawing the suspension of the communities will be published in the **Federal Register**.

In addition, FEMA has identified the Special Flood Hazard Areas (SFHAs) in these communities by publishing a Flood Insurance Rate Map (FIRM). The date of the FIRM, if one has been published, is indicated in the fourth column of the table. No direct Federal financial assistance (except assistance

pursuant to the Robert T. Stafford Disaster Relief and Emergency Assistance Act not in connection with a flood) may legally be provided for construction or acquisition of buildings in identified SFHAs for communities not participating in the NFIP and identified for more than a year, on FEMA's initial flood insurance map of the community as having flood-prone areas (section 202(a) of the Flood Disaster Protection Act of 1973, 42 U.S.C. 4106(a), as amended). This prohibition against certain types of Federal assistance becomes effective for the communities listed on the date shown in the last column. The Administrator finds that notice and public comment under 5 U.S.C. 553(b) are impracticable and unnecessary because communities listed in this final rule have been adequately notified.

Each community receives 6-month, 90-day, and 30-day notification letters addressed to the Chief Executive Officer stating that the community will be suspended unless the required floodplain management measures are met prior to the effective suspension date. Since these notifications were made, this final rule may take effect within less than 30 days.

National Environmental Policy Act

This rule is categorically excluded from the requirements of 44 CFR part 10, Environmental Considerations. No environmental impact assessment has been prepared.

Regulatory Flexibility Act

The Administrator has determined that this rule is exempt from the requirements of the Regulatory Flexibility Act because the National Flood Insurance Act of 1968, as amended, 42 U.S.C. 4022, prohibits flood insurance coverage unless an appropriate public body adopts adequate floodplain management measures with effective enforcement measures. The communities listed no longer comply with the statutory requirements, and after the effective date, flood insurance will no longer be available in the communities unless remedial action takes place.

Regulatory Classification

This final rule is not a significant regulatory action under the criteria of section 3(f) of Executive Order 12866 of September 30, 1993, Regulatory Planning and Review, 58 FR 51735.

Paperwork Reduction Act

This rule does not involve any collection of information for purposes of the Paperwork Reduction Act, 44 U.S.C. 3501 *et seq.*

List of Subjects in 44 CFR Part 64.

Flood insurance, Floodplains.

■ Accordingly, 44 CFR part 64 is amended as follows:

PART 64—[AMENDED]

■ 1. The authority citation for Part 64 continues to read as follows:

Authority: 42 U.S.C. 4001 *et seq.*; Reorganization Plan No. 3 of 1978, 3 CFR, 1978 Comp.; p. 329; E.O. 12127, 44 FR 19367, 3 CFR, 1979 Comp.; p. 376.

§ 64.6 [Amended]

■ 2. The tables published under the authority of § 64.6 are amended as follows:

State and location	Community No.	Effective date authorization/cancellation of sale of flood insurance in community	Current effective map date	Date certain Federal assistance no longer available in SFHAs
Region I				
Maine: Windsor, Town of, Kennebec County..	230251	January 29, 1976, Emerg; February 4, 1987, Reg; November 3, 2005, Susp.	02/04/1987	11/03/2005
Region IV				
North Carolina:				
Jacksonville, City of, Onslow County. ...	370178	February 24, 1975, Emerg; February 15, 1985, Reg; November 3, 2005, Susp.	11/03/2005	Do.
North Topsail Beach, Town of, Onslow County..	370466	June 15, 1990, Emerg; June 15, 1990, Reg; November 3, 2005, Susp.	.....do	Do.
Onslow County, Unincorporated Areas.	370340	April 7, 1975, Emerg; July 2, 1987, Reg; November 3, 2005, Susp.	.....do	Do.
Richlands, Town of, Onslow County.	370341	March 17, 1980, Emerg; July 3, 1986, Reg; November 3, 2005, Susp.	.....do	Do.
Swansboro, Town of, Onslow County. ..	370179	April 11, 1975, Emerg; October 18, 1983, Reg; November 3, 2005, Susp.	.....do	Do.

*do- = Ditto
Code for reading third column: Emerg.- Emergency; Reg.- Regular; Susp- Suspension.

Dated: October 25, 2005.

Michael K. Buckley,

Deputy Director, Mitigation Division, Federal Emergency Management Agency.

[FR Doc. 05–21702 Filed 10–31–05; 8:45 am]

BILLING CODE 9110–12–P

FEDERAL COMMUNICATIONS COMMISSION

47 CFR Part 54

[CC Docket Nos. 96–45; 02–6; WC Docket 02–60; 03–109; FCC 05–178]

Federal-State Joint Board on Universal Service

AGENCY: Federal Communications Commission.

ACTION: Final rule.

SUMMARY: In this document, the Commission takes immediate steps to assist the victims of Hurricane Katrina by making available approximately $211 million of targeted support from the Universal Service Fund (''USF'') for reconstruction and remediation relating to the restoration of telecommunications services. We expect that these measures will help the victims of Hurricane Katrina recover from the catastrophic damage and help the affected communities rebuild.

DATES: Effective October 14, 2005.

FOR FURTHER INFORMATION CONTACT: Mika Savir, Attorney, Wireline Competition Bureau, Telecommunications Access Policy Division, (202) 418–7400, TTY (202) 418–0484. For additional information concerning the information collection(s) contained in this document, contact Judith-B. Herman at (202) 418–0214, or via the Internet at *Judith-B.Herman@fcc.gov.*

SUPPLEMENTARY INFORMATION: This is a summary of the Commission's *Order*, in CC Docket Nos. 96–45; 02–6; WC Docket 02–60; 03–109; FCC 05–178, released October 14, 2005. The full text of this document is available for public inspection during regular business hours in the FCC Reference Center, Room CY–A257, 445 12th Street, SW., Washington, DC 20554.

I. Introduction

1. In this Order, we take immediate steps to assist the victims of Hurricane Katrina by making available approximately $211 million of targeted support from the Universal Service Fund (''USF'') for reconstruction and remediation relating to the restoration of telecommunications services. We expect that these measures will help the victims of Hurricane Katrina recover from the catastrophic damage and help the affected communities rebuild. As explained below, because of the exigent circumstances, we find good cause to adopt temporary order without notice-and-comment in order to assist the Nation's disaster relief effort.

II. Order

A. Waiver Standard

2. Generally, the Commission's rules may be waived for good cause shown. Waiver of the Commission's rules is therefore appropriate only if special circumstances warrant a deviation from the general rule, and such deviation will serve the public interest. As we discuss in more detail below, we find that the catastrophic damage to lives and property as a result of Hurricane Katrina in the Gulf Coast states and the need for expedited restoration of communications presents special circumstances for waiving certain universal service rules and that such a waiver is in the public interest.

3. We find that it is appropriate to implement these rules, effective upon release of this *Order*, on a temporary basis to expand funding in the affected areas. We find that the circumstances caused by Hurricane Katrina create a special need for the Commission to use its discretion to provide universal service support to health care providers in the affected areas. This support is necessary to address the unique circumstances faced by health care providers, schools, libraries, service providers, and low-income consumers in the states of Alabama, Louisiana, and Mississippi, and the areas where evacuees have relocated. The temporary order represents our recognition of the vital role played by telecommunications and by telemedicine in responding to the needs in the communities affected by Hurricane Katrina. The temporary order also furthers the Commission's core responsibility to make available a rapid nationwide network for the purpose of responding to national crisis situations. For all of these reasons, we find this interim relief to be in the public interest.

B. Lifeline/Link-Up Support

1. Need for and Description of Temporary Order

4. In this *Order*, we adopt temporary modifications to the low-income program rules to improve the effectiveness of the low-income support mechanism at meeting the needs of victims of Hurricane Katrina. Since its inception, Lifeline/Link-Up has provided support for telephone service to millions of low-income consumers. Nationally, the telephone penetration rate is 92.4 percent, in large part due to the success of the Lifeline/Link-Up program and our other universal service programs. In light of the catastrophic damage caused by the worst natural disaster this country has faced, thousands of people remain without basic telephone service. Unless addressed, this lack of access to telecommunications will lengthen the already-long period of time anticipated for recovery from the damage caused by Hurricane Katrina.

5. As discussed in more detail below, in this section, we take two steps to address this significant problem affecting thousands of people. First, under the Lifeline program, we provide for temporary support under the federal Lifeline program for eligible telecommunications carriers making available a wireless service consumer offering to victims of Hurricane Katrina. Second, we provide support under the federal Link-Up program to hurricane victims moving to temporary housing arrangements and to those who return to permanent residences in the affected areas. To ensure victims of Hurricane Katrina in need of help receive this assistance, we base the eligibility criteria for these initiatives on those used by FEMA to provide individual disaster housing assistance to these people and entities.

6. In crafting the temporary order, we are informed by the principles of section 254 and our low-income program rules. Section 254(b) establishes principles upon which the Commission shall base policies for the preservation and advancement of universal service. Among other things, these principles state that consumers in all regions of the Nation, including low-income consumers, should have access to telecommunications and information services that are reasonably comparable to those services provided in urban areas and that are available at rates that are reasonably comparable to rates charged in urban areas. These principles also recognize that ensuring rates are affordable is a national priority. In light of these principles, we conclude that modifying the low-income program by providing for a wireless service federal Lifeline consumer offering and providing support under the federal Link-Up program for connection charges, on a temporary basis, is necessary to assist the disaster recovery efforts related to Hurricane Katrina.

7. Thousands of people left their homes because of the hurricane. Many of these people are in temporary shelters or in the process of finding interim housing and may be without a permanent home or employment for a period of time. To facilitate the access of evacuees and other displaced persons to telecommunications services, any person approved for individual FEMA housing assistance or determined by FEMA to be eligible for such individual housing assistance relating to the hurricane will be eligible for federal Lifeline support for a free wireless handset and a package of at least 300 minutes of use, not to exceed $130 per household, until March 1, 2006.

8. We find that $130 per household is a reasonable amount of support for the purchase of a handset and at least 300 minutes based on the variety of the competitive plans available to consumers throughout the United States. We note that at least one wireless provider has indicated this amount of support is sufficient to serve low-income consumers. Moreover, we find that a minimum of 300 minutes of use per household will facilitate evacuees and those remaining in the affected areas to reconnect with loved ones, and make living, housing, and work arrangements in the wake of the hurricane. In addition, we expect that upon expiration, customers will retain the wireless phone and in many instances, be able to purchase additional minutes at discounted rates. Such

support will help consumers reconnect to the telecommunications network as the disaster-struck areas are rebuilt. For purposes of this *Order*, we define ''household'' as one adult and his/her dependents, living together in the same residence. We recognize that many families that normally live together as one household have been separated due to the hurricane and the evacuation process and may represent more than one household for this temporary Lifeline support. Our intent in providing this support is to assist hurricane victims, regardless of whether they are in an intact household, separated from family temporarily, or otherwise. To work within the parameters of the existing program, we will order this temporary support available to ETCs providing the supported wireless service consumer offering. We note that to receive the temporary support, wireless carriers cannot require consumers to enter into a long-term contract or require service beyond 300 minutes or March 1, 2006, whichever is shorter.

9. We find that these modifications are economically reasonable and consistent with the existing framework of the program rules. Under the Lifeline program, low-income consumers could receive up to $10 per month or $120 per year. Under the temporary order, qualifying consumers would receive a $130 benefit, which would also include a handset. We note that this relief, combined with the action we took earlier with regard to waiver of the geographic porting requirements, would allow evacuees to maintain their home phone numbers, and promote continuity with regard to personal contacts, employment, education, and housing. Under the unique and devastating circumstances caused by the hurricane and its aftermath, we conclude that provision of this support, including a free wireless handset, is consistent with the purpose of section 254 because it is reasonably necessary to ensure that low income consumers have immediate access to telecommunications services. We further find that this support fulfills the Commission's broader mandate to make wire and radio communication service available to all people of the United States, and to promote the safety of life and property. We use our ancillary authority under Title I to include a free wireless handset.

10. We also adopt temporary order for the Link-Up program to pay for certain costs to connect victims of the hurricane to the network. Specifically, we will provide funding under the Link-Up program to eligible telecommunications carriers to receive, upon submission of an application and any necessary documentation, $30.00 per qualifying household for commencing telecommunications service for a single telecommunications connection at any temporary housing arrangements. To ensure this temporary support is targeted to those victims of Hurricane Katrina moving to temporary housing arrangements (*e.g.*, trailer parks or other temporary housing facilities), we will make this support available from release of this *Order* through March 1, 2007. In addition, we will also permit, under the Link-Up program, eligible telecommunications carriers to receive (upon submission of an application and any necessary documentation to the Administrator) $30.00 per qualifying household returning to a primary residence in the Hurricane Katrina disaster area for commencing telecommunications service for a single telecommunications connection, including the reconnection of service disconnected as a result of Hurricane Katrina. Based on the numbers provided by FEMA, we estimate that up to 370,000 households would be eligible for this temporary Link-Up support at an estimated total cost of approximately $12 million.

2. Applicable Time Period

11. Hurricane victims need access to telephone service, particularly in this emergency situation. Carriers operating in the disaster areas in Alabama, Louisiana, and Mississippi, as well as in any state where people have been temporarily relocated, *e.g.*, Texas, should have the opportunity to assist hurricane victims and receive appropriate temporary USF support payments. Accordingly, we find that due to this emergency situation, good cause exists for adopting these temporary Lifeline rules, which will expire on March 1, 2006, specifically for free wireless handsets, and at least 300 free minutes per household for displaced persons, whether they relocate within the three affected states, relocate to another state outside of the area, or return home after telephone service has been disconnected. We also find that good cause exists to adopt temporary Link-Up rules, as discussed above, which will expire on March 1, 2007.

12. Link-Up support funding is available from the release date of this *Order* until March 1, 2007. Any eligible application for Link-Up support postmarked by March 1, 2007 will receive the special Link-Up support described above. Wireless Lifeline support is available from the release date of this *Order* until March 1, 2006. Any eligible application for support postmarked by March 1, 2006 is eligible for the Wireless Lifeline support described above.

3. Eligibility

13. As discussed above, any person approved for FEMA disaster assistance or determined by FEMA to be eligible for individual assistance relating to the hurricane will be eligible for temporary federal Lifeline and Link-Up support, on a per household basis. Section 254(e) of the Communications Act of 1934, as amended, provides that ''only an eligible telecommunications carrier designated under section 214(e) shall be eligible to receive specific Federal universal service support.'' We adopt several conditions to ensure that this Lifeline and Link-Up temporary support is used solely to assist victims of Hurricane Katrina. First, this Lifeline and Link-Up support is only available to consumers approved for FEMA disaster housing assistance or determined by FEMA to be eligible for housing assistance relating to the hurricane. FEMA's rules target housing assistance to individuals and households who are harmed by a disaster and generally have limited means. For example, housing assistance is generally not available to individuals who have adequate rent-free housing accommodations. To ensure this support is targeted to those consumers with the greatest need, we are making this temporary support available to those consumers determined to be eligible for FEMA disaster housing assistance and who do not have any obligation under FEMA rules to repay FEMA for the support. Because this is temporary support intended to assist in disaster relief and restoration, we limit this Link-Up support to one connection for temporary housing and one reconnection (per household) for hurricane victims determined to be eligible for individual assistance under FEMA rules (and who have no obligation to repay the funds to FEMA) returning to permanent residences in the FEMA-designated Hurricane Katrina disaster area. We limit the Lifeline support to a free wireless handset and at least 300 free minutes. Second, the temporary Link-Up support for reconnections is available only for circumstances where the consumer was disconnected from service because of the hurricane or subsequent flooding. Third, we require consumers qualifying for this support to provide documentary evidence to the ETC serving them to demonstrate that FEMA determined they were eligible for individual disaster housing assistance. Proof of FEMA's determination of

eligibility for individual housing disaster assistance without repayment obligations is sufficient. We anticipate that the households that will receive support under the temporary order would have received support under the existing low-income program rules if they obtained telephone service. We note, however, that our Link-Up rules place certain restrictions on the number of times at the same residence a low-income consumer may qualify for support. We therefore clarify that this temporary Link-Up support will be available both for temporary housing arrangements and for eligible hurricane victims returning to permanent residences in the Hurricane Katrina disaster area.

14. By adopting these temporary modifications to our Lifeline and Link-Up programs, we are working within the existing parameters of the low-income program. The Commission has long relied on participation in means-tested programs, such as participation in the food stamps program, to determine eligibility in our low-income program. In 2004, the Commission expanded eligibility for the low-income program when it acted upon the Federal-State Joint Board's recommendation to expand the federal default eligibility criteria to include an income-based criterion and additional means-tested programs. Under the existing rules, in cases where a state does not mandate state Lifeline support, the Commission's rules rely on other means-tested federal assistance programs (*e.g.*, Temporary Assistance to Needy Families, Federal Public Housing Assistance, Low Income Home Energy Assistance Program, and the National School Lunch Program's free lunch program) to determine eligibility criteria for the low-income program. The approach we adopt here, *i.e.*, relying on FEMA determinations that a consumer is eligible for certain individual disaster assistance program, is consistent with our general approach of using federal assistance programs to determine consumer eligibility for our low-income program. By relying on FEMA determinations of household eligibility for disaster housing assistance, we are targeting this support to households struck by Hurricane Katrina, and we are using FEMA's determinations as a need-based program for determining low-income programs eligibility.

15. There are approximately 65 wireless carriers designated as ETCs in the states of Alabama, Louisiana, and Mississippi. We recognize that these ETCs, as well as wireless carriers currently designated as ETCs in other states, may not be sufficient to implement the temporary order in time to help with Hurricane Katrina disaster relief or may not be certified in areas where they now need to provide service. In order to effectively and efficiently implement the temporary order, we forbear for the purposes of this special relief, until March 1, 2006, from section 254(e)'s requirement that ''only an eligible telecommunications carrier designated under section 214(e) shall be eligible to receive specific Federal universal service support.'' We establish the following alternative designation process for temporary ETCs to provide the specific Lifeline support described in this *Order.*

16. Section 10 of the Act requires that the Commission forbear from applying any regulation or any provision of the Act to telecommunications services or telecommunications carriers if the Commission determines that the three conditions set forth in section 10(a) are satisfied. We find the requirements of section 10(a) are met to forbear from the ETC requirement until March 1, 2006, because of the limited and temporary nature of the support as well as the narrow application of the universal service support to only Lifeline customers. Section 10(a)(1) is satisfied because temporary forbearance from the ETC requirement will enhance the charges and practices of telecommunications carriers as it relates to Lifeline customers because it expands the scope of telecommunications services available to these consumers. Without such support, many of the affected consumers would be left with limited or no access to telecommunications services. In addition, because we specifically include a handset and a minimum of 300 minutes of wireless service and thus tailor the Lifeline support to the affected consumers, we do not believe that the additional safeguards afforded by the traditional ETC designation requirement are necessary for the protection of consumers. Thus, forbearance also satisfies section 10(a)(2). Further, under the alternative temporary ETC designation process that we establish herein, the Commission will review each offering to determine whether it complies with our requirements. This review will allow us to ensure that affected consumers are provided with affordable access to the telecommunications network. Finally, we find our actions here today to be most consistent with the public interest and determine that the additional safeguards afforded by ETC designation under section 214 work against the public interest in this limited circumstance. Under the normal designation process, carriers would be required to submit a detailed application that addresses not only the Lifeline assistance but also the other requirements of serving as an ETC. By streamlining the process, and expediting our review, we will enable carriers to provide access to telecommunications to affected consumers as quickly as possible. Thus, we find that section 10(a)(1) through (3) are satisfied and temporary and conditional forbearance is appropriate.

17. Carriers seeking to be designated a temporary ETC to offer the special Lifeline support described in this *Order* must submit to the Commission a detailed description of the plan, including how many and type of minutes offered, the brand and model of the handset(s), the carrier's licensed service area, and any limitations or conditions associated with the plans. In addition, consistent with the Commission's ETC precedent, the petition must include (1) a certification that the petitioner intends to offer Lifeline services to qualifying subscribers consistent with this *Order*; and (2) a description of how the petitioner intends to advertise the availability of the Lifeline service. Upon submission, the Commission will conduct an expedited review to ensure compliance with our rules. Within ten days, the Commission will determine whether the offering complies with this *Order* and whether the carrier will be temporarily designated as an ETC for purposes of providing the Lifeline support set out in this *Order*.

18. We acknowledge that some FEMA-eligible subscribers may already possess a handset and not need an additional handset. In those instances, and at the subscriber's discretion, the subscriber may opt against receiving a new handset and opt instead for a Lifeline-supported package of greater than 300 minutes and the ETC may still receive support not to exceed $130 for its Lifeline package. Further, it is acceptable for a carrier to offer a plan that includes a handset and a package of some greater amount of minutes (*e.g.*, 500, 750, or 1000 minutes or more) for the $130 in support. Additionally, a subscriber may opt for a plan that exceeds the $130 limit for a minimum of 300 minutes of use and a handset, but nevertheless use the $130 towards the higher minutes of use plus handset plan. This flexibility to the plan will allow eligible customers to purchase packages with more minutes of use, including packages that require the subscriber to pay any additional amount over the $130 threshold. Through this

temporary change to the federal Lifeline/Link-Up support program, it is our intent and purpose through this wireless option to give access to affected subscribers with no out-of-pocket costs. The eligible customer, however, may choose otherwise by, for example, forgoing the handset in exchange for more minutes of use.

19. We balance the need for quick and decisive action with our overarching goals of protecting the program from waste, fraud, and abuse. For that reason, we require applicants for the temporary Lifeline support pursuant to this *Order* to certify that they were residents of counties that are designated by FEMA as eligible for individual assistance, that they are the head of their household, and that they are only receiving one Lifeline special support package. Applicants seeking Link-Up support must certify that they were residents of counties that are designated by FEMA as eligible for individual assistance. We require ETCs receiving this temporary support to maintain all necessary documentation to verify that the support was used for the intended purpose of assisting victims of Hurricane Katrina. We also subject all ETCs receiving this temporary support to potential audit, and we require all carriers receiving $1 million or more of this support to undergo an audit or other investigatory review by the Commission's OIG (or the Administrator working under the oversight of the OIG) to verify the accuracy of all data submitted and that the support was used for intended purposes and to validate that the eligible telecommunications carrier has not obtained double-recovery from a single household.

20. We find this action necessary to assist in the Hurricane Katrina disaster relief effort. Offering temporary support for this wireless service consumer offering will not only assist in the recovery from the economic damages caused by the hurricane, but it will promote public safety by ensuring that disaster victims have ready access to E911 capabilities in the event of emergency. We stress that this temporary designation to operate as an ETC solely for this temporary support mechanism does not grant or otherwise deem the carrier an ETC for any other USF support mechanism. Nor does this temporary designation prejudge or suggest that any application currently pending or to be filed in the future with the state commissions or the Commission results in designation as an ETC.

C. Health Care Support

1. Need for and description of Temporary Order

21. In light of the compelling and unique circumstances caused by Hurricane Katrina, we find that it is necessary to adopt temporary order, pursuant to section 254(h)(2)(A), to provide public and nonprofit health care providers—in both non-rural and rural areas—in the affected areas and in areas where evacuees have relocated, as detailed below, with a 50 percent discount off the monthly cost of advanced telecommunications and information services necessary for the provision of health care services to victims of Hurricane Katrina. The temporary order discussed below applies to health care providers in the federally declared Hurricane Katrina disaster areas in the states of Alabama, Louisiana, and Mississippi and in areas where evacuees have relocated as detailed below. Specifically, all rural and non-rural nonprofit and public health care providers, as defined in § 54.601(a)(2), located within the states of Alabama, Louisiana, and Mississippi are eligible for this additional support. We establish different geographic eligibility criteria for the Health Care initiative because of the ability to use distance medicine applications to treat Hurricane Katrina victims. Furthermore, because the residents of the most devastated areas will likely have to relocate for an extended period of time, we expand eligibility for the purposes of the temporary order to the rural and non-rural nonprofit and public health care providers located in areas that are likely to receive most of the citizens evacuated from the hardest hit areas. Initial reports show these areas to include all counties in Texas and Arkansas that are contiguous with Louisiana and Mississippi; the counties of Escambia, Santa Rosa, Okaloosa, Walton, and Bay in Florida; the counties of Harris, Dallas, Tarrant and Bexar in Texas; the county of Pulaski in Arkansas; and the county of Shelby in Tennessee. In addition, we find that rural and non-rural health care providers outside of these areas may be eligible for support to the extent they serve a substantial number of the evacuees when compared to their usual number of patients. Health care providers that believe they are eligible under this standard should file a request with the Commission. We note that this temporary support does not extend to private or for-profit health care providers.

22. American Red Cross and other shelters are providing food, water, shelter and physical and mental health services to evacuees. Tens of thousands of people displaced from their homes have taken refuge in shelters in several states. Accordingly, for the purposes of the temporary order, we find it in the public interest that American Red Cross or other shelters that also offer medical services are eligible for funds as community health centers or community mental health centers to the extent they serve a significant number of disaster victims using advanced telecommunications and information services for telemedicine applications.

23. We also clarify that temporary or mobile health care providers are eligible for support under the 50 percent discount rule we adopt in this *Order.* As we noted in the *Rural Health Care Second Report and Order,* 70 FR 6365, February 7, 2005, mobile health care providers can provide essential health care services to underserved populations in remote locations. Given the extensive damage to many health care facilities due to Hurricane Katrina, we envision that the recovery and rebuilding effort will require the use of temporary mobile health facilities due to the lack of permanent health care facilities. Furthermore, many evacuees may be housed for some time in temporary shelters, and health care might be brought to these people via mobile health care providers. The receipt of universal service funding will better enable mobile health care providers to rapidly diagnose and treat patients in the affected areas. We find this rule to be in the public interest because it will provide maximum flexibility to mobile health care providers to use the most-effective technology to provide service to hurricane victims, whether it is satellite, wireline, or wireless. In the *Rural Health Care Second Report and Order*, we established a methodology for calculating support that established discounts for rural mobile health care providers at the difference between the rate for satellite service and the rate for an urban wireline service with a similar bandwidth. We find that such a calculation is not necessary here because, under the rules we adopt today, mobile health care providers will receive 50 percent discount off the cost of advanced telecommunications and information services.

24. In section 254 of the Telecommunications Act of 1996, Congress sought to provide rural health care providers ''an affordable rate for the services necessary for the purposes of telemedicine and instruction relating to such services.'' Specifically, Congress directed telecommunications carriers

''[to] provide telecommunications services which are necessary for the provision of health care services in a State, including instruction relating to such services, to any public or nonprofit health care provider that serves persons who reside in rural areas in that State at rates that are reasonably comparable to rates charged for similar services in urban areas in that State.'' Congress also provided the Commission with authority to enhance access to advanced telecommunications and information services for health care providers.

25. The Commission implemented this statutory directive by adopting the rural health care support mechanism in the *1997 Universal Service Order*, 62 FR 32862, June 7, 1997. In the *Rural Health Care Report and Order*, the Commission provided a 25 percent discount off the cost of monthly Internet access for eligible rural health care providers under section 254(h)(2)(A). Subsequently, on December 17, 2004, the Commission released a *Rural Health Care Second Report and Order*, 62 FR 32862, June 7, 1997, that, among other actions, changed the definition of ''rural'' for the purposes of the rural health care support mechanism. The Commission also expanded funding for mobile rural health care providers by subsidizing the difference between the rate for the satellite service and the rate for an urban wireline service with a similar bandwidth. In addition, on reconsideration, the Commission revised its rules to permit rural health care providers in states that are ''entirely rural'' to receive a 50 percent discount for advanced telecommunications and information services under section 254(h)(2)(A).

26. As the Commission has recognized in the past, access to advanced telecommunications services and information services presents the most efficient, cost-effective way to provide many telemedicine services. Specifically, telemedicine programs enable patients to receive health care services across distances that might otherwise be unaffordable, or physically impracticable or impossible to cross. For example, health care providers can use advanced telecommunications services to transmit x-rays and other medical information in real-time to doctors located in other areas for diagnosis and recommendations. Thus, patients benefit from access to timely health care services while they are spared the expense of lost wages and long-distance travel. In this instance, residents of the affected areas might be unable to travel for health care services because, for example, vehicles were lost in the flooding or gasoline is in short supply. Additionally, mobile health care providers can deliver cutting-edge technology and specialty care to citizens who are still living in areas that were damaged by the hurricane. These mobile clinics literally can mean the difference between life and death for many people who are unable to travel to see a physician. Furthermore, universal service support for advanced telecommunications and information services will enable health care providers in the affected areas to utilize their limited resources to provide additional care for hurricane victims and other patients.

27. We find that it is appropriate to adopt these rules on a temporary basis to expand funding to health care providers in the affected areas under section 254(h)(2)(A). As the Commission has determined in the past, we have the authority to provide funding for the provision of advanced telecommunications and information services under section 254(h)(2)(A). Section 254(h)(2)(A) allows the Commission to establish competitively neutral rules to enhance access to advanced telecommunications and information services for health care providers. Furthermore, section 254(h)(2)(A) gives the Commission broad discretionary authority to fulfill this statutory mandate. In prior orders, we have established rules under section 254(h)(2)(A) that further the Commission's mission of funding telecommunications and information services in order to promote telemedicine. By adopting the temporary order, therefore, we are working within the existing parameters of the rural health care program. We find that the circumstances caused by Hurricane Katrina create a special need for the Commission to use its discretion to provide universal service support to health care providers in the affected areas.

28. Section 254(h)(2)(A) allows the Commission to establish competitively neutral rules to enhance access to advanced telecommunications and information services to the extent those rules are technically feasible and economically reasonable. We find that providing universal service support as discussed herein is both technically feasible and economically reasonable. Access to these services is technically feasible because eligible health care facilities either are already being provided or were being provided advanced telecommunications and information services prior to the hurricane. In addition, the Commission's actions are economically feasible, in light of the circumstances. First, the temporary support is for a limited amount of services used for the express purpose of treating disaster victims, *i.e.*, advanced telecommunications and information services used in telemedicine applications. Second, we estimate that we would disburse approximately $28 million in support under the temporary order. The Commission has established a cap of $400 million for the rural health care support mechanism. Given that currently the program is disbursing about $30 million a year, we do not envision that the additional funding provided for in this Order will exceed the Commission's cap. We further note that we are not funding all telecommunications services, as provided for under 254(h)(1)(A), but only advanced telecommunications and information services that are used directly to provide telemedicine services to treat patients. Third, based on past experience, we believe a flat 50 percent discount is easy to administer and consistent with section 254(h)(5), which requires a specific, sufficient and predictable mechanism. Fourth, the 50 percent discount limits the amount of support per provider, provides incentives for health care providers to make prudent economic decisions concerning their telemedicine needs and will deter wasteful expenditures. Finally, we find that a 50 percent discount is slightly less than the average discount rural health care providers current receive for telecommunications services under section 254(h)(1)(A).

29. We find that both rural and non-rural health care providers in affected areas should be eligible for this temporary support. Section 254(h)(1)(A) limits support to health care providers in ''rural'' areas. In allowing the Commission discretion to establish competitively neutral rules to enhance access to advanced telecommunications and information services under section 254(h)(2)(A), however, Congress did not specifically limit such access to rural health care providers. Thus, we find that providing health care universal service support to public or nonprofit health care providers that are not necessarily serving ''rural areas,'' as defined in the 2004 *Rural Health Care Second Report and Order*, is consistent with federal court precedent and the mechanism's goal to provide health care providers with access to modern telecommunications for medical and health maintenance purposes. These areas have experienced the destruction of the telecommunications network infrastructure and the obliteration of many buildings, including homes,

medical, and other professional facilities, as well as the displacement of a significant percentage of the population. Therefore, we find that, in light of these extraordinary circumstances, both rural and non-rural health care providers are eligible to receive rural health care universal service support to serve the medical needs in the affected areas. Consistent with the Commission's principles of competitive neutrality, we find that eligible health care providers may receive discounts for any advanced telecommunications and information service, regardless of the platform as long as these services are used to treat disaster victims with telemedicine applications.

30. In administering the universal service fund, we must ensure that the goals of section 254 are met while preventing waste, fraud, and abuse. For this reason, health care providers seeking support pursuant to this Order shall certify that they meet the eligibility requirements outlined herein. We also note that our rules require applicants to select the most cost-effective, commercially available service. We will carefully monitor the use of funds disbursed to eligible entities under these new rules to ensure that all support is utilized in accordance with Commission rules, and to ensure that service providers do not charge unjust or unreasonable rates or seek to lock health care providers into long-term contracts beyond Funding Year 2005. We reserve the right to recover any monies not used for their intended purposes or, upon review, we determine were used wastefully.

2. Applicable Time Period

31. To qualify for this support, a health care provider should submit documentation to demonstrate that it used advanced telecommunications and information services for telemedicine applications and to treat victims of Hurricane Katrina. The health care provider should also certify that it used the services for the intended purposes. Such health care providers should comply with the program's document retention requirements and should maintain sufficient documentation to demonstrate the reasonableness of costs in light of the exigent circumstances. As noted above, all parties are subject to potential audit by the Commission's OIG (or the Administrator working under the OIG's oversight), and any party receiving more than $1 million in support will be automatically audited.

32. As noted below, the temporary order is effective immediately upon release of this *Order* and continues through the end of Funding Year 2005. Temporary health care support funding is available from August 29, 2005 until June 30, 2006, which is the end of Funding Year 2005. Further, all health care providers eligible under these new rules are permitted to amend their Funding Year 2005 applications to apply for additional support, no later than 60 days after the release of this *Order*. Applicants seeking support to obtain advanced telecommunications and information services for telemedicine applications used to treat victims of Hurricane Katrina should submit their FCC Form 465 postmarked no later than 60 days after release of this *Order*. Applicants should comply with all program rules and requirements, including the competitive bidding requirements.

D. Schools and Libraries Support

1. Need For and Description of Temporary Order

33. In this *Order*, we adopt temporary modifications to the schools and libraries universal service support mechanism to meet the needs of schools and libraries damaged by Hurricane Katrina. Approximately 600 schools and libraries in Alabama, Louisiana, and Mississippi may have been affected by the hurricane and subsequent flooding. Many schools and libraries in other states, although not damaged by the hurricane, have an influx of hurricane evacuee students (and library patrons). We are, on our own motion, waiving certain rules relating to the schools and libraries universal service support mechanism (commonly referred to as the E-rate program) on an emergency interim basis, as described below. Waiver of these rules will preserve and advance universal service by allowing schools and libraries in affected areas to restore quickly their ability to provide students and communities with needed telecommunications and information services.

34. Specifically, we (1) re-open the Funding Year 2005 filing window for schools and libraries, and consortia of schools and libraries, that were directly or indirectly affected by Hurricane Katrina; (2) treat all schools and libraries directly affected by Hurricane Katrina at the highest level of priority for Priority Two services (*i.e.*, 90 percent) for Funding Years 2005 and 2006; (3) allow affected parties in eligible counties/parishes in Alabama, Louisiana, and Mississippi to ''restart the clock'' for the purposes of calculating compliance with the ''two-in-five'' rule; (4) allow program participants in affected areas to substitute services or products in one broad category for another; and (5) allow schools and libraries serving displaced students and citizens to amend their Funding Year 2005 applications to account for the unexpected increase in population by filing a special supplementary FCC Form 471 request for additional funding.

35. In taking these actions, we balance the need for quick and decisive action to restore the provision of telecommunications and information services to schools and libraries with our overarching need to protect the program against waste, fraud, and abuse. We emphasize, however, that we will continue to be vigilant to ensure program integrity and to detect and deter waste, fraud, and abuse, and pursue enforcement action when appropriate. Our intent is not to allow double recovery for damages related to telecommunications and information services equipment funded under the schools and libraries universal service support mechanism. For this reason, schools and libraries affected by Hurricane Katrina requesting funding for the restoration of their telecommunications and information systems pursuant to the direction contained in this *Order* shall certify that the school or library incurred substantial damage as a result of Hurricane Katrina and that the services and products sought in their applications will be solely used to restore the network to the functional equivalent of the pre-Katrina degree of functionality (*i.e.*, prior to August 29, 2005) and that other resources (*e.g.*, insurance or public assistance monies provided by FEMA) are not available for restoration. In addition, schools and libraries affected by Hurricane Katrina shall certify that any alternative funding (*e.g.*, insurance payments, FEMA support, community resources) in excess of the cost for products or services requested on their applications will be returned to the federal Universal Service Fund. To the extent that schools and libraries are handling increased populations of evacuees, schools and libraries shall certify that: (1) There are more than a *de minimis* number of Hurricane Katrina victims; and (2) the entity experienced an associated increase in demand for supported services.

36. At the outset, we note that, in a number of instances, our rules explicitly provide participants in the schools and libraries program with specific requirements for requesting extensions of deadlines or waivers of certain Commission rules due to the occurrence of unforeseen events such as Hurricane

Katrina. Thus, we emphasize that the actions taken here do not represent the entirety of the relief that may be available to E-rate program participants in affected areas. We are committed to addressing all requests for hurricane assistance in an expeditious manner.

37. Under the Commission's rules, universal service funds are available to fund discounts for eligible schools and libraries and consortia of such eligible entities on a first-come, first-served basis. Each year, the Administrator implements an initial filing period that treats all schools and libraries filing within that period as if their applications were simultaneously received. The initial filing period begins on the date that the Administrator begins to receive applications for support, and concludes on a date to be determined by the Administrator.

38. In light of the extensive property damage, including damage to the telecommunications and information systems employed by participants in the schools and libraries universal service support mechanism, caused by Hurricane Katrina in the Gulf Coast states, we waive section 54.507(c) of our rules and re-open the Funding Year 2005 filing window for schools and libraries, and consortia of schools and libraries, that were directly or indirectly affected by Hurricane Katrina to the extent set forth in this *Order*. The filing window shall be open for sixty days following the date of release of this *Order*. By waiving § 54.507(c) of our rules, and reopening the filing window for Funding year 2005 for schools and libraries affected directly by Hurricane Katrina, affected program participants in Alabama, Louisiana, and Mississippi can begin repairing and restoring needed telecommunications and information services quickly and rapidly. Moreover, as described more fully below, we recognize that certain schools and libraries may require additional funding to support the needs of students and citizens displaced by Hurricane Katrina although they have not been directly affected by these events. Accordingly, for the reasons stated above, we find that due to this natural disaster, good cause exists for waiving § 54.507(c) for these schools and libraries and that such waiver is in the public interest.

39. Under the Commission's rules, eligible schools and libraries may receive discounts ranging from 20 percent to 90 percent of the pre-discount price of eligible services, based on indicators of need. Schools and libraries in areas with higher percentages of students eligible for free or reduced-price lunch through the National School Lunch Program (or a federally approved alternative mechanism) qualify for higher discounts for eligible services than applicants with low levels of eligibility for such programs. Schools and libraries located in rural areas also generally receive greater discounts. The Commission's priority rules provide that requests for telecommunications services, voice mail and Internet access for all discount categories shall receive first priority for the available funding (Priority One services). The remaining funds are allocated to requests for support for internal connections (Priority Two services), beginning with the most economically disadvantaged schools and libraries, as determined by the schools and libraries discount matrix. Currently, the most disadvantaged schools and libraries are eligible for a 90 percent discount on eligible services, and thus must pay only 10 percent of the cost of the service. To the extent funds remain after discounts are awarded to entities eligible for a 90 percent discount, the rules provide that the Administrator shall continue to allocate funds for discounts to applicants at each descending single discount percentage. The Commission's rules also provide that if sufficient funds do not exist to grant all requests within a single discount percentage, the Administrator shall allocate the remaining support on a pro rata basis over that single discount percentage level.

40. In light of the extensive property damage, including damage to the telecommunications and information systems employed by participants in the schools and libraries universal service support mechanism, caused by Hurricane Katrina in the Gulf Coast states, we find good cause to waive § 54.507 of our rules and treat all schools and libraries directly affected by Hurricane Katrina at the highest level of priority for Priority Two services (*i.e.*, 90 percent) for Funding Years 2005 and 2006. We recognize that program participants in Alabama, Louisiana, and Mississippi most affected by Hurricane Katrina may have need for an immediate indication of whether they are likely to receive funds for Priority Two services. By waiving § 54.507 of our rules, and treating all affected schools and libraries at the highest level of priority, affected program participants in Alabama, Louisiana, and Mississippi can fully anticipate the amount of funding they will receive from the universal service fund, and begin the task of developing a cogent, feasible, and sustainable plan to resume the provision of needed telecommunications and information services. We anticipate that treating all affected schools and libraries at the highest priority level could result in the disbursement of approximately $96 million in E-rate funds for the approximately 600 schools and libraries in Alabama, Louisiana, and Mississippi affected by Hurricane Katrina. We note that these funds have already been collected by the Universal Service Fund, and would not have an impact on the long-term viability of the universal service program. Accordingly, we find that good cause exists for waiving § 54.507 for affected entities and that such waiver is in the public interest.

41. We expect that the neediest schools and libraries will receive requested funding for Funding Year 2005 for both Priority One and Priority Two services. We note that, after applications from the disaster-struck schools and libraries are submitted and reviewed, we may be able to authorize funding nation-wide requests for any deferred requests for Priority Two internal connections service for Funding Year 2005. The Commission's rules require the Administrator to report the amount of unused funds available from prior funding years on a quarterly basis. Based on our past experience, significant funds are identified as available for use in future funding years. In fact, the E-rate Coordinators from Alabama, Louisiana, and Mississippi estimate that unused funds from prior funding years will be available to carry over for Funding Year 2005 and could be used to fund Hurricane Katrina restoration. Because we are re-opening the funding year 2005 filing window, such funds previously identified as unused by the Administrator may be available to provide support to the disaster-struck schools and libraries. We recognize that demand for services from the schools and libraries struck by Hurricane Katrina may vary after these entities complete their internal reviews and prepare the necessary program applications. We will closely monitor this situation and, to the extent unused funds from prior funding years are available, we anticipate that these funds will be used and that Priority Two funding may be available for additional applicants.

42. Finally, we note that the Commission requires that an entity must pay the entire undiscounted portion of the cost of any services it receives through the schools and libraries program. Moreover, our rules prohibit the provision of free services to an eligible entity by a service provider that is also providing discounted services to the entity. The Commission has

previously found that, for the purpose of this program, the provision of unrelated free services by a service provider to an eligible entity constitutes a rebate of the undiscounted portion of the costs of services, in violation of our rules. We clarify that to the extent schools and libraries receive FEMA assistance for projects, such assistance may be applied to the undiscounted portion of the bill. As part of our efforts to respond to the damage caused by Hurricane Katrina, we will continue to examine whether waiver of this rule is warranted to aid affected schools and libraries to restore the provision of service to students and communities.

43. Under the Commission's rules, eligible entities may receive commitments for discounts on Priority Two services (internal connections) no more than twice every five funding years (the ''two-in-five'' rule). For the purpose of determining eligibility, the five-year period may begin in any funding year in which the school or library receives discounted internal connections services other than basic maintenance services.

44. We find that due to the damage to information and telecommunications systems caused by Hurricane Katrina in the Gulf Coast states, many participants in the schools and libraries universal service support mechanism are likely to need to replace their internal connections services, and thus will seek commitments for discounts on Priority Two services despite already receiving such commitments in the recent past. For these entities, we waive our rule pertaining to the frequency of discounts for internal connections services to allow affected parties in Alabama, Louisiana, and Mississippi to ''restart the clock'' for the purposes of calculating compliance with the ''two-in-five'' rule. For such participants, Funding Year 2006 will thus serve as the first year of the five-year period for determining eligibility for funding for these services. We recognize that program participants in Alabama, Louisiana, and Mississippi affected by Hurricane Katrina may need funding to replace damaged or destroyed internal connections services, and should not be denied support payments simply due to the timing and frequency of previous requests for funding for internal connections. We limit this relief to schools and libraries in the Hurricane Katrina disaster area that incurred substantial damage as a result of the hurricane. Accordingly, for the reasons stated above, we find that due to this natural disaster, good cause exists for waiving § 54.506(c) for affected entities and that such waiver is in the public interest. To qualify for this waiver, parties should submit a request describing the damage incurred to the equipment that needs to be replaced.

45. Section 54.504(f) of the Commission's rules allows the Administrator to grant a request by an applicant to substitute a service or product for another where the service or product has the same functionality; the substitution does not violate any contract provisions or state or local procurement laws; the substitution does not result in an increase in the percentage of ineligible services or functions; and the applicant certifies that the requested change is within the scope of the controlling FCC Form 470. On our own motion, we waive the requirement that, for purposes of § 54.504(f), the substituted service or product must have the same functionality as the service it is replacing. Thus, program participants in affected areas may substitute services in one broad category (*e.g.*, telecommunications service, Internet access, and internal connections) for those in another. Along these same lines, we will permit the use of approved funds for any facilities or services that need to be replaced due to the natural disaster to the extent that they were initially funded under the program. We recognize that program participants in Alabama, Louisiana, and Mississippi affected by Hurricane Katrina may seek needed funding to replace damaged or destroyed services and equipment, and that it is in the public interest to allow the replacement of such services and equipment with funds previously granted for other services and equipment. Accordingly, we find that due to this natural disaster, good cause exists for waiving § 54.504(f) for affected entities and that such waiver is in the public interest. For any eligible school, library or consortium in affected areas, such service substitutions will be limited to funds received from applications from Funding Year 2005.

46. Certain schools, although not directly affected by Hurricane Katrina, may have been indirectly impacted nonetheless due to the influx of displaced students into their district. For example, additional students may make use of school services and resources in a manner originally unanticipated when the schools' technology plans were developed and funding requested, thereby taxing information and telecommunication services beyond their usual capability. In some instances, the addition of students displaced due to Hurricane Katrina may cause a school to become eligible for a higher discount level due to an increase in the percentage of the student body eligible for the National School Lunch Program. To provide an opportunity for schools to handle the unforeseen consequences of Hurricane Katrina and the influx of new students and patrons, we will allow schools and libraries serving displaced students and citizens to amend their Funding Year 2005 applications to account for the unexpected increase in population by filing a special supplementary FCC Form 471 request for additional funding. In accordance with our direction here, such schools may amend their original funding requests. We instruct the Schools and Libraries Division (''SLD'') of the Administrator to accept and immediately process requests for additional funding from such schools for sixty days following the date of this *Order*. We recognize that certain schools and libraries may need to adjust their requests for USF support in light of Hurricane Katrina even though they have not been directly damaged by these events. Accordingly, we find that due to this catastrophic natural disaster, good cause exists for waiving § 54.507(c) for these schools and libraries and that such waiver is in the public interest. Schools and libraries affected by Hurricane Katrina requesting additional funding to support the needs of displaced citizens shall submit a certification indicating the approximate number of additional students or citizens expected to be served by the telecommunications and information services, and that the services and products sought in their applications are necessary to serve these additional, unanticipated needs. We estimate that this increase in funding will be approximately $36 million. We note that these funds have already been collected and should not have an impact on the long-term viability of the universal service program.

47. Because we want to ensure the schools and libraries harmed by Hurricane Katrina receive targeted support, we direct the Administrator, in reviewing revised or supplemented requests for E-rate support, to determine whether the impact of Hurricane Katrina was *de minimis* (*e.g.*, a small number of students or patrons that necessitates no increased demand for supported services). Schools and libraries should not submit revised applications if they are getting a *de minimis* increase in students or patrons as a result of Hurricane Katrina. We recognize that this determination may depend upon specific facts and circumstances. Thus, applicants should submit the number of increased students and library patrons

(both pre-Hurricane Katrina and post-Hurricane Katrina) and certify that the number is accurate. We also require schools and libraries to maintain documentation in support of these increased numbers. We authorize the state E-rate coordinators for Alabama, Louisiana, and Mississippi to review e-rate applications to ensure that schools and libraries were substantially damaged and that their requests will be free of waste, fraud, and abuse. In addition, for those schools and libraries handling increased students/patron evacuees, we authorize these E-rate coordinators to review whether the schools/libraries are handling more than a *de minimis* number of increased students/patrons. We note that the state E-rate coordinators for Alabama, Mississippi, and Louisiana will coordinate the application process to limit the potential for waste, fraud, and abuse. We authorize this additional oversight review activity. We expect such review efforts would include verifying that schools and libraries in their states seeking this temporary relief meet the *de minimis* standard. We will carefully monitor the use of funds disbursed to ensure that all support is utilized in accordance with Commission rules, and to ensure that service providers do not charge unjust or unreasonable rates. We reserve the right to recover any monies not used for their intended purposes or, upon review, we determine were used wastefully.

2. Eligibility

48. The temporary order adopted and waivers granted herein apply to schools, libraries, and consortia of schools and libraries in the federally-declared Hurricane Katrina disaster areas in the states of Louisiana, Mississippi, and Alabama and in surrounding areas, for the counties/parishes designated by FEMA as eligible for individual assistance. Furthermore, because the residents of the most devastated areas will likely have to relocate for an extended period of time, we expand eligibility of funds from the schools and libraries support mechanism to schools and libraries (and consortia of eligible schools and libraries) located in areas that receive citizens evacuated from the hardest hit areas. Initial reports show these areas to include all counties in Texas and Arkansas that are contiguous with Louisiana and Mississippi; the counties of Escambia, Santa Rosa, Okaloosa, Walton, and Bay in Florida; the counties of Harris, Dallas, Tarrant and Bexar in Texas; the county of Pulaski in Arkansas; and the county of Shelby in Tennessee. Schools and libraries that believe they are eligible under this standard should retain documentation of the number of additional students and citizens to be supported by telecommunications and information services.

49. The E-rate Funding Year 2005 application window is reopened for certain schools, libraries, and consortia directly and indirectly affected by the hurricane, as set out above. The window reopens on the release date of this *Order* and closes 60 days after. Any application or amended application from an eligible school, library, or consortium, as discussed above, that is postmarked by 60 days after the release date of this *Order* will be deemed accepted as timely filed within the Funding Year 2005 window. For Funding Years 2005 and 2006, all eligible schools, libraries, or consortia, as discussed above, will be treated at the highest level of priority, or 90 percent, for Priority Two services. For all eligible schools, libraries, or consortia, as discussed above, the clock shall be restarted in terms of applying the two-in-five rule of receiving Priority Two services. Therefore, applicants that qualify for Priority Two services under this *Order* will be deemed to have Funding Year 2006 as their first funding year, for purposes of the two-in-five calculation. For any eligible school, library or consortium, as discussed above, service substitutions will be limited to funds received from applications from Funding Year 2005.

E. High-Cost Support

50. The high-cost program provides support to carriers (incumbent LECs as well as competitive carriers) operating in high-cost and rural areas. Under the Commission's rules, rural carriers receive support based on their embedded costs and non-rural carriers receive support based on forward-looking economic costs, as determined by the Commission's cost model. Federal high-cost model support is provided to non-rural carriers in states where costs exceed a nationwide cost benchmark. After the amount of support available in a state is determined, that support is ''targeted'' to high-cost wire centers. Section 254(e) of the Act provides that carriers receiving federal universal service support ''shall use that support only for the provision, maintenance, and upgrading of facilities and services for which the support is intended.'' The Commission has previously declined to establish ''elaborate rules for compliance with section 254(e)'' but, rather, has relied on the states, through the certification process, to ensure that carriers are using support for the purposes in which it is intended. Indeed, the Commission has stated that as long as the uses prescribed by the state are consistent with section 254(e), states should have the flexibility to decide how carriers use support provided by the federal non-rural high-cost mechanism.

51. The rules for the high-cost program therefore do not explicitly address the use of high-cost funds for disaster relief and restoration purposes but, instead, codify section 254(e)'s requirement that carriers shall use universal service support only for the provision, maintenance, and upgrading of facilities and services for which the support is intended. Here we determine such costs to be a purpose for which high-cost support is intended. In addition, we find that high-cost carriers currently operating in the disaster area are coping with enormous challenges. More than 200,000 customer lines remain out of service. Carriers sustained significant damage to their outside plant facilities and switching equipment, in some cases losing entire central offices. Because commercial power is not fully available, many carriers continue to operate on back-up power. We conclude that these carriers are now operating in an area like a high-cost area. We conclude that a clarification of the use restrictions in our rules is appropriate given the overwhelming public interest in assisting those high-cost areas struck by the worst natural disaster in the nation's history. This action does not provide additional support to high-cost carriers harmed by Hurricane Katrina and thus will not affect the size of the fund. It will, however, provide high-cost carriers with the flexibility to use some of their support to assist in disaster restoration. We therefore clarify that using high-cost support to repair and rebuild facilities and services damaged by Hurricane Katrina is consistent with the statutory directive contained in section 254(e). Alternatively, we waive Commission Rule 54.7 for the limited purposes discussed herein. To the extent necessary and for only the relief provided herein, we also forbear from section 254(e).

52. Carriers getting this support should certify that: (1) the carrier is serving in the area; and (2) the carrier incurred substantial damage as a result of Hurricane Katrina.

F. Other Issues

53. As we note in the sections above, we are working within the existing parameters of the low-income, health care, E-rate, and high-cost USF programs. Except where noted herein, we expect to apply all existing processes and procedures to those applying for

benefits. For example, schools and libraries would need to prepare technology plans, submit applications, and maintain documentation. Similarly, carriers seeking support for providing the supported wireless service consumer offering will seek reimbursement pursuant to the Commission's existing low-income rules. Those programs that have caps specified in the Commission's rules—*i.e.*, the $2.25 billion E-rate program and the $400 million rural health care program—will continue to operate under the existing caps and applicable rules. In addition, we take no steps to modify or change the Administrator's disbursement processes. All carriers and service providers receiving USF monies remain subject to audit, and we may recover funds that we later determine were used improperly. At this time, we do not anticipate a need to adopt any specific forms because of the temporary nature of these support initiatives; parties receiving benefits are required, however, to maintain all documentation needed to verify the accuracy of their applications and the amount of monies received. Nor do we anticipate requiring the Administrator to revise its quarterly filings, although the Commission may require supplemental or additional information on an as-needed basis consistent with our standard operating procedures. We also adopt safeguards tailored to these temporary support programs, including certification requirements, document retention requirements, eligibility criteria relying on FEMA determinations, and audits of disbursed funds.

54. On September 21, 2005, the Administrator filed a letter with the Commission, detailing certain implementation concerns regarding relief related to Hurricane Katrina. We note that many of the issues raised in that letter are addressed in the scope of this *Order*. Because we are applying the USF programs' existing processes and procedures to these initiatives, we do not anticipate significant administrative issues to implement. We recognize, however, that some implementation issues may arise. We therefore require the Administrator to work with the Wireline Competition Bureau to resolve any such issues (*e.g.*, the content of certifications) expeditiously. We note that the proposal of the E-rate coordinators from Alabama, Louisiana and Mississippi does not address schools and libraries affected by evacuees. We direct the Wireline Competition Bureau to coordinate with the E-rate coordinators of the states eligible for relief as a result of a substantial number of evacuees to develop review process comparable to that of the E-rate coordinators for Alabama, Louisiana and Mississippi.

55. In this *Order*, we adopt a number of measures to safeguard the USF from misuse of funds. In particular, we rely on the FEMA disaster designation and application processes to determine eligibility for the temporary support initiatives, and the checks and balances built into FEMA's internal controls and procedures to ensure parties that are ineligible for support are rejected. Similarly, we target the temporary support to the counties, parishes, and individuals that suffered the most from the worst natural disaster in the Nation's history. We also adopt specific certification and document retention requirements pertaining to this temporary support. In addition, all beneficiaries and service providers receiving these monies are subject to potential audit, and those that receive more than $1 million will automatically be audited by the Administrator to ensure the funds are used for their intended purposes. All eligible telecommunications carriers, service providers, or beneficiaries requesting support under this temporary order shall be subject to audit or investigation by the Commission's Office of Inspector General (''OIG''), or other authorized federal or state governmental agency and, upon request, must make available any documentation and records necessary to verify compliance with these rules. For the E-rate program, we also rely on the representations of the E-rate coordinators for Alabama, Mississippi, and Louisiana that they will coordinate the application process to limit the potential for waste, fraud, and abuse, and we authorize this additional oversight review activity. Finally, this support is temporary and limited for the purposes specified in this *Order*.

56. We also rely, however, on the existing safeguards and measures in the USF programs. Thus, to the extent recovery is sought from USF stakeholders, and such stakeholders do not make payments, they will be subject to our ''red light'' rule. Parties must still submit applications and maintain appropriate documentation, as required by the existing program rules. The Administrator will subject all applications to the normal review processes so that E-rate applications, for example, will go through the Program Integrity Assurance (''PIA'') review process and selective review procedures pursuant to the Administrator's standard operating procedures. All information collection efforts, document retention, and certification requirements that normally apply to applications for low-income, rural health care, high-cost, or E-rate support will continue to apply for these temporary USF support initiatives. We recognize that we have already initiated a proceeding to examine these procedures to determine what additional measures can be taken to further safeguard the USF from waste, fraud, and abuse.

57. We are committed to ensuring that the funds disbursed as a result of these temporary support initiatives are used for their intended purposes and that unscrupulous persons do not seek to gain from these disaster relief measures. Therefore, to the extent we find through audits or other means that funds were not used properly, we will require the Administrator to recover such funds through its normal processes. For the E-rate program, for example, we will continue to apply the recovery standard adopted in the *Schools and Libraries Fifth Report and Order*, 69 FR 55097, September 13, 2004. Thus, amounts disbursed ''in violation of the statute or a rule that implements the statute or a substantive program goal'' will be recovered in full. We emphasize that we retain the discretion to evaluate the uses of USF monies and to determine on a case-by-case basis that waste, fraud, or abuse of USF monies occurred and that recovery is warranted.

III. Effective Date

58. The waivers granted herein shall be effective upon the release date of this *Order*. The rule modifications or additions adopted herein shall be effective upon the release date of this *Order*. Pursuant to section 553(d)(3) of the Administrative Procedure Act, we find good cause to make these rule modifications or additions effective upon release of this *Order*. As explained above, Hurricane Katrina caused significant damage in Alabama, Louisiana, and Mississippi including flooding in some areas of these states and significant property damage and personal injury. The rule changes promulgated in this *Order* represent a critical step in facilitating the Nation's response to the disaster wrought by Hurricane Katrina. We note, moreover, that this *Order* does not mandate new burdens or obligations. Accordingly, no entity will be adversely affected by making the *Order* effective at the earliest possible date. We delegate authority to the Wireline Competition Bureau to work with the Universal Service Administrator to make the necessary programmatic changes to implement this *Order*.

59. Given the urgent need, the rules set forth herein shall take effect immediately upon release, and without prior public notice and comment. Section 553 of the Administrative Procedures Act (APA) permits any agency to implement a rule without public notice and opportunity for comment ''when the agency for good cause finds * * * that notice and public procedure thereon are impracticable, unnecessary, or contrary to the public interest.'' Commission rules permit us to render an *Order* effective upon release where good cause warrants. As a general matter, we firmly believe that public notice requirements are an essential component of our rulemaking process. We find, however, that while receipt of public comment clearly is necessary to the formulation of final rules, the devastation caused by Hurricane Katrina and the need for prompt attention for the victims of Hurricane Katrina present good cause to make this *Order* effective immediately upon release of this *Order*.

IV. Congressional Review Act

60. The Commission will send a copy of this *Order* in a report to Congress and the Government Accountability Office pursuant to the Congressional Review Act, see 5 U.S.C. 801(a)(1)(A). For the reasons stated herein, we find good cause for the rule changes made by this *Order* to take effect upon the release of this *Order*, *see* 5 U.S.C. 808(2).

V. Procedural Matters

61. This *Order* contains new and modified information collection requirements subject to the Paperwork Reduction Act of 1995 (PRA), Public Law 104–13. Pursuant to 5 CFR 1320.18(d), the Office of Management and Budget (OMB) has granted the Commission a temporary waiver of the PRA requirements for this rulemaking. Accordingly, this *Order* will not be submitted to OMB for review.

VI. Ordering Clauses

62. Pursuant to the authority contained in sections 4(i), 4(j), 10, 201–205, 214, 254, 303(r), and 403 of the Communications Act of 1934, as amended, 47 U.S.C. 151, 154(i), 154(j), 160, 201–205, 214, 254, 303(r), and 403 this *Order* is adopted, and the temporary *Order* shall become effective immediately upon release of this *Order*, pursuant to 5 U.S.C. 408, 553(d)(3), 47 U.S.C. 408, 553(d)(3).

63. Pursuant to 4(i) and 251(e) of the Communications Act of 1934, as amended, 47 U.S.C. 154(i) and 251(e), and §§ 1.1 and 1.3 of the Commission's rules, 47 CFR 1.1 and 1.3, that our procedural rules relating to the universal service fund are waived to the extent herein described.

64. Pursuant to sections 1, 4(i), 251(b)(2), and 251(e) of the Communications Act of 1934, as amended, 47 U.S.C. 151, 154(i), 251(b)(2) and 251(e), and § 1.3 of the Commission's rules, 47 CFR 1.3, that § 54.603(b)(3) of the Commission's rules is waived to the extent herein described.

Federal Communications Commission.

Marlene H. Dortch,

Secretary.

[FR Doc. 05–21728 Filed 10–31–05; 8:45 am]

BILLING CODE 6712–01–P

DEPARTMENT OF COMMERCE

National Oceanic and Atmospheric Administration

50 CFR Part 660

[Docket No. 050302053–5120–03; I.D. 042605G]

RIN 0648–AT38

Fisheries Off West Coast States and in the Western Pacific; Pacific Coast Groundfish Fishery; Spiny Dogfish; Open Access; Routine Management Measure; Closure Authority

AGENCY: National Marine Fisheries Service (NMFS), National Oceanic and Atmospheric Administration (NOAA), Commerce.

ACTION: Emergency rule and extension of expiration date.

SUMMARY: This action extends an emergency rule, now in effect, that establishes routine management measure authority, under the Pacific Coast Groundfish Fishery Management Plan (Pacific Coast Groundfish FMP), to reduce trip limits to incidental levels in the open access fishery for groundfish before the sector has taken its full target groundfish species' allocations, to minimize impacts on overfished species. The mechanism established by this action is necessary to quickly restrict the directed open access groundfish fishery if NMFS estimates that the incidental catch of an overfished species is too high.

DATES: The amendments in this rule are effective November 1, 2005, through May 1, 2006, except for § 660.383(f), which is effective November 1, 2005. The expiration date of the emergency rule published on May 5, 2005 (70 FR 23804) is extended until May 1, 2006.

ADDRESSES: Copies of the Final Environmental Impact Statement (FEIS) for the harvest specifications and management measures for the 2005–2006 groundfish fisheries are available from Donald McIsaac, Executive Director, Pacific Fishery Management Council (Council), 7700 NE Ambassador Place, Portland, OR 97220, phone: 503–820–2280. Copies of the Record of Decision, final regulatory flexibility analysis (FRFA), and the Small Entity Compliance Guide for the groundfish harvest specifications for 2005–2006 are available from D. Robert Lohn, Administrator, Northwest Region (Regional Administrator), NMFS, 7600 Sand Point Way, NE, Seattle, WA 98115–0070.

FOR FURTHER INFORMATION CONTACT: Yvonne deReynier (Northwest Region, NMFS), phone: 206–526–6129; fax: 206–526–6736 and; e-mail: *yvonne.dereynier@noaa.gov*.

SUPPLEMENTARY INFORMATION:

Electronic Access

This rule is accessible via the Internet at the Office of the **Federal Register**'s Web site at *http://www.access.gpo.gov/su_docs/aces/aces140.html*. Background information and documents are available at the NMFS Northwest Region Web site at *http://www/nwr.noaa.gov/1sustfsh/gdfsh01.htm* and at the Council's Web site at *http://www.pcouncil.org*.

Background

On May 5, 2005, NMFS published an emergency rule (70 FR 23804) establishing bycatch limits of 1.0 mt of canary rockfish and 0.6 mt of yelloweye rockfish for the directed open access fishery for groundfish. If those limits were estimated to be achieved inseason, the trip limit levels for the open access fishery would be reduced via NMFS automatic action at § 660.370(d) to a level that would accommodate incidental catch in the non-directed open access fishery. This emergency rule implemented a provision setting the incidental trip limit level for the open access fishery at 200 lb (90.7 kg) of groundfish per month.

The impetus for this emergency rule was a high capacity freezer-longliner announcing its intent to join the open access fishery for spiny dogfish. Historical data indicated that traditional dogfish longliners operating off the Washington coast have had incidental catch of canary and yelloweye rockfish that concerned the agency. When applied to the expected catch of spiny dogfish by that a high-capacity vessel inexperienced with operating in northern West Coast waters, these bycatch rates could have jeopardized the optimum yields (OYs) for these

overfished rockfish bycatch species. Bycatch limits for the directed open access fishery were intended to ensure that any increased open access harvest levels that could result from the participation of any high capacity vessels in the open access fishery would not jeopardize either overfished species' OYs or the availability of incidental overfished species catch in fisheries other than the directed open access fishery.

The Council reviewed NMFS's action at its June 13–17, 2005, meeting and recommended raising the open access bycatch limits for canary and yelloweye rockfish to 3.0 mt each. The Council also determined that a more direct way of addressing the potential for canary and yelloweye rockfish bycatch in the open access fisheries would be to review the need for spiny dogfish trip limits. Thus, the Council has been following the groundfish fishery management plan's (FMP's) procedures for establishing new routine management measures by considering dogfish trip limits at its September and November 2005 Council meetings. Once the Council finalizes its decision on whether to implement spiny dogfish trip limits, NMFS will publish a proposed rule to send the Council's action out for public review and comment.

NMFS implemented the Council recommendation to set annual canary and yelloweye rockfish bycatch limits for the open access fishery at 3.0 mt each via an inseason action published on July 5, 2005 (70 FR 38596.) Therefore, NMFS is both renewing this emergency action through May 1, 2006, and re-publishing the Council-recommended annual open access bycatch limits for canary and yelloweye rockfish at 3.0 mt each. NMFS anticipates publishing a proposed rule to implement spiny dogfish trip limits in late 2005.

Additional information concerning the open access fisheries for groundfish may be found in the EIS for the 2005–2006 West Coast groundfish harvest specifications and management measures. NMFS provided a 30–day comment period on both the emergency rule published on May 5 and on the inseason action published on July 5, 2005. No comments were received on either action. Extension of this emergency rule is authorized under section 305(c)(3)(B) of the Magnuson-Stevens Fishery Conservation and Management Act (Magnuson-Stevens Act).

Classification

The Assistant Administrator for Fisheries, NOAA (AA,) has determined that this extension is needed to prevent the canary and yelloweye rockfish OYs from being exceeded in either 2005 or 2006. Both of these species are overfished and are managed under rebuilding plans. This emergency rule needs to be extended in order to address concerns that high-capacity entrants to the directed open access fisheries could jeopardize the OYs for canary and yelloweye rockfish, and thereby take away fishing opportunities from hundreds of other commercial vessels and thousands of recreational vessels that also take these species incidentally. Maintaining the 2005–2006 bycatch limits set by the emergency rule (70 FR 23804, May 5, 2005,) will serve to protect canary and yelloweye rockfish from overharvest for the remainder of 2005 and in the early part of 2006. Accordingly, the AA is extending the expiration date of this emergency rule until May 1, 2006.

List of Subjects in 50 CFR Part 660

Administrative practice and procedure, American Samoa, Fisheries, Fishing, Guam, Hawaiian Natives, Indians, Northern Mariana Islands, Reporting and recordkeeping requirements.

Dated: October 25, 2005.

John Oliver,

Deputy Assistant Administrator for Operations, National Marine Fisheries Service.

■ For the reasons set out in the preamble, 50 CFR part 660 is amended as follows:

PART 660—FISHERIES OFF WEST COAST STATES AND IN THE WESTERN PACIFIC

■ 1. The authority citation for part 660 continues to read as follows:

Authority: 16 U.S.C. 1801 *et seq.*

■ 2. In § 660.370, paragraph (c)(1)(iv) is added and paragraph (i) is revised to read as follows:

§ 660.370 Specifications and management measures.

* * * * *

(c) * * *

(1) * * *

(iv) *Differential trip landing limits and frequency limits based on gear type, closed seasons.* Trip landing and frequency limits that differ by gear type and closed seasons may be imposed or adjusted on a biennial or more frequent basis for the purpose of rebuilding and protecting overfished or depleted stocks. To achieve the rebuilding of an overfished or depleted stock, the Pacific whiting primary seasons described at § 660.373(b), may be closed for any or all of the fishery sectors identified at § 660.373 (a) before the sector allocation is reached if any of the bycatch limits identified at § 660.373(b)(4) are reached. To achieve the rebuilding of an overfished or depleted stock, groundfish trip limits in the open access fishery may be reduced to an incidental level if any of the bycatch limits identified at § 660.383(f) are reached.

* * * * *

(i) *Automatic actions.* Automatic management actions may be initiated by the NMFS Regional Administrator without prior public notice, opportunity to comment, or a Council meeting. These actions are nondiscretionary, and the impacts must have been taken into account prior to the action. Unless otherwise stated, a single notice will be published in the **Federal Register** making the action effective if good cause exists under the APA to waive notice and comment. Automatic actions are used in the Pacific whiting fishery to close the fishery or reinstate trip limits when a whiting harvest guideline, commercial harvest guideline, or a sector's allocation is reached, or is projected to be reached; or to reapportion unused allocation to other sectors of the fishery. An automatic action may also be used in the open access fishery to reduce groundfish trip limits to an incidental level when overfished species bycatch limits at § 660.383(f) are reached.

■ 3. In § 660.383, paragraph (f) is revised to read as follows:

§ 660.383 Open access fishery management measures.

* * * * *

(f) *2005 and 2006 bycatch limits in the directed open access fishery.* Bycatch limits for the directed open access fishery may be used inseason to reduce overall groundfish trip limits to incidental levels to achieve the rebuilding of an overfished or depleted stock, under routine management measure authority at § 660.370(c)(1)(ii). These limits are routine management measures under § 660.370(c) and, as such, may be adjusted inseason or may have new species added to the list of those with bycatch limits. For 2005 and 2006, the directed open access fishery bycatch limits are 3.0 mt of canary rockfish and 3.0 mt of yelloweye rockfish in each year. Under automatic action authority at § 660.370(d), if either of these limits is reached, groundfish trip limits will be reduced to an incidental level. Under this authority, reducing groundfish trip limits to an incidental level means that any vessel operating off the West Coast that is not registered for use with a limited entry

permit will be constrained to a trip limit for all groundfish, excluding Pacific whiting of no more than 200 lb (90.7 kg) per month.

[FR Doc. 05–21618 Filed 10–31–05; 8:45 am]

BILLING CODE 3510–22–S

DEPARTMENT OF COMMERCE

National Oceanic and Atmospheric Administration

50 CFR Part 679

[Docket No. 041126333–5040–02; I.D. 102605A]

Fisheries of the Exclusive Economic Zone Off Alaska; Pollock in Statistical Area 630 of the Gulf of Alaska

AGENCY: National Marine Fisheries Service (NMFS), National Oceanic and Atmospheric Administration (NOAA), Commerce.

ACTION: Temporary rule; modification of a closure.

SUMMARY: NMFS is opening directed fishing for pollock in Statistical Area 630 of the Gulf of Alaska (GOA) for 24 hours. This action is necessary to fully use the 2005 total allowable catch (TAC) of pollock specified for Statistical Area 630.

DATES: Effective 1200 hrs, Alaska local time (A.l.t.), October 27, 2005, through 1200 hrs, A.l.t., October 28, 2005.

FOR FURTHER INFORMATION CONTACT: Josh Keaton, 907–586–7228.

SUPPLEMENTARY INFORMATION: NMFS manages the groundfish fishery in the GOA exclusive economic zone according to the Fishery Management Plan for Groundfish of the Gulf of Alaska (FMP) prepared by the North Pacific Fishery Management Council under authority of the Magnuson-Stevens Fishery Conservation and Management Act. Regulations governing fishing by U.S. vessels in accordance with the FMP appear at subpart H of 50 CFR part 600 and 50 CFR part 679.

NMFS closed the directed fishery for pollock in Statistical Area 630 of the GOA under § 679.20(d)(1)(iii) on October 8, 2005 (70 FR 59676, October 13, 2005). NMFS reopened directed fishing for pollock in Statistical Area 630 of the GOA for 48 hours under 679.25(a)(2)(i)(C) and (a)(2)(iii)(D) on October 17, 2005 (70 FR 61067, October 20, 2005).

NMFS has determined that approximately 588 mt of pollock remain in the directed fishing allowance. Therefore, in accordance with § 679.25(a)(2)(i)(C) and (a)(2)(iii)(D), and to fully utilize the 2005 TAC of pollock in Statistical Area 630, NMFS is terminating the previous closure and is reopening directed fishing for pollock in Statistical Area 630 of the GOA. In accordance with § 679.20(d)(1)(iii), the Regional Administrator finds that the directed fishing allowance for pollock in Statistical Area 630 of the GOA will be reached after 24 hours. Consequently, NMFS is prohibiting directed fishing for pollock in Statistical Area 630 of the GOA effective 1200 hrs, A.l.t., October 28, 2005.

Classification

This action responds to the best available information recently obtained from the fishery. The Assistant Administrator for Fisheries, NOAA (AA), finds good cause to waive the requirement to provide prior notice and opportunity for public comment pursuant to the authority set forth at 5 U.S.C. 553(b)(B) as such requirement is impracticable and contrary to the public interest. This requirement is impracticable and contrary to the public interest as it would prevent NMFS from responding to the most recent fisheries data in a timely fashion and would delay the opening of pollock in Statistical Area 630 of the GOA. NMFS was unable to publish a notice providing time for public comment because the most recent, relevant data only became available as of October 25, 2005.

The AA also finds good cause to waive the 30–day delay in the effective date of this action under 5 U.S.C. 553(d)(3). This finding is based upon the reasons provided above for waiver of prior notice and opportunity for public comment.

This action is required by § 679.20 and is exempt from review under Executive Order 12866.

Authority: 16 U.S.C. 1801 *et seq.*

Dated: October 26, 2005.

Ann M. Lange,

Acting Director, Office of Sustainable Fisheries, National Marine Fisheries Service.

[FR Doc. 05–21773 Filed 10–27–05; 4:02 pm]

BILLING CODE 3510–22–S

Proposed Rules

Federal Register
Vol. 70, No. 210
Tuesday, November 1, 2005

This section of the FEDERAL REGISTER contains notices to the public of the proposed issuance of rules and regulations. The purpose of these notices is to give interested persons an opportunity to participate in the rule making prior to the adoption of the final rules.

DEPARTMENT OF TRANSPORTATION

Federal Aviation Administration

14 CFR Part 39

[Docket No. FAA–2005–22813; Directorate Identifier 2002–NM–117–AD]

RIN 2120–AA64

Airworthiness Directives; AvCraft Dornier Model 328–100 Airplanes

AGENCY: Federal Aviation Administration (FAA), Department of Transportation (DOT).

ACTION: Notice of proposed rulemaking (NPRM).

SUMMARY: The FAA proposes to revise an existing airworthiness directive (AD) that applies to all AvCraft Dornier Model 328–100 airplanes. The existing AD currently requires revising the Airplane Flight Manual (AFM) to provide the flightcrew with additional information regarding procedures to ensure complete pressurization of the hydraulic lines for the flaps. The existing AD also requires, for certain airplanes, modification of the flap actuators of the flight controls. This proposed AD would allow the removal of the AFM revisions after modifying the flap actuators of the flight controls. This proposed AD results from the determination that the AFM revisions are not necessary after modifying the flap actuators of the flight controls. We are proposing this AD to prevent an uncommanded retraction of the flaps during takeoff, which could result in an aborted takeoff and consequent potential for runway overrun.

DATES: We must receive comments on this proposed AD by December 1, 2005.

ADDRESSES: Use one of the following addresses to submit comments on this proposed AD.

- DOT Docket Web site: Go to *http://dms.dot.gov* and follow the instructions for sending your comments electronically.
- Government-wide rulemaking Web site: Go to *http://www.regulations.gov* and follow the instructions for sending your comments electronically.
- Mail: Docket Management Facility; U.S. Department of Transportation, 400 Seventh Street, SW., Nassif Building, Room PL–401, Washington, DC 20590.
- Fax: (202) 493–2251.
- Hand Delivery: Room PL–401 on the plaza level of the Nassif Building, 400 Seventh Street, SW., Washington, DC, between 9 a.m. and 5 p.m., Monday through Friday, except Federal holidays.

Contact AvCraft Aerospace GmbH, P.O. Box 1103, D–82230 Wessling, Germany, for service information identified in this proposed AD.

FOR FURTHER INFORMATION CONTACT: Rosanne Ryburn, Aerospace Engineer, International Branch, ANM–116, FAA, Transport Airplane Directorate, 1601 Lind Avenue, SW., Renton, Washington 98055–4056; telephone (425) 227–2139; fax (425) 227–1149.

SUPPLEMENTARY INFORMATION:

Comments Invited

We invite you to submit any relevant written data, views, or arguments regarding this proposed AD. Send your comments to an address listed in the **ADDRESSES** section. Include the docket number ''Docket No. FAA–2005–22813; Directorate Identifier 2002–NM–117–AD'' at the beginning of your comments. We specifically invite comments on the overall regulatory, economic, environmental, and energy aspects of the proposed AD. We will consider all comments received by the closing date and may amend the proposed AD in light of those comments.

We will post all comments we receive, without change, to *http://dms.dot.gov*, including any personal information you provide. We will also post a report summarizing each substantive verbal contact with FAA personnel concerning this proposed AD. Using the search function of that web site, anyone can find and read the comments in a docket, including the name of the individual who sent the comment (or signed the comment on behalf of an association, business, labor union, etc.). You may review the DOT's complete Privacy Act Statement in the **Federal Register** published on April 11, 2000 (65 FR 19477–78), or you may visit *http://dms.dot.gov*.

Examining the Docket

You may examine the AD docket on the Internet at *http://dms.dot.gov*, or in person at the Docket Management Facility office between 9 a.m. and 5 p.m., Monday through Friday, except Federal holidays. The Docket Management Facility office (telephone (800) 647–5227) is located on the plaza level of the Nassif Building at the DOT street address stated in the **ADDRESSES** section. Comments will be available in the AD docket shortly after the Docket Management System receives them.

Discussion

On November 20, 2000, we issued AD 2000–24–03, amendment 39–12010 (65 FR 75601, December 4, 2000), for all Dornier Model 328–100 series airplanes. That AD requires revising the Airplane Flight Manual (AFM) to provide the flightcrew with additional information regarding procedures to ensure complete pressurization of the hydraulic lines for the flaps. That AD also requires, for certain airplanes, modification of the flap actuators of the flight controls. That AD resulted from the development of a hardware modification to install a locking collar and locking sleeve at the actuator cylinder. We issued that AD to prevent an uncommanded retraction of the flaps during takeoff, which could result in an aborted takeoff and consequent potential for runway overrun.

Actions Since Existing AD Was Issued

Since we issued AD 2000–24–03, we determined that the AFM revisions are not necessary after modifying the flap actuators of the flight controls. The modification specified in paragraph (c) of that AD is currently written as an additional requirement for certain airplanes to the revisions specified in paragraphs (a) and (b) of the AD. The modification specified in paragraph (c) of that AD is intended to be a terminating action for the revisions specified in paragraphs (a) and (b) of the AD.

FAA's Determination and Requirements of the Proposed AD

This airplane model is manufactured in Germany and is type certificated for operation in the United States under the provisions of section 21.29 of the Federal Aviation Regulations (14 CFR 21.29) and the applicable bilateral airworthiness agreement. We have determined that AD action is necessary for airplanes of this type design that are

certificated for operation in the United States.

This proposed AD would revise AD 2000–24–03 and would retain the requirements of the existing AD. This proposed AD would also allow operators to remove the AFM revisions inserted according to paragraphs (a) and (b) of that AD after operators modified the flap actuators of the flight controls according to paragraph (c) of that AD.

Change to Existing AD

This proposed AD would retain all requirements of AD 2000–24–03. Since AD 2000–24–03 was issued, the AD format has been revised, and certain paragraphs have been rearranged. As a result, the corresponding paragraph identifiers have changed in this proposed AD, as listed in the following table:

REVISED PARAGRAPH IDENTIFIERS

Requirement in AD 2000–24–03	Corresponding requirement in this proposed AD
Paragraph (a)	Paragraph (f).
Paragraph (b)	Paragraph (g).
Paragraph (c)	Paragraph (h).

Explanation of Change to Applicability

We have revised the applicability of the existing AD to identify model designations as published in the most recent type certificate data sheet for the affected models.

Clarification of Alternative Method of Compliance (AMOC) Paragraph

We have revised this action to clarify the appropriate procedure for notifying the principal inspector before using any approved AMOC on any airplane to which the AMOC applies.

Costs of Compliance

We estimate that 52 airplanes of U.S. registry would be affected by this AD.

The AFM revision that is currently required by AD 2000–24–03, and retained in this proposed AD, takes approximately 1 work hour per airplane to accomplish, at an average labor rate of $65 per work hour. Based on these figures, the cost impact of the currently required AFM revision on U.S. operators is approximately $3,380, or $65 per airplane.

The modification that is currently required by AD 2000–24–03 and retained in this proposed AD, takes approximately 4 work hours per airplane to accomplish, at an average labor rate of $65 per work hour. Required parts will be provided by the manufacturer at no cost to the operators. Based on these figures, the cost impact of the currently required modification on U.S. operators is estimated to be $260 per airplane.

The removal of the AFM revisions that is specified in this proposed AD, if done, takes approximately 1 work hour per airplane to accomplish, at an average labor rate of $65 per work hour. Based on these figures, the cost impact of the proposed removal of AFM revisions on U.S. operators is approximately $65 per airplane.

Authority for This Rulemaking

Title 49 of the United States Code specifies the FAA's authority to issue rules on aviation safety. Subtitle I, section 106, describes the authority of the FAA Administrator. Subtitle VII, Aviation Programs, describes in more detail the scope of the Agency's authority.

We are issuing this rulemaking under the authority described in subtitle VII, part A, subpart III, section 44701, ''General requirements.'' Under that section, Congress charges the FAA with promoting safe flight of civil aircraft in air commerce by prescribing regulations for practices, methods, and procedures the Administrator finds necessary for safety in air commerce. This regulation is within the scope of that authority because it addresses an unsafe condition that is likely to exist or develop on products identified in this rulemaking action.

Regulatory Findings

We have determined that this proposed AD would not have federalism implications under Executive Order 13132. This proposed AD would not have a substantial direct effect on the States, on the relationship between the national Government and the States, or on the distribution of power and responsibilities among the various levels of government.

For the reasons discussed above, I certify that the proposed regulation:

1. Is not a ''significant regulatory action'' under Executive Order 12866;

2. Is not a ''significant rule'' under the DOT Regulatory Policies and Procedures (44 FR 11034, February 26, 1979); and

3. Will not have a significant economic impact, positive or negative, on a substantial number of small entities under the criteria of the Regulatory Flexibility Act.

We prepared a regulatory evaluation of the estimated costs to comply with this proposed AD and placed it in the AD docket. See the **ADDRESSES** section for a location to examine the regulatory evaluation.

List of Subjects in 14 CFR Part 39

Air transportation, Aircraft, Aviation safety, Safety.

The Proposed Amendment

Accordingly, under the authority delegated to me by the Administrator, the FAA proposes to amend 14 CFR part 39 as follows:

PART 39—AIRWORTHINESS DIRECTIVES

1. The authority citation for part 39 continues to read as follows:

Authority: 49 U.S.C. 106(g), 40113, 44701.

§ 39.13 [Amended]

2. The Federal Aviation Administration (FAA) amends § 39.13 by removing amendment 39–12010 (65 FR 75601, December 4, 2000) and adding the following new airworthiness directive (AD):

AvCraft Aerospace GmbH (Formerly Fairchild Dornier GmbH): Docket No. FAA–2005–22813; Directorate Identifier 2002–NM–117–AD.

Comments Due Date

(a) The FAA must receive comments on this AD action by December 1, 2005.

Affected ADs

(b) This AD revises AD 2000–24–03.

Applicability

(c) This AD applies to all AvCraft Dornier Model 328–100 airplanes, certificated in any category.

Unsafe Condition

(d) This AD results from the determination that certain Airplane Flight Manual (AFM) revisions are not necessary after modifying the flap actuators of the flight controls. We are issuing this AD to prevent an uncommanded retraction of the flaps during takeoff, which could result in an aborted takeoff and consequent potential for runway overrun.

Compliance

(e) You are responsible for having the actions required by this AD performed within the compliance times specified, unless the actions have already been done.

Airplane Flight Manual (AFM) Revision

(f) Within 14 days after November 12, 1998 (the effective date of AD 98–22–07, amendment 39–10854), accomplish the requirements of paragraphs (f)(1) and (f)(2) of this AD.

(1) Revise the Normal Procedures Section of the Dornier 328 FAA-approved AFM to include the information specified in pages 6 and 7 of Dornier 328 All Operators Telefax (AOT) AOT–328–27–016, dated July 31, 1998. This may be accomplished by inserting a copy of pages 6 and 7 of the AOT into the AFM.

(2) Revise the Abnormal Procedures Section of the Dornier 328 FAA-approved

AFM to include the information specified in page 4 of Dornier 328 AOT–328–27–016, dated July 31, 1998. This may be accomplished by inserting a copy of page 4 of the AOT into the AFM.

New AFM Revision

(g) For all airplanes: Within 3 days after January 8, 2001 (the effective date of AD 2000–24–03), revise the Dornier 328 FAA-approved AFM as specified in paragraphs (g)(1) and (g)(2) of this AD. Concurrently with this AFM revision, remove the AFM revisions required by paragraph (f) of this AD from the AFM.

(1) Revise the Normal Procedures Section to include the information specified in pages 4, 5, and 6 of Dornier 328 AOT–328–27–016, Revision 1, dated October 28, 1998. This may be accomplished by inserting a copy of pages 4, 5, and 6 of the AOT into the AFM.

(2) Revise the Abnormal Procedures Section to include the information specified in page 3 of Dornier 328 AOT–328–27–016, Revision 1, dated October 28, 1998. This may be accomplished by inserting a copy of page 3 of the AOT into the AFM.

Modification

(h) For airplanes with serial numbers 3005 through 3099 inclusive, 3101 through 3108 inclusive, and 3110 through 3119 inclusive: Within 5 months after January 8, 2001, modify the flap actuators of the flight controls, in accordance with Dornier 328 Service Bulletin SB–328–27–293, dated November 10, 1999. After accomplishing the modification, operators may remove the AFM revisions required by paragraphs (f) and (g) of this AD from the AFM.

Note 1: The Dornier service bulletin references Liebherr Aerospace Service Bulletin 1048A–27–02, dated November 9, 1999, as an additional source of service information for accomplishing the modification of the flap actuators of the flight controls.

Alternative Methods of Compliance (AMOCs)

(i)(1) The Manager, International Branch, ANM–116, FAA, Transport Airplane Directorate, has the authority to approve AMOCs for this AD, if requested in accordance with the procedures found in 14 CFR 39.19.

(2) Before using any AMOC approved in accordance with 14 CFR 39.19 on any airplane to which the AMOC applies, notify the appropriate principal inspector in the FAA Flight Standards Certificate Holding District Office.

(3) AMOCs approved previously in accordance with AD 98–22–07, amendment 39–10854, are approved as AMOCs with paragraph (f) of this AD.

(4) AMOCs approved previously in accordance with AD 2000–24–03, amendment 39–12010, are approved as AMOCs with this AD.

Related Information

(j) German airworthiness directive 1998–359/3, dated April 6, 2000, also addresses the subject of this AD.

Issued in Renton, Washington, on October 20, 2005.

Kalene C. Yanamura,

Acting Manager, Transport Airplane Directorate, Aircraft Certification Service.

[FR Doc. 05–21697 Filed 10–31–05; 8:45 am]

BILLING CODE 4910–13–P

DEPARTMENT OF TRANSPORTATION

Federal Aviation Administration

14 CFR Part 121

[Docket No. FAA–2005–22449]

RIN 2120–AI16

Flightdeck Door Monitoring and Crew Discreet Alerting Systems

AGENCY: Federal Aviation Administration (FAA), DOT.

ACTION: Notice of proposed rulemaking; correction.

SUMMARY: This document corrects the preamble to a proposed rule published in the **Federal Register** on September 21, 2005, regarding flightdeck door monitoring and crew discreet alerting systems. This correction adds two vendors that sell video camera systems to the ones cited in the preamble.

FOR FURTHER INFORMATION CONTACT: Allen A. Mattes, Office of Aviation Policy and Plans, telephone; (202) 267–3412.

Correction

In the proposed rule FR Doc. 05–18806 published on September 21, 2005, (70 FR 55492) make the following correction:

1. On page 55495 for the proposed rule, in the second column, fourth paragraph, replace the contents of the paragraph with the following:

''Certificate holders that choose to install a video camera system to comply with this rule, would incur the following costs. Some turbojets would need a two- or three-camera system while regional jets, including turbojets and turboprops, would need a one-camera system. AirWorks, AEI/AD Aerospace, Bournemouth Aviation Ltd., Goodrich, and Hollingsead International are the only vendors currently supplying these systems for airplanes. Many of their systems have Supplemental Type Certificates (STCs) issued by the FAA. These vendors are selling their systems to several European and Asian airlines as a result of United Kingdom (UK) Department for Transport Directive 21(a), issued on January 27, 2003, which strictly follows the ICAO requirements including the November 1, 2003 deadline. Thus, the FAA bases its estimated average costs on the vendors' reported costs.''

Issued in Washington, DC on October 25, 2005.

Anthony F. Fazio,

Director, Office of Rulemaking.

[FR Doc. 05–21747 Filed 10–31–05; 8:45 am]

BILLING CODE 4910–13–P

DEPARTMENT OF ENERGY

Federal Energy Regulatory Commission

18 CFR Parts 41, 158, 286 and 349

[Docket No. RM06–2–000]

Procedures for Disposition of Contested Audit Matters

October 20, 2005.

AGENCY: Federal Energy Regulatory Commission.

ACTION: Notice of Proposed Rulemaking.

SUMMARY: Pursuant to section 309 of the Federal Power Act, 16 U.S.C. 825h (2000); section 16 of the Natural Gas Act, 15 U.S.C. 717o (2000); sections 20 and 204(a)(6) of the Interstate Commerce Act, 49 App. U.S.C. 20 and 204(a)(6)(2000); and section 501 of the Natural Gas Policy Act of 1978, 15 U.S.C. 3411 (2000), the Federal Energy Regulatory Commission proposes to issue Rules permitting audited persons to challenge audit findings before the issuance of a Commission order on the merits of those findings. The Commission seeks public comment on the Rules proposed herein.

DATES: Comments are due November 22, 2005. Reply comments are due November 29, 2005.

ADDRESSES: Comments may be filed electronically via the eFiling link on the Commission's Web site at *http://www.ferc.gov*. Commenters unable to file comments electronically must send an original and 14 copies of their comments to: Federal Energy Regulatory Commission, Office of the Secretary, 888 First Street NE., Washington, DC 20426. Refer to the Comment Procedures section of the preamble for additional information on how to file comments.

FOR FURTHER INFORMATION CONTACT: John R. Kroeger, Office of Market Oversight and Investigations, Federal Energy Regulatory Commission, 888 First Street, NE., Washington, DC 20426. (202) 502–8177.

SUPPLEMENTARY INFORMATION:

I. Summary

1. In this Notice of Proposed Rulemaking (NOPR), the Federal Energy Regulatory Commission (Commission) proposes to amend parts 41 and 158, add new language to part 286 and to add a new part 349 to its regulations.[1] The main purpose of the proposed rule is to apply existing procedures for challenging the Commission staff's financial audit findings and proposed remedies to the Commission staff's operational audit findings and proposed remedies as well.

2. The Commission is proposing to amend its regulations to permit any audited person [2] to challenge staff audit findings and proposed remedies (collectively, audit matters) before the issuance of a Commission order on the merits of those audit matters. Under the proposed rule, the Commission would issue an order on the merits with respect to non-disputed audit matters contained in a notice of deficiency, audit report or similar document and would notice, without making any findings on the merits, any disputed audit matters. The Commission would provide the audited person an opportunity to challenge any such disputed audit matters. The audited person could then elect a shortened procedure [3] or a trial-type hearing to challenge the disputed audit matters. The Commission would honor this election unless in the Commission's judgment there were no material facts in dispute which require cross-examination.

II. Background

3. Relevant portions of the existing language of parts 41 and 158 that relate to procedures for challenging audit matters date at least to 1937.[4] At that time and for many years afterward, Commission staff audited primarily the financial accounts and records of jurisdictional persons and the language of these sections was adequate. Financial audits have been conducted mainly to determine compliance with parts 101 (Uniform System of Accounts Prescribed for Public Utilities and Licensees), 201 (Uniform System of Accounts Prescribed for Natural Gas Companies) and 352 (Uniform Systems of Accounts Prescribed for Oil Pipeline Companies). However, in more recent years the Commission staff has conducted operational audits. Operational audits have been conducted to determine compliance with the Commission's Standards of Conduct,[5] Behavior Rules,[6] Codes of Conduct, tariff matters and other Commission requirements. Thus, operational audits address matters that are not explicitly covered by the existing provisions of parts 41 and 158. Accordingly, the proposed rule is needed to provide the audited persons who are subject to operational audits, and indeed, to all audits the Commission staff conducts, the same procedural benefits provided to audited persons who are subject to financial audits. The proposed rule would advance the due process rights of all audited persons by providing an effective procedure for them to challenge staff audit findings.

4. The Commission's regulations do not now contain procedures for challenging audit findings and proposed remedies of audits conducted under the NGPA and the ICA. The proposed rule includes audits under these statutes for the sake of completeness. While the Commission's staff conducts audits under the authority of these statutes less frequently than it does under the NGA and FPA, the proposed rule would permit persons audited under the NGPA and the ICA to challenge audit matters in the same way that persons audited under the NGA or FPA could challenge audit matters.

III. Discussion

5. The Commission staff conducts audits of persons subject to the Commission's jurisdiction to determine compliance with the Uniform Systems of Accounts and other requirements of the Commission. The Commission's audit staff conducts audits that pertain to orders, rules and regulations covering, among other things, financial accounting and reporting, annual charges, Standards of Conduct and Codes of Conduct, interlocking directorates, and other requirements affecting persons under the Commission's jurisdiction.

6. The Commission's rules now permit persons subject to financial audits to challenge staff audit findings before the issuance of a Commission order on the merits of those findings. Parts 41 and 158, at sections 41.1 through 41.7 and at sections 158.1 through 158.7, respectively, currently provide for Commission or Commission staff to inform a person subject to the Commission's FPA jurisdiction (in the case of part 41) or the Commission's NGA jurisdiction (in the case of part 158) of a deficiency with respect to the following limited classification of items: (1) The maintenance of accounts, or any books and records pertaining to or in support of those accounts; or (2) any statement or report submitted by such person. In the event of a disagreement between such person and the Commission or its staff with respect to any finding, parts 41 and 158 permit such person to challenge one or more findings of audit staff before issuance of an order by the Commission on the merits of the audit findings. An audited person can challenge the findings by either choosing a paper hearing, referred to as a ''shortened procedure'' in parts 41 and 158, or a trial type-hearing under subpart E of part 385 of the Commission's regulations.[7] The shortened procedure consists of an opportunity to submit briefs to the Commission with respect to the disagreement. If the audited person does not choose the shortened procedure, the Commission will assign the proceeding for a trial-type hearing except when there are no material facts in dispute requiring cross-examination.

7. The proposed rule would expand the existing procedural rights of persons subject to audits conducted by the Commission staff. Accordingly, under the proposed rule, the Commission would not limit the ability to challenge staff audit findings before the issuance of a Commission order on the merits of those findings to persons subject to financial audits only, *i.e.*, audits of accounts or books and records in support of those accounts, or audits of statements or reports submitted to the Commission. Instead, the Commission would amend its regulations to permit all audited persons who disagree with staff audit findings to so challenge them.

8. The Commission's audit staff communicates its audit findings and

[1] 18 CFR parts 41, 158 and 286 (2005). Part 41 applies to public utilities and licensees under the Federal Power Act (FPA), part 158 applies to natural gas companies under the Natural Gas Act (NGA), part 286 applies to entities subject to the Commission's jurisdiction under the Natural Gas Policy Act of 1978 (NGPA) and the new part 349 would apply to common carries subject to the Commission's jurisdiction under the Interstate Commerce Act (ICA).

[2] The term ''person'' as used in this notice and the accompanying regulatory text is the same as the definition of person found in parts 101 (Definition 24) and 201 (Definition 27) of the Commission's regulations, which reads as follows: ''An individual, a corporation, a partnership, an association, a joint stock company, a business trust, or any other organized group of persons, whether incorporated or not, or any receiver or trust.''

[3] The term ''shortened procedure'' as used in this notice and the accompanying regulatory text refers to a ''paper hearing,'' or briefing of matters only, not including a trial-type proceeding, in a contested proceeding before the Commission.

[4] *See* Federal Power Commission, *Rules of Practice and Regulations* § 301(a) (Revised January 1, 1937).

[5] *See* 18 CFR part 358 (2005).

[6] *See Authorization of Terms and Conditions of Public Utility Market-Based Rate Authorizations*, 105 FERC ¶ 61,218 (2003); *Amendments to Blanket Sales Certificates, III FERC Statutes & Regulations, Regulations Preambles* ¶ 31,153 (2003).

[7] *See* 18 CFR 41.1 and 158.1 (2005).

proposed remedies with the audited person. The audited person has an opportunity to provide written comments signifying agreement or disagreement with the audit findings and proposed remedial measures. Under the proposed rule, in cases where the audited person communicated its disagreement with any finding or proposed remedy, the Commission would notice any such disputed findings and proposed remedies, without ruling on the merits with respect to them, in any initial order regarding the notice of deficiency, audit report or similar document. For all audits, the Commission would provide the audited person the opportunity to timely challenge the noticed finding or findings and proposed remedial measures through the shortened procedure or a trial-type hearing. The Commission would honor the audited person's election unless in the Commission's judgment there were no material facts in dispute which require cross-examination. By opting for the shortened procedure, the person has waived any right to subsequently request a hearing before an administrative law judge under section 41.7 or 158.7.[8]

9. The Commission is also proposing to permit persons audited under the NGPA or the ICA the same opportunity to challenge staff audit findings before the Commission issues an order on the merits of those findings.[9] The Commission's regulations applicable to these statutes do not contain provisions analogous to the procedures in parts 41 and 158. Accordingly, the proposed rule would add sections 286.103 through 286.109 to part 286 to provide the indicated provisions for persons audited under authority of the NGPA. The proposed rule would further add a new part 349 to provide the indicated provisions for persons audited under authority of the ICA.

10. The Commission has legal authority to make the proposed changes under the FPA, NGA, ICA and NGPA.[10] In this respect, the FPA and NGA empower the Commission, with respect to public utilities and interstate natural gas pipeline companies to ''perform any and all acts, and to prescribe, issue, make, amend, and rescind such orders, rules and regulations as it may find necessary or appropriate to carry out the provisions of [the] Act.''[11]

11. The Commission invites public comments on whether the Commission should also provide informal procedures before proceeding with the formal procedures contained in the proposed rule. Commenters should address the relative merits of such processes and how they could function in concert with the proposed rule.

IV. Information Collection Statement

12. This proposed rule clarifies and amends the existing requirements to apply to all audits and does not include new information collections under the provisions of the Paperwork Reduction Act of 1995.[12]

V. Environmental Analysis

13. The Commission is required to prepare an Environmental Assessment or an Environmental Impact Statement for any action that may have a significant adverse effect on the human environment. The Commission has categorically excluded certain actions from this requirement as not have a significant effect on the human environment. Included in the exclusions are rules that are clarifying, corrective, or procedural or that do not substantively change the effect of the regulations being amended. This proposed rule, if finalized, is procedural in natural and therefore falls under this exception; consequently, no environmental consideration would be necessary.

VI. Regulatory Flexibility Act Statement

14. The Regulatory Flexibility Act of 1980 (RFA)[13] generally requires a description and analysis of final rules that will have significant economic impact on a substantial number of small entities. The Commission is not required to make such analyses if a rule would not have such an effect. The Commission concludes that this rule would not have such an impact on small entities. Most filing companies regulated by the Commission do not fall within the Commission's definition of a small entity. The proposed rule would not impose new filing requirements.

VII. Comment Procedures

15. The Commission invites interested persons to submit written comments on the matters and issues proposed in this notice to be adopted, including any related matters or alternative proposals that commenters may wish to discuss. Comments are due 21 days from publication in the **Federal Register**. Comments must refer to Docket No. RM06–2–000, and may be filed either in electronic or paper format. Those filing electronically do not need to make a paper filing.

16. Documents filed electronically via the Internet can be prepared in a variety of formats, including WordPerfect, MS Word, Portable Document Format, Real Text Format, or ASCII format, as listed on the Commission's Web site at *http://ferc.gov* under the e-Filing link. The e-Filing link provides instructions for how to Login and complete an electronic filing. First time users will have to establish a user name and password. The Commission will send an automatic acknowledgment to the sender's e-mail address upon receipt of comments. User assistance for electronic filing is available at 202–208–0258 or by e-mail to *efiling@ferc.gov*. Comments should not be submitted to the e-mail address.

17. For paper filings, the original and 14 copies of such comments should be submitted to the Office of the Secretary, Federal Energy Regulatory Commission, 888 First Street, NE., Washington, DC 20426.

18. All comments will be placed in the Commission's public files and will be available for inspection in the Commission's Public Reference Room at 888 First Street, NE., Washington, DC 20426, during regular business hours. Additionally, all comments may be viewed, printed, or downloaded remotely via the Internet through FERC's home page.

VIII. Document Availability

19. In addition to publishing the full text of this document in the **Federal Register**, the Commission provides all interested persons an opportunity to view and/or print the contents of this document via the Internet through FERC's home page and in FERC's Public Reference Room during normal business hours.

20. From FERC's home page on the Internet, this information is available in e-library. The full text of this document is available in e-library in PDF and MS Word format for viewing, printing or downloading. To access this document in e-library, type the docket number excluding the last three digits of this document in the docket number field.

[8] *See* sections 41.3 and 158.3 of the Commission's regulations; 18 CFR 41.3 and 158.7 (2005).

[9] The Commission staff may conduct an audit pursuant to its enforcement authority found in section 501(a) of the NGPA, 15 U.S.C. 3411(a) (2000). Such audits are infrequent and the Commission suggests no change in the frequency of such audits by the promulgation of this proposed rule. The Commission staff may conduct an audit to assure compliance with the Uniform Systems of Accounts Prescribed for Oil Pipeline Companies, 18 CFR part 352 (2005).

[10] *See* section 309 of the FPA, 16 U.S.C. 825h (2000); section 16 of the NGA, 15 U.S.C. 717o (2000); sections 20 and 204(a)(6) of the ICA; 49 App. U.S.C. 20 and 204(a)(6) (2000); and section 501 of the NGPA, 15 U.S.C. 3411 (2000).

[11] Section 309 of the FPA, 16 U.S.C. 825h (2000); and section 16 of the NGA, 15 U.S.C. 717o (2000).

[12] 44 U.S.C. 3501 *et seq.* (2000).

[13] 5 U.S.C. 601–612.

21. User assistance is available for e-library and the FERC's Web site during normal business hours from our Help line at (202) 208–2222 or the Public Reference Room at (202) 208–1371. E-mail the Public Reference Room at *public.reference@ferc.gov*.

List of Subjects

18 CFR Part 41

Electric power, accounts, records, memoranda, conduct, shortened procedure.

18 CFR Part 158

Natural gas, accounts, records, memoranda, conduct, shortened procedure.

18 CFR Part 286

Natural gas, accounts, records, memoranda, conduct, shortened procedure.

18 CFR Part 349.

Oil pipelines, accounts, records, memoranda, conduct, shortened procedure.

By direction of the Commission.

Magalie R. Salas,

Secretary.

In consideration of the foregoing, the Commission proposes to amend Chapter 1, Title 18, of the *Code of Federal Regulations,* as follows:

PART 41—ACCOUNTS, RECORDS, MEMORANDA AND DISPOSITION OF CONTESTED AUDIT FINDINGS AND PROPOSED REMEDIES

1. The authority citation for part 41 continues to read as follows:

Authority: 16 U.S.C. 791a–825r.

2. The heading of part 41 is revised to read as set forth above.

3. Sections 41.1, 41.2 and 41.3, and the undesignated center heading preceding them, are revised to read as follows:

Disposition of Contested Audit Findings and Proposed Remedies

§ 41.1 Notice to audited person.

An audit conducted by the Commission's staff under authority of the Federal Power Act may result in a notice of deficiency or audit report or similar document containing a finding or findings that the audited person has not complied with a requirement of the Commission with respect to, but not limited to, the following: A filed tariff or tariffs, contracts, data, records, accounts, books, communications or papers relevant to the audit of the audited person; matters under the Standards of Conduct or the Code of Conduct; and the activities or operations of the audited person. The notice of deficiency, audit report or similar document may also contain one or more proposed remedies that address findings of noncompliance. Where such findings, with or without proposed remedies, appear in a notice of deficiency, audit report or similar document, such document shall be provided to the audited person, and the finding or findings, and any proposed remedies, shall be noted and explained. The audited person shall timely indicate in a written response any and all findings, including any and all proposed remedies, with which the audited person disagrees. Any initial order that the Commission subsequently may issue with respect to the notice of deficiency, audit report or similar document shall note, but not address on the merits, the finding or findings and any proposed remedies with which the audited person disagreed. The Commission shall provide the audited person a specified number of days to respond with respect to the finding or findings and any proposed remedies with which it disagreed.

§ 41.2 Response to notification.

Upon issuance of a Commission order that notes a finding or findings, with or without proposed remedies, with which the audited person has disagreed, the audited person may: Acquiesce in the findings and proposed remedies by not timely responding to the Commission order, in which case the Commission may issue an order approving them or taking other action; or challenge the finding or findings, and any proposed remedies, with which it disagreed by timely notifying the Commission in writing that it requests Commission review by means of a shortened procedure or, if there are material facts in dispute which require cross-examination, a trial-type hearing.

§ 41.3 Shortened procedure.

If the audited person subject to a Commission order described in § 41.1 notifies the Commission that it seeks to challenge one or more audit findings, with or without proposed remedies, by the shortened procedure, the Commission shall thereupon issue a notice setting a schedule for the filing of memoranda. The person electing the use of the shortened procedure, and any other interested entities, including the Commission staff, shall file, by the date specified by the Commission in the notice, an initial memorandum that addresses the relevant facts and applicable law that support the position or positions taken regarding the matters at issue. In the notice, the Commission shall also set a date for the filing of reply memoranda, which may be filed only by participants that filed initial memoranda. Subpart T of part 385 of the Commission's regulations shall apply to all filings. A person that consents to the matter being handled pursuant to the shortened procedure has waived any right to subsequently request a hearing pursuant to § 41.7 and may not later request such a hearing.

* * * * *

PART 158—ACCOUNTS, RECORDS MEMORANDA AND DISPOSITION OF CONTESTED AUDIT FINDINGS AND PROPOSED REMEDIES

4. The authority citation for part 158 continues to read as follows:

Authority: 15 U.S.C. 717–717w.

5. The heading of part 158 is revised to read as set forth above.

6. Sections 158.1, 158.2 and 158.3, and the undesignated center heading preceding them, are revised to read as follows:

Disposition of Contested Audit Findings and Proposed Remedies

§ 158.1 Notice to audited person.

An audit conducted by the Commission or its staff under authority of the Natural Gas Act may result in a notice of deficiency or audit report or similar document containing a finding or findings that the audited person has not complied with a requirement of the Commission with respect to, but not limited to, the following: A filed tariff or tariffs, contracts, data, records, accounts, books, communications or papers relevant to the audit of the audited person; matters under the Standards of Conduct or the Code of Conduct; and the activities or operations of the audited person. The notice of deficiency, audit report or similar document may also contain one or more proposed remedies that address findings of noncompliance. Where such findings, with or without proposed remedies, appear in a notice of deficiency, audit report or similar document, such document shall be provided to the audited person, and the finding or findings, and any proposed remedies, shall be noted and explained. The audited person shall timely indicate in a written response any and all findings, including any and all proposed remedies, with which the audited person disagrees. Any initial order that the Commission subsequently may issue with respect to the notice of deficiency, audit report or similar document shall note, but not address on the merits, the

finding or findings and any proposed remedies with which the audited person disagreed. The Commission shall provide the audited person a specified number of days to respond with respect to the finding or findings and any proposed remedies with which it disagreed.

§ 158.2 Response to notification.

Upon issuance of a Commission order that notes a finding or findings, with or without proposed remedies, with which the audited person has disagreed, the audited person may: Acquiesce in the findings and proposed remedies by not timely responding to the Commission order, in which case the Commission may issue an order approving them or taking other action; or challenge the finding or findings and any proposed remedies with which it disagreed by timely notifying the Commission in writing that it requests Commission review by means of a shortened procedure, or, if there are material facts in dispute which require cross-examination, a trial-type hearing.

§ 158.3 Shortened procedure.

If the audited person subject to a Commission order described in § 158.1 notifies the Commission that it seeks to challenge one or more audit findings, with or without proposed remedies, by the shortened procedure, the Commission shall thereupon issue a notice setting a schedule for the filing of memoranda. The person electing the use of the shortened procedure, and any other interested entities, including the Commission staff, shall file, by the date specified by the Commission in the notice, an initial memorandum that addresses the relevant facts and applicable law that support the position or positions taken regarding the matters at issue. In the notice, the Commission shall also set a date for the filing of reply memoranda, which may be filed only by participants that filed initial memoranda. Subpart T of part 385 of the Commission's regulations shall apply to all filings. A person that consents to the matter being handled pursuant to the shortened procedure has waived any right to subsequently request a hearing pursuant to § 158.7 and may not later request such a hearing.

* * * * *

PART 286—ADMINISTRATIVE PROCEDURES AND DISPOSITION OF CONTESTED AUDIT FINDINGS AND PROPOSED REMEDIES

7. The authority citation for part 286 continues to read as follows:

Authority: Administrative Procedure Act, 5 U.S.C. 551 *et seq.*, Natural Gas Policy Act of 1978, Pub. L. 95–621, 92 Stat. 3350, Department of Energy Organization Act, Pub. L. 95–91, E.O. 12009, 42 FR 46267.

8. The heading of part 286 is revised to read as set forth above.

9. Sections 286.103 through 286.109 and a new undesignated center heading preceding them are added as follows:

Disposition of Contested Audit Findings and Proposed Remedies

§ 286.103 Notice to audited person.

An audit conducted by the Commission or its staff under authority of the Natural Gas Policy Act may result in a notice of deficiency or audit report or similar document containing a finding or findings that the audited person has not complied with a requirement of the Commission with respect to, but not limited to, the following: A filed tariff or tariffs, contracts, data, records, accounts, books, communications or papers relevant to the audit of the audited person; matters under the Standards of Conduct or the Code of Conduct; and the activities or operations of the audited person. The notice of deficiency, audit report or similar document may also contain one or more proposed remedies that address findings of noncompliance. Where such findings, with or without proposed remedies, appear in a notice of deficiency, audit report or similar document, such document shall be provided to the audited person, and the finding or findings, and any proposed remedies, shall be noted and explained. The audited person shall timely indicate in a written response any and all findings, including any and all proposed remedies, with which the audited person disagrees. Any initial order that the Commission subsequently may issue with respect to the notice of deficiency, audit report or similar document shall note, but not address on the merits, the finding or findings and any proposed remedies with which the audited person disagreed. The Commission shall provide the audited person a specified number of days to respond with respect to the finding or findings and any proposed remedies with which it disagreed.

§ 286.104 Response to notification.

Upon issuance of a Commission order that notes a finding or findings, with or without proposed remedies, with which the audited person has disagreed, the audited person may: Acquiesce in the findings and proposed remedies by not timely responding to the Commission order, in which case the Commission may issue an order approving them or taking other action; or challenge the finding or findings and any proposed remedies with which it disagreed by timely notifying the Commission in writing that it requests Commission review by means of a shortened procedure, or, if there are material facts in dispute which require cross-examination, a trial-type hearing.

§ 286.105 Shortened procedure.

If the audited person subject to a Commission order described in § 286.103 notifies the Commission that it seeks to challenge one or more audit findings, with or without proposed remedies, by the shortened procedure, the Commission shall thereupon issue a notice setting a schedule for the filing of memoranda. The person electing the use of the shortened procedure, and any other interested entities, including the Commission staff, shall file, by the date specified by the Commission in the notice, an initial memorandum that addresses the relevant facts and applicable law that support the position or positions taken regarding the matters at issue. In the notice, the Commission shall also set a date for the filing of reply memoranda, which may be filed only by participants that filed initial memoranda. Subpart T of part 385 of the Commission's regulations shall apply to all filings. A person that consents to the matter being handled pursuant to the shortened procedure has waived any right to subsequently request a hearing pursuant to § 286.109 and may not later request such a hearing.

§ 286.106 Form and style.

Each copy of such memorandum must be complete in itself. All pertinent data should be set forth fully, and each memorandum should set out the facts and argument as prescribed for briefs in § 385.706 of this chapter.

§ 286.107 Verification.

The facts stated in the memorandum must be sworn to by persons having knowledge thereof, which latter fact must affirmatively appear in the affidavit. Except under unusual circumstances, such persons should be those who would appear as witnesses if hearing were had to testify as to the facts stated in the memorandum.

§ 286.108 Determination.

If no formal hearing is had the matter in issue will be determined by the Commission on the basis of the facts and arguments submitted.

§ 286.109 Assignment for oral hearing.

Except when there are no material facts in dispute, when a person does not

consent to the shortened procedure, the Commission will assign the proceeding for hearing as provided by subpart E of part 385 of this chapter. Notwithstanding a person's not giving consent to the shortened procedure, and instead seeking assignment for hearing as provided for by subpart E of part 385 of this chapter, the Commission will not assign the proceeding for a hearing when no material facts are in dispute. The Commission may also, in its discretion, at any stage in the proceeding, set the proceeding for hearing.

10. Part 349 is added to Subchapter P to read as follows:

PART 349—DISPOSITION OF CONTESTED AUDIT FINDINGS AND PROPOSED REMEDIES

Sec.
349.1 Notice to audited person.
349.2 Response to notification.
349.3 Shortened procedure.
349.4 Form and style.
349.5 Verification.
349.6 Determination.
349.7 Assignment for oral hearing.

Authority: 42 U.S.C. 7101–7352; 49 U.S.C. 60502; 49 App. U.S.C. 1–85.

§ 349.1 Notice to audited person.

An audit conducted by the Commission or its staff under authority of the Interstate Commerce Act may result in a notice of deficiency or audit report or similar document containing a finding or findings that the audited person has not complied with a requirement of the Commission with respect to, but not limited to, the following: A filed tariff or tariffs, contracts, data, records, accounts, books, communications or papers relevant to the audit of the audited person; matters under the Standards of Conduct or the Code of Conduct; and the activities or operations of the audited person. The notice of deficiency, audit report or similar document may also contain one or more proposed remedies that address findings of noncompliance. Where such findings, with or without proposed remedies, appear in a notice of deficiency, audit report or similar document, such document shall be provided to the audited person, and the finding or findings, and any proposed remedies, shall be noted and explained. The audited person shall timely indicate in a written response any and all findings, including any and all proposed remedies, with which the audited person disagrees. Any initial order that the Commission subsequently may issue with respect to the notice of deficiency, audit report or similar document shall note, but not address on the merits, the finding or findings and any proposed remedies with which the audited person disagreed. The Commission shall provide the audited person a specified number of days to respond with respect to the finding or findings and any proposed remedies with which it disagreed.

§ 349.2 Response to notification.

Upon issuance of a Commission order that notes a finding or findings, with or without proposed remedies, with which the audited person has disagreed, the audited person may: Acquiesce in the findings and proposed remedies by not timely responding to the Commission order, in which case the Commission may issue an order approving them or taking other action; or challenge the finding or findings and any proposed remedies with which it disagreed by timely notifying the Commission in writing that it requests Commission review by means of a shortened procedure, or, if there are material facts in dispute which require cross-examination, a trial-type hearing.

§ 349.3 Shortened procedure.

If the audited person subject to a Commission order described in § 349.1 above notifies the Commission that it seeks to challenge one or more audit findings, with or without proposed remedies, by the shortened procedure, the Commission shall thereupon issue a notice setting a schedule for the filing of memoranda. The person electing the use of the shortened procedure, and any other interested entities, including the Commission staff, shall file, by the date specified by the Commission in the notice, an initial memorandum that addresses the relevant facts and applicable law that support the position or positions taken regarding the matters at issue. In the notice, the Commission shall also set a date for the filing of reply memoranda, which may be filed only by participants that filed initial memoranda. Subpart T of Part 385 of the Commission's regulations shall apply to all filings. A person that consents to the matter being handled pursuant to the shortened procedure has waived any right to subsequently request a hearing pursuant to § 349.7 and may not later request such a hearing.

§ 349.4 Form and style.

Each copy of such memorandum must be complete in itself. All pertinent data should be set forth fully, and each memorandum should set out the facts and argument as prescribed for briefs in § 385.706 of this chapter.

§ 349.5 Verification.

The facts stated in the memorandum must be sworn to by persons having knowledge thereof, which latter fact must affirmatively appear in the affidavit. Except under unusual circumstances, such persons should be those who would appear as witnesses if hearing were had to testify as to the facts stated in the memorandum.

§ 349.6 Determination.

If no formal hearing is had the matter in issue will be determined by the Commission on the basis of the facts and arguments submitted.

§ 349.7 Assignment for oral hearing.

Except when there are no material facts in dispute, when a person does not consent to the shortened procedure, the Commission will assign the proceeding for hearing as provided by subpart E of part 385 of this chapter. Notwithstanding a person's not giving consent to the shortened procedure, and instead seeking assignment for hearing as provided for by subpart E of part 385 of this chapter, the Commission will not assign the proceeding for a hearing when no material facts are in dispute. The Commission may also, in its discretion, at any stage in the proceeding, set the proceeding for hearing.

[FR Doc. 05–21422 Filed 10–31–05; 8:45 am]
BILLING CODE 6717–01–P

SOCIAL SECURITY ADMINISTRATION

20 CFR Part 411

Additional Town Hall Meetings on the Notice of Proposed Rulemaking for the Ticket to Work and Self-Sufficiency Program

AGENCY: Social Security Administration (SSA).

ACTION: Notice of public town hall meetings.

SUMMARY: We will be holding a series of town hall meetings to maximize the opportunities for individuals and organizations to give us input on our Notice of Proposed Rulemaking (NPRM) to amend our regulations for the Ticket to Work and Self-Sufficiency Program (Ticket to Work program). We invite the public, including beneficiaries and other individuals with disabilities, their advocates, service providers, employers and other interested parties to attend these public meetings and to give us input on our proposed changes to the rules for the Ticket to Work program.

We are announcing the scheduling of three additional town hall meetings.

DATES: We will hold three additional public town hall meetings on November 16, 2005 in Miami, Florida, December 6, 2005 in Hartford, Connecticut and December 14, 2005 in Des Moines, Iowa at 9 a.m. and ending at 12 p.m.

ADDRESSES: The locations of the town hall meetings are:

November 16, 2005. Sheraton Miami Mart Hotel, 711 NW 72nd Avenue, Miami, Florida 33126, Telephone: (305) 261–3800, Fax: (305) 261–7665, Web Site: *http://www.starwoodhotels.com/sheraton/search/hotel_detail.html?propertyID=1532.*

December 6, 2005. Hilton Garden Inn, Hartford North/Bradley International Airport, 555 Corporate Drive, Windsor, Connecticut 06095, Telephone: (860) 688–6400, Fax: (860) 688–5700, Web Site: *http://www.windsor.gardeninn.com.*

December 14, 2005. Des Moines Marriott Downtown, 700 Grand Avenue, Des Moines, Iowa 50309, Telephone: 1–515–245–5500, Fax: 1–515–245–5567, Toll Free Telephone: 1–800–514–4681, Web Site: *http://marriott.com/property/propertypage/DSMIA.*

FOR FURTHER INFORMATION CONTACT: For information about these town hall meetings contact, Paul Kryglik by telephone (410) 965–3735 or TTY (410) 966–5609, or by e-mail to *paul.kryglik@ssa.gov.* You may also mail inquiries about these meetings to Paul Kryglik, Outreach Coordinator, ODISP, Office of Regulations, Social Security Administration, 107 Altmeyer, 6401 Security Boulevard, Baltimore, MD 21235–6401.

For information on eligibility or filing for benefits, call our national toll-free number 1–800–772–1213 or TTY 1–800–325–0778, or visit our Internet site, Social Security Online, at *http://www.socialsecurity.gov.*

SUPPLEMENTARY INFORMATION:

Background

On September 30, 2005, we published an NPRM in the **Federal Register** (70 FR 57222) to amend our current rules for the Ticket to Work program to improve the overall effectiveness of the program in assisting beneficiaries to maximize their economic self-sufficiency through work opportunities. We provided a 90-day period for interested parties to comment. The 90-day comment period ends December 29, 2005. For information on how to give us written comments on the NPRM or read the comments we receive, see **ADDRESSES** section of the NPRM, or ''How do I provide comments if I do not go to a town hall meeting?'' section later in this notice. You may also give us comments orally or in writing at any of the town hall meetings, as explained in this notice.

You may read the NPRM for the Ticket to Work program online. The NPRM is available on the Internet site for the Government Printing Office at *http://www.gpoaccess.gov/fr/index.html.* The NPRM is also available on the Internet site for SSA (*i.e.*, Social Security Online) at *http://policy.ssa.gov/pnpublic.nsf/LawsRegs.*

What Is the Purpose of the Town Hall Meetings?

As contemplated in the NPRM for the Ticket to Work program, we are conducting a series of town hall meetings open to the public in order to obtain additional input on our proposed changes to the current rules for the program. We are holding these town hall meetings to maximize public awareness of our proposed rules for the Ticket to Work program and to maximize the opportunity for beneficiaries and other individuals with disabilities, their advocates, service providers, employers and other interested parties to provide us input on our proposed changes to the program. We invite you and other interested persons to come to any of the town hall meetings to give us oral and/or written comments on the NPRM for the Ticket to Work program.

What Are the Agenda and Format for the Town Hall Meetings?

The full agenda for the meetings, as soon as available, will be posted on the Internet on the ''Work Site'' of SSA's Office of Employment Support Programs, at *http://www.socialsecurity.gov/work.* In general, the agenda and format for the meetings will be as follows:

There will be a brief introductory opening during which SSA officials and/or other personnel, including a facilitator, will introduce themselves and describe the purpose and format of the meeting, including the ground rules for providing oral and/or written comments at the meeting.

We will ask for public comments on our proposed rules after a presentation of an overview of SSA's Comprehensive Work Opportunity Initiative. This discussion will be followed by a brief overview of the Ticket NPRM followed by an opportunity to offer comment on the following areas: (1) State participation and beneficiary choice; (2) employment network payment systems; (3) ticket eligibility for beneficiaries whose conditions may improve; (4) eligibility for more than one ticket per period of eligibility; (5) the definition of ''using a ticket'' and timely progress; (6) the evidence requirements for employment network payment; and (7) availability of phase 1 milestone payments in conjunction with vocational rehabilitation reimbursement.

The third and final phase of the meeting will start with an overview of SSA's Demonstration Projects and will be followed by an opportunity to comment on any of the Demonstration Projects or SSA Work Incentives.

For each issue and as time allows, we will give each individual the opportunity to provide oral comments within a specified amount of time (*e.g.*, approximately two minutes). Microphones will be stationed at convenient points in the meeting room. We will ask individuals wanting to provide comments to us to form a line behind each microphone and approach the microphone in turn. We will ask that each speaker, before delivering his or her remarks, identify themselves by full name, address, and telephone number. For those individuals representing organizations, we will request that they identify themselves by full name, state the name of the organization and the capacity in which they represent the organization, and give the organization's address and telephone number. Each individual will then state his/her comments regarding the area/issue open for comment. Each individual's remarks will be recorded and later transcribed and entered into the rulemaking record as written comments.

We anticipate allotting a period of time to receive oral comments on each area/issue, with a short break between each such period. At times announced during the meeting, and at the end of each meeting, we will accept written comments from individuals wishing to give us comments in writing.

What Will SSA Do With the Comments It Receives on the NPRM?

The transcript of the oral comments on the NPRM given to us at the town hall meetings and any written comments we receive at the meetings, together with the written comments that we receive in the manner prescribed in the NPRM during the 90-day comment period, will become a part of the rulemaking record for making changes to the regulations for the Ticket to Work program. The 90-day comment period ends on December 29, 2005. We will consider all of these comments in developing the final rules for the Ticket

to Work program. We will summarize the public comments we received on the NPRM and respond to the major comments in the preamble to our final regulations.

We will post the written comments we receive during the 90-day comment period, including the transcript of the oral comments presented at the town hall meetings, on our Internet site at *http://policy.ssa.gov/pnpublic.nsf/LawsRegs.* You may also make arrangements to inspect the comments as explained in the ''How do I provide comments on the NPRM if I do not go to a town hall meeting?'' section of this notice.

How Do I Provide Comments on the NPRM if I Do Not Go to a Town Hall Meeting?

You may give us your written comments by: using our Internet site facility (*i.e.*, Social Security Online) at *http://policy.ssa.gov/pnpublic.nsf/LawsRegs* or the Federal eRulemaking Portal at *http://www.regulations.gov;* e-mail to *regulations@ssa.gov;* telefax to (410) 966–2830; or letter to the Commissioner of Social Security, P.O. Box 17703, Baltimore, MD 21235–7703. You may also deliver them to the Office of Regulations, Social Security Administration, 107 Altmeyer Building, 6401 Security Boulevard, Baltimore, MD 21235–6401, between the hours of 8 a.m. and 4:30 p.m. on regular business days. To be sure your comments are considered, we must receive them by December 29, 2005.

We post the comments on our Internet site at *http://policy.ssa.gov/pnpublic.nsf/LawsRegs.* You may also inspect the comments on regular business days by making arrangements with the following contact person: Greg Zwitch, SSA Regulations Officer, Social Security Administration, 107 Altmeyer Building, 6401 Security Boulevard, Baltimore, MD 21235–6401, e-mail *regulations@ssa.gov,* or telephone (410) 965–1887 or TTY (410) 966–5609.

Authority: Sec. 1148 of the Social Security Act (42 U.S.C. 1320b-19); sec. 101(e), Pub. L. 106–170, 113 Stat. 1860, 1877 (42 U.S.C. 1320b–19 note).

Dated: October 27, 2005.

Martin H. Gerry,

Deputy Commissioner for Disability and Income Security Programs.

[FR Doc. 05–21819 Filed 10–31–05; 8:45 am]

BILLING CODE 4191–02–P

ENVIRONMENTAL PROTECTION AGENCY

40 CFR Part 52

[R04–0AR–2005–TN–0006–200519(b); FRL–7990–4]

Approval and Promulgation of Implementation Plans; Tennessee: Nashville Area Second 10-Year Maintenance Plan for the 1-Hour Ozone National Ambient Air Quality Standard

AGENCY: Environmental Protection Agency (EPA).

ACTION: Proposed rule.

SUMMARY: The EPA is proposing to approve a revision to the Tennessee State Implementation Plan (SIP) submitted in final form on August 10, 2005. The SIP revision provides the second 10-year maintenance plan for the Nashville (Middle Tennessee) 1-hour ozone maintenance area (Nashville Area, which is composed of the following five counties: Davidson, Rutherford, Sumner, Williamson, and Wilson. The Nashville Area is still required to fulfill obligations under the 1-hour ozone national ambient air quality standard (NAAQS), because EPA has deferred the effective date of the designation for the Nashville Area under the newer 8-hour ozone NAAQS due to participation in an Early Action Compact. EPA is proposing to approve this SIP revision because it satisfies the requirement of the Clean Air Act for the second 10-year maintenance plan for the Nashville Area.

In addition, in this rulemaking, EPA is providing information on its transportation conformity adequacy determination for new motor vehicle emission budgets (MVEBs) for the year 2016 that are contained in the second 10-year 1-hour ozone maintenance plan for the Nashville Area. EPA determined that the 2016 MVEBs are adequate in a previous action. EPA is also proposing to approve the 2016 MVEBs in this action.

In the Final Rules section of this **Federal Register**, EPA is approving the State's SIP revision as a direct final rule without prior proposal because the Agency views this as a noncontroversial submittal and anticipates no adverse comments. A detailed rationale for the approval is set forth in the direct final rule. If no significant, material, and adverse comments are received in response to this rule, no further activity is contemplated. If EPA receives adverse comments, the direct final rule will be withdrawn and all public comments received will be addressed in a subsequent final rule based on this proposed rule. EPA will not institute a second comment period on this document. Any parties interested in commenting on this document should do so at this time.

DATES: Written comments must be received on or before December 1, 2005.

ADDRESSES: Comments may be submitted by mail to: Anne Marie Hoffman Regulatory Development Section, Air Planning Branch, Air, Pesticides and Toxics Management Division, U.S. Environmental Protection Agency, Region 4, 61 Forsyth Street, SW., Atlanta, Georgia 30303–8960. Comments may also be submitted electronically, or through hand delivery/courier. Please follow the detailed instructions described in the direct final rule, **ADDRESSES** section which is published in the Rules section of this **Federal Register**.

FOR FURTHER INFORMATION CONTACT: Anne Marie Hoffman, Regulatory Development Section, Air Planning Branch, Air, Pesticides and Toxics Management Division, U.S. Environmental Protection Agency, Region 4, 61 Forsyth Street, SW., Atlanta, Georgia 30303–8960. The telephone number is (404) 562–9074. Ms. Hoffman can also be reached via electronic mail at *hoffman.annemarie@epa@epa.gov*.

SUPPLEMENTARY INFORMATION: For additional information see the direct final rule which is published in the Rules section of this **Federal Register**.

Dated: October 17, 2005.

A. Stanley Meiburg,

Acting Regional Administrator, Region 4.

[FR Doc. 05–21529 Filed 10–31–05; 8:45 am]

BILLING CODE 6560–50–P

ENVIRONMENTAL PROTECTION AGENCY

40 CFR Parts 60 and 63

[OAR–2003–0074; FRL–7991–2]

RIN 2060–AG21

Performance Specification 16 for Predictive Emission Monitoring Systems and Amendments to Testing and Monitoring Provisions

AGENCY: Environmental Protection Agency (EPA).

ACTION: Proposed rule; reopening of comment period.

SUMMARY: This action reopens the public comment period for the action entitled ''Performance Specification 16 for Predictive Emission Monitoring Systems and Amendments to Testing

and Monitoring Provisions'' that was proposed in the **Federal Register** on August 8, 2005 (70 FR 45608). The 60-day comment period in the proposal ended October 8, 2005. The comment period is being reopened for two weeks, from November 2–16, 2005. A public commenter requested that the comment period be reopened to allow them to prepare their response since they are a leading vendor of predictive emission monitoring systems and are significantly impacted by the rule. The intended effect of this action is to allow the affected public sufficient time to review and comment on the proposed action.

DATES: *Comments:* The comment period is reopened for two weeks, from November 2–16, 2005. Comments must be received during this two week period.

ADDRESSES: *Comments.* You may submit comments electronically, by mail, by facsimile, or through hand delivery/courier. To ensure proper receipt by EPA, identify the appropriate docket identification number in the subject line on the first page of your comment. Please ensure that your comments are submitted within the specified comment period. Comments received after the close of the comment period will be marked ''late.'' The EPA is not required to consider these late comments. However, late comments may be considered if time permits.

1. *Electronically.* If you submit an electronic comment as prescribed below, EPA recommends that you include your name, mailing address, and an e-mail address or other contact information in the body of your comment. Also include this contact information on the outside of any disk or CD ROM you submit and in any cover letter accompanying the disk or CD ROM. This ensures that you can be identified as the submitter of the comment and allows EPA to contact you in case EPA cannot read your comment due to technical difficulties or needs further information on the substance of your comment. The EPA's policy is that EPA will not edit your comment, and any identifying or contact information provided in the body of a comment will be included as part of the comment that is placed in the official public docket and made available in EPA's electronic public docket. If EPA cannot read your comment due to technical difficulties and cannot contact you for clarification, EPA may not be able to consider your comment.

i. *EDOCKET.* Your use of EPA's electronic public docket to submit comments to EPA electronically is EPA's preferred method for receiving comments. Go directly to EDOCKET at *http://www.epa.gov/edocket*, and follow the online instructions for submitting comments. To access EPA's electronic public docket from the EPA Internet Home Page, select ''Information Sources,'' ''Dockets,'' and ''EDOCKET.'' Once in the system, select ''search,'' and then key in Docket ID No. OAR–2003–0074. The system is an ''anonymous access'' system, which means EPA will not know your identity, e-mail address, or other contact information unless you provide it in the body of your comment.

ii. *http://www.regulations.gov.* Electronic comments may also be sent through the federal wide eRulemaking Web site at *http://www.regulations.gov*.

iii. *E-mail.* Comments may be sent by electronic mail (e-mail) to *a-and-r-docket@epamail.gov*, Attention: Docket ID No. OAR–2003–0074. In contrast to EPA's electronic public docket, EPA's e-mail system is not an ''anonymous access'' system. If you send an e-mail comment directly to the Docket without going through EPA's electronic public docket, EPA's e-mail system automatically captures your e-mail address. E-mail addresses that are automatically captured by EPA's e-mail system are included as part of the comment that is placed in the official public docket and made available in EPA's electronic public docket.

iv. *Disk or CD ROM.* You may submit comments on a disk or CD ROM that you mail to the mailing address identified in Unit I.C.2. These electronic submissions will be accepted in WordPerfect or ASCII file format. Avoid the use of special characters and any form of encryption.

2. *By Mail.* Send duplicate copies of your comments to: ''Performance Specification 16 for Predictive Emission Monitoring Systems,'' Environmental Protection Agency, Mail Code 6102T, 1200 Pennsylvania Ave., NW., Washington, DC 20460, Attention: Docket ID No. OAR–2003–0074.

3. *By Hand Delivery or Courier.* Deliver your comments to: EPA Docket Centers, EPA West, Room 108, 1301 Constitution Ave., NW., Washington, DC 20460, Attention: Docket ID No. OAR–2003–0074. Such deliveries are only accepted during the Docket's normal hours of operation as identified in Unit I.B.1.

4. *By Facsimile.* Fax your comments to: 202–566–1741, Attention: Docket ID. No. OAR–2003–0074.

Docket. Docket No. OAR–2003–0074, contains information relevant to this rule. You can read and copy it between 8:30 a.m. and 5:30 p.m., Monday through Friday, (except for Federal holidays), at the U.S. Environmental Protection Agency, EPA Docket Center, EPA West, Room 108, 1301 Constitution Ave., Washington, DC 20004; telephone (202) 566–1742. The docket office may charge a reasonable fee for copying.

FOR FURTHER INFORMATION CONTACT: Foston Curtis, Emissions Measurement Center, Mail Code D205–02, Emissions, Monitoring, and Analysis Division, U.S. Environmental Protection Agency, Research Triangle Park, North Carolina 27711; telephone (919) 541–1063; facsimile number (919) 541–0516; electronic mail address *curtis.foston@epa.gov*.

List of Subjects

40 CFR Part 60

Environmental protection, Administrative practice and procedures, Intergovernmental relations, Reporting and recordkeeping requirements.

40 CFR Part 63

Environmental protection, Hazardous substances, Intergovernmental relations, Reporting and recordkeeping requirements.

Dated: October 25, 2005.

William L. Wehrum,

Acting Assistant Administrator, Office of Air and Radiation.

[FR Doc. 05–21755 Filed 10–31–05; 8:45 am]

BILLING CODE 6560–50–P

DEPARTMENT OF COMMERCE

National Oceanic and Atmospheric Administration

50 CFR Part 648

[Docket No. 051017270–5270–01; I.D. 093005B]

RIN 0648–AT85

Magnuson-Stevens Fishery Conservation and Management Act Provisions; Fisheries of the Northeastern United States; Atlantic Surfclam and Ocean Quahog Fishery; Proposed 2006 and 2007 Fishing Quotas for Ocean Quahogs

AGENCY: National Marine Fisheries Service (NMFS), National Oceanic and Atmospheric Administration (NOAA), Commerce.

ACTION: Proposed rule; request for comments.

SUMMARY: NMFS proposes quotas for the ocean quahog fishery for 2006 and 2007. Specifications for the Atlantic surfclam and Maine ocean quahog fishery, which remain unchanged from the multi-year quota specifications, are reprinted here

for clarity. Regulations governing these fisheries require NMFS to publish the proposed specifications for the 2006 and 2007 fishing years and seek public comment on such proposed measures. The intent of this action is to propose allowable harvest levels of ocean quahogs from the Exclusive Economic Zone.

DATES: Comments must be received no later than 5 p.m., eastern standard time, on December 1, 2005.

ADDRESSES: Copies of supporting documents, including the Regulatory Impact Review (RIR) and Initial Regulatory Flexibility Analysis (IRFA) are available from Daniel Furlong, Executive Director, Mid-Atlantic Fishery Management Council, Room 2115, Federal Building, 300 South New Street, Dover, DE 19904–6790. A copy of the RIR/IRFA is accessible via the Internet at *http://www.nero.noaa.gov/nero/regs/com.html*.

Written comments on the proposed specifications may be submitted by any of the following methods:

- Mail: Patricia A. Kurkul, Regional Administrator, Northeast Region, NMFS, One Blackburn Drive, Gloucester, MA 01930–2298. Mark on the outside of the envelope, ''Comments on Ocean Quahog Proposed Specifications.''
- Fax: (978) 281–9135.
- E-mail: 0648AT85@noaa.gov. Include in the subject line of the email the following document identifier: ''Comments on Quahog Proposed Specifications.''
- Federal e-Rulemaking Portal: *http://www.regulations.gov.*

FOR FURTHER INFORMATION CONTACT: Brian R. Hooker, Fishery Policy Analyst, 978–281–9220.

SUPPLEMENTARY INFORMATION: The Fishery Management Plan for the Atlantic Surfclam and Ocean Quahog Fisheries (FMP) requires that NMFS, in consultation with the Mid-Atlantic Fishery Management Council (Council), specify quotas for surfclams and ocean quahogs on a 3-year basis, with an annual review, from a range that represents the optimum yield (OY) for each fishery. It is the policy of the Council that the levels selected allow sustainable fishing to continue at that level for at least 10 years for surfclams and 30 years for ocean quahogs. In addition to this constraint, the Council policy also considers the economic impacts of the quotas. Regulations implementing Amendment 10 to the FMP (63 FR 27481, May 19, 1998) added Maine ocean quahogs (locally known as mahogany quahogs) to the management unit, and provided that a small artisanal fishery for ocean quahogs in the waters north of 43 50' N. lat. has an annual quota with an initial amount of 100,000 Maine bushels (bu) (35,240 hectoliters (hL)) within a range of 17,000 to 100,000 Maine bu (5,991 to 35,240 hL). As specified in Amendment 10, the Maine mahogany ocean quahog quota is allocated separately from the quota specified for the ocean quahog fishery. Regulations implementing Amendment 13 to the FMP (68 FR 69970, December 16, 2003) established the ability to set multi-year quotas. An evaluation, in the form of an annual quota recommendation paper, is conducted by the Council every year to determine if the multi-year quota specifications remains appropriate. The fishing quotas must be in compliance with overfishing definitions for each species. In proposing these quotas, the Council considered the available stock assessments, data reported by harvesters and processors, and other relevant information concerning exploitable biomass and spawning biomass, fishing mortality rates, stock recruitment, projected fishing effort and catches, and areas closed to fishing.

In June 2005, the Council voted to recommend maintaining the 2005 quota of 5.333 million bu (284 million L) for the ocean quahog fishery for 2006 and 2007, which is a change from the existing specifications for these fishing years published in the **Federal Register** on January 12, 2005, (70 FR 2023). The Council recommended no change from the existing specifications for Atlantic surfclam and Maine ocean quahog for the 2006 and 2007 fishing years.

The proposed quotas for the 2006–2007 ocean quahog fishery are shown in the table below. The quotas for the Atlantic surfclam and Maine ocean quahog are re-stated in this table for clarity. The 2005 harvest level for ocean quahogs is proposed to be maintained for 2006–2007. The Atlantic surfclam and ocean quahog quotas are specified in standard bu of 53.24 L per bu, while the Maine mahogany ocean quahog quota is specified in ''Maine'' bu of 35.24 L per bu. Because Maine ocean quahogs are the same species as ocean quahogs, both fisheries are assessed under the same ocean quahog overfishing definition. When the two quota amounts (ocean quahog and Maine ocean quahog) are added, the total allowable harvest is still lower than the level that would result in overfishing for the entire stock.

PROPOSED 2006–2007 OCEAN QUAHOG[1] QUOTAS AND RE-STATEMENT OF ATLANTIC SURFCLAM[1] AND MAINE OCEAN QUAHOG QUOTAS

	2006		2007	
	bu	hL	bu	hL
Ocean Quahogs[2]	5.333	2.840	5.333	2.840
Surfclams[2]	3.400	1.810	3.400	1.810
Maine Ocean Quahogs[3]	100,000	35,240	100,000	35,240

[1]Numerical values are in millions except for Maine ocean quahogs
[2]1 bu = 1.88 cubic ft. = 53.24 liters
[3]1 bu = 1.2445 cubic ft. = 35.24 liters

Ocean Quahogs

The proposed 2006–2007 quotas for ocean quahogs reflect a decrease from the current 2006–2007 specifications. The current regulations specify an increase in the 2005 ocean quahog quota from 5.333 million bu (284 million L) to 5.666 million bu (301.6 million L) in 2006 and 6.000 million bu (319.4 million L) in 2007. However, due to an unexpected surplus of ocean quahog product on the market, the planned increase in ocean quahog quota is no longer warranted. The assessment for ocean quahogs found that the current biomass is high, and the resource surveyed from southern New England to southern Virginia is not overfished and

overfishing is not occurring. When there are market surpluses a quota allocation owner could simply choose not to fish their quota allocation, however this would leave a surplus of individual transferrable quota shares on the market. Many individuals participate in this fishery by leasing their excess quota shares on an annual basis. When harvests are reduced in response to market demand fishery participants that depend on income from leasing their quota incur a financial loss. National Standard 8 of the Magnuson-Stevens Fishery Conservation and Management Act (Magnuson-Stevens Act) requires that management measures should, to the extent practicable, minimize adverse economic impacts on fishing communities. This action would reduce the amount of quota shares on the market ensuring the sustained participation of individuals dependent on the annual lease of ocean quahog quota shares.

Classification

This action is authorized by 50 CFR part 648 and has been determined to be not significant for purposes of Executive Order 12866.

Pursuant to 5 U.S.C. 603, an IRFA has been prepared, which describes the economic impacts that this proposed rule, if adopted, would have on small entities. A description of the reasons why this action is being considered, as well as the objectives of and legal basis for this proposed rule is found in the preamble to this document. There are no Federal rules that duplicate, overlap, or conflict with the proposed rule. This action proposes to reduce the 2006 and 2007 ocean quahog fishing quotas from those currently in place. This action was compared to four different quota alternatives for the 2006 and 2007 fishing years. The other quota alternatives included reducing the ocean quahog quota to the minimum quota allowable under the FMP (4.000 million bu (213 million L)) for 2006 and 2007; a slight decrease from the 2005 quota level to 5.000 million bu (266.18 million L) for 2006 and 2007; no action that would maintain the incremental quota increase for 2006 (5.666 million bu (301.6 million L)) and 2007 (6.000 million bu (319.4 million L)); and the maximum quota allowable under the FMP (6.000 million bu (319.4 million L)) for 2006 and 2007.

Description and Estimate of the Number of Small Entities to Which this Proposed Rule Would Apply

The Small Business Administration (SBA) defines a small commercial fishing entity as a firm with gross receipts not exceeding $3.5 million. In 2004, a total of 29 vessels reported harvesting surfclams and/or ocean quahogs from Federal waters under an Individual Transferable Quota (ITQ) system. Average 2004 gross income for ocean quahog harvesters was $789,748 per vessel. Each vessel in this analysis is treated as a single entity for purposes of size determination and impact assessment. All 29 commercial fishing entities would fall under the SBA size standard for small commercial fishing entities. Additionally, there is a total of 56 ocean quahog quota allocation owners as of August 22, 2005. An allocation owner may choose to fish or lease his or her quota allocation.

Economic Impacts of this Proposed Action

By foregoing the planned increase of ocean quahog quota shares on the market it is hoped that entities that depend on the sale or lease of quota shares will continue to be able to participate in the fishery. Leaving the quota at the 2005 harvest level of 5.333 million bu (284 million L) it is not expected to constrain the fishery. In fact, the total 2005 harvest is not expected to exceed 3.000 million bu (159.72 million L). As of September 15, 2005, only 2.1 million bu (111.80 million L), which is just over 40 percent of the available quota, was harvested with only three months left in the 12-month fishing year. By not increasing the quota, companies that have access to steady product demand may be required to lease or buy quota to fulfill their needs.

Economic Impacts of Alternatives to the Proposed Action

The Council analyzed four ocean quahog quota alternatives in addition to the preferred alternative. The alternatives are as follows: the preferred alternative of maintaining the 2005 quota level; an alternative with a 25–percent (1.333 million bu (71 million L)) decrease; an alternative with the 2004 status quo of 5.000 million bushels (266.18 million L); an alternative with a 6.2–percent (0.333 million bu (17.73 million L)) increase; and an alternative with an increase to the maximum allowable quota (6.000 million bu (319.4 million L)). The minimum allowable quota specified in the current OY range is 4.000 million bu (212.94 million L) of ocean quahogs. Adoption of a 4.000 million bu (212.94 million L) quota would represent a 25–percent decrease from the current quota. This alternative would take the most conservative approach to managing the fishery that is currently available to the Council, but would result in the fewest economic benefits available to the ocean quahog fishery because it would produce the fewest landings. The alternative to reduce the quota to 5.000 million bu (266.18 million L) would reduce the amount of available quota share and thus the overall quota to the 2004 level. This alternative is not preferred because the industry believes that a reduction in quota from 2005 would communicate shortages in supply or harvesting capacity to the market. The other alternatives all propose to increase the quota. These are not preferred as they would create a fishery-wide surplus of quota share that could prevent small fishing entities from leasing or selling their individual surplus quota share to other entities with access to a steady market. The Council concluded that while an increase is not warranted at this time they chose also to keep some flexibility in the quota so the industry would be able to react to an increase in product demand. However, the Council remains concerned that the industry does not currently have a market available to absorb a large increase in landings that quickly. Given this information, the Council and NMFS recommend maintaining the 2005 ocean quahog quota level for 2006 and 2007.

Reporting and Recordkeeping Requirements

This proposed rule would not impose any new reporting, recordkeeping, or other compliance requirements. Therefore, the costs of compliance would remain unchanged.

Authority: 16 U.S.C. 1801 *et seq.*

Dated: October 26, 2005.

John Oliver,

Deputy Assistant Administrator for Operations, National Marine Fisheries Service.

[FR Doc. 05–21772 Filed 10–31–05; 8:45 am]

BILLING CODE 3510–22–S

Notices

Federal Register

Vol. 70, No. 210

Tuesday, November 1, 2005

This section of the FEDERAL REGISTER contains documents other than rules or proposed rules that are applicable to the public. Notices of hearings and investigations, committee meetings, agency decisions and rulings, delegations of authority, filing of petitions and applications and agency statements of organization and functions are examples of documents appearing in this section.

DEPARTMENT OF AGRICULTURE

Commodity Credit Corporation

Notice of Request for Extension of a Currently Approved Information Collection

AGENCY: Commodity Credit Corporation, USDA.

ACTION: Notice and request for comments.

SUMMARY: In accordance with the Paperwork Reduction Act of 1995, this notice announces the Commodity Credit Corporation's (CCC) intention to request an extension for a currently approved information collection in support of the CCC Export Credit Guarantee Program (GSM–102) and the CCC Supplier Credit Guarantee Program (SCGP) based on re-estimates.

DATES: Comments on this notice must be received by January 3, 2006 to be assured of consideration.

ADDITIONAL INFORMATION OR COMMENTS: Contact William Hawkins, Director, Program Administration Division, Foreign Agricultural Service, U.S. Department of Agriculture, AgStop 1031, Washington, DC 20250–1031, telephone (202) 720–3241.

SUPPLEMENTARY INFORMATION:

Title: CCC Export Credit Guarantee Program (GSM–102) and CCC Supplier Credit Guarantee Program (SCGP).

OMB Number: 0551–0004 (GSM–102) and 0551–0037 (SCGP).

Expiration Date of Approval: February 28, 2006.

Type of Request: Extension of a currently approved information collection.

Abstract: The primary objective of the GSM–102 and SCGP programs is to expand U.S. agricultural exports by making available export credit guarantees to encourage U.S. private sector financing of foreign purchases of U.S. agricultural commodities on credit terms. The CCC currently has programs operating in at least 40 countries and country regions, with 169 exporters eligible to participate. Under 7 CFR Part 1493, exporters are required to submit the following: (1) Information about the exporter for program participation, (2) export sales information in connection with applying for a payment guarantee, (3) information regarding the actual export of the commodity, (evidence of export report), (4) notice of default and claims for loss, and (5) other documents, if applicable, including notice of assignment of the right to receive proceeds under the export credit guarantee. In addition, each exporter and exporter's assignee (U.S. financial institution) must maintain records on all information submitted to CCC and in connection with sales made under GSM–102, and SCGP. The information collected is used by CCC to manage, plan, evaluate and account for government resources. The reports and records are required to ensure the proper and judicious use of public funds.

Estimate of Burden: The public reporting burden for these collections is estimated to average 0.49 hours per GSM–102 response and 0.64 hours per SCGP response.

Respondents: Exporters of U.S. agricultural commodities, banks or other financial institutions, producer associations, export trade associations, and U.S. Government agencies.

Estimated Number of Respondents: 298 per annum.

Estimated Number of Responses per Respondent: 74.3 per annum.

Estimated Total Annual Burden of Respondents: 12,480.1 hours.

Copies of this information collection can be obtained from Kimberly Chisley, the Agency Information Collection Coordinator, at (202) 720–2568.

Requests for Comments: Send comments regarding (a) Whether the proposed collection of information is necessary for the proper performance of the functions of the agency, including whether the information will have practical utility; (b) the accuracy of the agency's estimate of the burden of the proposed collection of information; (c) ways to enhance the quality, utility and clarity of the information to be collected; and (d) ways to minimize the burden of the collection of information on those who are to respond, including through the use of automated, electronic, mechanical, or other technological collection techniques or other forms of information technology. Comments may be sent to William Hawkins, Director, Program Administration Division, Foreign Agricultural Service, U.S. Department of Agriculture, AgStop 1031, Washington, DC 20250–1031, or to the Desk Officer for Agriculture, Office of Information and Regulatory Affairs, Office of Management and Budget, Washington, DC 20503. Persons with disabilities who require an alternative means for communication of information (Braille, large print, audiotape, etc.) should contact USDA's Target Center at (202) 720–2600 (voice and TDD).

All responses to this notice will be summarized and included in the request for OMB approval.

All comments will also become a matter of public record.

Dated: October 14, 2005.

A. Ellen Terpstra,

Administrator, Foreign Agricultural Service.

[FR Doc. 05–21675 Filed 10–31–05; 8:45 am]

BILLING CODE 3410–10–M

DEPARTMENT OF AGRICULTURE

Forest Service

Newspapers To Be Used for Publication of Legal Notice of Appealable Decisions for the Southern Region; AL, KY, GA, TN, FL, LA, MS, VA, WV, AR, OK, NC, SC, TX and PR

AGENCY: Forest Service, USDA.

ACTION: Notice and correction.

SUMMARY: Deciding Officers in the Southern Region will publish notice of decisions subject to administrative appeal under 36 CFR part 217 in the legal notice section of the newspapers listed in the **SUPPLEMENTARY INFORMATION** section of this notice. As provided in 36 CFR part 217.5(d), the public shall be advised through **Federal Register** notice, of the newspaper of record to be utilized for publishing legal notice of decisions. Newspaper publication of notice of decisions is in addition to direct notice of decisions to those who have requested it and to those who have participated in project planning. The Responsible Official gave annual notice in the **Federal Register** published on April 8, 2005, of newspapers of record to be utilized for

publishing notice of proposed actions and of decisions subject to appeal under 36 CFR part 215.5 and for publishing notice of opportunities to object to proposed authorized hazardous fuel reduction projects under 36 CFR part 218.4. The list of newspapers to be used for 215 notice and decision and 218 notice of objection opportunities is as listed in the **SUPPLEMENTARY INFORMATION** section of this notice with no changes from the April 8, 2005, publication.

DATES: Use of these newspapers for purposes of publishing legal notice of decisions subject to appeal under 36 CFR part 217 shall begin on or after the date of this publication.

FOR FURTHER INFORMATION CONTACT: Cheryl Herbster, Regional Appeals Coordinator, Southern Region, Planning, 1720 Peachtree Road, NW., Atlanta, Georgia 30309, Phone: 404–347–5245.

SUPPLEMENTARY INFORMATION: Deciding Officers in the Southern Region will give legal notice of decisions subject to appeal under 36 CFR part 217 in the following newspapers which are listed by Forest Service Administrative unit. Where more than one newspaper is listed for any Administrative unit, the first newspaper listed is the newspaper of record that will be utilized for publishing the legal notice of decisions and calculating timeframes. Secondary newspapers listed for a particular unit are those newspapers the Deciding Officer expects to use for purposes of providing additional notice. The timeframe for appeal shall be based on the date of publication of the legal notice of the decision in the newspaper of record. The following newspapers will be used to provide notice.

Southern Region

Regional Forester Decisions

Affecting National Forest System lands in more than one Administrative Unit of the 15 in the Southern Region, *Atlanta Journal-Constitution*, published daily in Atlanta, GA.

Affecting National Forest System lands in only one Administrative unit or only one Ranger District will appear in the newspaper of record elected by the National Forest, National Grassland, National Recreation Area, or Ranger District as listed below.

National Forests in Alabama, Alabama

Forest Supervisor Decision

Montgomery Advertiser, published daily in Montgomery, AL

District Ranger Decisions

Bankhead Ranger District: *Northwest Alabamian,* published bi-weekly (Wednesday & Saturday) in Haleyville, AL
Conecuh Ranger District: *The Andalusia Star News,* published daily (Tuesday through Saturday) in Andalusia, AL
Oakmulgee Ranger District: *The Tuscaloosa News,* published daily in Tuscaloosa, AL
Shoal Creek Ranger District: *The Anniston Star,* published daily in Anniston, AL
Talladega Ranger District: *The Daily Home,* published daily in Talladega, AL
Tuskegee Ranger District: *Tuskegee News,* published weekly (Thursday) in Tuskegee, AL

Caribbean National Forest, Puerto Rico

Forest Supervisor Decisions

El Nuevo Dia, published daily in Spanish in San Juan, PR
San Juan Star, published daily in English in San Juan, PR

Chattahoochee-Oconee National Forest, Georgia

Forest Supervisor Decisions

The Times, published daily in Gainesville, GA

District Ranger Decisions

Armuchee Ranger District: *Walker County Messenger*, published bi-weekly (Wednesday & Friday) in LaFayette, GA
Brasstown Ranger District: *North Georgia News*, (newspaper of record) published weekly (Wednesday) in Blairsville, GA
Towns County Herald, (secondary) published weekly (Thursday) in Hiawassee, GA
The Dahlonega Nuggett, (secondary) published weekly (Wednesday) in Dahlonega, GA
Chattooga Ranger District: *Northeast Georgian*, (newspaper of record) published bi-weekly (Tuesday & Friday) in Cornelia, GA
Chieftain & Toccoa Record, (secondary) published bi-weekly (Tuesday & Friday) in Toccoa, GA
White County News Telegraph, (secondary) published weekly (Thursday) in Cleveland, GA
The Dahlonega Nuggett, (secondary) published weekly (Thursday) in Dahlonega, GA
Cohutta Ranger District: *Chatsworth Times*, published weekly (Wednesday) in Chatsworth, GA
Oconee Ranger District: *Eatonton Messenger*, published weekly (Thursday) in Eatonton, GA
Tallulah Ranger District: *Clayton Tribune*, published weekly (Thursday) in Clayton, GA
Toccoa Ranger District: *The News Observer* (newspaper of record) published bi-weekly (Tuesday & Friday) in Blue Ridge, GA
The Dahlonega Nuggett, (secondary) published weekly (Wednesday) in Dahlonega, GA

Cherokee National Forest, Tennessee

Forest Supervisor Decisions

Knoxville News Sentinel, published daily in Knoxville, TN

District Ranger Decisions

Nolichucky-Unaka Ranger District: *Greeneville Sun*, published daily (except Sunday) in Greeneville, TN
Ocoee-Hiwassee Ranger District: *Polk County News*, published weekly (Wednesday) in Benton, TN
Tellico Ranger District: *Monroe County Advocate*, published tri-weekly (Wednesday, Friday, and Sunday) in Sweetwater, TN
Watauga Ranger District: *Johnson City Press*, published daily in Johnson City, TN

Daniel Boone National Forest, Kentucky

Forest Supervisor Decisions

Lexington Herald-Leader, published daily in Lexington, KY

District Ranger Decisions

London Ranger District: *The Sentinel-Echo*, published tri-weekly (Monday, Wednesday, and Friday) in London, KY
Morehead Ranger District: *Morehead News*, published bi-weekly (Tuesday and Friday) in Morehead, KY
Redbird Ranger District: *Manchester Enterprise*, published weekly (Thursday) in Manchester, KY
Somerset Ranger District: *Commonwealth-Journal*, published daily (Sunday through Friday) in Somerset, KY
Stanton Ranger District: *The Clay City Times*, published weekly (Thursday) in Stanton, KY
Stearns Ranger District: *McCreary County Record*, published weekly (Tuesday) in Whitley City, KY

National Forests in Florida, Florida

Forest Supervisor Decisions

The Tallahassee Democrat, published daily in Tallahassee, FL

District Ranger Decisions

Apalachicola Ranger District: *Calhoun-Liberty Journal,* published weekly (Wednesday) in Bristol, FL

Lake George Ranger District: *The Ocala Star Banner,* published daily in Ocala, FL
Osceola Ranger District: *The Lake City Reporter,* published daily (Monday–Saturday) in Lake City, FL
Seminole Ranger District: *The Daily Commercial,* published daily in Leesburg, FL
Wakulla Ranger District: *The Tallahassee Democrat,* published daily in Tallahassee, FL

Francis Marion & Sumter National Forests, South Carolina

Forest Supervisor Decisions

The State, published daily in Columbia, SC

District Ranger Decisions

Andrew Pickens Ranger District: *The Daily Journal,* published daily (Tuesday through Saturday) in Seneca, SC
Enoree Ranger District: *Newberry Observer,* published tri-weekly (Monday, Wednesday, and Friday) in Newberry, SC
Long Cane Ranger District: *The State,* published daily in Columbia, SC
Wambaw Ranger District: *Post and Courier,* published daily in Charleston, SC
Witherbee Ranger District: *Post and Courier,* published daily in Charleston, SC

George Washington and Jefferson National Forests, Virginia and West Virgina

Forest Supervisor Decisions

Roanoke Times, published daily in Roanoke, VA

District Ranger Decisions

Clinch Ranger District: *Coalfield Progress,* published bi-weekly (Tuesday and Thursday) in Norton, VA
Deerfield Ranger District: *Daily News Leader,* published daily in Staunton, VA
Dry River Ranger District: *Daily News Record,* published daily (except Sunday) in Harrisonburg, VA
Glenwood/Pedlar Ranger District: *Roanoke Times,* published daily in Roanoke, VA
James River Ranger District: *Virginian Review,* published daily (except Sunday) in Covington, VA
Lee Ranger District: *Shenandoah Valley Herald,* published weekly (Wednesday) in Woodstock, VA
Mount Rogers National Recreation Area: *Bristol Herald Courier,* published daily in Bristol, VA
New Castle Ranger District: *Roanoke Times,* published daily in Roanoke, VA
New River Ranger District: *Roanoke Times,* published daily in Roanoke, VA
Warm Springs Ranger District: *The Recorder,* published weekly (Thursday) in Monterey, VA

Kisatchie National Forest, Louisiana

Forest Supervisor Decisions

The Town Talk, published daily in Alexandria, LA

District Ranger Decisions

Calcasieu Ranger District: *The Town Talk,* (newspaper of record) published daily in Alexandria, LA
The Leesville Ledger, (secondary) published tri-weekly (Tuesday, Friday, and Sunday) in Leesville, LA
Caney Ranger District: *Minden Press Herald,* (newspaper of record) published daily in Minden, LA
Homer Guardian Journal, (secondary) published weekly (Wednesday) in Homer, LA
Catahoula Ranger District: *The Town Talk,* published daily in Alexandria, LA
Kisatchie Ranger District: *Natchitoches Times,* published daily (Tuesday thru Friday and on Sunday) in Natchitoches, LA
Winn Ranger District: *Winn Parish Enterprise,* published weekly (Wednesday) in Winnfield, LA

Land Between the Lakes National Recreation Area, Kentucky and Tennessee

Area Supervisor Decisions

The Paducah Sun, published daily in Paducah, KY

National Forests in Mississippi, Mississippi

Forest Supervisor Decisions

Clarion-Ledger, published daily in Jackson, MS

District Ranger Decisions

Bienville Ranger District: *Clarion-Ledger,* published daily in Jackson, MS
Chickasawhay Ranger District: *Clarion-Ledger,* published daily in Jackson, MS
Delta Ranger District: *Clarion-Ledger,* published daily in Jackson, MS
De Soto Ranger District: *Clarion-Ledger,* published daily in Jackson, MS
Holly Springs Ranger District: *Clarion-Ledger,* published daily in Jackson, MS
Homochitto Ranger District: *Clarion-Ledger,* published daily in Jackson, MS
Tombigbee Ranger District: *Clarion-Ledger,* published daily in Jackson, MS

National Forests in North Carolina, North Carolina

Forest Supervisor Decisions

The Asheville Citizen-Times, published daily in Asheville, NC

District Ranger Decisions

Appalachian Ranger District: *The Asheville Citizen-Times,* published daily in Asheville, NC
Cheoah Ranger District: *Graham Star,* published weekly (Thursday) in Robbinsville, NC
Croatan Ranger District: *The Sun Journal,* published daily (except Saturday) in New Bern, NC
Grandfather Ranger District: *McDowell News,* published daily in Marion, NC
Highlands Ranger District: *The Highlander,* published weekly (mid May–mid Nov, Tues & Fri; mid Nov–mid May, Tues only) in Highlands, NC
Pisgah Ranger District: *The Asheville Citizen-Times,* published daily in Asheville, NC
Tusquitee Ranger District: *Cherokee Scout*, published weekly (Wednesday) in Murphy, NC
Uwharrie Ranger District: *Montgomery Herald*, published weekly (Wednesday) in Troy, NC
Wayah Ranger District: *The Franklin Press*, published bi-weekly (Tuesday and Friday) in Franklin, NC

Ouachita National Forest, Arkansas and Oklahoma

Forest Supervisor Decisions

Arkansas Democrat-Gazette, published daily in Little Rock, AR

District Ranger Decisions

Caddo Ranger District: *Arkansas Democrat-Gazette*, published daily in Little Rock, AR
Fourche Ranger District: *Arkansas Democrat-Gazette*, published daily in Little Rock, AR
Jessieville/Winona Ranger District: *Arkansas Democrat-Gazette*, published daily in Little Rock, AR
Mena/Oden Ranger District: *Arkansas Democrat-Gazette*, published daily in Little Rock, AR
Oklahoma Ranger District (Choctaw; Kiamichi; and Tiak) *Tulsa World*, published daily in Tulsa, AR
Poteau/Cold Springs Ranger District: *Arkansas Democrat-Gazette*, published daily in Little Rock, AR

Womble Ranger District: *Arkansas Democrat-Gazette*, published daily in Little Rock, AR

Ozark-St. Francis National Forests, Arkansas

Forest Supervisor Decisions

The Courier, published daily (Tuesday through Sunday) in Russellville, AR

District Ranger Decisions

Bayou Ranger District: *The Courier*, published daily (Tuesday through Sunday) in Russellville, AR

Boston Mountain Ranger District: *Southwest Times Record*, published daily in Fort Smith, AR

Buffalo Ranger District: *Newton County Times*, published weekly in Jasper, AR

Magazine Ranger District: *Southwest Times Record*, published daily in Fort Smith, AR

Pleasant Hill Ranger District: *Johnson County Graphic*, published weekly (Wednesday) in Clarksville, AR

St. Francis National Forest: *The Daily World*, published daily (Sunday through Friday) in Helena, AR

Sylamore Ranger District: *Stone County Leader*, published weekly (Wednesday) in Mountain View, AR

National Forests and Grasslands in Texas, Texas

Forest Supervisor Decisions

The Lufkin Daily News, published daily in Lufkin, TX

District Ranger Decisions

Angelina National Forest: *The Lufkin Daily News*, published daily in Lufkin, TX

Caddo & LBJ National Grasslands: *Denton Record-Chronicle*, published daily in Denton, TX

Davy Crockett National Forest: *The Lufkin Daily News*, published daily in Lufkin, TX

Sabine National Forest: *The Lufkin Daily News*, published daily in Lufkin, TX

Sam Houston National Forest: *The Courier*, published daily in Conroe, TX

Dated: October 24, 2005.

Thomas A. Peterson,

Deputy Regional Forester.

[FR Doc. 05–21698 Filed 10–31–05; 8:45 am]

BILLING CODE 3410–11–M

DEPARTMENT OF AGRICULTURE

Forest Service

Hoosier National Forest, IN; German Ridge Restoration Project

AGENCY: Forest Service, USDA.

ACTION: Notice of availability of an environmental impact statement.

SUMMARY: The USDA Forest Service, Hoosier National Forest has completed a final environmental impact statement (FEIS) to disclose the environmental consequences of a vegetation restoration project. The FEIS addresses the potential environmental impacts of replacing pine plantations in the German Ridge area of Perry County, Indiana with native hardwood communities.

Copies: To receive a CD of the FEIS, request one from Ron Ellis, NEPA Coordinator; Hoosier National Forest; 811 Constitution Avenue; Bedford, IN 47421. To request a CD electronically, send a message with your request to *r9_hoosier_website@fs.fed.us.* If a hard copy is desired instead, use the same contact information.

Appeal Period: The publication date of the legal notice in the newspaper of record (*The Hoosier Times,* published in Bloomington and Bedford, Indiana) is the exclusive means for calculating the period for filing an appeal. An appeal must be filed within 45 days of the date of publication of the legal notice.

ADDRESSES: Regional Forester Randy Moore is the Deciding Official with whom an appeal is to be filed. His address is: 626 East Wisconsin Ave.; Milwaukee, WI 53202; electronic submission of an appeal: *appeals-eastern-regional-office@fs.fed.us* (dashes, not underscores); electronic file formats; txt, html, pdf, or any file format viewable in Microsoft Office applications; fax: 414–944–3963; office hours (for those hand delivering an appeal): 7:30 a.m. to 4 p.m. Central Standard Time, Monday–Friday.

FOR FURTHER INFORMATION CONTACT: Ron Ellis, NEPA Coordinator, Hoosier National Forest, USDA Forest Service; telephone: 812–275–5987. Address under Copies. Another means of obtaining information is to visit the Forest Web page at *www.fs.fed.us/r9/hoosier*—click on ''Forest Projects'', then ''Scoping Package,'' and finally ''German Ridge Restoration.''

Preferred Alternative

The preferred alternative is to implement the proposed action, which would fulfill the goals and objectives of the *Forest Plan* involving the restoration of native communities; replace pine plantations with native hardwood communities that include a strong component of oaks, hickories, and other fire-adapted plants; and restore natural vegetative conditions to the barrens within the project area.

To accomplish those goals, the Hoosier National Forest would during the next six or seven years: (1) Use prescribed burning on approximately 2,170 acres, (2) thin approximately 215 acres, (3) implement pine removal on approximately 355 acres, and (4) complete shelterwood harvest on approximately 120 acres. Additional activities would also be pursued to improve wildlife habitat, maintain a recreational trail, and enhance vegetation conditions within the project area.

Responsible Official

Kenneth G. Day, Forest Supervisor; Hoosier National Forest; 811 Constitution Avenue; Bedford, Indiana 47421.

(Authority: 40 CFR 1501.7 and 1508.22; Forest Service Handbook 1909.15, Section 21)

Dated: October 21, 2005.

Kenneth G. Day,

Forest Supervisor.

[FR Doc. 05–21764 Filed 10–31–05; 8:45 am]

BILLING CODE 3410–11–M

DEPARTMENT OF COMMERCE

Submission for OMB Review; Comment Request

The Department of Commerce has submitted to the Office of Management and Budget (OMB) for clearance the following proposal for collection of information under the provisions of the Paperwork Reduction Act (44 U.S.C. Chapter 35).

Agency: National Oceanic and Atomospheric Administration (NOAA).

Title: Application and Reports for Scientific Research and Enhancement Permits Under the Endangered Species Act.

Form Number(s): None.

OMB Approval Number: 0648–0402.

Type of Request: Regular submission.

Burden Hours: 2,280.

Number of Respondents: 113.

Average Hours per Response: Permit applications, 30 hours; modification requests, 10 hours; annual reports and final reports, 10 hours.

Needs and Uses: The Endangered Species Act (ESA) prohibits the taking of endangered species. Section 10 of the ESA allows for certain exceptions to this

prohibition, such as a taking for scientific research purposes or to enhance the propagation or survival of species listed as threatened or endangered under the ESA. NOAA has issued regulations to provide for application and reporting for exceptions related to scientific research or to enhance the propagation of threatened or endangered species. The information used to evaluate the proposed activity (permits) and on-going activities (reports) is necessary for NMFS to ensure the conservation of the species under the ESA.

Affected Public: Individuals or households; business or other for-profit organizations, not-for-profit institutions; federal government; state, local or tribal government.

Frequency: Annually.

Respondent's Obligation: Mandatory.

OMB Desk Officer: David Rostker, (202) 395–3897.

Copies of the above information collection proposal can be obtained by calling or writing Diana Hynek, Departmental Paperwork Clearance Officer, (202) 482–0266, Department of Commerce, Room 6625, 14th and Constitution Avenue, NW., Washington, DC 20230 (or via the Internet at *dHynek@doc.gov*).

Written comments and recommendations for the proposed information collection should be sent within 30 days of publication of this notice to David Rostker, OMB Desk Officer, FAX number (202) 395–7285, or *David_Rostker@omb.eop.gov.*

Dated: October 26, 2005.

Gwellnar Banks,

Management Analyst, Office of the Chief Information Officer.

[FR Doc. 05–21683 Filed 10–31–05; 8:45 am]

BILLING CODE 3510–22–P

DEPARTMENT OF COMMERCE

Submission for OMB Review; Comment Request

The Department of Commerce has submitted to the Office of Management and Budget (OMB) for clearance the following proposal for collection of information under the provisions of the Paperwork Reduction Act (44 U.S.C. Chapter 35).

Agency: National Oceanic and Atmospheric Administration (NOAA).

Title: Alaska Region Scale and Catch Weighing Requirements.

Form Number(s): None.

OMB Approval Number: 0648–0330.

Type of Request: Regular submission.

Burden Hours: 6,904.

Number of Respondents: 103.

Average Hours per Response: 6 minutes for at-sea inspection request; 45 minutes for record of daily scale tests; 45 minutes for printed output of at-sea scale weight; 45 minutes for printed output of State of Alaska scale weight; 63 hours for scale type evaluation; 6 minutes for at-sea scale approval report/sticker; 6 minutes for application to inspect scales on behalf of NMFS; 2 hours for observer sampling station inspection request; 0 hours for certified bins for volumetric estimates of catch weight; 5 minutes for inspection request for inshore catch monitoring and control plan (CMCP); 40 hours for inshore processors CMCP; 8 hours for CMCP addendum; 5 minutes for notification of observer offloading schedule for Bering Sea and Aleutian Island pollock; 2 minutes for prior notice to observers of scale tests; and 40 hours for crab catch monitoring plan.

Needs and Uses: The National Marine Fisheries Service (NMFS) manages the commercial groundfish harvest off Alaska using an annual total allowable catch for each species based on ''round'' weight, or the weight of the fish prior to processing. However, much of the fish harvested off Alaska is harvested by catcher/processors that process the catch at-sea. NMFS estimates the total weight of fish harvested by those trawl gear catcher/processors by requiring the vessel to weigh all or part of their catch on a motion-compensated scale. This collection describes the steps involved and the procedure for: evaluating scales prior to NMFS approval for use, inspecting and testing approved scales onboard vessels, recordkeeping and audit trails, coordinating with onboard and onshore observers, and providing NMFS with a catch monitoring plan for crab, offshore groundfish, and inshore groundfish.

Affected Public: Business or other for-profit organizations; individuals or households.

Frequency: Daily for time period.

Respondent's Obligation: Required to obtain or retain benefits.

OMB Desk Officer: David Rostker, (202) 395–3897.

Copies of the above information collection proposal can be obtained by calling or writing Diana Hynek, Departmental Paperwork Clearance Officer, (202) 482–0266, Department of Commerce, Room 6625, 14th and Constitution Avenue, NW., Washington, DC 20230 (or via the Internet at *dHynek@doc.gov*).

Written comments and recommendations for the proposed information collection should be sent within 30 days of publication of this notice to David Rostker, OMB Desk Officer, FAX number (202) 395–7285, or *David_Rostker@omb.eop.gov*.

Dated: October 26, 2005.

Gwellnar Banks,

Management Analyst, Office of the Chief Information Officer.

[FR Doc. 05–21684 Filed 10–31–05; 8:45 am]

BILLING CODE 3510–22–P

DEPARTMENT OF COMMERCE

Submission for OMB Review; Comment Request

The Department of Commerce has submitted to the Office of Management and Budget (OMB) for clearance the following proposal for collection of information under the provisions of the Paperwork Reduction Act (44 U.S.C. Chapter 35).

Agency: National Oceanic and Atmospheric Administration (NOAA).

Title: Gear-Marking Requirements for Atlantic Large Whale Take Reduction Plan.

Form Number(s): None.

OMB Approval Number: 0648–0364.

Type of Request: Regular submission.

Burden Hours: 2,572.

Number of Respondents: 4,506.

Average Hours per Response: 1 minute.

Needs and Uses: The gear-marking requirements will assist the National Marine Fisheries Service (NMFS) in obtaining detailed information about which fisheries or specific parts of fishing gear are responsible for the incidental mortality and serious injury of North Atlantic right, humpback, and fin whales obtained as a result of gear-marking, which links incidental mortality and serious injury of marine mammals to specific gear types, locations, and fishermen. The information will enable NMFS to focus future management measures on specific problem areas and issues and avoid instituting potentially overly broad measures that affect fisheries unnecessarily. This collection of information would affect the following fisheries: Northeast and Mid-Atlantic lobster trap/pot fisheries; Atlantic blue crab trap/pot fisheries; Atlantic mixed species trap/pot fisheries targeting crab (red, Jonah, and rock), hagfish, finfish (black sea bass, scup, tautog, cod, haddock, pollock, redfish, and white hake), conch/whelk, and shrimp; Northeast and Mid-Atlantic anchored gillnet; Northeast drift gillnet; Mid-Atlantic coastal gillnet; Southeast shark gillnet; and Southeast Atlantic gillnet.

Affected Public: Individuals or households; business or other for-profit organizations.

Frequency: Annually.

Respondent's Obligation: Mandatory.

OMB Desk Officer: David Rostker, (202) 395–3897.

Copies of the above information collection proposal can be obtained by calling or writing Diana Hynek, Departmental Paperwork Clearance Officer, (202) 482–0266, Department of Commerce, Room 6625, 14th and Constitution Avenue, NW., Washington, DC 20230 (or via the Internet at *dHynek@doc.gov*).

Written comments and recommendations for the proposed information collection should be sent within 30 days of publication of this notice to David Rostker, OMB Desk Officer, FAX number (202) 395–7285, or *David_Rostker@omb.eop.gov*.

Dated: October 26, 2005.

Gwellnar Banks,

Management Analyst, Office of the Chief Information Officer.

[FR Doc. 05–21685 Filed 10–31–05; 8:45 am]

BILLING CODE 3510–22–P

DEPARTMENT OF COMMERCE

Foreign–Trade Zones Board

[Order No. 1416]

Approval of Manufacturing Authority, Within Foreign–Trade Zone 222, Montgomery, Alabama, Mobis Alabama, LLC, (Automotive Components and Subassemblies)

Pursuant to its authority under the Foreign–Trade Zones Act of June 18, 1934, as amended (19 U.S.C. 81a–81u)(the Act), the Foreign–Trade Zones Board (the Board) adopts the following Order:

Whereas, the Montgomery Area Chamber of Commerce, grantee of FTZ 222, has requested authority under Section 400.32(b)(1) of the Board's regulations on behalf of Mobis Alabama, LLC, to manufacture automotive components and subassemblies under FTZ procedures within FTZ 222 Site 3, Montgomery, Alabama (Docket 58–2004, filed 12–15–2004);

Whereas, pursuant to 15 CFR 400.32(b)(1), the Commerce Department's Assistant Secretary for Import Administration has the authority to act for the Board in making such decisions on new manufacturing/processing activity under certain circumstances, including situations where the proposed activity is the same, in terms of products involved, to activity recently approved by the Board (§ 400.32(b)(1)(i));

Whereas, the FTZ Staff has reviewed the proposal, taking into account the criteria of Section 400.31, and the Executive Secretary has recommended approval, subject to restriction; and,

Whereas, approval is subject to a restriction requiring that all foreign items classified under HTSUS 3921.90 and Textile Category 229 must be admitted to the zone under privileged foreign status (19 CFR § 146.41).

Now, therefore, the Assistant Secretary for Import Administration, acting for the Board pursuant to Section 400.32(b)(1), concurs in the recommendation and hereby approves the request subject to the Act and the Board's regulations, including Section 400.28.

Signed at Washington, DC, this 21st day of October 2005.

Joseph A. Spetrini,

Acting Assistant Secretary of Commerce for Import Administration, Alternate Chairman, Foreign–Trade Zones Board.

Attest:

Dennis Puccinelli,

Executive Secretary.

[FR Doc. 05–21771 Filed 10–31–05; 8:45 am]

BILLING CODE 3510–DS–S

DEPARTMENT OF COMMERCE

Foreign–Trade Zones Board

[Docket 54–2005]

Foreign–Trade Zone 104 -- Chatham County, Georgia, Application for Expansion

An application has been submitted to the Foreign–Trade Zones (FTZ) Board (the Board) by the Savannah Airport Commission, grantee of FTZ 104, requesting authority to expand its zone to include a site in Liberty County, Georgia, adjacent to the Savannah Customs port of entry. The application was submitted pursuant to the provisions of the Foreign–Trade Zones Act, as amended (19 U.S.C. 81a–81u), and the regulations of the Board (15 CFR Part 400). It was formally filed on October 24, 2005.

FTZ 104 was approved on April 18, 1984 (Board Order 256, 49 FR 17789, 4/25/84) and expanded on October 13, 1995 (Board Order 775, 60 FR 54469, 10/24/95), and on December 18, 2001 (Board Order 1197, 66 FR 67183, 12/28/01).

FTZ 104 currently consists of the following sites (5,487 acres) in the Savannah, Georgia, area: *Site 1* (32 acres) -- within the 3,400–acre Savannah International Airport; *Site 2* (1,075 acres) -- includes the 849–acre Garden City (Containerport) Terminal, 2 Main Street, Chatham and the 226–acre Ocean Terminal, 950 West River Street, Savannah; *Site 2a* (1 acre, 43,560 sq. ft.) -- 730 King George Boulevard, Savannah; *Site 3* (1,820 acres) -- Crossroads Business Center, I–95 and Godley Road, Chatham County; *Site 4* (1,353 acres) -- SPA Industrial Park, 1 mile east of the I–95/U.S. 80 interchange in Chatham County; *Site 5* (24 acres) -- within the 94–acre Savannah International Trade and Convention Center, One International Drive, Savannah; and, *Site 6* (1,182 acres) -- Mulberry Grove site, Interstate 95 and State Highway 21, Savannah.

The applicant is now requesting authority to expand the zone to include a site in Liberty County. *Proposed Site 7* (1,592 acres) consists of three parcels within a 2,140–acre portion of the Tradeport Business Center industrial park located around 380 Sunbury Road in Midway: *Proposed Site 7A* -- Tradeport West (602 acres, 2 parcels) located west of Interstate 95 (near Exit 76), east of US Highway 17 and south of US Highway 84; and, *Proposed Site 7B* -- Tradeport East (990 acres) located east of Interstate 95 (near Exit 76) and north of Islands Highway. The proposed site is owned by the Liberty County Development Authority and is suitable for warehousing, light manufacturing, distribution and logistics activities. No specific manufacturing requests are being made at this time. Such requests would be made to the Board on a case–by case basis.

In accordance with the Board's regulations, a member of the FTZ Staff has been designated examiner to investigate the application and report to the Board.

Public comment on the application is invited from interested parties. Submissions (original and 3 copies) shall be addressed to the Board's Executive Secretary at one of the following addresses:

1. *Submissions via Express/Package Delivery Services*: Foreign–Trade Zones Board, U.S. Department of Commerce, Franklin Court Building–Suite 4100W, 1099 14th Street, NW., Washington, DC 20005; or,
2. *Submissions via the U.S. Postal Service:* Foreign–Trade Zones Board, U.S. Department of Commerce, FCB–Suite 4100W, 1401 Constitution Avenue, NW., Washington, DC 20230.

The closing period for their receipt is January 3, 2006. Rebuttal comments in response to material submitted during the foregoing period may be submitted during the subsequent 15–day period (to January 17, 2006).

A copy of the application and accompanying exhibits will be available

during this time for public inspection at the Office of the Foreign–Trade Zones Board's Executive Secretary at the first address listed above, and at the U.S. Department of Commerce, Export Assistance Center, 111 East Liberty Street, Suite 202, Savannah, GA 31401.

Dated: October 25, 2005.

Dennis Puccinelli,

Executive Secretary.

[FR Doc. 05–21770 Filed 10–31–05; 8:45 am]

BILLING CODE 3510–DS–S

DEPARTMENT OF COMMERCE

International Trade Administration

Antidumping or Countervailing Duty Order, Finding, or Suspended Investigation; Opportunity to Request Administrative Review

AGENCY: Import Administration, International Trade Administration, Department of Commerce.

ACTION: Notice of Opportunity to Request Administrative Review of Antidumping or Countervailing Duty Order, Finding, or Suspended Investigation.

FOR FURTHER INFORMATION CONTACT: Sheila E. Forbes, Office of AD/CVD Operations, Office 4, Import Administration, International Trade Administration, U.S. Department of Commerce, 14th Street and Constitution Avenue, NW., Washington, DC 20230, telephone: (202) 482–4697.

SUPPLEMENTARY INFORMATION:

Background

Each year during the anniversary month of the publication of an antidumping or countervailing duty order, finding, or suspension of investigation, an interested party, as defined in section 771(9) of the Tariff Act of 1930, as amended, may request, in accordance with section 351.213 (2002) of the Department of Commerce (the Department) Regulations, that the Department conduct an administrative review of that antidumping or countervailing duty order, finding, or suspended investigation.

Opportunity to Request a Review:

Not later than the last day of November 2005,[1] interested parties may request administrative review of the following orders, findings, or suspended investigations, with anniversary dates in November for the following periods:

Antidumping Duty Proceedings	Periods
ARGENTINA: Barbed Wire & Barbless Fencing Wire.	
A–357–405	11/1/04 - 10/31/05
BRAZIL: Circular Welded Non–Alloy Steel Pipe.	
A–351–809	11/1/04 - 10/31/05
HUNGARY: Sulfanilic Acid.	
A–437–804	11/1/04 - 10/31/05
KAZAKHSTAN: Certain Hot–Rolled Carbon Steel Flat Products.	
A–834–806	11/1/04 - 10/31/05
MEXICO: Circular Welded Non–Alloy Steel Pipe.	
A–201–805	11/1/04 - 10/31/05
NETHERLANDS: Certain Hot–Rolled Carbon Steel Flat Products.	
A–421–807	11/1/04 - 10/31/05
PORTUGAL: Sulfanilic Acid.	
A–471–806	11/1/04 - 10/31/05
REPUBLIC OF KOREA: Circular Welded Non–Alloy Steel Pipe.	
A–580–809	11/1/04 - 10/31/05
ROMANIA: Certain Hot–Rolled Carbon Steel Flat Products.	
A–485–806	11/1/04 - 10/31/05
TAIWAN: Certain Hot–Rolled Carbon Steel Flat Products.	
A–583–835	11/1/04 - 10/31/05
TAIWAN: Circular Welded Non–Alloy Steel Pipe.	
A–583–814	11/1/04 - 10/31/05
THAILAND: Certain Hot–Rolled Carbon Steel Flat Products.	
A–549–817	11/1/04 - 10/31/05
THE PEOPLE'S REPUBLIC OF CHINA: Certain Hot–Rolled Carbon Steel Flat Products.	
A–570–865	11/1/04 - 10/31/05
THE PEOPLE'S REPUBLIC OF CHINA: Certain Cut–to-Length Carbon Steel.	
A–570–849	11/1/04 - 10/31/05
THE PEOPLE'S REPUBLIC OF CHINA: Fresh Garlic.	
A–570–831	11/1/04 - 10/31/05
THE PEOPLE'S REPUBLIC OF CHINA: Paper Clips.	
A–570–826	11/1/04 - 10/31/05
THE PEOPLE'S REPUBLIC OF CHINA: Pure Magnesium in Granular Form.	
A–570–864	11/1/04 - 10/31/05
THE PEOPLE'S REPUBLIC OF CHINA: Refined Brown Aluminum Oxide.	
A–570–882	11/1/04 - 10/31/05
UKRAINE: Certain Hot–Rolled Carbon Steel Flat Products.	
A–823–811	11/1/04 - 10/31/05
Countervailing Duty Proccedings	
HUNGARY: Sulfanilic Acid.	
C–437–805	1/1/04 - 12/31/04
Suspension Agreements	

[1] Or the next business day, if the deadline falls on a weekend, federal holiday or any other day when the Department is closed.

UKRAINE: Certain Cut–to-Length Carbon Steel. A–823–808	11/1/04 - 10/31/05

In accordance with section 351.213(b) of the regulations, an interested party as defined by section 771(9) of the Act may request in writing that the Secretary conduct an administrative review. For both antidumping and countervailing duty reviews, the interested party must specify the individual producers or exporters covered by an antidumping finding or an antidumping or countervailing duty order or suspension agreement for which it is requesting a review, and the requesting party must state why it desires the Secretary to review those particular producers or exporters.[2] If the interested party intends for the Secretary to review sales of merchandise by an exporter (or a producer if that producer also exports merchandise from other suppliers) which were produced in more than one country of origin and each country of origin is subject to a separate order, then the interested party must state specifically, on an order–by-order basis, which exporter(s) the request is intended to cover.

As explained in *Antidumping and Countervailing Duty Proceedings: Assessment of Antidumping Duties*, 69 FR 23954 (May 6, 2003), the Department has clarified its practice with respect to the collection of final antidumping duties on imports of merchandise where intermediate firms are involved. The public should be aware of this clarification in determining whether to request an administrative review of merchandise subject to antidumping findings and orders. See also the Import Administration web site at http://ia.ita.doc.gov.

Six copies of the request should be submitted to the Assistant Secretary for Import Administration, International Trade Administration, Room 1870, U.S. Department of Commerce, 14th Street & Constitution Avenue, N.W., Washington, D.C. 20230. The Department also asks parties to serve a copy of their requests to the Office of Antidumping/Countervailing Operations, Attention: Sheila Forbes, in room 3065 of the main Commerce Building. Further, in accordance with section 351.303(f)(l)(i) of the regulations, a copy of each request must be served on every party on the Department's service list.

The Department will publish in the **Federal Register** a notice of ''Initiation of Administrative Review of Antidumping or Countervailing Duty Order, Finding, or Suspended Investigation'' for requests received by the last day of November 2005. If the Department does not receive, by the last day of November 2005, a request for review of entries covered by an order, finding, or suspended investigation listed in this notice and for the period identified above, the Department will instruct the U.S. Customs and Border Protection to assess antidumping or countervailing duties on those entries at a rate equal to the cash deposit of (or bond for) estimated antidumping or countervailing duties required on those entries at the time of entry, or withdrawal from warehouse, for consumption and to continue to collect the cash deposit previously ordered.

This notice is not required by statute but is published as a service to the international trading community.

Dated: October 21, 2005.

Holly A. Kuga,

Senior Office Director, AD/CVD Operations, Office 4, for Import Administration.

[FR Doc. 05–21767 Filed 10–31–05; 8:45 am]

BILLING CODE 3510–DS–S

DEPARTMENT OF COMMERCE

International Trade Administration

Initiation of Five-year (''Sunset'') Reviews

AGENCY: Import Administration, International Trade Administration, Department of Commerce.

SUMMARY: In accordance with section 751(c) of the Tariff Act of 1930, as amended (''the Act''), the Department of Commerce (''the Department'') is automatically initiating five-year (''Sunset Reviews'') of the antidumping and countervailing duty orders listed below. The International Trade Commission (''the Commission'') is publishing concurrently with this notice its notice of *Institution of Five-Year Review* which covers these same orders.

EFFECTIVE DATE: November 1, 2005.

FOR FURTHER INFORMATION CONTACT: The Department official identified in the *Initiation of Review(s)* section below at AD/CVD Operations, Import Administration, International Trade Administration, U.S. Department of Commerce, 14th & Constitution Ave., NW, Washington, DC 20230. For information from the Commission contact Mary Messer, Office of Investigations, U.S. International Trade Commission at (202) 205–3193.

SUPPLEMENTARY INFORMATION:

Background

The Department's procedures for the conduct of Sunset Reviews are set forth in 19 CFR 351.218. Guidance on methodological or analytical issues relevant to the Department's conduct of Sunset Reviews is set forth in the Department's Policy Bulletin 98.3 — *Policies Regarding the Conduct of Five-year (''Sunset'') Reviews of Antidumping and Countervailing Duty Orders; Policy Bulletin*, 63 FR 18871 (April 16, 1998) (''*Sunset Policy Bulletin*'').

Initiation of Reviews

In accordance with 19 CFR 351.218(c), we are initiating the Sunset Reviews of the following antidumping and countervailing duty orders:

DOC Case No.	ITC Case No.	Country	Product	Department Contact
A–583–080	AA1921–197	Taiwan	Carbon Steel Plate	Dana Mermelstein (202) 482–1391
A–602–803	731–TA–612	Australia	Corrosion–Resistant Carbon Steel Flat Products	David Goldberger (202) 482–4136
A–122–822	731–TA–614	Canada	Corrosion–Resistant Carbon Steel Flat Products	Dana Mermelstein (202) 482–1391
A–427–808	731–TA–615	France	Corrosion–Resistant Carbon Steel Flat Products	Dana Mermelstein (202) 482–1391
A–428–815	731–TA–616	Germany	Corrosion–Resistant Carbon Steel Flat Products	Dana Mermelstein (202) 482–1391
A–588–826	731–TA–617	Japan	Corrosion–Resistant Carbon Steel Flat Products	David Goldberger (202) 482–4136
A–580–816	731–TA–618	South Korea	Corrosion–Resistant Carbon Steel Flat Products	David Goldberger (202) 482–4136

[2] If the review request involves a non-market economy and the parties subject to the review request do not qualify for separate rates, all other exporters of subject merchandise from the non-market economy country who do not have a separate rate will be covered by the review as part of the single entity of which the named firms are a part.

DOC Case No.	ITC Case No.	Country	Product	Department Contact
A–423–805	731–TA–573	Belgium	Cut–to-Length Carbon Steel Plate	Dana Mermelstein (202) 482–1391
A–351–817	731–TA–574	Brazil	Cut–to-Length Carbon Steel Plate	Dana Mermelstein (202) 482–1391
A–405–802	731–TA–576	Finland	Cut–to-Length Carbon Steel Plate	Dana Mermelstein (202) 482–1391
A–428–816	731–TA–578	Germany	Cut–to-Length Carbon Steel Plate	David Goldberger (202) 482–4136
A–201–809	731–TA–582	Mexico	Cut–to-Length Carbon Steel Plate	Dana Mermelstein (202) 482–1391
A–455–802	731–TA–583	Poland	Cut–to-Length Carbon Steel Plate	Dana Mermelstein (202) 482–1391
A–485–803	731–TA–584	Romania	Cut–to-Length Carbon Steel Plate	Dana Mermelstein (202) 482–1391
A–469–803	731–TA–585	Spain	Cut–to-Length Carbon Steel Plate	Dana Mermelstein (202) 482–1391
A–401–805	731–TA–576	Sweden	Cut–to-Length Carbon Steel Plate	David Goldberger (202) 482–4136
A–412–813	731–TA–587	UK	Cut–to-Length Carbon Steel Plate	Dana Mermelstein (202) 482–1391
C–427–810	701–TA–348	France	Corrosion–Resistant Carbon Steel Flat Products	Dana Mermelstein (202) 482–1391
C–580–818	701–TA–350	South Korea	Corrosion–Resistant Carbon Steel Flat Products	David Goldberger (202) 482–4136
C–423–806	701–TA–319	Belgium	Cut–to-Length Carbon Steel Plate	Dana Mermelstein (202) 482–1391
C–351–818	701–TA–320	Brazil	Cut–to-Length Carbon Steel Plate	Dana Mermelstein (202) 482–1391
C–201–810	701–TA–325	Mexico	Cut–to-Length Carbon Steel Plate	Dana Mermelstein (202) 482–1391
C–469–804	701–TA–326	Spain	Cut–to-Length Carbon Steel Plate	Dana Mermelstein (202) 482–1391
C–401–804	701–TA–327	Sweden	Cut–to-Length Carbon Steel Plate	David Goldberger (202) 482–4136
C–412–815	701–TA–328	UK	Cut–to-Length Carbon Steel Plate	Dana Mermelstein (202) 482–1391

Filing Information

As a courtesy, we are making information related to Sunset proceedings, including copies of the Department's regulations regarding Sunset Reviews (19 CFR 351.218) and *Sunset Policy Bulletin*, the Department's schedule of Sunset Reviews, case history information (*i.e.*, previous margins, duty absorption determinations, scope language, import volumes), and service lists available to the public on the Department's sunset Internet website at the following address: ''http://ia.ita.doc.gov/sunset/.'' All submissions in these Sunset Reviews must be filed in accordance with the Department's regulations regarding format, translation, service, and certification of documents. These rules can be found at 19 CFR 351.303.

Pursuant to 19 CFR 351.103(c), the Department will maintain and make available a service list for these proceedings. To facilitate the timely preparation of the service list(s), it is requested that those seeking recognition as interested parties to a proceeding contact the Department in writing within 15 days of the publication of the Notice of Initation.

Because deadlines in Sunset Reviews can be very short, we urge interested parties to apply for access to proprietary information under administrative protective order (''APO'') immediately following publication in the **Federal Register** of the notice of initiation of the sunset review. The Department's regulations on submission of proprietary information and eligibility to receive access to business proprietary information under APO can be found at 19 CFR 351.304–306.

Information Required from Interested Parties

Domestic interested parties (defined in section 771(9)(C), (D), (E), (F), and (G) of the Act and 19 CFR 351.102(b)) wishing to participate in these Sunset Reviews must respond not later than 15 days after the date of publication in the **Federal Register** of this notice of initiation by filing a notice of intent to participate. The required contents of the notice of intent to participate are set forth at 19 CFR 351.218(d)(1)(ii). In accordance with the Department's regulations, if we do not receive a notice of intent to participate from at least one domestic interested party by the 15-day deadline, the Department will automatically revoke the orders without further review. *See* 19 CFR 351.218(d)(1)(iii).

If we receive an order–specific notice of intent to participate from a domestic interested party, the Department's regulations provide that *all parties* wishing to participate in the Sunset Review must file complete substantive responses not later than 30 days after the date of publication in the **Federal Register** of this notice of initiation. The required contents of a substantive response, on an order–specific basis, are set forth at 19 CFR 351.218(d)(3). Note that certain information requirements differ for respondent and domestic parties. Also, note that the Department's information requirements are distinct from the Commission's information requirements. Please consult the Department's regulations for information regarding the Department's conduct of Sunset Reviews.[1] Please consult the Department's regulations at 19 CFR Part 351 for definitions of terms and for other general information concerning antidumping and countervailing duty proceedings at the Department.

This notice of initiation is being published in accordance with section 751(c) of the Act and 19 CFR 351.218(c).

Dated: October 24, 2005.

Holly A. Kuga,

Senior Office Director AD/CVD Operations, Office 4, for Import Administration.

[FR Doc. 05–21766 Filed 10–31–05; 8:45 am]

BILLING CODE 3510–DS–S

[1] In comments made on the interim final sunset regulations, a number of parties stated that the proposed five-day period for rebuttals to substantive responses to a notice of initiation was insufficient. This requirement was retained in the final sunset regulations at 19 CFR 351.218(d)(4). As provided in 19 CFR 351.302(b), however, the Department will consider individual requests for extension of that five-day deadline based upon a showing of good cause.

DEPARTMENT OF COMMERCE

International Trade Administration

Antidumping or Countervailing Duty Order, Finding, or Suspended Investigation; Advance Notification of Sunset Reviews

AGENCY: Import Administration, International Trade Administration, Department of Commerce.

ACTION: Notice of Upcoming Sunset Reviews.

SUMMARY: Every five years, pursuant to section 751(c) of the Tariff Act of 1930, as amended, the Department of Commerce (''the Department'') and the International Trade Commission automatically initiate and conduct a review to determine whether revocation of a countervailing or antidumping duty order or termination of an investigation suspended under section 704 or 734 would be likely to lead to continuation or recurrence of dumping or a

countervailable subsidy (as appropriate) and of material injury. As a courtesy, the Department provides advance notice of the cases that are scheduled for sunset reviews one month before those reviews are initiated.

FOR FURTHER INFORMATION CONTACT: Zev Primor, Office 4, AD/CVD Operations, Import Administration, International Trade Administration, U.S. Department of Commerce at (202) 482–4114.

Upcoming Sunset Reviews

There are no sunset reviews scheduled for initiation in December 2005.

For information on the Department's procedures for the conduct of sunset reviews, *See* 19 CFR 351.218. This notice is not required by statute but is published as a service to the international trading community. Guidance on methodological or analytical issues relevant to the Department's conduct of sunset reviews is set forth in the Department's Policy Bulletin 98.3, ''Policies Regarding the Conduct of Five–Year (''Sunset'') Reviews of Antidumping and Countervailing Duty Orders;'' Policy Bulletin, 63 FR 18871 (April 16, 1998) (''Sunset Policy Bulletin''). The Notice of Initiation of Five–Year (''Sunset'') Reviews provides further information regarding what is required of all parties to participate in sunset reviews.

Dated: October 19, 2005.

Holly A. Kuga,

Senior Office Director, AD/CVD Operations, Office 4, for Import Administration.

[FR Doc. 05–21768 Filed 10–31–05; 8:45 am]

BILLING CODE 3510–DS–S

DEPARTMENT OF COMMERCE

International Trade Administration

(A–588–866)

Notice of Final Determination of Sales at Less Than Fair Value: Superalloy Degassed Chromium from Japan

AGENCY: Import Administration, International Trade Administration, Department of Commerce.

EFFECTIVE DATE: November 1, 2005.

SUMMARY: The Department of Commerce determines that imports of superalloy degassed chromium from Japan are being, or are likely to be, sold in the United States at less than fair value, as provided in section 735 of the Tariff Act of 1930, as amended (the Act). The final weighted–average dumping margins are listed below in the section entitled ''Final Determination of Investigation.''

FOR FURTHER INFORMATION CONTACT: Janis Kalnins or Minoo Hatten, Import Administration, International Trade Administration, U.S. Department of Commerce, 14th Street and Constitution Avenue, NW, Washington, DC 20230; telephone: (202) 482–1392 or (202) 482–1690, respectively.

SUPPLEMENTARY INFORMATION:

Background

On August 18, 2005, the Department of Commerce (the Department) published the preliminary determination of sales at less than fair value (LTFV) in the antidumping investigation of superalloy degassed chromium from Japan. *See Notice of Preliminary Determination of Sales at Less Than Fair Value: Superalloy Degassed Chromium from Japan*, 70 FR 48538 (August 18, 2005) (*Preliminary Determination*). We requested that parties comment on the *Preliminary Determination*. We did not make a decision on scope–clarification comments submitted by parties prior to the *Preliminary Determination*, as there was insufficient information on the record to draw a conclusion. Therefore, we invited parties to provide any new factual information on this issue and scope comments.

We received new factual information and scope comments from Tosoh Corporation and Tosoh Specialty Materials Corporation (collectively, Tosoh) and from Eramet Marietta Inc. (Eramet) and the Paper Allied–Industrial Chemical and Energy Workers International Union (collectively, the petitioners). We did not receive any comments, scope or otherwise, from JFE Material Co., Ltd. (JFE Material), during this investigation. While Mitsui & Co. (U.S.A.), Inc. (Mitsui), submitted scope comments prior to the *Preliminary Determination*, we have not received any comments from Mitsui since the *Preliminary Determination*. On September 21, 2005, the petitioners requested a hearing to discuss scope comments or rebuttal comments raised by interested parties in the investigation but then withdrew their request for a hearing on September 30, 2005. We did not receive any case or rebuttal briefs from any interested parties.

Scope Comments

All comments raised by parties to this investigation on superalloy degassed chromium from Japan are addressed in the Scope Comments Memorandum from Laurie Parkhill, Office Director, to Stephen J. Claeys, Deputy Assistant Secretary, dated October 25, 2005. As discussed in the Scope Comments Memorandum, the scope of the investigation remains unchanged from our preliminary determination. This Scope Comments Memorandum, which is a public document, is on file in the Department's Central Records Unit, Herbert C. Hoover building, Room B–099.

Period of Investigation

The period of investigation is January 1, 2004, through December 31, 2004.

Scope of Investigation

The product covered by this investigation is all forms, sizes, and grades of superalloy degassed chromium from Japan. Superalloy degassed chromium is a high–purity form of chrome metal that generally contains at least 99.5 percent, but less than 99.95 percent, chromium. Superalloy degassed chromium contains very low levels of certain gaseous elements and other impurities (typically no more than 0.005 percent nitrogen, 0.005 percent sulphur, 0.05 percent oxygen, 0.01 percent aluminum, 0.05 percent silicon, and 0.35 percent iron). Superalloy degassed chromium is generally sold in briquetted form, as ''pellets'' or ''compacts,'' which typically are 1½ inches x 1 inch x 1 inch or smaller in size and have a smooth surface. Superalloy degassed chromium is currently classifiable under subheading 8112.21.00 of the Harmonized Tariff Schedule of the United States (HTSUS). This investigation covers all chromium meeting the above specifications for superalloy degassed chromium regardless of tariff classification.

Certain higher–purity and lower–purity chromium products are excluded from the scope of this investigation. Specifically, the investigation does not cover electronics–grade chromium, which contains a higher percentage of chromium (typically not less than 99.95 percent), a much lower level of iron (less than 0.05 percent), and lower levels of other impurities than superalloy degassed chromium. The investigation also does not cover ''vacuum melt grade'' (VMG) chromium, which normally contains at least 99.4 percent chromium and contains a higher level of one or more impurities (nitrogen, sulphur, oxygen, aluminum and/or silicon) than specified above for superalloy degassed chromium.

Although the HTSUS subheading is provided for convenience and customs purposes, the written description of the scope of this investigation is dispositive.

Adverse Facts Available

For the final determination, we continue to find that, by failing to provide information we requested, JFE

Material, a producer and exporter of superalloy degassed chromium from Japan and mandatory respondent in this investigation, did not act to the best of its ability. Thus, the Department continues to find that the use of adverse facts available is warranted under section 776(a)(2) of the Act. See *Preliminary Determination*, 70 FR at 48539–48540.

Final Determination of Investigation

We determine that the following weighted average dumping margins exist for the period January 1, 2004, through December 31, 2004:

Manufacturer or Exporter	Weighted–Average Margin (percent)
JFE Material Co., Ltd. ..	129.32
All Others	129.32

Continuation of Suspension of Liquidation

Pursuant to section 735(c)(1)(B) of the Act and 19 CFR 351.211(b)(1), we will instruct Customs and Border Protection (CBP) to continue to suspend liquidation of all imports of subject merchandise from Japan entered, or withdrawn from warehouse, for consumption on or after August 18, 2005, the date of the publication of our preliminary determination. CBP shall continue to require a cash deposit or the posting of a bond equal to the estimated amount by which the normal value exceeds the U.S. price as shown above. These instructions suspending liquidation will remain in effect until further notice.

International Trade Commission Notification

In accordance with section 735(d) of the Act, we have notified the International Trade Commission (ITC) of our final determination. As our final determination is affirmative and in accordance with section 735(b)(2) of the Act, the ITC will determine, within 45 days, whether the domestic industry in the United States is materially injured, or threatened with material injury, by reason of imports, or sales (or the likelihood of sales) for importation, of the subject merchandise. If the ITC determines that material injury or threat of material injury does not exist, the proceeding will be terminated and all securities posted will be refunded or canceled. If the ITC determines that such injury does exist, the Department will issue an antidumping duty order directing CBP to assess antidumping duties on all imports of the subject merchandise entered, or withdrawn from warehouse, for consumption on or after the effective date of the suspension of liquidation (*i.e.*, August 18, 2005).

Notification Regarding APO

This notice also serves as a reminder to parties subject to administrative protective order (APO) of their responsibility concerning the disposition of proprietary information disclosed under APO in accordance with 19 CFR 351.305. Timely notification of return/destruction of APO materials or conversion to judicial protective order is hereby requested. Failure to comply with the regulations and the terms of an APO is a sanctionable violation.

This determination is issued and published pursuant to sections 735(d) and 777(i)(1) of the Act.

Dated: October 25, 2005.

Stephen J. Claeys,

Acting Assistant Secretary for Import Administration.

[FR Doc. 05–21769 Filed 10–31–05; 8:45 am]

BILLING CODE 3510–DS–S

DEPARTMENT OF COMMERCE

National Oceanic and Atmospheric Administration

Proposed Information Collection; Comment Request; Alaska Individual Fishing Quota Cost Recovery Program Requirements

AGENCY: National Oceanic and Atmospheric Administration (NOAA).

ACTION: Notice.

SUMMARY: The Department of Commerce, as part of its continuing effort to reduce paperwork and respondent burden, invites the general public and other Federal agencies to take this opportunity to comment on proposed and/or continuing information collections, as required by the Paperwork Reduction Act of 1995.

DATES: Written comments must be submitted on or before January 3, 2006.

ADDRESSES: Direct all written comments to Diana Hynek, Departmental Paperwork Clearance Officer, Department of Commerce, Room 6625, 14th and Constitution Avenue, NW., Washington, DC 20230 (or via the Internet at *dHynek@doc.gov*).

FOR FURTHER INFORMATION CONTACT: Requests for additional information or copies of the information collection instrument and instructions should be directed to Patsy A. Bearden, 907–586–7008 or *patsy.bearden@noaa.gov*.

SUPPLEMENTARY INFORMATION:

I. Abstract

The Magnuson-Stevens Fishery Conservation and Management Act requires that the Secretary of Commerce conduct a Cost Recovery Program to cover the management and enforcement costs of the Alaska Individual Fishing Quota (IFQ) Program. This Cost Recovery Program requires IFQ permit holders to submit information about the value of landings of IFQ species and to calculate and submit fees. The Cost Recovery Program requires Registered Buyers to submit information about the value and volume of landings of IFQ species.

II. Method of Collection

Paper fee submission forms (mailed with payment) or report and payment online.

III. Data

OMB Number: 0648–0398.

Form Number: None.

Type of Review: Regular submission.

Affected Public: Not-for-profit institutions; and business or other for-profits organizations.

Estimated Number of Respondents: 2,700.

Estimated Time per Response: 2 hours to complete IFQ Permit Holder Fee Submission Form; 2 hours to complete IFQ Registered Buyer Ex-vessel Value and Volume Report; 2 hours to complete the appeal process; and 30 minutes for prepayment of fees.

Estimated Total Annual Burden Hours: 5,504.

Estimated Total Annual Cost to Public: $2,000.

IV. Request for Comments

Comments are invited on: (a) Whether the proposed collection of information is necessary for the proper performance of the functions of the agency, including whether the information shall have practical utility; (b) the accuracy of the agency's estimate of the burden (including hours and cost) of the proposed collection of information; (c) ways to enhance the quality, utility, and clarity of the information to be collected; and (d) ways to minimize the burden of the collection of information on respondents, including through the use of automated collection techniques or other forms of information technology.

Comments submitted in response to this notice will be summarized and/or included in the request for OMB approval of this information collection; they also will become a matter of public record.

Dated: October 26, 2005.

Gwellnar Banks,

Management Analyst, Office of the Chief Information Officer.

[FR Doc. 05–21686 Filed 10–31–05; 8:45 am]

BILLING CODE 3510–22–P

DEPARTMENT OF COMMERCE

National Oceanic and Atmospheric Administration

Proposed Information Collection; Comment Request; Coastal and Estuarine Land Conservation Planning, Protection or Restoration

AGENCY: National Oceanic and Atmospheric Administration (NOAA).

ACTION: Notice.

SUMMARY: The Department of Commerce, as part of its continuing effort to reduce paperwork and respondent burden, invites the general public and other Federal agencies to take this opportunity to comment on proposed and/or continuing information collections, as required by the Paperwork Reduction Act of 1995.

DATES: Written comments must be submitted on or before January 3, 2006.

ADDRESSES: Direct all written comments to Diana Hynek, Departmental Paperwork Clearance Officer, Department of Commerce, Room 6625, 14th and Constitution Avenue, NW., Washington, DC 20230 (or via the Internet at *dHynek@doc.gov*).

FOR FURTHER INFORMATION CONTACT: Requests for additional information or copies of the information collection instrument and instructions should be directed to Elaine Vaudreuil, 301–713–3155 ext. 103 or *Elaine.Vaudreuil@noaa.gov*.

SUPPLEMENTARY INFORMATION:

I. Abstract

The FY 2002 Commerce, Justice, State Appropriations Act directed the Secretary of Commerce to establish a Coastal and Estuarine Land Conservation Program (CELCP) to protect important coastal and estuarine areas that have significant conservation, recreation, ecological, historical, or aesthetic values, or that are threatened by conversion, and to issue guidelines for this program delineating the criteria for grant awards. The guidelines establish procedures for eligible applicants who choose to participate in the program to use when developing state conservation plans, proposing or soliciting projects under this program, applying for funds, and carrying out projects under this program in a manner that is consistent with the purposes of the program. Guidelines for the CELCP can be found on NOAA's Web site at: *http://www.ocrm.nos.noaa.gov/landconservation.html* or may be obtained upon request via the contact information listed above. NOAA also has, or is given, authority under the Coastal Zone Management Act, annual appropriations or other authorities, to issue funds to coastal states, localities or other recipients for planning, conservation, acquisition, protection, restoration, or construction projects. This information collection enables NOAA to implement the CELCP, under its current or future authorization, and facilitate the review of similar projects under different, but related, authorities.

II. Method of Collection

The Project Application Checklist, paper or electronic grant applications and performance reports, are required from participants. Other supporting information is submitted in accordance with guidance. The information can be submitted in paper or electronic format.

III. Data

OMB Number: 0648–0459.

Form Number: None.

Type of Review: Regular submission.

Affected Public: State, local, or tribal government; not-for-profit institutions.

Estimated Number of Respondents: 50.

Estimated Time per Response: 35 hours for a CELCP plan; 10 hours for a project application and checklist; and 5 hours for semi-annual and annual reporting.

Estimated Total Annual Burden Hours: 1,007.

Estimated Total Annual Cost to Public: $516.

IV. Request for Comments

Comments are invited on: (a) Whether the proposed collection of information is necessary for the proper performance of the functions of the agency, including whether the information shall have practical utility; (b) the accuracy of the agency's estimate of the burden (including hours and cost) of the proposed collection of information; (c) ways to enhance the quality, utility, and clarity of the information to be collected; and (d) ways to minimize the burden of the collection of information on respondents, including through the use of automated collection techniques or other forms of information technology.

Comments submitted in response to this notice will be summarized and/or included in the request for OMB approval of this information collection; they also will become a matter of public record.

Dated: October 26, 2005.

Gwellnar Banks,

Management Analyst, Office of the Chief Information Officer.

[FR Doc. 05–21687 Filed 10–31–05; 8:45 am]

BILLING CODE 3510–22–P

DEPARTMENT OF COMMERCE

National Oceanic and Atmospheric Administration

Proposed Information Collection; Comment Request; Alaska Seabird Avoidance Program

AGENCY: National Oceanic and Atmospheric Administration (NOAA).

ACTION: Notice.

SUMMARY: The Department of Commerce, as part of its continuing effort to reduce paperwork and respondent burden, invites the general public and other Federal agencies to take this opportunity to comment on proposed and/or continuing information collections, as required by the Paperwork Reduction Act of 1995.

DATES: Written comments must be submitted on or before January 3, 2006.

ADDRESSES: Direct all written comments to Diana Hynek, Departmental Paperwork Clearance Officer, Department of Commerce, Room 6625, 14th and Constitution Avenue, NW., Washington, DC 20230 (or via the Internet at *dHynek@doc.gov*).

FOR FURTHER INFORMATION CONTACT: Requests for additional information or copies of the information collection instrument and instructions should be directed to Patsy A. Bearden, 907–586–7008 or *patsy.bearden@noaa.gov.*

SUPPLEMENTARY INFORMATION:

I. Abstract

The National Marine Fisheries Service Alaska Region actively seeks reduction of seabird incidental take in longline (hook-and-line) fisheries off Alaska through the Seabird Avoidance Program. The primary requirements of the Seabird Avoidance Program are: (1) Seabird avoidance gear must be onboard, made available for inspection upon request by specified persons, and must be used while hook-and-line gear is being deployed; (2) Use of a line or lines designed to deter seabirds from taking baited hooks (paired streamer line, single streamer line, or buoy bag line); (3) Offal discharge methods, including removal of hooks from any offal that is discharged;

(4) Collection of all seabirds that are incidentally taken on the observer-sampled portions of hauls using hook-and-line gear; and (5) A Seabird Avoidance Plan must be written, current, and onboard the vessel, and must be made available for inspection upon request by an authorized officer of the U.S. Coast Guard or NOAA Office for Law Enforcement.

II. Method of Collection

The Seabird Avoidance Plan must be written and signed by the vessel operator and displayed onboard the vessel, in a notebook or folder. Prior to departing for a fishing trip, the owner or operator must discuss his Seabird Avoidance Plan with the crew of the vessel, instructing and training them through seabird avoidance gear drills. For observed vessels, a copy of Seabird Avoidance Plan must be given to the observer if requested and should be discussed with the observer during a pre-departure meeting.

III. Data

OMB Number: 0648–0474.

Form Number: None.

Type of Review: Regular submission.

Affected Public: Not-for-profit institutions; and business or other for-profit organizations.

Estimated Number of Respondents: 2,000.

Estimated Time per Response: 8 hours to complete a Seabird Avoidance Plan.

Estimated Total Annual Burden Hours: 16,000.

Estimated Total Annual Cost to Public: $10,000.

IV. Request for Comments

Comments are invited on: (a) Whether the proposed collection of information is necessary for the proper performance of the functions of the agency, including whether the information shall have practical utility; (b) the accuracy of the agency's estimate of the burden (including hours and cost) of the proposed collection of information; (c) ways to enhance the quality, utility, and clarity of the information to be collected; and (d) ways to minimize the burden of the collection of information on respondents, including through the use of automated collection techniques or other forms of information technology.

Comments submitted in response to this notice will be summarized and/or included in the request for OMB approval of this information collection; they also will become a matter of public record.

Dated: October 26, 2005.

Gwellnar Banks,

Management Analyst, Office of the Chief Information Officer.

[FR Doc. 05–21688 Filed 10–31–05; 8:45 am]

BILLING CODE 3510–22–P

COMMITTEE FOR THE IMPLEMENTATION OF TEXTILE AGREEMENTS

Exemption from Category 647/648 of Ski and Snowboard Pants Manufactured in the People's Republic of China

October 26, 2005.

AGENCY: Committee for the Implementation of Textile Agreements (CITA).

ACTION: Issuing a directive to the Commissioner, Customs and Border Protection, to not subject ski and snowboard pants to limits on category 647/648 and to release them from the current embargo for goods manufactured in the People's Republic of China.

EFFECTIVE DATE: November 1, 2005.

FOR FURTHER INFORMATION CONTACT: Philip J. Martello, Director, Trade and Data Division, Office of Textiles and Apparel, U.S. Department of Commerce, (202) 482-3400.

SUPPLEMENTARY INFORMATION:

Authority: Section 204 of the Agriculture Act of 1956 (7 U.S.C. 1854); Executive Order 11651, 37 Fed. Reg. 4699 (Mar. 3, 1972), as amended.

CITA has determined that certain imports of ski and snowboard pants from China do not contribute to the market disruption found in category 647/648 goods. CITA based this determination on its belief that these ski and snowboard pant imports of Chinese origin were not, due to market disruption, threatening to impede the orderly development of trade in these products. Specifically, CITA determined that ski/snowboard pants should not be covered by the 2005 safeguard quota. CITA has received new information indicating that there is minimal domestic production of the ski/snowboard pants products; the ski/snowboard pants products are seasonal products with limited end-use; the ski/snowboard pants products account for de minimis import quantities; thus, the exclusion does not undermine the market disruption finding or require the readjustment of the quota calculation; and the ski/snowboard pants products are easily definable in the HTS schedule for enforcement purposes and the specificity of the definition ensures that this provision will apply only to those items that meet the narrow parameters established in the tariff items and in the statistical note of the Harmonized Tariff Schedule of the United States (HTSUS).

The HTSUS has been modified to establish a new statistical note for ski/snowboard pants applicable to HTSUS items 6203.43.3510, 6204.63.3010, 6210.40.5031, and 6210.50.5031. Ski and snowboard pants can also be imported as parts of ski suits, classified under HTSUS items 6211.20.1525 and 6211.20.1555.

Effective on November 1, 2005, for goods produced or manufactured in the People's Republic of China, that meet the definition of ski/snowboard pants, provided below, classified in HTSUS items 6203.43.3510, 204.63.3010, 6210.40.5031, and 6210.50.5031, and trousers imported as parts of ski-suits classified under HTSUS items 6211.20.1525 and 6211.20.1555, CITA is directing the Commissioner, Customs and Border Protection, to not subject these products to restrictions established for category 647/648 in 2005 and to allow entry of such goods no longer subject to the embargo currently in effect for category 647/648 goods.

Definition:

For the purposes of subheadings 6203.43.3510, 6204.63.3010, 6210.40.5031, and 6210.50.5031:

The term ''ski/snowboard pants'' means ankle-length pants made of synthetic fabrics, with or without insulation for cold weather protection, with zippered or hook and loop enclosed pockets, sealed seams and hidden elastic leg sleeves, and with one or more of the following: side openings, scuff guards or reinforcement in the seat. A sealed seam is one that has been covered, on the backside of the fabric, with tape or a coating to ''bridge'' the seam so that air and water cannot pass through. The tape or coating may be applied using heat and/or pressure.

James C. Leonard III,

Chairman, Committee for the Implementation of Textile Agreements.

Committee for the Implementation of Textile Agreements

October 26, 2005.

Commissioner,
Bureau of Customs and Border Protection, Washington, DC 20229.

Dear Commissioner: On May 26, 2005, the Chairman of the Committee for the Implementation of Textile Agreement (CITA) issued a directive to you to establish an import limit on man-made fiber trousers (category 647/648), produced or manufactured in the People's Republic of China and exported during the period beginning on May 27, 2005 and extending

through December 31, 2005. The limit established for these products was fully utilized on August 3, 2005.

Effective on November 1, 2005, you are directed to exempt from the 2005 restraint established for category 647/648 goods manufactured in China, goods that meet the definition of ski/snowboard pants, provided below, classified in items 6203.43.3510, 6204.63.3010, 6210.40.5031, and 6210.50.5031 of the Harmonized Tariff Schedule of the United States and trousers imported as parts of ski-suits, classified in items 6211.20.1525 and 6211.20.1555. You are further directed to release from the embargo on category 647/648 and allow entry of such ski and snowboard pants, produced or manufactured in the People's Republic of China and entered for consumption or withdrawn from warehouse for consumption into the United States on and after November 1, 2005.

Definition:

For the purposes of headings 6203.43.3510, 6204.63.3010, 6210.40.5031, and 6210.50.5031:

The term ''ski/snowboard pants'' means ankle-length pants made of synthetic fabrics, with or without insulation for cold weather protection, with zippered or hook and loop enclosed pockets, sealed seams and hidden elastic leg sleeves, and with one or more of the following: side openings, scuff guards or reinforcement in the seat. A sealed seam is one that has been covered, on the backside of the fabric, with tape or a coating to ''bridge'' the seam so that air and water cannot pass through. The tape or coating may be applied using heat and/or pressure.

The Committee for the Implementation of Textile Agreements has determined that this action falls within the foreign affairs exception to the rulemaking provisions of 5 U.S.C. 553(a)(1).

Sincerely,

James C. Leonard III,

Chairman, Committee for the Implementation of Textile Agreements.

[FR Doc. 05–21689 Filed 10–27–05; 10:33 am]

BILLING CODE 3510–DS

DEFENSE NUCLEAR FACILITIES SAFETY BOARD

Senior Executive Service Performance Review Board

AGENCY: Defense Nuclear Facilities Safety Board.

ACTION: Notice.

SUMMARY: This notice announces the membership of the Defense Nuclear Facilities Safety Board (DNFSB) Senior Executive Service (SES) Performance Review Board. It also announces the DNFSB senior executives who are available to serve on the SES performance review boards of other small, independent Federal commissions, committees, and boards.

EFFECTIVE DATE: October 24, 2005.

ADDRESSES: Send comments concerning this notice to: Defense Nuclear Facilities Safety Board, 625 Indiana Avenue, NW., Suite 700, Washington, DC 20004–2001.

FOR FURTHER INFORMATION CONTACT: Deborah Biscieglia by telephone at (202) 694–7041 or by e-mail at *debbieb@dnfsb.gov.*

SUPPLEMENTARY INFORMATION: 5 U.S.C. 4314(c)(1) through (5) requires each agency to establish, in accordance with regulations prescribed by the Office of Personnel Management, one or more performance review boards. The board shall review and evaluate the initial summary rating of the senior executive's performance, the executive's response, and the higher-level official's comments on the initial summary rating. The DNFSB is a small, independent Federal agency; therefore, the members of the DNFSB SES Performance Review Board listed in this notice are drawn from the SES ranks of other agencies.

The following persons comprise a standing roster to serve as members of the Defense Nuclear Facilities Safety Board SES Performance Review Board:

Lawrence W. Roffee, Executive Director, United States Access Board

Gerald J. Smith, President, Barry M. Goldwater Scholarship & Excellence in Education Foundation

Christopher W. Warner, General Counsel, U.S. Chemical Safety and Hazard Investigation Board

Leon A. Wilson, Jr., Executive Director, Committee for Purchase from People Who Are Blind or Severely Disabled

The following DNFSB SES members comprise a standing roster to serve on the performance review boards of other small, independent Federal commissions, committees and boards:

Richard A. Azzaro, General Counsel

Timothy J. Dwyer, Deputy Technical Director

J. Kenton Fortenberry, Technical Director

Kenneth M. Pusateri, General Manager

Joel R. Schapira, Deputy General Counsel

Dated: October 24, 2005.

Kenneth M. Pusateri,

Chairman, Executive Resources Board.

[FR Doc. 05–21701 Filed 10–31–05; 8:45 am]

BILLING CODE 3670–01–P

DEPARTMENT OF EDUCATION

Submission for OMB Review; Comment Request

AGENCY: Department of Education.

SUMMARY: The Leader, Information Management Case Services Team, Regulatory Information Management Services, Office of the Chief Information Officer invites comments on the submission for OMB review as required by the Paperwork Reduction Act of 1995.

DATES: Interested persons are invited to submit comments on or before December 1, 2005.

ADDRESSES: Written comments should be addressed to the Office of Information and Regulatory Affairs, Attention: Rachel Potter, Desk Officer, Department of Education, Office of Management and Budget, 725 17th Street, NW., Room 10222, New Executive Office Building, Washington, DC 20503 or faxed to (202) 395–6974.

SUPPLEMENTARY INFORMATION: Section 3506 of the Paperwork Reduction Act of 1995 (44 U.S.C. Chapter 35) requires that the Office of Management and Budget (OMB) provide interested Federal agencies and the public an early opportunity to comment on information collection requests. OMB may amend or waive the requirement for public consultation to the extent that public participation in the approval process would defeat the purpose of the information collection, violate State or Federal law, or substantially interfere with any agency's ability to perform its statutory obligations. The Leader, Information Management Case Services Team, Regulatory Information Management Services, Office of the Chief Information Officer, publishes that notice containing proposed information collection requests prior to submission of these requests to OMB. Each proposed information collection, grouped by office, contains the following: (1) Type of review requested, *e.g.* new, revision, extension, existing or reinstatement; (2) Title; (3) Summary of the collection; (4) Description of the need for, and proposed use of, the information; (5) Respondents and frequency of collection; and (6) Reporting and/or Recordkeeping burden. OMB invites public comment.

Dated: October 26, 2005.

Angela C. Arrington,

Leader, Information Management Case Services Team, Regulatory Information Management Services, Office of the Chief Information Officer.

Office of Innovation and Improvement

Type of Review: Extension.

Title: Parental Information and Resource Center Annual and Final Performance Report.

Frequency: Annually.

Affected Public: Not-for-profit institutions.

Reporting and Recordkeeping Hour Burden: Responses: 84. Burden Hours: 504.

Abstract: Recipients of grants under the Parental Information and Resource Center program must submit an annual performance report that establishes substantial progress toward meeting their project objectives to receive a continuation award.

Requests for copies of the information collection submission for OMB review may be accessed from *http://edicsweb.ed.gov*, by selecting the ''Browse Pending Collections'' link and by clicking on link number 2869. When you access the information collection, click on ''Download Attachments '' to view. Written requests for information should be addressed to U.S. Department of Education, 400 Maryland Avenue, SW., Potomac Center, 9th Floor, Washington, DC 20202–4700. Requests may also be electronically mailed to the Internet address *OCIO_RIMG@ed.gov* or faxed to 202–245–6623. Please specify the complete title of the information collection when making your request.

Comments regarding burden and/or the collection activity requirements should be directed to Kathy Axt at her e-mail address *Kathy.Axt@ed.gov*. Individuals who use a telecommunications device for the deaf (TDD) may call the Federal Information Relay Service (FIRS) at 1–800–877–8339.

[FR Doc. 05–21737 Filed 10–31–05; 8:45 am]

BILLING CODE 4000–01–P

DEPARTMENT OF ENERGY

[OE Docket No. PP–305]

Application for Presidential Permit; Montana Alberta Tie Ltd.

AGENCY: Office of Electricity Delivery and Energy Reliability, DOE.

ACTION: Notice of application.

SUMMARY: Montana Alberta Tie Ltd. (MATL) has applied for a Presidential permit to construct, operate, maintain, and connect an electric transmission line across the U.S. border with Canada.

DATES: Comments, protests, or requests to intervene must be submitted on or before December 1, 2005.

ADDRESSES: Comments, protests, or requests to intervene should be addressed as follows: Office of Electricity Delivery and Energy Reliability (OE–20), U.S. Department of Energy, 1000 Independence Avenue, SW., Washington, DC 20585–0350.

FOR FURTHER INFORMATION CONTACT: Ellen Russell (Program Office) (202) 586–9624 or Michael T. Skinker (Program Attorney) (202) 586–2793.

SUPPLEMENTARY INFORMATION: The construction, operation, maintenance, and connection of facilities at the international border of the United States for the transmission of electric energy between the United States and a foreign country is prohibited in the absence of a Presidential permit issued pursuant to Executive Order (EO) 10485, as amended by EO 12038.

On October 7, 2005, MATL, a Canadian corporation, filed an application with the Office of Electricity Delivery and Energy Reliability (OE) of the Department of Energy (DOE) for a Presidential permit. MATL proposes to construct a single-circuit 230-kilovolt (230-kV) electric transmission line across the U.S.-Canada international border.

The MATL transmission line project would connect the Alberta Interconnected Electrical System and NorthWestern Energy's (NWE) transmission system. NWE is a U.S. investor-owned utility serving electric customers in Montana, South Dakota and Nebraska. The proposed international transmission line would originate at a new substation to be constructed northeast of Lethbridge, Alberta, Canada, cross the U.S.-Canada international border directly north of Cut Bank, Montana (west of Sweetgrass, Montana) and extend approximately 125 miles into the U.S., terminating at an existing 230-kV substation owned by NWE north of Great Falls, Montana. Between the U.S.-Canada border and Great Falls, the transmission line would also connect to an existing substation owned by Glacier Electric Cooperatives in Cut Bank, Montana. A phase shifting transformer would be installed at the substation in Lethbridge, Alberta, to control power flows between the two regions.

MATL has indicated its intention to operate the proposed facilities as a merchant transmission line and make it available for third-party use. MATL has not applied to DOE under section 202(e) of the Federal Power Act (FPA) (16 U.S.C. 824a(e)) for authorization to export electric energy over the proposed facilities. If DOE were to grant the requested Presidential permit and MATL were to subsequently construct the proposed international transmission line, any person wishing to export electric energy to Canada utilizing those facilities would need to obtain export authority from DOE under section 202(e) of the FPA.

Procedural Matters

Any person desiring to become a party to this proceeding or to be heard by filing comments or protests to this application should file a petition to intervene, comment or protest at the address provided above in accordance with §§ 385.211 or 385.214 of the FERC's Rules of Practice and Procedures (18 CFR 385.211, 385.214). Fifteen copies of each petition and protest should be filed with the DOE on or before the date listed above.

Additional copies of such petitions to intervene or protests also should be filed directly with: Mr. Bob Williams, Vice President Regulatory, Montana Alberta Tie Ltd., Rocky Mountain Plaza, Suite 800, 615 Macleod Trail SE., Calgary, Alberta, Canada AND Richard P. Sparling, Alston & Bird LLP, 601 Pennsylvania Avenue NW., North Building, 10th Floor, Washington, DC 20004–2601.

Before a Presidential permit may be issued or amended, the DOE must determine that the proposed action will not adversely impact on the reliability of the U.S. electric power supply system. In addition, DOE must consider the environmental impacts of the proposed action (i.e., granting the Presidential permit, with any conditions and limitations, or denying the permit) pursuant to the National Environmental Policy Act (NEPA). DOE also must obtain the concurrence of the Secretary of State and the Secretary of Defense before taking final action on a Presidential permit application.

Copies of this application will be made available, upon request, for public inspection and copying at the address provided above. In addition, the application may be reviewed or downloaded electronically at *http://www.fe.doe.gov/programs/electricityregulation/*. Upon reaching the home page, select ''Pending Proceedings.''

Dated: Issued in Washington, DC, on October 26, 2005.

Anthony J. Como,

Director, Siting and Permitting, Office of Electricity Delivery and Energy Reliability.

[FR Doc. 05–21741 Filed 10–31–05; 8:45 am]

BILLING CODE 6450–01–P

ENVIRONMENTAL PROTECTION AGENCY

[OECA–2005–0046; FRL–7991–5]

Agency Information Collection Activities; Submission for OMB Review and Approval; Comment Request; NESHAP for Primary Lead Smelters (Renewal); OMB Number 2060–0414; EPA ICR Number 1856.05

AGENCY: Environmental Protection Agency (EPA).

ACTION: Notice.

SUMMARY: In compliance with the Paperwork Reduction Act, this document announces that an Information Collection Request (ICR) has been forwarded to the Office of Management and Budget (OMB) for review and approval. This is a request to renew an existing approved collection. This ICR is scheduled to expire on October 31, 2005. Under OMB regulations, the Agency may continue to conduct or sponsor the collection of information while this submission is pending at OMB. This ICR describes the nature of the information collection and its estimated burden and cost.

DATES: Additional comments may be submitted on or before December 1, 2005.

ADDRESSES: Submit your comments, referencing docket ID number OECA–2005–0046, to (1) EPA online using EDOCKET (our preferred method), by e-mail to *docket.oeca@epa.gov,* or by mail to: Environmental Protection Agency, EPA Docket Center (EPA/DC), Enforcement and Compliance Docket and Information Center, Mail Code 2201T, 1200 Pennsylvania Avenue, NW., Washington, DC 20460, and (2) OMB at: Office of Information and Regulatory Affairs, Office of Management and Budget (OMB), Attention: Desk Officer for EPA, 725 17th Street, NW., Washington, DC 20503.

FOR FURTHER INFORMATION CONTACT: María Malavé, Compliance Assessment and Media Programs Division (Mail Code 2223A), Office of Compliance, Environmental Protection Agency, 1200 Pennsylvania Avenue, NW., Washington, DC 20460; telephone number: (202) 564–7027; fax number: (202) 564–0050; e-mail address: *malave.maria@epa.gov.*

SUPPLEMENTARY INFORMATION: EPA has submitted the following ICR to OMB for review and approval according to the procedures prescribed in 5 CFR 1320.12. On May 6, 2005 (70 *FR* 24020), EPA sought comments on this ICR pursuant to 5 CFR 1320.8(d). EPA received no comments.

EPA has established a public docket for this ICR under Docket ID Number OECA–2005 0046, which is available for public viewing at the Enforcement and Compliance Docket and Information Center in the EPA Docket Center (EPA/DC), EPA West, Room B102, 1301 Constitution Avenue, NW., Washington, DC. The EPA Docket Center Public Reading Room is open from 8:30 a.m. to 4:30 p.m., Monday through Friday, excluding legal holidays. The telephone number for the Reading Room is (202) 566–1744, and the telephone number for the Enforcement and Compliance Docket and Information Center Docket is: (202) 566–1752. An electronic version of the public docket is available through EPA Dockets (EDOCKET) at *http://www.epa.gov/edocket.* Use EDOCKET to submit or view public comments, access the index listing of the contents of the public docket, and to access those documents in the public docket that are available electronically. When in the system, select ''search,'' then key in the docket ID number identified above.

Any comments related to this ICR should be submitted to EPA and OMB within 30 days of this notice. EPA's policy is that public comments, whether submitted electronically or in paper, will be made available for public viewing in EDOCKET as EPA receives them and without change, unless the comment contains copyrighted material, Confidential Business Information (CBI), or other information whose public disclosure is restricted by statute. When EPA identifies a comment containing copyrighted material, EPA will provide a reference to that material in the version of the comment that is placed in EDOCKET. The entire printed comment, including the copyrighted material, will be available in the public docket. Although identified as an item in the official docket, information claimed as CBI, or whose disclosure is otherwise restricted by statute, is not included in the official public docket, and will not be available for public viewing in EDOCKET. For further information about the electronic docket, see EPA's **Federal Register** notice describing the electronic docket at 67 *FR* 38102 (May 31, 2002), or go to *www.epa.gov/edocket.*

Title: NESHAP for Primary Lead Smelters (Renewal).

Abstract: The National Emission Standards for Hazardous Air Pollutants (NESHAP) for Primary Lead Smelters, published at 40 CFR part 63, subpart TTT, were proposed on April 17, 1998 (63 *FR* 19200), and promulgated on June 4, 1999 (64 *FR* 30204). On February 12, 1999, the Agency publicized a supplemental rulemaking for ferroalloys, mineral wool, primary copper, primary lead and wool fiberglass. The supplemental for this rule enhances the requirements of the bag leak detection systems in 40 CFR 63.1625 and 40 CFR 63.1655 of the proposed rule to include an enforceable operating limit. This rule applies to emissions sources (i.e., sinter machine, blast furnace, dross furnace, process fugitive, and fugitive dust sources) from primary lead smelters.

The monitoring, recordkeeping, and reporting requirements outlined in the rule are similar to those required for other NESHAP regulations. Plants must demonstrate compliance with the emission standards by monitoring their control devices and performing annual emissions testing. Consistent with the NESHAP General Provisions (40 CFR part 63, subpart A), all sources subject to this standard are required to submit one-time notifications of applicability; a one-time report on performance test results for the primary emission control device; an initial report specifying the intended methods of compliance; standard operating procedure manuals for baghouses and fugitive dust control; and a semiannual report that includes a summary of the monitoring results, any baghouse leak detection system alarms and corrective actions. Sources must also maintain records of production for unrefined lead, copper matte, and copper speiss; the date and times of bag leak detection system alarms and the corrective action taken; baghouse inspection and maintenance; any records required as part of the source standard operating procedures manuals; and the compliance methods chosen. Records shall be maintained for a period of five years. Records of the most recent two years of operation must be maintained onsite.

An agency may not conduct or sponsor, and a person is not required to respond to, a collection of information unless it displays a currently valid OMB Control Number. The OMB Control Numbers for EPA's regulations are listed in 40 CFR part 9 and 48 CFR chapter 15, and are identified on the form and/or instrument, if applicable.

Burden Statement: The annual public reporting and recordkeeping burden for this collection of information is estimated to average 3,048 (rounded) hours per response. Burden means the total time, effort, or financial resources expended by persons to generate, maintain, retain, or disclose or provide information to or for a Federal agency. This includes the time needed to review

instructions; develop, acquire, install, and utilize technology and systems for the purposes of collecting, validating, and verifying information, processing and maintaining information, and disclosing and providing information; adjust the existing ways to comply with any previously applicable instructions and requirements; train personnel to be able to respond to a collection of information; search data sources; complete and review the collection of information; and transmit or otherwise disclose the information.

Respondents/Affected Entities: Emissions sources from primary lead smelters (i.e., sinter machine, blast furnace, dross furnace, process fugitive, and fugitive dust sources).

Estimated Number of Respondents: 2.

Frequency of Response: Initial, annual, semiannual and on occasion.

Estimated Total Annual Hour Burden: 12,190 hours.

Estimated Total Annual Costs: $1,003,083, which includes $0 annualized capital/startup costs, $19,000 annual O&M costs, and $984,083 annual labor costs.

Changes in the Estimates: There is a decrease of 83 hours in the total estimated burden currently identified in the OMB Inventory of Approved ICR Burdens. This decrease in labor burden to industry from the most recently approved ICR is due to the assumptions that both existing respondents have complied with the initial requirements of the rule and that there will be no new growth in this industry sector.

The total annualized capital and operations and maintenance costs decreased from $36,000 to $19,000 due to a lack of capital/startup costs associated with new sources purchasing continuous emission monitoring equipment. The operation and maintenance costs for the monitoring equipment at existing sources are anticipated to continue over the next three years.

Although there was an increase in the labor rates for both industry and the Federal government, it did not offset the reduction in labor burden associated due to the assumptions stated above.

Dated: October 24, 2005.

Oscar Morales,

Director, Collection Strategies Division.

[FR Doc. 05–21759 Filed 10–31–05; 8:45 am]

BILLING CODE 6560–50–P

ENVIRONMENTAL PROTECTION AGENCY

[OECA–2005–0024; FRL–7991–7]

Agency Information Collection Activities; Submission for OMB Review and Approval; Comment Request; NSPS for Calciners and Dryers in Mineral Industries (Renewal), ICR Number 0746.06, OMB Number 2060–0251

AGENCY: Environmental Protection Agency (EPA).

ACTION: Notice.

SUMMARY: In compliance with the Paperwork Reduction Act, this document announces that an Information Collection Request (ICR) has been forwarded to the Office of Management and Budget (OMB) for review and approval. This is a request to renew an existing approved collection. This ICR is scheduled to expire on December 31, 2005. Under OMB regulations, the Agency may continue to conduct or sponsor the collection of information while this submission is pending at OMB. This ICR describes the nature of the information collection and its estimated burden and cost.

DATES: Additional comments may be submitted on or before December 1, 2005.

ADDRESSES: Submit your comments, referencing docket ID number OECA–2005–0024, to (1) EPA online using EDOCKET (our preferred method), by e-mail to *docket.oeca@epa.gov*, or by mail to: Environmental Protection Agency, EPA Docket Center (EPA/DC), Enforcement and Compliance Docket and Information Center, Mail Code 2201T, 1200 Pennsylvania Avenue, NW., Washington, DC 20460, and (2) OMB at: Office of Information and Regulatory Affairs, Office of Management and Budget (OMB), Attention: Desk Officer for EPA, 725 17th Street, NW., Washington, DC 20503.

FOR FURTHER INFORMATION CONTACT: Learia Williams, Compliance Assessment and Media Programs Division, Office of Compliance, (Mail Code 2223A), Environmental Protection Agency, 1200 Pennsylvania Avenue, NW., Washington, DC 20460; telephone number: (202) 564–4113; fax number: (202) 564–0050; e-mail address: *williams.learia@epa.gov*.

SUPPLEMENTARY INFORMATION: EPA has submitted the following ICR to OMB for review and approval according to the procedures prescribed in 5 CFR 1320.12. On May 6, 2005 (70 FR 24020), EPA sought comments on this ICR pursuant to 5 CFR 1320.8(d). EPA received no comments.

EPA has established a public docket for this ICR under Docket ID No. OECA–2005–0024, which is available for public viewing at the Enforcement and Compliance Docket and Information Center in the EPA Docket Center (EPA/DC), EPA West, Room B102, 1301 Constitution Avenue, NW., Washington, DC. The EPA Docket Center Public Reading Room is open from 8:30 a.m. to 4:30 p.m., Monday through Friday, excluding legal holidays. The telephone number for the Reading Room is (202) 566–1744, and the telephone number for the Enforcement and Compliance Docket and Information Center Docket is: (202) 566–1752. An electronic version of the public docket is available through EPA Dockets (EDOCKET) at *http://www.epa.gov/edocket*. Use EDOCKET to submit or view public comments, access the index listing of the contents of the public docket, and to access those documents in the public docket that are available electronically. When in the system, select ''search,'' then key in the docket ID number identified above.

Any comments related to this ICR should be submitted to EPA and OMB within 30 days of this notice. EPA's policy is that public comments, whether submitted electronically or in paper, will be made available for public viewing in EDOCKET as EPA receives them and without change, unless the comment contains copyrighted material, Confidential Business Information (CBI), or other information whose public disclosure is restricted by statute. When EPA identifies a comment containing copyrighted material, EPA will provide a reference to that material in the version of the comment that is placed in EDOCKET. The entire printed comment, including the copyrighted material, will be available in the public docket. Although identified as an item in the official docket, information claimed as CBI, or whose disclosure is otherwise restricted by statute, is not included in the official public docket, and will not be available for public viewing in EDOCKET. For further information about the electronic docket, see EPA's **Federal Register** notice describing the electronic docket at 67 *FR* 38102 (May 31, 2002), or go to *www.epa.gov/edocket*.

Title: NSPS for Calciners and Dryers in Mineral Industries (40 CFR part 60, subpart UUU) (Renewal).

Abstract: The New Source Performance Standards (NSPS) for calciners and dryers in mineral

industries, were proposed on April 23, 1986, and promulgated on September 28, 1992. These standards apply to new, modified and reconstructed calciners and dryers at mineral processing plants that process or produce any of the following minerals and their concentrates or any mixture of which the majority is any of the following minerals or a combination of these minerals: alumina, ball clay, bentonite, diatomite, feldspar, fire clay, fuller's earth, gypsum, industrial sand, kaolin, lightweight aggregate, magnesium compounds, perlite, roofing granules, talc, titanium dioxide, and vermiculite.

Owners or operators of the affected facilities must make one-time-only reports including notification of startup, initial performance test, notification of any physical or operational change to an existing facility, and notification of the demonstration of the continuous monitoring system (CMS). Owners or operators are also required to maintain records of the occurrence and duration of any startup, shut down, or malfunction, or any period during which the monitoring system is inoperative. Performance tests are needed as these are the Agency's records of a source's initial capability to comply with emissions standards and note the operating conditions under which compliance was achieved. Semiannual reports of excess emissions are also required.

Any owner or operator subject to the provisions of this part must maintain a file of these measurements, and retain the file for at least two years following the collection of such measurements, maintenance reports, and records. All reports are sent to the delegated state or local authority. In the event that there is no such delegated authority, the reports are sent directly to the EPA regional office.

An agency may not conduct or sponsor, and a person is not required to respond to, a collection of information unless it displays a currently valid OMB Control Number. The OMB Control Numbers for EPA's regulations are listed in 40 CFR Part 9 and 48 CFR Chapter 15, and are identified on the form and/or instrument, if applicable.

Burden Statement: The annual public reporting and recordkeeping burden for this collection of information is estimated to average 20 hours per response. Burden means the total time, effort, or financial resources expended by persons to generate, maintain, retain, disclose or provide information to or for a Federal agency. This includes the time needed to review instructions; develop, acquire, install, and utilize technology and systems for the purposes of collecting, validating, and verifying information, processing and maintaining information, and disclosing and providing information; adjust the existing ways to comply with any previously applicable instructions and requirements; train personnel to be able to respond to a collection of information; search data sources; complete and review the collection of information; and transmit or otherwise disclose the information.

Respondents/Affected Entities: Owner or operator of each calciner and dryer at a mineral processing plant.

Estimated Number of Respondents: 167.

Frequency of Response: Semiannual, initially and on occasion.

Estimated Total Annual Hour Burden: 6,955 hours.

Estimated Total Annual Costs: $674,035, which includes $108,550 annualized capital/startup costs, $4,000 annual O&M costs, and $561,485 annual labor costs.

Changes in the Estimates: The increase in the burden from the most recently approved ICR is due to the fact that there is an increase of one source per year. In addition, we are presently accounting for management and clerical person hours per year, which was not shown in the previous ICR, and we have updated the salary table.

There is however, a decline in the annualized cost. The reason for the decline is because there is only one new source in the renewal ICR instead of two as in the previous ICR.

Dated: October 24, 2005.

Oscar Morales,

Director, Collection Strategies Division.

[FR Doc. 05–21760 Filed 10–31–05; 8:45 am]

BILLING CODE 6560–50–P

ENVIRONMENTAL PROTECTION AGENCY

[OAR–2003–0052; FRL–7991–6]

Agency Information Collection Activities; Submission to OMB for Review and Approval; Comment Request; Risk Management Program Requirements and Petitions To Modify the List of Regulated Substances under Section 112(r) of the Clean Air Act (Renewal), EPA ICR Number 1656.12, OMB Control Number 2050–0144

AGENCY: Environmental Protection Agency.

ACTION: Notice.

SUMMARY: In compliance with the Paperwork Reduction Act (44 U.S.C. 3501 *et seq.*), this document announces that an Information Collection Request (ICR) has been forwarded to the Office of Management and Budget (OMB) for review and approval. This is a request to renew an existing approved collection. This ICR is scheduled to expire on October 31, 2005. Under OMB regulations, the Agency may continue to conduct or sponsor the collection of information while this submission is pending at OMB. This ICR describes the nature of the information collection and its estimated burden and cost.

DATES: Additional comments may be submitted on or before December 1, 2005.

ADDRESSES: Submit your comments, referencing docket ID number OAR–2003–0052, to (1) EPA online using EDOCKET (our preferred method), by e-mail to *a-and-r-Docket@epa.gov,* or by mail to: EPA Docket Center, Environmental Protection Agency, Mail Code 6102T, Air Docket, 1200 Pennsylvania Ave., NW., Washington, DC 20460, and (2) OMB at: Office of Information and Regulatory Affairs, Office of Management and Budget (OMB), Attention: Desk Officer for EPA, 725 17th Street, NW., Washington, DC 20503.

FOR FURTHER INFORMATION CONTACT: Sicy Jacob, 5104A, Office of Solid Waste and Emergency Response, Office of Emergency Management, Environmental Protection Agency, 1200 Pennsylvania Ave., NW., Washington, DC 20460; telephone number: (202) 564–8019; fax number: (202) 564–2625; e-mail address: *jacob.sicy@epa.gov.*

SUPPLEMENTARY INFORMATION: EPA has submitted the following ICR to OMB for review and approval according to the procedures prescribed in 5 CFR 1320.12. On June 2, 2005 (70 FR 32325), EPA sought comments on this ICR pursuant to 5 CFR 1320.8(d). EPA received only one comment. The Agency's response is included in the supporting statement.

EPA has established a public docket for this ICR under Docket ID No. OAR–2003–0052, which is available for public viewing at the Air and Radiation Docket and Information Center in the EPA Docket Center (EPA/DC), EPA West, Room B102, 1301 Constitution Ave., NW., Washington, DC. The EPA Docket Center Public Reading Room is open from 8:30 a.m. to 4:30 p.m., Monday through Friday, excluding legal holidays. The telephone number for the Reading Room is (202) 566–1744, and the telephone number for the Air and Radiation Docket and Information Center is (202) 566–1742. An electronic version of the public docket is available

through EPA Dockets (EDOCKET) at *http://www.epa.gov/edocket.* Use EDOCKET to submit or view public comments, access the index listing of the contents of the public docket, and to access those documents in the public docket that are available electronically. Once in the system, select ''search,'' then key in the docket ID number identified above.

Any comments related to this ICR should be submitted to EPA and OMB within 30 days of this notice. EPA's policy is that public comments, whether submitted electronically or in paper, will be made available for public viewing in EDOCKET as EPA receives them and without change, unless the comment contains copyrighted material, CBI, or other information whose public disclosure is restricted by statute. When EPA identifies a comment containing copyrighted material, EPA will provide a reference to that material in the version of the comment that is placed in EDOCKET. The entire printed comment, including the copyrighted material, will be available in the public docket. Although identified as an item in the official docket, information claimed as CBI, or whose disclosure is otherwise restricted by statute, is not included in the official public docket, and will not be available for public viewing in EDOCKET. For further information about the electronic docket, see EPA's **Federal Register** notice describing the electronic docket at 67 FR 38102 (May 31, 2002), or go to *www.epa.gov/edocket.*

Title: Risk Management Program Requirements and Petitions to Modify the List of Regulated Substances under Section 112(r) of the Clean Air Act (Renewal).

Abstract: The 1990 CAA Amendments added section 112(r) to provide for the prevention and mitigation of accidental releases. Section 112(r) mandates that EPA promulgate a list of ''regulated substances,'' with threshold quantities and establish procedures for the addition and deletion of substances from the list of ''regulated substances.'' Processes at stationary sources that contain a threshold quantity of a regulated substance are subject to accidental release prevention regulations promulgated under CAA section 112(r)(7). These two rules are codified as 40 CFR part 68. Part 68 requires that sources with more than a threshold quantity of a regulated substance in a process develop and implement a risk management program and submit a risk management plan (RMP) to EPA. The compliance schedule for the part 68 requirements was established by rule on June 20, 1996. Burden to sources that are currently covered by part 68, for initial rule compliance, including rule familiarization and program implementation were accounted for in ICR 1656.03. Sources submitted their first RMPs on June 21, 1999. The next compliance deadline was June 21, 2004, five years after the first submission. Some of the sources revised and submitted their RMPs between the mandatory deadlines. These sources were then assigned a five-year compliance deadline based on the date of their revised plan submission. The next submission of RMPs for all sources is by June 21, 2009. The period covered by this ICR is between the two mandatory deadlines (2004 and 2009). Therefore, in this ICR, EPA has accounted for only on-going program implementation costs for all sources that are currently covered by part 68 requirements, compliance costs for new sources that may become subject to the regulations, and burden for sources that re-submit RMPs before the next compliance deadline.

An agency may not conduct or sponsor, and a person is not required to respond to, a collection of information unless it displays a currently valid OMB control number. The OMB control numbers for EPA's regulations in 40 CFR are listed in 40 CFR part 9 and are identified on the form and/or instrument, if applicable.

Burden Statement: The public reporting burden will depend on the regulatory program tier into which sources are categorized. In this ICR, the public reporting burden for rule familiarization for new sources is estimated to range from 20 to 40 hours per source. The public reporting burden to prepare and submit a RMP for new sources is estimated to range from 10 to 30 hours. The public reporting burden for new sources to develop prevention programs is estimated to range from 70 to 95 hours per source. The public reporting burden for CBI claims is estimated to be 9.5 hours per source. Burden for RMP revisions is estimated to range from 10 to 40 hours per source. The public record keeping burden to maintain on-site documentation for currently covered sources is estimated to range from 3 hours to 146 hours. The total annual public reporting burden for new sources to become familiar with the rule, develop and submit a RMP, develop prevention program, substantiate claims for confidential business information, submit revised RMPs, and develop on-site documentation for existing sources is about 92,442 hours (277,326 hours over three years). The total annual burden estimated for 15 states that may be implementing a Part 68 program is 6,157 hours (18,471 hours for three years). Therefore, the total annual burden for all sources and states is estimated to be 98,599 hours (295,797 hours for three years).

Burden means the total time, effort, or financial resources expended by persons to generate, maintain, retain, or disclose or provide information to or for a Federal agency. This includes the time needed to review instructions; develop, acquire, install, and utilize technology and systems for the purposes of collecting, validating, and verifying information, processing and maintaining information, and disclosing and providing information; adjust the existing ways to comply with any previously applicable instructions and requirements; train personnel to be able to respond to a collection of information; search data sources; complete and review the collection of information; and transmit or otherwise disclose the information.

Respondents/Affected Entities: Chemical manufacturers, petroleum refineries, water treatment systems, non-chemical manufacturers, etc.

Estimated Number of Respondents: 1,397, including state implementing agencies.

Frequency of Response: Every five years, unless the facilities need to update their previous submission.

Estimated Total Annual Hour Burden: 98,599 hours.

Estimated Total Annual Cost: $3,582,614, which includes $0 annualized capital, $6,910 O&M costs, and $3,575,704 Respondent Labor costs.

Changes in the Estimates: There is a decrease of 32,204 hours in the total estimated burden currently identified in the OMB Inventory of Approved ICR Burdens. This decrease is mainly due to the RMP submission schedule. The last submission of RMPs by all sources was in June 2004. The next compliance deadline is June 2009, which is after this ICR period. This ICR only accounts for compliance burden for new sources that may become subject to the regulations, any revised RMP that may be submitted by existing sources, and on-site documentation for existing sources. The burden may increase in the next ICR renewal since the next deadline for all sources to submit RMPs will fall within the next ICR period.

Dated: October 24, 2005.

Oscar Morales,

Director, Collection Strategies Division.

[FR Doc. 05–21761 Filed 10–31–05; 8:45 am]

BILLING CODE 6560–50–P

ENVIRONMENTAL PROTECTION AGENCY

[OECA–2005–0040; FRL–7991–4]

Agency Information Collection Activities; Submission for OMB Review and Approval; Comment Request; NESHAP for Portland Cement (Renewal), ICR Number 1801.04, OMB Number 2060–0416

AGENCY: Environmental Protection Agency (EPA).

ACTION: Notice.

SUMMARY: In compliance with the Paperwork Reduction Act, this document announces that an Information Collection Request (ICR) has been forwarded to the Office of Management and Budget (OMB) for review and approval. This is a request to renew an existing approved collection. This ICR is scheduled to expire on October 31, 2005. Under OMB regulations, the Agency may continue to conduct or sponsor the collection of information while this submission is pending at OMB. This ICR describes the nature of the information collection and its estimated burden and cost.

DATES: Additional comments may be submitted on or before December 1, 2005.

ADDRESSES: Submit your comments, referencing docket ID number OECA–2005–0040, to (1) EPA online using EDOCKET (our preferred method), by e-mail to *docket.oeca@epa.gov*, or by mail to: Environmental Protection Agency, EPA Docket Center (EPA/DC), Enforcement and Compliance Docket and Information Center (EPA/DC) EPA West, Mail Code 2201T, 1200 Pennsylvania Avenue, NW., Washington, DC 20460, and (2) OMB at: Office of Information and Regulatory Affairs, Office of Management and Budget (OMB), Attention: Desk Officer for EPA, 725 17th Street, NW., Washington, DC 20503.

FOR FURTHER INFORMATION CONTACT: Leonard Lazarus, Compliance Assessment and Media Programs Division (CAMPD), Office of Compliance, Mail Code: 2223A, Environmental Protection Agency, 1200 Pennsylvania Avenue, NW., Washington, DC 20460; telephone number: (202) 564–6369; fax number: (202) 564–0050; e-mail address: *lazarus.leonard@epa.gov*.

SUPPLEMENTARY INFORMATION: EPA has submitted the following ICR to OMB for review and approval according to the procedures prescribed in 5 CFR 1320.12. On May 6, 2005 (70 FR 24020), EPA sought comments on this ICR pursuant to 5 CFR 1320.8(d). EPA received no comments.

EPA has established a public docket for this ICR under Docket ID Number OECA–2005–0040, which is available for public viewing at the Enforcement and Compliance Docket and Information Center in the EPA Docket Center, (EPA/DC) EPA West, Room B102, 1301 Constitution Avenue, NW., Washington, DC. The EPA Docket Center Public Reading Room is open from 8:30 a.m. to 4:30 p.m., Monday through Friday, excluding legal holidays. The telephone number for the Reading Room is (202) 566–1744, and the telephone number for the Enforcement and Compliance Docket and Information Center Docket is: (202) 566–1752. An electronic version of the public docket is available through EPA Dockets (EDOCKET) at *http://www.epa.gov/edocket*. Use EDOCKET to submit or to view public comments, to access the index listing of the contents of the public docket, and to access those documents in the public docket that are available electronically. When in the system, select ''search,'' then key in the docket ID number identified above.

Any comments related to this ICR should be submitted to EPA and OMB within 30 days of this notice. EPA's policy is that public comments, whether submitted electronically or in paper, will be made available for public viewing in EDOCKET as EPA receives them and without change, unless the comment contains copyrighted material, confidential business information (CBI), or other information whose public disclosure is restricted by statute. When EPA identifies a comment containing copyrighted material, EPA will provide a reference to that material in the version of the comment that is placed in EDOCKET. The entire printed comment, including the copyrighted material, will be available in the public docket. Although identified as an item in the official docket, information claimed as CBI, or whose disclosure is otherwise restricted by statute, is not included in the official public docket, and will not be available for public viewing in EDOCKET. For further information about the electronic docket, see EPA's **Federal Register** notice describing the electronic docket at 67 FR 38102 (May 31, 2002), or go to *www.epa.gov/edocket*.

Title: NESHAP for Portland Cement (Renewal).

Abstract: Respondents are owners or operators of portland cement manufacturing plants. The rule applies to each new, existing or reconstructed kiln, in-line kiln/raw mill and greenfield raw material dryer at these facilities, except for kilns and in-line kiln/raw mills that burn hazardous waste. In addition, the rule applies to each new, existing or reconstructed clinker cooler; raw mill; finish mill; raw material, clinker or finished product storage bin; conveying system transfer point; bagging system and bulk loading and unloading system at facilities that are major sources; and to each existing, reconstructed or new brownfield raw material dryer at facilities that are major sources.

Respondents shall submit notifications (where applicable) and reports of initial and repeat performance test results. Plants must develop and implement a startup, shutdown, and malfunction plan and submit semiannual reports of any event where the plan was not followed. Plants must develop and implement an operations and maintenance plan and conduct and report the results of an annual combustion system inspection. Semiannual reports for periods of operation during which the monitoring parameters are exceeded (or reports certifying that no exceedances have occurred) also are required.

Subpart LLL requires respondents to install (where feasible) continuous opacity monitors and temperature monitoring systems on kilns and in-line kiln raw mills, and total hydrocarbon (THC) continuous emission monitors (CEMs) on new greenfield kilns, in-line kiln/raw mills and raw material dryers. Owners and operators are also subject to a deferred requirement to install particulate matter (PM) CEMS.

General requirements applicable to all National Emission Standards for Hazardous Air Pollutants (NESHAP) require records of applicability determinations; test results; exceedances; periods of startups, shutdowns, or malfunctions; monitoring records; and all other information needed to determine compliance with the applicable standard. Records and reports must be retained for a total of 5 years (2 years at the site; the remaining 3 years of records may be retained off site). The files may be maintained on microfilm, on computer or floppy disks, on magnetic tape disks, or on microfiche. All reports are sent to the delegated state or local authority. In the event that there is no such delegated authority, the reports are sent directly to the EPA regional office. This information is being collected to assure compliance with 40 CFR part 63, subpart LLL as authorized in sections 112 and 114(a) of the Clean Air Act. The required information consists of emissions data and other information

that have been determined not to be private.

An agency may not conduct or sponsor, and a person is not required to respond to, a collection of information unless it displays a currently valid OMB Control Number. The OMB Control Numbers for EPA's regulations are listed in 40 CFR part 9 and 48 CFR chapter 15, and are identified on the form and/or instrument, if applicable.

Burden Statement: The annual public reporting and recordkeeping burden for this collection of information is estimated to average 42 hours per response. Burden means the total time, effort, or financial resources expended by persons to generate, maintain, retain, or disclose or provide information to or for a Federal agency. This includes the time needed to review instructions; to develop, acquire, install, and utilize technology and systems for the purposes of collecting, validating, and verifying information, processing and maintaining information, and disclosing and providing information; to adjust the existing ways to comply with any previously applicable instructions and requirements; to train personnel to be able to respond to a collection of information; to search data sources; to complete and review the collection of information; and to transmit or otherwise disclose the information.

Respondents/Affected Entities: Portland cement manufacturing facilities.

Estimated Number of Respondents: 107.

Frequency of Response: Initial, Semiannually, On Occasion, Initially.

Estimated Total Annual Hour Burden: 17,526 hours.

Estimated Total Annual Costs: $2,205,272, which includes $0 annualized capital/startup costs, $791,800 annual O&M costs, and $1,413,472 annual labor costs.

Changes in the Estimates: There is a decrease of 35,655 hours in the total estimated burden currently identified in the OMB Inventory of Approved ICR Burdens. This decrease is due to a correction to the tables, which did not properly account for all reporting requirements incurred by existing facilities.

Dated: October 24, 2005.

Oscar Morales,

Director, Collection Strategies Division.

[FR Doc. 05–21762 Filed 10–31–05; 8:45 am]

BILLING CODE 6560–50–P

ENVIRONMENTAL PROTECTION AGENCY

[OAR–2005–0118, FRL–7991–3]

Agency Information Collection Activities; Submission to OMB for Review and Approval; Air Pollution Regulations for Outer Continental Shelf Activities (Renewal); EPA ICR Number 1601.06, OMB Control Number 2060–0249

AGENCY: Environmental Protection Agency.

ACTION: Notice.

SUMMARY: In compliance with the Paperwork Reduction Act (44 U.S.C. 3501 *et seq.*), this document announces that an Information Collection Request (ICR) has been forwarded to the Office of Management and Budget (OMB) for review and approval. This is a request to renew an existing approved collection. This ICR is scheduled to expire on October 31, 2005. Under OMB regulations, the Agency may continue to conduct or sponsor the collection of information while this submission is pending at OMB. This ICR describes the nature of the information collection and its estimated burden and cost.

DATES: Additional comments may be submitted on or before December 1, 2005.

ADDRESSES: Submit your comments, referencing docket ID number OAR–2005–0118, to (1) EPA online using EDOCKET (our preferred method), by e-mail to *a-and-r-Docket@epa.gov,* to: Environmental Protection Agency, EPA Docket Center (EPA/DC), Air and Radiation Docket and Information Center, 6102T, 1200 Pennsylvania Avenue, NW., Washington, DC 20460, and (2) OMB at: Office of Information and Regulatory Affairs, Office of Management and Budget (OMB), Attention: Desk Officer for EPA, 725 17th Street, NW., Washington, DC 20503.

FOR FURTHER INFORMATION CONTACT: David Sanders, Office of Air Quality Planning and Standards, Mail Drop 539–02, Environmental Protection Agency, Research Triangle Park, North Carolina 27711; telephone number: (919) 541–3356; fax number: (919) 541–0824; e-mail address: *sanders.dave@epa.gov.*

SUPPLEMENTARY INFORMATION: EPA has submitted the following ICR to OMB for review and approval according to the procedures prescribed in 5 CFR 1320.12. On May 20, 2005 (70 *FR* 29305), EPA sought comments on this ICR pursuant to 5 CFR 1320.8(d). EPA has addressed the comments received.

EPA has established a public docket for this ICR under Docket ID No. OAR–2005–0118, which is available for public viewing at the Air and Radiation Docket and Information Center in the EPA Docket Center (EPA/DC), EPA West, Room B102, 1301 Constitution Avenue, NW., Washington, DC. The EPA Docket Center Public Reading Room is open from 8:30 a.m. to 4:30 p.m., Monday through Friday, excluding legal holidays. The telephone number for the Reading Room is (202) 566–1744, and the telephone number for the Air and Radiation Docket is (202) 566–1742. An electronic version of the public docket is available through EPA Dockets (EDOCKET) at *http://www.epa.gov/edocket.* Use EDOCKET to submit or view public comments, access the index listing of the contents of the public docket, and to access those documents in the public docket that are available electronically. Once in the system, select ''search,'' then key in the docket ID number identified above.

Any comments related to this ICR should be submitted to EPA and OMB within 30 days of this notice. EPA's policy is that public comments, whether submitted electronically or in paper, will be made available for public viewing in EDOCKET as EPA receives them and without change, unless the comment contains copyrighted material, confidential business information (CBI), or other information whose public disclosure is restricted by statute. When EPA identifies a comment containing copyrighted material, EPA will provide a reference to that material in the version of the comment that is placed in EDOCKET. The entire printed comment, including the copyrighted material, will be available in the public docket. Although identified as an item in the official docket, information claimed as CBI, or whose disclosure is otherwise restricted by statute, is not included in the official public docket, and will not be available for public viewing in EDOCKET. For further information about the electronic docket, see EPA's **Federal Register** notice describing the electronic docket at 67 *FR* 38102 (May 31, 2002), or go to *www.epa.gov/edocket.*

Title: Air Pollution Regulations for Outer Continental Shelf Activities (Renewal).

Abstract: Section 328 (Air Pollution From Outer Continental Shelf Activities) of the Clean Air Act (CAA) as amended in 1990, gives EPA responsibility for regulating air pollution from Outer Continental Shelf (OCS) sources located offshore of the States along the Pacific, Arctic, and Atlantic Coasts, and along the eastern

Gulf of Mexico coast (off the coast of Florida). The U.S. Department of Interior's Minerals Management Service retained the responsibility for regulating air pollution from sources located in the western Gulf of Mexico. To comply with the requirements of section 328 of the CAA, EPA, on September 4, 1992 at 57 *FR* 40792, promulgated regulations to control air pollution from OCS sources in order to attain and maintain Federal and State ambient air quality standards and to comply with the provisions of part C of title I of the CAA. Sources located within 25 miles of a State's seaward boundary must comply with the same State/local air pollution control requirements as would be applicable if the source were located in the corresponding onshore area. Sources located more than 25 miles from a State's seaward boundary must comply with EPA air pollution control regulations. The regulations are codified as part 55 of chapter I of title 40 of the *Code of Federal Regulations* (CFR). On September 2, 1997, EPA made two court-ordered revisions to the regulations. The need and authority for this information collection is contained in section 328 of the CAA and in EPA OCS Air Regulations, codified as title 40 CFR part 55. The way such information is planned to be and/or has been used to further the proper performance of the functions of the agency is through the Administrator who must update the requirements as necessary to maintain consistency with onshore regulations. Each requirement established under section 328 is treated, for purposes of sections 113 (Federal Enforcement), 114 (Inspections, Monitoring, and Entry), 116 (Retention of State Authority), 120 (Noncompliance Authority), and 304 (Citizen Suits) of the CAA, as a standard under section 111 and a violation of any such requirements will be considered a violation of section 111(e) of the CAA. Responses to the collection of information are voluntary.

An agency may not conduct or sponsor, and a person is not required to respond to, a collection of information unless it displays a currently valid OMB control number. The OMB control numbers for EPA's regulations in 40 CFR are listed in 40 CFR part 9 and are identified on the form and/or instrument, if applicable.

Burden Statement: The annual public reporting and recordkeeping burden for this collection of information is estimated to average 549 hours per response. Burden means the total time, effort, or financial resources expended by persons to generate, maintain, retain, or disclose or provide information to or for a Federal agency. This includes the time needed to review instructions; develop, acquire, install, and utilize technology and systems for the purposes of collecting, validating, and verifying information, processing and maintaining information, and disclosing and providing information; adjust the existing ways to comply with any previously applicable instructions and requirements; train personnel to be able to respond to a collection of information; search data sources; complete and review the collection of information; and transmit or otherwise disclose the information.

Respondents/Affected Entities: Entities potentially affected by this action are all outer continental shelf sources except those located in the Gulf of Mexico west of 87.5 degrees longitude (near the border of Florida and Alabama). For sources located within 25 miles of States' seaward boundaries, the requirements are the same as those that would be applicable if the source were located in the corresponding onshore area. In States affected by this rule, State boundaries extend three miles from the coastline, except off the coast of the Florida Panhandle, where the State's boundary extends three leagues (about nine miles) from the coastline.

Estimated Number of Respondents: 49.

Frequency of Response: On occasion.

Estimated Total Annual Hour Burden: 34,024.

Estimated Total Annual Cost: $1,858,350, which includes $0 annualized capital/startup costs, $17,886 annual O&M costs, and $1,840,464 annual labor costs.

Changes in the Estimates: There is an increase of 375 hours in the total estimated burden currently identified in the OMB Inventory of Approved ICR Burdens. This increase is due to two main factors:

- Minerals Management Service has projected an increase in the number of Outer Continental Shelf existing development/production sources in need of equipment modifications over the course of the next three years, which is significantly greater than estimates at the time of the original and past ICR. Although there is an increase in modifications on existing sources, there are no new sources of development/production and, therefore, no capital cost burden. As a result, the total burden shows a reduction in cost when compared to the previous ICR burden.
- Adjustments to the estimate are in 2005 dollars.

Dated: October 24, 2005.

Oscar Morales,

Director, Collection Strategies Division.

[FR Doc. 05–21763 Filed 10–31–05; 8:45 am]

BILLING CODE 6560–50–P

ENVIRONMENTAL PROTECTION AGENCY

[Regional Docket No. V–2004–5, FRL–7991–9]

Clean Air Act Operating Permit Program; Petition for Objection to State Operating Permits for Midwest Generation Waukegan Station

AGENCY: Environmental Protection Agency (EPA).

ACTION: Notice of final orders on petitions to object to a state operating permit.

SUMMARY: This document announces that the EPA Administrator has responded to a citizen petition asking EPA to object to an operating permit proposed by the Illinois Environmental Protection Agency (IEPA). Specifically, the Administrator has partially granted and partially denied the petition submitted by the Lake County Conservation Alliance to object to the proposed operating permit for the Midwest Generation Waukegan station.

Pursuant to section 505(b)(2) of the Clean Air Act (Act), Petitioner may seek judicial review in the United States Court of Appeals for the appropriate circuit of those portions of the petition which EPA denied. Any petition for review shall be filed within 60 days from the date this notice appears in the **Federal Register**, pursuant to section 307 of the Act.

ADDRESSES: You may review copies of the final orders, the petitions, and other supporting information at the EPA Region 5 Office, 77 West Jackson Boulevard, Chicago, Illinois 60604. If you wish to examine these documents, you should make an appointment at least 24 hours before visiting day. Additionally, the final order for the Midwest Generation Waukegan station is available electronically at: *http://www.epa.gov/region07/programs/artd/air/title5/petitiondb/petitiondb2004.htm.*

FOR FURTHER INFORMATION CONTACT: Pamela Blakley, Chief, Air Permitting Section, Air Programs Branch, Air and Radiation Division, EPA, Region 5, 77 West Jackson Boulevard, Chicago, Illinois 60604, telephone (312) 886–4447.

SUPPLEMENTARY INFORMATION: The Act affords EPA a 45-day period to review,

and object to as appropriate, operating permits proposed by state permitting authorities. Section 505(b)(2) of the Act authorizes any person to petition the EPA Administrator within 60 days after the expiration of the EPA review period to object to state operating permits if EPA has not done so. Petitions must be based only on objections to the permit that were raised with reasonable specificity during the public comment period provided by the state, unless the petitioner demonstrates that it was impracticable to raise these issues during the comment period or the grounds for the issues arose after this period.

On January 29, 2004, the EPA received from the Lake County Conservation Alliance a petition requesting that EPA object to the proposed title V operating permit for the Midwest Generation Waukegan station. The petition raises issues regarding the permit issuance process and the permit itself. The Lake County Conservation Alliance alleged that the proposed permit (1) is legally inadequate because it does not impose an enforceable schedule to remedy non-compliance; (2) inappropriately provides for a permit shield that allows excess emissions during startup and malfunction, contrary to EPA policy; (3) fails to include applicable requirements; (4) fails to comply with the public notice requirements of the Act; (5) contains an inadequate statement of basis; (6) contains conditions that are not practically enforceable; (7) lacks adequate recordkeeping and recording requirements; (8) lacks origin and authority for each permit condition; (9) lacks adequate monitoring; and (10) is legally inadequate because it lacks the requirement to submit a compliance certification containing other such facts as IEPA may require to determine compliance.

On September 22, 2005, the Administrator issued an order partially granting and partially denying the petition. The order explains the reasons behind EPA's conclusion that the IEPA must: (1) Address in the permit record the Petitioner's comment regarding opacity exceedances; (2) determine if pre-existing state operating permit conditions are requirements with which Waukegan must comply, and either include the applicable requirements in the Title V permit, or explain in the statement of basis its reasoning for not including the requirements; (3) reopen the Waukegan permit (including a notice to the public stating the activities involved in the permit action) and make available to the public an adequate statement of basis which explains, among other things the reasons for each change to the state implementation plan (SIP) or construction permit terms. These explanations must be provided for any federally enforceable permit terms that have been newly established, modified, streamlined or deleted in the permit action; (4) remove ''operational condition'' and ''operating parameters'' from the permit or define the terms; (5) remove ''reasonable steps'' from the permit or define or provide criteria to determine ''reasonable steps'' that meet the requirements of the SIP; (6) either develop criteria for determining the normal range or develop another means to monitor compliance with the particulate matter (PM) emission limitations; (7) include a specific opacity limit or a method for determining an opacity limit that would correlate the results of the PM testing and the opacity limit in a manner that assures compliance with the PM limit, and incorporate into the permit specific operational limits (upper level or lower level) and/or operational ranges or a method for determining the ranges; and, (8) set a date that is as early as possible in the permit term by which Waukegan must conduct PM testing for use in establishing opacity monitoring and electrostatic precipitator parametric measures so that the permit includes appropriate monitoring conditions that are in effect during the permit term and assures compliance with the PM emission limitations for the coal-fired boilers for the entire term of the permit. The order also explains the reasons for denying Lake County Conservation Alliance's remaining claims.

Dated: October 14, 2005.

Bharat Mathur,

Acting Regional Administrator, Region 5.

[FR Doc. 05–21754 Filed 10–31–05; 8:45 am]

BILLING CODE 6560–50–P

ENVIRONMENTAL PROTECTION AGENCY

[FRL–7991–8]

Public Water System Supervision Program Revisions for the State of Indiana

AGENCY: Environmental Protection Agency (EPA).

ACTION: Notice of tentative approval.

SUMMARY: Notice is hereby given that the State of Indiana is revising its approved Public Water System Supervision Program. Indiana has revised its Public Notification (PN) Rule; its Lead and Copper Rule Minor Revisions (LCRMR) Rule; its Analytical Methods for Chemical and Microbiological Contaminants and revisions to Laboratory Certification Requirements; its revisions to Analytical Methods for Radionuclides Rule; and its Removal of the Prohibition on the Use of Point of Use Devices for compliance with National Primary Drinking Water Regulations Rule.

EPA has determined that these revisions by the State are no less stringent than the corresponding federal regulations. Therefore, EPA intends to approve these revisions to the State of Indiana's Public Water System Supervision Program. This approval action does not extend to public water systems (PWSs) in Indian Country, as the term is defined in 18 U.S.C. 1151. By approving these rules, EPA does not intend to affect the rights of federally recognized Indian Tribes in Indiana, nor does it intend to limit existing rights of the State of Indiana. Any interested party may request a public hearing. A request for a public hearing must be submitted by December 1, 2005 to the Regional Administrator at the EPA Region 5 address shown below. The Regional Administrator may deny frivolous or insubstantial requests for a hearing. However, if a substantial request for a public hearing is made by December 1, 2005, EPA Region 5 will hold a public hearing. If EPA Region 5 does not receive a timely and appropriate request for a hearing and the Regional Administrator does not elect to hold a hearing on his own motion, this determination shall become final and effective on December 1, 2005. Any request for a public hearing shall include the following information: The name, address, and telephone number of the individual, organization, or other entity requesting a hearing; a brief statement of the requesting person's interest in the Regional Administrator's determination and a brief statement of the information that the requesting person intends to submit at such hearing; and the signature of the individual making the request, or, if the request is made on behalf of an organization or other entity, the signature of a responsible official of the organization or other entity.

ADDRESSES: All documents relating to this determination are available for inspection at the following offices: Indiana Department of Environmental Management, Office of Water Quality, Drinking Water Branch, 100 N. Senate Avenue, P.O. Box 6015, Indianapolis, Indiana 46206–6015, between the hours of 8:30 a.m. and 4 p.m., Monday through Friday, and the United States Environmental Protection Agency,

Region 5, Ground Water and Drinking Water Branch (WG–15J), 77 West Jackson Boulevard, Chicago, Illinois 60604, between the hours of 9 a.m. and 4:30 p.m., Monday through Friday.

FOR FURTHER INFORMATION CONTACT: Margarita Chacon, EPA Region 5, Ground Water and Drinking Water Branch, at the address given above, by telephone at (312) 886–0225, or at *chacon.margarita@epa.gov.*

Authority: (Section 1413 of the Safe Drinking Water Act, as amended, 42 U.S.C. 3006–2 (1996), and 40 CFR part 142 of the National Primary Drinking Water Regulations).

Dated: October 24, 2005.

Norman Niedergang,

Acting Regional Administrator, Region 5.

[FR Doc. 05–21748 Filed 10–31–05; 8:45 am]

BILLING CODE 6560–50–P

EXPORT-IMPORT BANK OF THE UNITED STATES

Sunshine Act Meeting

ACTION: Notice of a Partially Open Meeting of the Board of Directors of the Export-Import Bank of the United States.

TIME AND PLACE: Friday, November 4, 2005 at 11:30 a.m. The Meeting will be held at Ex-Im Bank in Room 1143, 811 Vermont Avenue, NW., Washington, DC 20571.

OPEN AGENDA ITEM: Ex-Im Bank Sub-Saharan Africa Advisory Committee for 2006.

PUBLIC PARTICIPATION: The meeting will be open to public participation for Item No. 1 only.

FOR FURTHER INFORMATION CONTACT: For further information, contact: Office of the Secretary, 811 Vermont Avenue, NW., Washington, DC 20571 (Tele. No. 202–565–3957).

Howard A. Schweitzer,

General Counsel (Acting).

[FR Doc. 05–21860 Filed 10–28–05; 12:58 pm]

BILLING CODE 6690–01–M

FEDERAL RESERVE SYSTEM

Change in Bank Control Notices; Acquisition of Shares of Bank or Bank Holding Companies

The notificants listed below have applied under the Change in Bank Control Act (12 U.S.C. 1817(j)) and § 225.41 of the Board's Regulation Y (12 CFR 225.41) to acquire a bank or bank holding company. The factors that are considered in acting on the notices are set forth in paragraph 7 of the Act (12 U.S.C. 1817(j)(7)).

The notices are available for immediate inspection at the Federal Reserve Bank indicated. The notices also will be available for inspection at the office of the Board of Governors. Interested persons may express their views in writing to the Reserve Bank indicated for that notice or to the offices of the Board of Governors. Comments must be received not later than November 16, 2005.

A. Federal Reserve Bank of Richmond (A. Linwood Gill, III, Vice President) 701 East Byrd Street, Richmond, Virginia 23261–4528:

1. Charles F. Sposato Flint Trust and trustee Mark Wayne Saunters, Elkton, Maryland; to control voting shares of Cecil Bancorp, Inc., Elkton, Maryland, and thereby indirectly acquire voting shares of Cecil Federal Bank, Elkton, Maryland.

Board of Governors of the Federal Reserve System, October 27, 2005.

Robert deV. Frierson,

Deputy Secretary of the Board.

[FR Doc. E5–6024 Filed 10–31–05; 8:45 am]

BILLING CODE 6210–01–S

FEDERAL RESERVE SYSTEM

Notice of Proposals to Engage in Permissible Nonbanking Activities or to Acquire Companies that are Engaged in Permissible Nonbanking Activities

The companies listed in this notice have given notice under section 4 of the Bank Holding Company Act (12 U.S.C. 1843) (BHC Act) and Regulation Y (12 CFR Part 225) to engage *de novo*, or to acquire or control voting securities or assets of a company, including the companies listed below, that engages either directly or through a subsidiary or other company, in a nonbanking activity that is listed in § 225.28 of Regulation Y (12 CFR 225.28) or that the Board has determined by Order to be closely related to banking and permissible for bank holding companies. Unless otherwise noted, these activities will be conducted throughout the United States.

Each notice is available for inspection at the Federal Reserve Bank indicated. The notice also will be available for inspection at the offices of the Board of Governors. Interested persons may express their views in writing on the question whether the proposal complies with the standards of section 4 of the BHC Act. Additional information on all bank holding companies may be obtained from the National Information Center Web site at *www.ffiec.gov/nic/*.

Unless otherwise noted, comments regarding the applications must be received at the Reserve Bank indicated or the offices of the Board of Governors not later than November 16, 2005.

A. Federal Reserve Bank of Atlanta (Andre Anderson, Vice President) 1000 Peachtree Street, NE., Atlanta, Georgia 30303:

1. Cornerstone Bancshares, Inc., and EFI Acquisition, Inc., both of Chattanooga, Tennessee, to acquire voting shares of Eagle Financial, LLC and Eagle Funding, LLC, both of Chattanooga, Tennessee, and thereby engage in providing factoring services to small business and services as a loan broker serving as a facilitator to small businesses, pursuant to section 225.28(b)(1) of Regulation Y.

Board of Governors of the Federal Reserve System, October 27, 2005.

Robert deV. Frierson,

Deputy Secretary of the Board.

[FR Doc. E5–6025 Filed 10–31–05; 8:45 am]

BILLING CODE 6210–01–S

DEPARTMENT OF HEALTH AND HUMAN SERVICES

Meeting of the Presidential Advisory Council on HIV/AIDS

AGENCY: Department of Health and Human Services, Office of the Secretary, Office of Public Health and Science.

ACTION: Notice.

SUMMARY: As stipulated by the Federal Advisory Committee Act, the Department of Health and Human Services (DHHS) is hereby giving notice that the Presidential Advisory Council on HIV/AIDS (PACHA) will hold a meeting. This meeting is open to the public. A description of the Council's functions is included also with this notice.

Date and Time: November 14, 2005, 8:30 a.m. to 5 p.m.

ADDRESSES: Department of Health and Human Services, Hubert H. Humphrey Building, Room 800, 200 Independence Ave., SW., Washington, DC 20201.

FOR FURTHER INFORMATION CONTACT: Joseph Grogan, Esq., Executive Director, Presidential Advisory Council on HIV/AIDS, Department of Health and Human Services, Hubert H. Humphrey Building, 200 Independence Avenue, SW., Room 736E, Washington, DC 20201; or visit the Council's Web site at *http://www.pacha.gov.*

SUPPLEMENTARY INFORMATION: PACHA was established by Executive Order 12963, dated June 14, 1995, as amended by Executive Order 13009, dated June 14, 1996. PACHA was established to provide advice, information, and recommendations to the President regarding programs and policies intended to (a) promote effective prevention of HIV disease, (b) advance research on HIV and AIDS, and (c) promote quality services to persons living with HIV disease and AIDS. PACHA was established to serve solely as an advisory body to the President and the Secretary of Health and Human Services. PACHA is composed of not more than 21 members. PACHA membership is determined by the Secretary from individuals who are considered authorities with particular expertise in, or knowledge of, matters concerning HIV/AIDS.

The agenda for this meeting includes the following topics: HIV/AIDS prevention, care and treatment, and global HIV/AIDS issues. Time will be allotted during the meeting for public comment.

Public attendance is limited to space available and pre-registration is required for both attendance and public comment. Any individual who wishes to attend and/or comment must register on-line at *http://www.pacha.gov.* Individuals who need special assistance, such as sign language interpretation or other reasonable accommodations, should indicate when registering on-line.

Members of the public will have the opportunity to provide comments at the meeting. Public comment will be limited to three (3) minutes per speaker and to time available. Written testimony, not exceed five (5) pages, will be accepted by mail or facsimile at 202/205–4986.

Written testimony will not be accepted after 5 p.m., Wednesday, November 9, 2005.

Dated: October 26, 2005.

Joseph Grogan,

Executive Director, Presidential Advisory Council on HIV/AIDS.

[FR Doc. 05–21714 Filed 10–31–05; 8:45 am]

BILLING CODE 4150–43–P

DEPARTMENT OF HEALTH AND HUMAN SERVICES

Centers for Disease Control and Prevention

Statement of Organization, Functions, and Delegations of Authority

Part C (Centers for Disease Control and Prevention) of the Statement of Organization, Functions, and Delegations of Authority of the Department of Health and Human Services (45 FR 67772–76, dated October 14, 1980, and corrected at 45 FR 69296, October 30, 1980, as amended most recently at 69 FR 77756, dated December 28, 2004) is amended to reorganize the National Center for HIV, STD, & TB Prevention.

Section C–B, Organization and Functions, is hereby amended as follows:

Delete in its entirety the following titles and functional statements: *Division of AIDS, STD & TB Laboratory Research (CK7), Office of the Director (CK71), HIV, Immunology and Diagnostics Branch (CK72), HIV Immunology and Diagnostics Branch (CK73), Sexually Transmitted Infectious Diseases Branch (CK74), Tuberculosis/ Mycobacteriology Branch (CK75).*

Following the *Training and Health Communication Branch (CK37), Division of STD Prevention (CK3)*, insert the following:

Laboratory Reference and Research Branch, (CK38). (1) Performs research on the pathogenesis, genetics, and immunology of syphilis and other treponematoses, gonococcal and chlamydial infections, chancroid, genital herpes, donovanosis, bacterial vaginosis and trichomoniasis; (2) conducts and participates in clinical, field, and laboratory research to develop, evaluate, and improve laboratory methods used in the diagnosis and epidemiology of these sexually transmitted infections (STIs); (3) provides consultation and reference/ diagnostic services for these STIs; (4) conducts laboratory-based surveillance for and research on the genetics of antimicrobial resistance in Neisseria gonorrhoeae; (5) serves as the WHO International Collaborating Center for Reference and Research in Syphilis Serology; and (6) provides consultation and laboratory support for international activities.

Following the *International Research and Programs Branch (CK47), Division of Tuberculosis Elimination (CK4)*, insert the following:

Mycobacteriology Branch (HCK48). (1) Provides laboratory support for epidemic investigations, surveillance activities, and special studies of tuberculosis and other mycobacteria-caused diseases; (2) administers contracts to provide Mycobacterium tuberculosis genotyping, maintains a national database of genotypes, and conducts operational research to implement genotyping; (3) develops and evaluates new methods to subtype mycobacteria for epidemiologic studies; (4) serves as primary CDC focus for diagnostic mycobacteriology laboratory services and for laboratory aspects of nontuberculosis Mycobacterium species and of Hansen disease (leprosy); (5) administers grants and cooperative agreements with states and others to upgrade laboratory activities and provide special services; (6) provides reference diagnostic services, consultation, technical assistance, and training to State, Federal, and municipal public health laboratories; (7) provides laboratory support, reference services, assessment, consultation, and training for CDC's international tuberculosis activities; (8) develops, evaluates, or improves conventional and molecular methods for the detection, classification, identification, characterization, and susceptibility testing of mycobacteria and mycobacteria-caused diseases; (9) conducts studies to define the role of bacterial virulence factors, host factors, and pathogenic and immunologic mechanisms in disease processes and protective immunity and develops, evaluates, and improves immunologic methods for the diagnosis and prevention of mycobacteria-caused diseases; (10) develops tissue culture and animal models of mycobacteria-caused diseases and conducts studies on chemotherapy, immunotherapy, pathogenesis, pathology, and vaccines for mycobacteria-caused diseases; (11) conducts studies on the isolation, taxonomy, and ecology of mycobacteria and develops tests to identify new species; (12) conducts and supports studies to characterize newly emerging pathogenic species of Mycobacterium and associated diseases.

Following the *HIV Incidence and Case Surveillance Branch (CK56), Division of HIV, AIDS Prevention—Surveillance and Epidemiology (CK5),* insert the following:

HIV and Retrovirology Laboratory Branch (HCK57). (1) Conducts studies of human immunodeficiency viruses (HIVs) and other human and zoonotic retroviruses, including the diseases they cause, their modes of transmission, and the means for their control through virus detection, isolation, and characterization by virologic, molecular, and cellular biologic methods; (2)

collaborates with NCHSTP investigators to conduct HIV epidemiologic and surveillance studies worldwide particularly as they pertain to prevention and intervention strategies; (3) identifies and characterizes new HIV isolates and develops new screening tests for these isolates to determine their prevalence in various populations; (4) determines geotypic and phenotypic variations of HIVs that may affect pathogenesis, drug resistance, persistence, virulence, and transmissibility; (5) conducts and supports field epidemiologic investigations of the prevalence, distribution, trends, and risk factors associated with non-AIDS retroviral infections and associated diseases; (6) serves as a World Health Organization (WHO) Reference Center and as a member of the UNAIDS Virus Network to provide international consultation and technical assistance on laboratory procedures for HIV isolation, detection, and characterization; (7) develops and evaluates procedures for the isolation and characterization of HIV and for the detection of retroviral DNA or RNA from clinical samples; (8) provides training, reference testing, and reference reagents for virologic and molecular characterization of divergent HIVs for public health laboratories in the United States and WHO; (9) serves as a reference laboratory for the isolation of zoonotic retroviruses from clinical samples; (10) develops collaborations with other CDC and non-CDC scientists to promote scientific progress and accomplishments; and (11) collaborates with industry to promote commercialization of useful technology, methodologies, and reagents of public health importance.

HIV Immunology and Diagnostic Laboratory Branch (HCK58). (1) Conducts basic and applied studies of microbial-host interactions that occur in infections, particularly infection with human immunodeficiency virus (HIV); (2) conducts basic and applied investigations of the immune cell interactions that occur in HIV infection as well as in related immunologic/infectious diseases; conducts investigations of genetic traits of the host that influence the susceptibility, disease course, and immune response to infectious disease, particularly HIV diseases; (3) conducts studies related to the development, evaluation, improvement, and standardization of laboratory technologies uses for the diagnosis, surveillance, and monitoring of HIV infection both independently and in collaboration with the biotechnology industry; (4) performs HIV antigen and antibody testing plus related standardized assays in support of the diagnostic/surveillance/epidemiologic requirements of CDC-based and CDC-affiliated studies of the HIV epidemic; (5) serves as a reference laboratory for State and local health departments; and (6) provides diagnostic services to other Federal agencies, the World Health Organization, CDC-affiliated academic centers, CDC-affiliated studies with other countries, and community organizations, as appropriate.

Dated: April 1, 2005.

William H. Gimson,

Chief Operating Officer, Centers for Disease Control and Prevention (CDC).

[FR Doc. 05–21672 Filed 10–31–05; 8:45 am]

BILLING CODE 4160–18–M

DEPARTMENT OF HEALTH AND HUMAN SERVICES

Centers for Medicare and Medicaid Services

Notice of Grant Award to MedCO Health Solutions, Inc., To Evaluate an Open-Source Project Entitled, ''A Comparison of Multiple Methods to Incent Physicians To Adopt Electronic Prescribing Devices''

AGENCY: Centers for Medicare and Medicaid Services (CMS), HHS.

ACTION: Notice of Grant Award.

SUMMARY: The Centers for Medicare and Medicaid Services has awarded a grant entitled, ''A Comparison of Multiple Methods To Incent Physicians To Adopt Electronic Prescribing Devices'' to Medco Health Solutions, Inc., 100 Parsons Pond Drive, Franklin Lakes, NJ 07417 in response to an unsolicited proposal. The period of performance is August 1, 2005 through July 31, 2006. The purpose of this grant is to fund an initial evaluation of the Southeastern Michigan e-Prescribing Initiative (SEMI) project. Through the use of e-prescribing, this program is intended to reduce the costs associated with the use of prescription drugs, and improve safety for patients, including Medicare beneficiaries, associated with an estimated 6,000 targeted physicians/prescribers in Southeastern Michigan. The project involves the active collaboration of multiple employers, insurance entities and care providers in eight counties in Southeastern Michigan. Partners include the Big Three automakers, Ford, General Motors and Daimler Chrysler; Blue Cross/Blue Shield of Michigan; Henry Ford Health System/Health Alliance Plan; Health Plus of Michigan; SureScripts, RxHub and MedCo. This is a unique project in terms of size, sponsoring organizations, patient base, geographic area, and approach. This project is consistent with CMS' goals to improve health care quality, patient safety, and the use of electronic prescribing. Funding of this unsolicited proposal will result in a desirable public benefit in that its aim is to provide needed information on the costs and critical success factors associated with the adoption of electronic prescribing, as well as to provide improvements in quality and safety of care delivery.

FOR FURTHER INFORMATION CONTACT: Maria Friedman, Project Officer, Office of e-health Standards and Services, Centers for Medicare and Medicaid Services, 7500 Security Blvd., Stop S2–27–17, Baltimore, MD 21244, (410) 786–6333 or Judy Norris, Grants Officer, Department of Health and Human Services, OOM/AGG/CMS, 7500 Security Blvd., Stop S2–21–15, Baltimore, MD 21244, (410) 786–5130.

Authority: Catalog of Federal Domestic Assistance Program No. 93–779, Center for Medicare and Medicaid Services, Research, Demonstrations and Evaluations; Section 1110 of the Social Security Act.

Dated: August 9, 2005.

Mark B. McClellan,

Administrator, Centers for Medicare and Medicaid Services.

[FR Doc. 05–21731 Filed 10–31–05; 8:45 am]

BILLING CODE 4120–01–P

DEPARTMENT OF HEALTH AND HUMAN SERVICES

Administration for Children and Families

Submission for OMB Review; Comment Request

Title: The National Evaluation of the Court Improvement Program.

OMB No.: New Collection.

Description: The National Evaluation of the Court Improvement Program will describe the many paths followed by state courts to improve their oversight of child welfare cases, and will provide the field with information on effective models for juvenile and family court reform. Funded by the Children's Bureau, U.S. Department of Health and Human Services (HHS) in 2004, the five-year study is being carried out by a partnership of three organizations consisting of Planning and Learning Technologies (Pal-Tech, Inc.), the Urban Institute and the Center for Policy Research.

The Federal Court Improvement Program (CIP) was established in 1994 as a source of funding for state courts to assess and improve their handling of foster care and adoption proceedings. The funding is codified in title IV–B, subpart 2 of the Social Security Act, Section 438, as part of the Promoting Safe and Stable Families Program. Although anecdotal information documents the program's success, this is the first national evaluation of CIP. This study builds on the recommendations of a Children's Bureau funded evaluability assessment (EA) of the program completed in 2003 by James Bell Associates, Inc.

The National Evaluation of the Court Improvement Program involves three interrelated components:

1. *Reviewing and synthesizing state and local court reform activities:* This component will describe the full range of CIP-funded court reforms undertaken by states at the beginning and ending of the study's data collection period. Additionally, it will provide insights into states' reform priorities and how these shift over time. Especially promising models of reform will be highlighted. Finally, this component will provide important contextual information for the study's in-depth evaluation component of select models of reform. Information for this activity will be synthesized from existing reports submitted by states to the Children's Bureau.

2. *Reviewing and synthesizing existing court reform evaluations:* This component will identify and synthesize findings from research and evaluation conducted on family and juvenile court reforms. It will provide important context for the study's in-depth evaluation component in two ways. Findings on reform activities beyond those captured within the study sites will be provided. It will also help inform evaluation within the study sites by providing information on previously conducted evaluation of similar reform models. Information for this activity will be synthesized from existing evaluations and studies of court reform. Evaluations will be prioritized for synthesis based on their methodological rigor and findings reported in the substantive areas defined by the EA. These are:

- Alternative dispute resolution.
- Training and educational materials.
- Case tracking and management.
- Improvements to the consistency and quality of hearings.
- Parent/caregiver outreach, education, and support.
- Systemic court reforms.

3. *Conducting in-depth studies of reform models:* In-depth evaluation of select models of reform will be undertaken within three, diverse sites across the country. The study designs vary among sites, and include quasi-experimental and descriptive outcome methodologies. Reflecting the Adoption and Safe Families Act, the primary outcome areas of interest will be child safety, the timely achievement of permanency, and child well-being. Within each site, outcome evaluation will be complemented by a qualitative study of the many factors that impacted reform including other related reform efforts, the evolution of the target reform over time, barriers encountered, and methods by which these barriers were overcome.

The outcome evaluation will utilize information from existing court and child welfare agency management information systems. Within select sites, information from these sources will be supplemented with information abstracted from existing court and/or child welfare agency case records. The process evaluation will help inform outcome findings within the study sites as well as provide important insights for the replication of the model within other sites. It will involve the collection of new information through structured focus groups and interviews with key individuals, as well as court observations of child dependency hearings. This descriptive information will be collected twice during the study.

The three sites selected for in-depth analysis are the following:

- *Connecticut's Case Management Protocol:* Piloted in December 1997, the protocol involves a pre-hearing conference of professionals held early in the dependency court process coupled with expanded parent representation.
- *Delaware's Systemic Reform:* Piloted in 2000, the three primary components of the state's comprehensive reform effort are:
- One judge/one case assignment practice where one judge presides over all legal stages of a dependency case
- Defined sequence of hearings and reviews that significantly increases the number of hearings and oversight role of the courts
- Representation for indigent parents in child welfare proceedings
- *Texas' Cluster Courts:* Piloted in 1997, these courts are located in rural areas of the state. Each court serves a cluster of contiguous counties, and a specially trained judge is appointed to travel to each county within a cluster on a given day to hear that county's child welfare cases. The cluster courts were formed to enable rural counties to meet the state's strict permanency statute guidelines that were enacted January 1, 1998.

Collectively, findings from the three study components will capture the ongoing nationwide process of court reform supported by the Court Improvement Program. A technical work group comprised of leading researchers, judicial and child welfare agency officials and representatives of public interest groups has been assembled to provide input at key points during the study.

Respondents: Study respondents include individuals in the following categories among the three study sites noted above:

- Court Improvement Program (CIP) administrators.
- Judges.
- Attorneys (representing the parent, child, and agency).
- Court Appointed Special Advocates (CASAs) and Guardians Ad Litem (GALs).
- Child welfare agency administrators.
- Regional child welfare directors and supervisors.
- Child welfare agency caseworkers.

Annual Burden Estimates

ANNUAL BURDEN ESTIMATES

Instrument	Number of respondents	Number of responses per respondent	Average burden hours per response	Total burden hours
CIP Administrators	8	1	2	16
Judges	30	1	1	30
Attorneys (parent and agency)	95	1	2	190
CASAs and GALs	55	1	2	110
Child Welfare Agency Administrators	10	1	1	10
Child Welfare Agency Directors & Supervisors	30	1	2	60

ANNUAL BURDEN ESTIMATES—Continued

Instrument	Number of respondents	Number of responses per respondent	Average burden hours per response	Total burden hours
Child Welfare Agency Workers	120	1	2	240
Total				656

Estimated Total Annual Burden Hours: 656.

Additional Information

Copies of the proposed collection may be obtained by writing to the Administration for Children and Families, Office of Administration, Office of Information Services, 370 L'Enfant Promenade, SW., Washington, DC 20447, Attn: ACF Reports Clearance Officer. All requests should be identified by the title of the information collection. e-mail address: *infocollection@acf.hhs.gov*.

OMB Comment

OMB is required to make a decision concerning the collection of information between 30 and 60 days after publication of this document in the **Federal Register**. Therefore, a comment is best assured of having its full effect if OMB receives it within 30 days of publication. Written comments and recommendations for the proposed information collection should be sent directly to the following: Office of Management and Budget, Paperwork Reduction Project, Attn: Desk Officer for ACF, E-mail address: *Katherine_T._Astrich@omb.eop.gov*.

Dated: October 28, 2005.

Robert Sargis,

Reports Clearance Officer.

[FR Doc. 05–21674 Filed 10–31–05; 8:45 am]

BILLING CODE 4184–01–M

DEPARTMENT OF HEALTH AND HUMAN SERVICES

Food and Drug Administration

[Docket No. 2005N–0426]

Agency Information Collection Activities; Proposed Collection; Comment Request; Notice of Participation

AGENCY: Food and Drug Administration, HHS.

ACTION: Notice.

SUMMARY: The Food and Drug Administration (FDA) is announcing an opportunity for public comment on the proposed collection of certain information by the agency. Under the Paperwork Reduction Act of 1995 (the PRA), Federal agencies are required to publish notice in the **Federal Register** concerning each proposed collection of information, including each proposed extension of an existing collection of information, and to allow 60 days for public comment in response to the notice. This notice solicits comments on reporting requirements for filing a notice of participation with FDA.

DATES: Submit written or electronic comments on the collection of information by January 3, 2006.

ADDRESSES: Submit electronic comments on the collection of information to: *http://www.fda.gov/dockets/ecomments*. Submit written comments on the collection of information to the Division of Dockets Management (HFA-305), Food and Drug Administration, 5630 Fishers Lane, rm. 1061, Rockville, MD 20852. All comments should be identified with the docket number found in brackets in the heading of this document.

FOR FURTHER INFORMATION CONTACT: Jonna Capezzuto, Office of Management Programs (HFA-250), Food and Drug Administration, 5600 Fishers Lane, Rockville, MD 20857, 301–827–4659.

SUPPLEMENTARY INFORMATION: Under the PRA (44 U.S.C. 3501–3520), Federal agencies must obtain approval from the Office of Management and Budget (OMB) for each collection of information they conduct or sponsor. ''Collection of information'' is defined in 44 U.S.C. 3502(3) and 5 CFR 1320.3(c) and includes agency requests or requirements that members of the public submit reports, keep records, or provide information to a third party. Section 3506(c)(2)(A) of the PRA (44 U.S.C. 3506(c)(2)(A)) requires Federal agencies to provide a 60-day notice in the **Federal Register** concerning each proposed collection of information, including each proposed extension of an existing collection of information, before submitting the collection to OMB for approval. To comply with this requirement, FDA is publishing notice of the proposed collection of information set forth in this document.

With respect to the following collection of information, FDA invites comments on these topics: (1) Whether the proposed collection of information is necessary for the proper performance of FDA's functions, including whether the information will have practical utility; (2) the accuracy of FDA's estimate of the burden of the proposed collection of information, including the validity of the methodology and assumptions used; (3) ways to enhance the quality, utility, and clarity of the information to be collected; and (4) ways to minimize the burden of the collection of information on respondents, including through the use of automated collection techniques, when appropriate, and other forms of information technology.

Notice of Participation—21 CFR 12.45 (OMB Control Number 0910–0191)—Extension

Section 12.45 (21 CFR 12.45) issued under section 701 of the Federal Food, Drug, and Cosmetic Act (21 U.S.C. 371), sets forth the format and procedures for any interested person to file a petition to participate in a formal evidentiary hearing, either personally or through a representative. Section 12.45 requires that any person filing a notice of participation, state their specific interest in the proceedings, including the specific issues of fact about which the person desires to be heard. This section also requires that the notice include a statement that the person will present testimony at the hearing and will comply with specific requirements in § 12.85. Or, in the case of a hearing before a Public Board of Inquiry (21 CFR 13.25), concerning disclosure of data and information by participants. In accordance with § 12.45(e) the presiding officer may omit a participant's appearance.

The presiding officer and other participants will use the collected information in a hearing to identify specific interests to be presented. This preliminary information serves to expedite the prehearing conference and commits participation.

The respondents are individuals or households, State or local governments, not for profit institutions, and

businesses, or other for profit groups and institutions.

FDA estimates the burden of this collection of information as follows:

21 CFR Section	No. of Respondents	Annual Frequency per Response	Total Annual Responses	Hours per Response	Total Hours
12.45	264	1	264	3	792

[1] There are no capital costs or operating and maintenance costs associated with this collection of information.

Dated: October 26, 2005.

Jeffrey Shuren,

Assistant Commissioner for Policy.

[FR Doc. 05–21774 Filed 10–31–05; 8:45 am]

BILLING CODE 4160–01–S

DEPARTMENT OF HEALTH AND HUMAN SERVICES

Food and Drug Administration

[Docket No. 2005D–0412]

Guidance for Industry: A Notice from the Food and Drug Administration to Growers, Food Manufacturers, Food Warehouse Managers, and Transporters of Food Products on Decontamination of Transport Vehicles; Availability

AGENCY: Food and Drug Administration, HHS.

ACTION: Notice.

SUMMARY: The Food and Drug Administration (FDA) is announcing the availability of a guidance for industry entitled ''A Notice from the Food and Drug Administration to Growers, Food Manufacturers, Food Warehouse Managers, and Transporters of Food Products on Decontamination of Transport Vehicles.'' This guidance is intended to provide information and references that can be used for the decontamination of food transport vehicles following Hurricanes Katrina and Rita in August and September 2005. The scope of this guidance is limited to decontamination of trucks, rail cars, and cold storage units that were flooded or otherwise impacted by the hurricanes, before being placed back in service to transport or store food.

DATES: This guidance is final upon the date of publication. Submit written or electronic comments on agency guidances at any time.

ADDRESSES: Submit written requests for single copies of the guidance to the Division of Plant Product Safety (HFS–305), Center for Food Safety and Applied Nutrition, Food and Drug Administration, 5100 Paint Branch Pkwy., College Park, MD 20747. Send one self-addressed adhesive label to assist that office in processing your requests or include a fax number to which the guidance may be sent. Submit written comments on the guidance to the Division of Dockets Management (HFA–305), Food and Drug Administration, 5630 Fishers Lane, rm. 1061, Rockville, MD 20852. Submit electronic comments to *http://www.fda.gov/dockets/ecomments*. See the **SUPPLEMENTARY INFORMATION** section for electronic access to the guidance.

FOR FURTHER INFORMATION CONTACT: Michael E. Kashtock, Center for Food Safety and Applied Nutrition (HFS–305), Food and Drug Administration, 5100 Paint Branch Pkwy., College Park, MD 20747, 301–436–2022.

SUPPLEMENTARY INFORMATION:

I. Background

In the aftermath of Hurricanes Katrina and Rita, the Center for Food Safety and Applied Nutrition has received inquiries about how food transport units such as trucks, rail cars, and cold storage units that were flooded or otherwise impacted by the hurricanes may be decontaminated for return to service to transport food. FDA is announcing the availability of a guidance document that provides information and references addressing this subject.

FDA is issuing this document as a level 1 guidance consistent with FDA's good guidance practices regulation (§ 10.115 (21 CFR 10.115)). The guidance is being implemented immediately without prior public comment, under § 10.115(g)(2), because the agency has determined that prior public participation is not feasible or appropriate.

II. Comments

Interested persons may submit to the Division of Dockets Management (see **ADDRESSES**) written or electronic comments regarding this guidance. Submit a single copy of electronic comments or two paper copies of any mailed comments, except that individuals may submit one paper copy. Comments are to be identified with the docket number found in brackets in the heading of this document. The guidance and received comments may be seen in the Division of Dockets Management between 9 a.m. and 4 p.m., Monday through Friday.

III. Electronic Access

Persons with access to the Internet may obtain the guidance document at *http://www.cfsan.fda.gov/guidance.html*.

Dated: October 14, 2005.

Jeffrey Shuren,

Assistant Commissioner for Policy.

[FR Doc. 05–21642 Filed 10–31–05; 8:45 am]

BILLING CODE 4160–01–S

DEPARTMENT OF HEALTH AND HUMAN SERVICES

Health Resources and Services Administration

Agency Information Collection Activities: Proposed Collection: Comment Request

In compliance with the requirement for opportunity for public comment on proposed data collection projects (section 3506(c)(2)(A) of Title 44, United States Code, as amended by the Paperwork Reduction Act of 1995, Pub. L. 104–13), the Health Resources and Services Administration (HRSA) publishes periodic summaries of proposed projects being developed for submission to the Office of Management and Budget (OMB) under the Paperwork Reduction Act of 1995. To request more information on the proposed project or to obtain a copy of the data collection plans and draft instruments, call the HRSA Reports Clearance Officer on (301) 443–1129.

Comments are invited on: (a) Whether the proposed collection of information is necessary for the proper performance of the functions of the agency, including whether the information shall have practical utility; (b) the accuracy of the agency's estimate of the burden of the proposed collection of information; (c) ways to enhance the quality, utility, and clarity of the information to be collected; and (d) ways to minimize the burden of the collection of information on respondents, including through the use of automated collection techniques or other forms of information technology.

Proposed Project: Uncompensated Services Assurance Report (OMB No. 0915–0077)—Extension

Under the Hill-Burton Act, the Government provides grants and loans for construction or renovation of health care facilities. As a condition of receiving this construction assistance, facilities are required to provide services to persons unable to pay. A condition of receiving this assistance requires facilities to provide assurances periodically that the required level of uncompensated care is being provided, and that certain notification and record keeping procedures are being followed. These requirements are referred to as the uncompensated services assurance.

ESTIMATE OF INFORMATION COLLECTION BURDEN

Type of requirement and regulatory citation	No. of respondents	Responses per respondent	Total responses	Hours per response	Total hour burden
Disclosure Burden (42 CFR)					
Published Notices (124.504(c))	206	1	206	0.17	35
Individual Notices (124.504(c))	206	1	206	35.5	7,313
Determinations of Eligibility (124.507)	206	396	81,576	0.37	30,183
Subtotal Disclosure Burden					37,531
Reporting					
Uncompensated Services Report B HRSA-710 Form (124.509(a))	10	1	10	11.0	110
Application for Compliance Alternatives:					
Public Facilities (124.513)	4	1	4	6.0	24
Small Obligation Facilities (124.514(c))	0				
Charitable Facilities (124.516(c))	2	1	2	6.0	12
Annual Certification for Compliance Alternatives:					
Public Facilities (124.509(b))	144	1	144	0.5	72
Charitable Facilities (124.509(b))	28	1	28	0.5	14
Small Obligation Facilities (124.509(c))	1	1	1	0.5	1
Complaint Information (124.511(a)):					
Individuals	10	1	10	0.25	3
Facilities	10	1	10	0.5	5
Subtotal Reporting Burden					241

Recordkeeping	Number of record keepers	Hours per year	Total hour burden
Non-alternative Facilities (124.510(a))	206	50	10,300
Subtotal Recordkeeping Burden			10,300

The total burden for this project is estimated to be 48,072 hours.

Written comments and recommendations concerning the proposed information collection should be sent within 60 days of this notice to: Susan G. Queen, Ph.D., HRSA Reports Clearance Officer, Parklawn Building Room 10–33, Health Resources and Services Administration, 5600 Fishers Lane, Rockville, MD 20857.

Dated: October 25, 2005.

Tina M. Cheatham,

Director, Division of Policy Review and Coordination.

[FR Doc. 05–21643 Filed 10–31–05; 8:45 am]

BILLING CODE 4165–15–P

DEPARTMENT OF HEALTH AND HUMAN SERVICES

National Institutes of Health

Proposed Collection; Comment Request; Tobacco Use Supplement to the Current Population Survey Series: 2006–2007 Tobacco Use Supplement to the Current Population Survey

SUMMARY: In compliance with the requirement of section 3506(c)(2)(A) of the Paperwork Reduction Act of 1995, for opportunity for public comment on proposed data collection projects, the National Cancer Institute (NCI), the National Institutes of Health (NIH) will publish periodic summaries of proposed projects to be submitted to the Office of Management and Budget (OMB) for review and approval.

Proposed Collection

Title: Tobacco Use Supplement to the Current Population Survey Series: 2006–2007 Tobacco Use Supplement to the Current Population Survey.

Type of information request: Reinstatement with Change of OMB #0925–0368, Expiration 01/31/2004.

Need and Use of Information Collection: The 2006–2007 Tobacco Use Supplement to the Current Population Survey conducted by the Census Bureau will collect data from the civilian non-institutionalized population on tobacco use, smoking prevalence and attempts at cessation; workplace smoking policies; health professional advice to stop smoking; and changes in smoking norms and attitudes. This survey will provide invaluable information to government agencies and departments, other scientists and the general public necessary for tobacco control research, as well as measure progress toward

tobacco control as part of the National Cancer Institute's (NCI's) Cancer Progress Report, and the Department of Health and Human Services' Healthy People 2010 Goals. It is also relevant to past reports of NCI plans for the National Investment in Cancer Research and NCI's long-term strategic plan for eliminating the suffering and death due to cancer. This survey is part of a continuing series of surveys that were sponsored by NCI and fielded periodically over the 1990's by the Census Bureau as part of the American Stop Smoking Intervention Study for Cancer Prevention (ASSIST) project and made available for general public use. The Tobacco Use Supplements since 2001–02 have been fielded and will be continuing over the next decade alternating between a standard or core tobacco use survey (such as this 2006–2007 survey) and a special topic survey focusing on emerging adult tobacco control issues (such as the 2003 Tobacco Use Special Cessation Supplement). The survey will allow state specific estimates to be made. Data will be collected in May 2006, August 2006 and January 2007 from approximately 285,000 respondents. The National Cancer Institute is co-sponsoring this survey with the Centers for Disease Control and Prevention.

Frequency of Response: One-time study.

Affected Public: Individuals or households.

Type of Respondents: Persons 15 years of age or older. The annual reporting burden is presented in exhibit 1 below. There are no Capital Costs, Operating Costs and/or Maintenance Costs to report.

EXHIBIT 1.—ESTIMATES OF RESPONDENT HOUR BURDEN

Number of respondents (number of annual respondents)	Frequency of response	Average burden hours per response	Total hour burden (total annual hour burden)
285,000 (95,000)	1	0.1169	33,317 (11,106)

Request for Comments: Written comments and/or suggestions from the public and affected agencies should address one or more of the following points: (1) Evaluate whether the proposed collection of information is necessary for the proper performance of the function of the agency, including whether the information will have practical utility; (2) evaluate the accuracy of the agency's estimate of the burden of the proposed collection of information, including the validity of the methodology and assumptions used; (3) enhance the quality, utility and clarity of the information to be collected; and (4) minimize the burden of the collection of information on those who are to respond, including the use of appropriate automated, electronic, mechanical, or other technological collection techniques or other forms of information technology.

FOR FURTHER INFORMATION CONTACT: To request more information on the proposed project or to obtain a copy of the data collection plans and instruments, contact Anne Hartman, M.S., M.A., Health Statistician, National Cancer Institute, Executive Plaza North—Suite 4005, 6130 Executive Blvd., MSC 7344, Bethesda, Maryland 20892–7344, or call non-toll free (301) 496–4970, or fax your request to (301) 435–3710, or e-mail your request, including your address, to *ah42t@nih.gov* or *Anne_Hartman@nih.gov.*

Comments Due Dates

Comments regarding this information collection are best assured of having their full effect if received within 60 days of the date of this publication.

Dated: October 25, 2005.

Rachelle Ragland-Greene,

National Institutes of Health, NCI Project Clearance Liaison.

[FR Doc. 05–21645 Filed 10–31–05; 8:45 am]

BILLING CODE 4101–01–M

DEPARTMENT OF HEALTH AND HUMAN SERVICES

National Institutes of Health

Submission for OMB Review; Comment Request; Assessment of the Use of Special Funding for Research on Type 1 Diabetes Provided by the Balanced Budget Act of 1997, the FY 2001 Consolidated Appropriations Act, and the Public Health Service Act Amendment for Diabetes

Summary: Under the provisions of section 3507(a)(1)(D) of the Paperwork Reduction Act of 1995, the National Institute of Diabetes and Digestive and Kidney Diseases (NIDDK), the National Institutes of Health (NIH) has submitted to the Office of Management and Budget (OMB) a request for review and approval of the information collection listed below. This proposed information collection was previously published in the **Federal Register** on March 10, 2005, page 11994 and allowed 60 days for public comment. No public comments were received. The purpose of this notice is to allow an additional 30 days for public comment. The National Institutes of Health may not conduct or sponsor, the respondent is not required to respond to, an information collection that has been extended, revised, or implemented on or after October 1, 1995, unless it displays a currently valid OMB control number.

Proposed Collection

Title: Assessment of the Use of Special Funding for Research on Type 1 Diabetes Provided by the Balanced Budget Act of 1997, and the FY 2001 Consolidated Appropriations Act, and the Public Health Service Act Amendment for Diabetes. *Type of Information Collection Requested:* Revision, OMB control number: 0925–0503; expiration date: 06/30/2005. *Need and Use of Information Collection:* This survey will be one source of input into a statutorily mandated assessment and report to the Congress on special funding for research on type 1 diabetes provided by the Balanced Budget Act of 1997, (Pub. L. 105–33), the FY 2001 Consolidated Appropriations Act, (Pub. L. 106–554), and the Public Health Service Act Amendment for Diabetes, (Pub. L. 107–360). Collectively, these Acts provided $1.14 billion in special funds to the Department of Health and Human Services (HHS) for research aimed at understanding, treating, and preventing type 1 diabetes and its complications. The Secretary of HHS subsequently designated to the NIDDK the lead responsibility in the Department for developing a process for allocation of these funds. The primary objective of this study is to gain information, via a brief questionnaire, from NIH research grantees who were the primary recipients of these special funds, concerning their views on the impact of the type 1 diabetes research

fundings with respect to: (1) Advancing scientific accomplishments involving innovative, clinically relevant, and multidisciplinary research on type 1 diabetes; (2) developing resources or reagents useful for type 1 diabetes research; and (3) increasing the number and quality of type 1 diabetes investigators. The responses will provide valuable information concerning how the funds have facilitated research as intended by these Acts of the Congress. The results will also help determine how research progress from these special congressional initiatives fits within the continuum of diabetes research, and how these funds have contributed to the field of type 1 diabetes research and NIH efforts to combat this challenging health problem. Information from this study will aid in evaluation of the process by which the research goals for use of the special type 1 diabetes funds have been developed and are being pursued. Responses already collected from this survey were analyzed as part of an interim program assessment that was published by the NIDDK in April, 2003 *http://www.niddk.nih.gov/federal/planning/type 1_specialfund/.* This revised survey will contribute to a statutorily mandated report, due to the Congress on January 1, 2007, evaluating the process and efforts under this program and assessing research initiatives funded by these Act of Congress. *Frequency of Response:* The survey will require a one time response; though, respondents may be contacted again in the event of future congressionally mandated reports on the use of the special type 1 diabetes research funds. *Affected Public:* Research scientists who received the special funds about which the Congress has mandated in law the requirements for an evaluation report. *Type of Respondents:* Laboratory and clinical investigators who have received support from the special type 1 diabetes funds provided under the laws previously cited. The annual reporting burden is as follows: *Estimated number of respondents:* 500; *Estimated Number of Responses per Respondent:* 1; *Average Burden Hours per Response:* 1; and *Estimated Total Burden Hours Requested:* 500. The annualized total cost to respondents is estimated at: $25,000. It is expected that the respondents will be contacted and will return their responses via electronic mail. These measures will reduce the burden on the respondents and the overall costs of administering the study. Respondents will be asked to answer no more than sixteen questions, one-third of which will be answered with ''yes'' or ''no'' or a one-word response. There are no Capital Costs, Operating Costs or Maintenance Costs to report.

Request For Comments

Written comments and/or suggestions from the public and affected agencies are invited on one or more of the following points: (1) Whether the proposed collection of information is necessary for the proper performance of the function of the agency, including whether the information will have practical utility; (2) The accuracy of the agency's estimate of the burden of the proposed collection of information, including the validity of the methodology and assumptions sued; (3) Ways to enhance the quality, utility, and clarity of the information to be collected; and (4) Ways to minimize the burden of the collection of information on those who are to respond, including the use of appropriate automated, electronic, mechanical, or other technological collection techniques or other forms of information technology.

Direct Comments to OMB

Written comments and/or suggestions regarding the item(s) contained in this notice, especially regarding the estimated public burden and associated response time, should be directed to the: Office of Management and Budget, Office of Regulatory Affairs, New Executive Office Building, Room 10235, Washington, DC 20503, Attention: Desk Officer for NIH. To request more information on the proposed project or to obtain a copy of the data collection plans and instruments, contact: Dr. Shefa Gordon, Presidential Management Fellow, Office of Scientific Program and Policy analysis, NIDDK, NIH, Building 31, Room 9A31, 9000 Rockville Pike, Bethesda, MD 20892, or call non-toll-free number (301) 496–6623 or e-mail your request, including your address, to: *gordonshefa@mail.nih.gov.*

Comments Due Date

Comments regarding this information collection are best assured of having their full effect if received within 30 days of the date of this publication.

Dated: October 19, 2005.

Barbara Merchant,

Executive Officer, NIDDK.

[FR Doc. 05–21649 Filed 10–31–05; 8:45 am]

BILLING CODE 4140–01—M

DEPARTMENT OF HEALTH AND HUMAN SERVICES

National Institutes of Health

Office of Biotechnology Activities, Office of Science Policy, Office of the Director; Notice of Meeting

Pursuant to section 10(a) of the Federal Advisory Committee Act, as amended (5 U.S.C. Appendix 2), notice is hereby given of the second meeting of the National Science Advisory Board for Biosecurity (NSABB).

Under authority 42 U.S.C. 217a, Section 222 of the Public Health Service Act, as amended, the Department of Health and Human Services established NSABB to provide advice, guidance and leadership regarding federal oversight of dual-use research, defined as biological research with legitimate scientific purposes that could be misused to pose a biological threat to public health and/or national security.

The meeting will be open to the public, however, pre-registration is strongly recommended due to space limitations. Persons planning to attend should register online at *http://www.biosecurityboard.gov/meetings.asp* or by calling The Hill Group (Contact: A.J. Bownas) at 301–897–2789, ext. 100. Individuals who plan to attend and need special assistance, such as sign language interpretation or other reasonable accommodations, should indicate these requirements upon registration.

Name of Committee: National Science Advisory Board for Biosecurity.

Date: November 21, 2005.

Open: 9 a.m. to 6 p.m.

Agenda: Presentations and discussions regarding: (1) Criteria for defining dual-use research in the life sciences; (2) the role of a code of conduct for the life sciences; (3) communication of dual use research; (4) international perspectives on dual use research; (5) public comments; and (6) and other business of the Board.

Place: The National Institutes of Health, Building 31, 6C—Room 10, Bethesda, Maryland.

Contact Person: Allison Chamberlain, NSABB Program Assistant, 6705 Rockledge Drive, Bethesda, Maryland 20892, (301) 402–3090.

This meeting will also be webcast. The draft meeting agenda and other information about NSABB, including information about access to the webcast and pre-registration, will be available at *http://www.biosecurityboard.gov/meetings.asp.*

Any member of the public interested in presenting oral comments at the meeting may notify the Contact Person listed on this notice at least 10 days in advance of the meeting. Interested individuals and representatives of an organization may submit a letter of intent, a brief description of the organization

represented and a short description of the oral presentation. Only one representative of an organization may be allowed to present oral comments. Both printed and electronic copies are requested for the record. In addition, any interested person may file written comments with the committee. All written comments must be received by November 7, 2005 and should be sent via e-mail to *nsabb@od.nih.gov* with ''NSABB Public Comment'' as the subject line or by regular mail to 6705 Rockledge Drive, Suite 750, Bethesda, MD 20892, Attention Allison Chamberlain. The statement should include the name, address, telephone number and, when applicable, the business or professional affiliation of the interested person:

Dated: October 20, 2005.

Anthony M. Coelho, Jr.,

Acting Director, Office of Federal Advisory Committee Policy.

[FR Doc. 05–21661 Filed 10–31–05; 8:45 am]

BILLING CODE 4140-01-M

DEPARTMENT OF HEALTH AND HUMAN SERVICES

National Institutes of Health

National Cancer Institute; Notice of Closed Meeting

Pursuant to section 10(d) of the Federal Advisory Committee Act, as amended (5 U.S.C. Appendix 2), notice is hereby given of the following meeting.

The meeting will be closed to the public in accordance with the provisions set forth in sections 552b(c)(4) and 552b(c)(6), Title 5 U.S.C., as amended. The grant applications and the discussions could disclose confidential trade secrets or commercial property such as patentable material, and personal information concerning individuals associated with the grant applications, the disclosure of which would constitute a clearly unwarranted invasion of personal privacy.

Name of Committee: National Cancer Institute Special Emphasis Panel. RFA: CA06–502 ''AIDS Malignancy Clinical Trials Consortium.''

Date: November 30, 2005.

Time: 8 a.m. to 5 p.m.

Agenda: To review and evaluate grant applications.

Place: Ramada Inn Rockville, 1775 Rockville Pike, Rockville, MD 20852.

Contact Person: Joyce C. Pegues, PhD., Scientific Review Administrator, Special Review and Logistics Branch, Division of Extramural Activities, National Cancer Institute, 6116 Executive Blvd. 7149, Bethesda, MD 20892. 301/594–1286. *peguesj@mail.nih.gov.*

(Catalogue of Federal Domestic Assistance Program Nos. 93.392, Cancer Construction; 93.393, Cancer Cause and Prevention Research; 93.394, Cancer Detection and Diagnosis Research; 93.395, Cancer Treatment Research; 93.396, Cancer Biology Research; 93.397, Cancer Centers Support; 93.398, Cancer Research Manpower; 93.399, Cancer Control, National Institutes of Health, HHS)

Dated: October 20, 2005.

Anthony M. Coelho, Jr.,

Acting Director, Office of Federal Advisory Committee Policy.

[FR Doc. 05–21646 Filed 10–31–05; 8:45 am]

BILLING CODE 4140–01–M

DEPARTMENT OF HEALTH AND HUMAN SERVICES

National Institutes of Health

National Heart, Lung, and Blood Institute; Notice of Closed Meetings

Pursuant to section 10(d) of the Federal Advisory Committee Act, as amended (5 U.S.C. Appendix 2), notice is hereby given of the following meetings.

The meetings will be closed to the public in accordance with the provisions set forth in sections 552b(c)(4) and 552b(c)(6), Title 5 U.S.C., as amended. The grant applications and the discussions could disclose confidential trade secrets or commercial property such as patentable material, and personal information concerning individuals associated with the grant applications, the disclosure of which would constitute a clearly unwarranted invasion of personal privacy.

Name of Committee: National Heart, Lung, and Blood Institute Special Emphasis Panel Review of Research Project (R01) Applications

Date: November 30, 2005.

Time: 8 a.m. to 5 p.m.

Agenda: To review and evaluate grant applications.

Place: Loews Annapolis Hotel, 126 West Street, Annapolis, MD 21401.

Contact Person: Katherine M. Malinda, PhD, Scientific Review Administrator, Review Branch, Division of Extramural Affairs, National Heart, Lung, and Blood Institute, National Institutes of Health, 6701 Rockledge Drive, Room 7198, Bethesda, MD 20892, 301/435–0297.

Name of Committee: National Heart, Lung, and Blood Institute Special Emphasis Panel Review of Research Project (RO1) Applications

Date: November 30, 2005.

Time: 2 p.m. to 5 p.m.

Agenda: To review and evaluate grant applications.

Place: National Institutes of Health, Building 31, 31 Center Drive, Bethesda, MD 20892, (Telephone Conference Call).

Contact Person: Patricia A. Haggerty, PhD, Scientific Review Administrator, National Heart, Lung, and Blood Institute/NIH, Clinical Studies & Training Studies Rev. Grp., Division of Extramural Affairs/Section Chief, 6701 Rockledge Drive, Room 7194, Bethesda, MD 20892, 301/435–0288.

(Catalogue of Federal Domestic Assistance Program Nos. 93.233, National Center for Sleep Disorders Research; 93.837, Heart and Vascular Diseases Research; 93.838, Lung Diseases Research; 93.839, Blood Diseases and Resources Research, National Institutes of Health, HHS)

Dated: October 20, 2005.

Anthony M. Coelho, Jr.,

Acting Director, Office of Federal Advisory Committee Policy.

[FR Doc. 05–21656 Filed 10–31–05; 8:45 am]

BILLING CODE 4140–01–M

DEPARTMENT OF HEALTH AND HUMAN SERVICES

National Institutes of Health

National Heart, Lung, and Blood Institute; Notice of Meeting

Pursuant to section 10(a) of the Federal Advisory Committee Act, as amended (5 U.S.C. Appendix 2), notice is hereby given of a meeting of the Sleep Disorders Research Advisory Board.

The meeting will be open to the public, with attendance limited to space available. Individuals who plan to attend and need special assistance, such as sign language interpretation or other reasonable accommodations, should notify the Contact Person listed below in advance of the meeting:

Name of Committee: Sleep Disorders Research Advisory Board.

Date: December 6, 2005.

Time: 8:30 a.m. to 5 p.m.

Agenda: To discuss sleep research and education priorities and programs.

Place: National Institutes of Health, Natcher Building, Conference Room D, Bethesda, MD 20892.

Contact Person: Carl E Hunt, MD, Director, National Center on Sleep Disorders Research, National Heart, Lung, and Blood Institute, National Institutes of Health, 6705 Rockledge Drive, Room 6022, Bethesda, MD 20892, 301/435–0199.

Any interested person may file written comments with the committee by forwarding the statement to the Contact Person listed on this notice. This statement should include the name, address, telephone number and when applicable, the business or professional affiliation of the interested person.

In the interest of security, NIH has instituted stringent procedures for entrance into the building by non-governmental employees. Persons without a government I.D. will need to show a photo I.D. and sign-in at the security desk upon entering the building.

Information is also available on the Institute's/Center's home page: *http://www.nhlbi.nih.gov/meetings/index.htm,* where an agenda and any additional

information for the meeting will be posted when available.

(Catalogue of Federal Domestic Assistance Program Nos. 93.233, National Center for Sleep Disorders Research; 93.837, Heart and Vascular Diseases Research; 93.838, Lung Diseases Research; 93.839, Blood Diseases and Resources Research, National Institutes of Health, HHS)

Dated: October 20, 2005.

Anthony M. Coelho, Jr.,

Acting Director, Office of Federal Advisory Committee Policy.

[FR Doc. 05–21657 Filed 10–31–05; 8:45 am]

BILLING CODE 4140–01–M

DEPARTMENT OF HEALTH AND HUMAN SERVICES

National Institutes of Health

National Human Genome Research Institute; Notice of Meeting

Pursuant to section 10(d) of the Federal Advisory Committee Act, as amended (5 U.S.C. Appendix 2), notice is hereby given of a meeting of the Board of Scientific Counselors, National Human Genome Research Institute.

The meeting will be open to the public as indicated below, with attendance limited to space available. Individuals who plan to attend and need special assistance, such as sign language interpretation or other reasonable accommodations, should notify the Contact Person listed below in advance of the meeting.

The meeting will be closed to the public in accordance with the provisions set forth in section 552b(c)(6), Title 5 U.S.C., as amended for the review, discussion, and evaluation of individual intramural programs and projects conducted by the National Human Genome Research Institute, including consideration of personnel qualifications and performance, and the competence of individual investigators, the disclosure of which would constitute a clearly unwarranted invasion of personal privacy.

Name of Committee: Board of Scientific Counselors, National Human Genome Research Institute.

Date: November 6–8, 2005.

Open: November 6, 2005, 6:30 p.m. to 8 p.m.

Agenda: To discuss matters of program relevance.

Place: Eisenhower Inn and Conference Center, 2634 Emmittsburg Road, Gettysburg, PA 17325.

Closed: November 6, 2005, 8 p.m. to Adjournment on November 8, 2005.

Agenda: To review and evaluate personnel qualifications and performance, and competence of individual investigators.

Place: Eisenhower Inn and Conference Center, 2634 Emmittsburg Road, Gettysburg, PA 17325.

Contact Person: Claire Kelso, Intramural Program Specialist, Division of Intramural Research, Office of the Director, National Human Genome Research Institute, 50 South Drive, Building 50, Room 5222, Bethesda, MD 20892–8002, (301) 435–5802.

(Catalogue of Federal Domestic Assistance Program No. 93.172, Human Genome Research, National Institutes of Health, HHS)

Dated: October 20, 2005.

Anthony M. Coelho, Jr.,

Acting Director, Office of Federal Advisory Committee Policy.

[FR Doc. 05–21666 Filed 10–31–05; 8:45 am]

BILLING CODE 4140–01–M

DEPARTMENT OF HEALTH AND HUMAN SERVICES

National Institutes of Health

National Institute of Environmental Health Sciences; Notice of Closed Meeting

Pursuant to section 10(d) of the Federal Advisory Committee Act, as amended (5 U.S.C. Appendix 2), notice is hereby given of the following meeting.

The meeting will be closed to the public in accordance with the provisions set forth in sections 552b(c)(4) and 552b(c)(6), Title 5 U.S.C., as amended. The grant applications and the discussions could disclose confidential trade secrets or commercial property such as patentable material, and personal information concerning individuals associated with the grant applications, the disclosure of which would constitute a clearly unwarranted invasion of personal privacy.

Name of Committee: Environmental Health Sciences Review Committee.

Date: November 9–10, 2005.

Time: 8:30 a.m. to 6 p.m.

Agenda: To review and evaluate grant applications.

Place: Hawthorne Suites Hotel, 300 Meredith Drive, Research Triangle Park, NC 27713.

Contact Person: Linda K. Bass, PhD, Scientific Review Administrator, Nat'l Institute of Environmental Health Sciences, P.O. Box 12233, MD EC–24, Research Triangle Park, NC 27709, (919) 541–1307.

This notice is being published less than 15 days prior to the meeting due to the timing limitations imposed by the review and funding cycle.

(Catalogue of Federal Domestic Assistance Program Nos. 93.115, Biometry and Risk Estimation—Health Risks from Environmental Exposures; 93.142, NIEHS Hazardous Waste Worker Health and Safety Training; 93.143, NIEHS Superfund Hazardous Substances—Basic Research and Education; 93.894, Resources and Manpower Development in the Environmental Health Sciences; 93.113, Biological Response to Environmental Health Hazards; 93.114, Applied Toxicological Research and Testing, National Institutes of Health, HHS)

Dated: October 24, 2005.

Anthony M. Coelho, Jr.,

Acting Director, Office of Federal Advisory Committee Policy.

[FR Doc. 05–21647 Filed 10–31–05; 8:45 am]

BILLING CODE 4140–01–M

DEPARTMENT OF HEALTH AND HUMAN SERVICES

National Institutes of Health

National Institute of Mental Health; Notice of Closed Meetings

Pursuant to section 10(d) of the Federal Advisory Committee Act, as amended (5 U.S.C. Appendix 2), notice is hereby given of the following meetings.

The meetings will be closed to the public in accordance with the provisions set forth in sections 552b(c)(4) and 552b(c)(6), Title 5 U.S.C., as amended. The grant applications and the discussions could disclose confidential trade secrets or commercial property such as patentable material, and personal information concerning individuals associated with the grant applications, the disclosure of which would constitute a clearly unwarranted invasion of personal privacy.

Name of Committee: National Institute of Mental Health Special Emphasis Panel, Bipolar Disorder Psychobiology.

Date: November 11, 2005.

Time: 2 p.m. to 4 p.m.

Agenda: To review and evaluate grant applications.

Place: National Institutes of Health, Neuroscience Center, 6001 Executive Boulevard, Rockville, MD 20852 (Telephone Conference Call).

Contact Person: Christopher S Sarampote, PhD, Scientific Review Administrator, Division of Extramural Activities, National Institute of Mental Health, NIH, Neuroscience Center, 6001 Executive Blvd., Room 6148, MSC 9608, Bethesda, MD 20892–9608, 301–443–1959, *csarampo@mail.nih.gov.*

Name of Committee: National Institute of Mental Health Special Emphasis Panel, ASCEND Collaborative R01s.

Date: November 17, 2005.

Time: 12 p.m. to 2 p.m.

Agenda: To review and evaluate grant applications.

Place: National Institutes of Health, Neuroscience Center, 6001 Executive Boulevard, Rockville, MD 20852 (Telephone Conference Call).

Contact Person: Tracy Waldeck, PhD, Scientific Review Administrator, Division of

Extramural Activities, National Institutes of Health, NIH, Neuroscience Center, 6001 Executive Blvd., Room 6132, MSC 9608, Bethesda, MD 20852–9609, 301/443–0322, *waldeckt@mail.nih.gov.*

(Catalogue of Federal Domestic Assistance Program Nos. 93.242, Mental Health Research Grants; 93.281, Scientist Development Award, Scientist Development Award for Clinicians, and Research Scientist Award; 93.282, Mental Health National Research Service Awards for Research Training, National Institutes of Health, HHS)

Dated: October 20, 2005.

Anthony M. Coelho, Jr.,

Acting Director, Office of Federal Advisory Committee Policy.

[FR Doc. 05–21652 Filed 10–31–05; 8:45 am]

BILLING CODE 4140–01–M

DEPARTMENT OF HEALTH AND HUMAN SERVICES

National Institutes of Health

National Institute of Mental Health; Notice of Closed Meeting

Pursuant to section 10(d) of the Federal Advisory Committee Act, as amended (5 U.S.C. Appendix 2), notice is hereby given of the following meeting.

The meeting will be closed to the public in accordance with the provisions set forth in sections 552b(c)(4) and 552b(c)(6), Title 5 U.S.C., as amended. The grant applications and the discussions could disclose confidential trade secrets or commerical property such as patentable material, and personal information concerning individuals associated with the grant applications, the disclosure of which would constitute a clearly unwarranted invasion of personal privacy.

Name of Committee: National Institute of Mental Health Special Emphasis Panel PTSD Application.

Date: October 27, 2005.

Time: 1 p.m. to 4 p.m.

Agenda: To review and evaluate grant applications.

Place: National Institutes of Health, Neuroscience Center, 6001 Executive Boulevard, Rockville, MD 20852, (Telephone Conference Call).

Contact Person: David I. Sommers, PhD, Scientific Review Administrator, Division of Extramural Activities, National Institute of Mental Health, NIH, Neuroscience Center, 6001 Executive Blvd., Room 6144, MSC 9606, Bethesda, MD 20892–9606, 301–443–7861, *dsommers@mail.nih.gov.*

This notice is being published less than 15 days prior to the meeting due to the timing limitations imposed by the review and funding cycle.

(Catalogue of Federal Domestic Assistance Program Nos. 93.242, Mental Health Research Grants; 93.281, Scientist Development Award, Scientist Development Award for Clinicians, and Research Scientist Award; 93.282, Mental Health National Research Service Awards for Research Training, National Institutes of Health, HHS)

Dated: October 20, 2005.

Anthony M. Coelho, Jr.,

Acting Director, Office of Federal Advisory Committee Policy.

[FR Doc. 05–21653 Filed 10–31–05; 8:45am]

BILLING CODE 4140–01–M

DEPARTMENT OF HEALTH AND HUMAN SERVICES

National Institutes of Health

National Institute of Child Health and Human Development; Notice of Closed Meeting

Pursuant to section 10(d) of the Federal Advisory Committee Act, as amended (5 U.S.C. Appendix 2), notice is hereby given of the following meeting.

The meeting will be closed to the public in accordance with the provisions set forth in section 552b(c)(4) and 552b(c)(6), Title 5 U.S.C., as amended. The grant applications and the discussions could disclose confidential trade secrets or commercial property such as patentable material, and personal information concerning individuals associated with the grant applications, the disclosure of which would constitute a clearly unwarranted invasion of personal privacy.

Name of Committee: National Institute of Child Health and Human Development Special Emphasis Panel Maternal Lifestyle Study—Phase 5.

Date: November 10, 2005.

Time: 9 a.m. to 5 p.m.

Agenda: To review and evaluate grant applications.

Place: Hotel Lombardy, 2019 Pennsylvania Avenue, NW., Washington, DC 20006.

Contact Person: Marita R. Hopmann, PhD, Scientific Review Administrator, Division of Scientific Review, National Institute of Child Health and Human Development, 6100 Building, Room 5B01, Bethesda, MD 20892, (301) 435–6911, *hopmannm@mail.nih.gov.*

This notice is being published less than 15 days prior to the meeting due to the timing limitations imposed by the review and funding cycle.

(Catalogue of Federal Domestic Assistance Program Nos. 93.864, Population Research; 93.865, Research for Mothers and Children; 93.929, Center for Medical Rehabilitation Research; 93.209, Contraception and Infertility Loan Repayment Program, National Institutes of Health, HHS)

Dated: October 20, 2005.

Anthony M. Coelho, Jr.,

Acting Director, Office of Federal Advisory Committee Policy.

[FR Doc. 05–21654 Filed 10–31–05; 8:45 am]

BILLING CODE 4140–01–M

DEPARTMENT OF HEALTH AND HUMAN SERVICES

National Institutes of Health

National Institute of Environmental Health Sciences; Notice of Closed Meeting

Pursuant to section 10(d) of the Federal Advisory Committee Act, as amended (5 U.S.C. Appendix 2), notice is hereby given of the following meeting.

The meeting will be closed to the public in accordance with the provisions set forth in sections 552b(c)(4) and 552b(c)(6), Title 5 U.S.C., as amended. The grant applications and the discussions could disclose confidential trade secrets or commercial property such as patentable material, and personal information concerning individuals associated with the grant applications, the disclosure of which would constitute a clearly unwarranted invasion of personal privacy.

Name of Committee: National Institute of Environmental Health Sciences Special Emphasis Panel, Review of (R42s, R43s and R44s).

Date: November 30, 2005.

Time: 8:30 a.m. to 5 p.m.

Agenda: To review and evaluate grant applications.

Place: Nat. Inst. of Environmental Health Sciences, Building 101, Rodbell Auditorium, 111 T.W. Alexander Drive, Research Triangle Park, NC 27709.

Contact Person: Sally Eckert-Tilotta, PhD, Scientific Review Administrator, National Inst. of Environmental Health Sciences, Office of Program Operations, Scientific Review Branch, P.O. Box 12233, Research Triangle Park, NC 27709, 919/541–1446, *eckertt1@niehs.nih.gov.*

(Catalogue of Federal Domestic Assistance Program Nos. 93.115, Biometry and Risk Estimation—Health Risks from Environmental Exposures; 93.142, NIEHS Hazardous Waste Worker Health and Safety Training; 93.143, NIEHS Superfund Hazardous Substances—Basic Research and Education; 93.894, Resources and Manpower Development in the Environmental Health Sciences; 93.113, Biological Response to Environmental Health Hazards; 93.114, Applied Toxicological Research and Testing, National Institutes of Health, HHS)

Dated: October 20, 2005.

Anthony M. Coelho, Jr.,

Acting Director, Office of Federal Advisory Committee Policy.

[FR Doc. 05–21662 Filed 10–31–05; 8:45 am]

BILLING CODE 4140–01–M

DEPARTMENT OF HEALTH AND HUMAN SERVICES

National Institutes of Health

National Institute of General Medical Sciences; Notice of Closed Meeting

Pursuant to section 10(d) of the Federal Advisory Committee Act, as amended (5 U.S.C. Appendix 2), notice is hereby given of the following meeting.

The meeting will be closed to the public in accordance with the provisions set forth in section 552b(c)(4) and 552b(c)(6), Title 5 U.S.C., as amended. The grant applications and the discussions could disclose confidential trade secrets or commercial property such as patentable material, and personal information concerning individuals associated with the grant applications, the disclosure of which would constitute a clearly unwarranted invasion of personal privacy.

Name of Committee: Minority Programs Review Committee, MBRS Review Subcommittee B.

Date: November 14, 2005.

Time: 8:30 a.m. to 5 p.m.

Agenda: To review and evaluate grant applications.

Place: Holiday Inn Select Bethesda, 8120 Wisconsin Ave., Bethesda, MD 20814.

Contact Person: Rebecca H Johnson, PhD, Office of Scientific Review, National Institute of General Medical Sciences, National Institutes of Health, Natcher Building, Room 3AN18C, Bethesda, MD 20892, 301–594–2771, *johnsonrh@nigms.nih.gov*.

(Catalogue of Federal Domestic Assistance Program Nos. 93.375, Minority Biomedical Research Support; 93.821, Cell Biology and Biophysics Research; 93.859, Pharmacology, Physiology, and Biological Chemistry Research; 93.862, Genetics and Developmental Biology Research; 93.88, Minority Access to Research Careers; 93.96, Special Minority Initiatives, National Institutes of Health, HHS)

Dated: October 20, 2005.

Anthony J. Coelho, Jr.,

Acting Director, Office of Federal Advisory Committee Policy.

[FR Doc. 05–21663 Filed 10–31–05; 8:45 am]

BILLING CODE 4140–01–M

DEPARTMENT OF HEALTH AND HUMAN SERVICES

National Institutes of Health

National Institute of Arthritis and Musculoskeletal and Skin Diseases; Notice of Closed Meeting

Pursuant to section 10(d) of the Federal Advisory Committee Act, as amended (5 U.S.C. Appendix 2), notice is hereby given of the following meeting.

The meeting will be closed to the public in accordance with the provisions set forth in sections 552b(c)(4) and 552b(c)(6), Title 5 U.S.C., as amended. The grant applications and the discussions could disclose confidential trade secrets or commercial property such as patentable material, and personal information concerning individuals associated with the grant applications, the disclosure of which would constitute a clearly unwarranted invasion of personal privacy.

Name of Committee: National Institute of Arthritis and Musculoskeletal and Skin Diseases Special Emphasis Panel. Review of Research Program Projects (P01s).

Date: November 22, 2005.

Time: 9 a.m. to 5 p.m.

Agenda: To review and evaluate grant applications.

Place: NIAMS Institute, One Democracy Plaza, 6701 Democracy, Suite 800, Bethesda, MD 20892.

Contact Person: Yan Z Wang, PhD, MD, Scientific Review Administrator, National Institute of Arthritis and Musculoskeletal and Skin Diseases, 6701 Democracy Blvd., Suite 820, Bethesda, MD 20892, (301) 594–4957, *wangy1@mail.nih.gov*.

(Catalogue of Federal Domestic Assistance Program Nos. 93.846, Arthritis, Musculoskeletal and Skin Diseases Research, National Institutes of Health, HHS)

Dated: October 20, 2005.

Anthony M. Coelho, Jr.,

Acting Director, Office of Federal Advisory Committee Policy.

[FR Doc. 05–21664 Filed 10–31–05; 8:45 am]

BILLING CODE 4140–01–M

DEPARTMENT OF HEALTH AND HUMAN SERVICES

National Institutes of Health

National Institute of Arthritis and Musculoskeletal and Skin Diseases; Notice of Closed Meeting

Pursuant to section 10(d) of the Federal Advisory Committee Act, as amended (5 U.S.C. Appendix 2), notice is hereby given of the following meeting.

The meeting will be closed to the public in accordance with the provisions set forth in sections 552b(c)(4) and 552b(c)(6), Title 5 U.S.C., as amended. The grant applications and the discussions could disclose confidential trade secrets or commercial property such as patentable material, and personal information concerning individuals associated with the grant applications, the disclosure of which would constitute a clearly unwarranted invasion of personal privacy.

Name of Committee: National Institute of Arthritis and Musculoskeletal and Skin Diseases Special Emphasis Panel. Review of Institutional National Research Service Award (T32).

Date: November 4, 2005.

Time: 1:30 p.m. to 3 p.m.

Agenda: To review and evaluate grant applications.

Place: NIAMS Institute, NIH, One Democracy Plaza, 6701 Democracy Blvd, Bethesda, MD 20892, (Telephone Conference Call).

Contact Person: Eric H. Brown, PhD, Scientific Review Administrator, National Institute of Arthritis, Musculoskeletal & Skin Diseases, National Institutes of Health, 6701 Democracy Blvd, Room 824, MSC 4872, Bethesda MD 20892–4872, (301) 594–4955, *browneri@mail.nih.gov*.

This notice is being published less than 15 days prior to the meeting due to the timing limitations imposed by the review and funding cycle.

(Catalogue of Federal Domestic Assistance Program Nos. 93.846, Arthritis, Musculoskeletal and Skin Diseases Research, National Institutes of Health, HHS)

Dated: October 20, 2005.

Anthony M. Coelho, Jr.,

Acting Director, Office of Federal Advisory Committee Policy.

[FR Doc. 05–21665 Filed 10–31–05; 8:45 am]

BILLING CODE 4140–01–M

DEPARTMENT OF HEALTH AND HUMAN SERVICES

National Institutes of Health

National Institute of Neurological Disorders and Stroke; Notice of Closed Meetings

Pursuant to section 10(d) of the Federal Advisory Committee Act, as amended (5 U.S.C. Appendix 2), notice is hereby given of the following meetings.

The meetings will be closed to the public in accordance with the provisions set forth in sections 552b(c)(4) and 552b(c)(6), Title 5 U.S.C., as amended. The grant applications and the discussions could disclose confidential trade secrets or commercial property such as patentable material,

and personal information concerning individuals associated with the grant applications, the disclosure of which would constitute a clearly unwarranted invasion of personal privacy.

Name of Committee: National Institute of Neurological Disorders and Stroke Special Emphasis Panel Training and Career Development.

Date: October 25, 2005.

Time: 2 p.m. to 6 p.m.

Agenda: To review and evaluate grant applications.

Place: National Institutes of Health, Neuroscience Center, 6001 Executive Boulevard, Rockville, MD 20852, (Telephone Conference Call).

Contact Person: Raul A Saavedra, PhD, Scientific Review Administrator, Scientific Review Branch, Division of Extramural Research, NINDS/NIH/DHHS, NSC; 6001 Executive Blvd., Ste. 3208, Bethesda, MD 20892–9529, 301–496–9223, *saavedrr@ninds.nih.gov.*

This notice is being published less than 15 days prior to the meeting due to the timing limitations imposed by the review and funding cycle.

Name of Committee: National Institute of Neurological Disorders and Stroke Special Emphasis Panel R25 Workshop Review.

Date: October 26, 2005.

Time: 10 a.m. to 12 p.m.

Agenda: To review and evaluate grant applications.

Place: National Institutes of Health, Neuroscience Center, 6001 Executive Boulevard, Rockville, MD 20852, (Telephone Conference Call).

Contact Person: Joann McConnell, PhD, Scientific Review Administrator, Scientific Review Branch, NIH/NINDS/Neuroscience Center, 6001 Executive Blvd., Suite 3208, Msc 9529, Bethesda, MD 20892–9529, (301) 496–5324, *mcconnej@ninds.nih.gov.*

This notice is being published less than 15 days prior to the meeting due to the timing limitations imposed by the review and funding cycle.

(Catalogue of Federal Domestic Assistance Program Nos. 93.853, Clinical Research Related to Neurological Disorders; 93.854, Biological Basis Research in the Neurosciences, National Institutes of Health, HHS)

Dated: October 20, 2005.

Anthony M. Coelho, Jr.,

Acting Director, Office of Federal Advisory Committee Policy.

[FR Doc. 05–21668 Filed 10–31–05; 8:45 am]

BILLING CODE 4140–01–M

DEPARTMENT OF HEALTH AND HUMAN SERVICES

National Institutes of Health

National Institute of Neurological Disorders and Stroke; Notice of Closed Meetings

Pursuant to section 10(d) of the Federal Advisory Committee Act, as amended (5 U.S.C. Appendix 2), notice is hereby given of the following meetings.

The meetings will be closed to the public in accordance with the provisions set forth in sections 552b(c)(4) and 552b(c)(6), Title 5 U.S.C., as amended. The grant applications and the discussions could disclose confidential trade secrets or commercial property such as patentable material, and personal information concerning individuals associated with the grant applications, the disclosure of which would constitute a clearly unwarranted invasion of personal privacy.

Name of Committee: National Institute of Neurological Disorders and Stroke Special Emphasis Panel, Specialized Neuroscience Research Program Review.

Date: November 7–8, 2005.

Time: 8 a.m. to 1 p.m.

Agenda: To review and evaluate grant applications.

Place: A Wyndham Historic Hotel—Union Station, 1001 Broadway, Nashville, TN 37203.

Contact Person: Phillip F. Wiethorn, Scientific Review Administrator, DHHS/NIH/NINDS/DER/SRB, 6001 Executive Boulevard; MSC 9529, Neuroscience Center; Room 3203, Bethesda, MD 20892–9529, (301) 496–5388, *wiethorp@ninds.nih.gov.*

This notice is being published less than 15 days prior to the meeting due to the timing limitations imposed by the review and funding cycle.

Name of Committee: National Institute of Neurological Disorders and Stroke Special Emphasis Panel, Mechanisms and Treatment of Epilepsy.

Date: November 7, 2005.

Time: 2 p.m. to 4 p.m.

Agenda: To review and evaluate grant applications.

Place: National Institutes of Health, Neuroscience Center, 6001 Executive Boulevard, Rockville, MD 20852, (Telephone Conference Call).

Contact Person: Shantadurga Rajaram, PhD, Scientific Review Administrator, Scientific Review Branch, NIH/NINDS/Neuroscience Center, 6001 Executive Blvd., Suite 3208, Msc 9529, Bethesda, MD 20852, (301) 435–6033, *rajarams@mail.nih.gov.*

This notice is being published less than 15 days prior to the meeting due to the timing limitations imposed by the review and funding cycle.

(Catalogue of Federal Domestic Assistance Program Nos. 93.853, Clinical Research Related to Neurological Disorders; 93.854, Biological Basis Research in the Neurosciences, National Institutes of Health, HHS)

Dated: October 20, 2005.

Anthony M. Coelho, Jr.,

Acting Director, Office of Federal Advisory Committee Policy.

[FR Doc. 05–21669 Filed 10–31–05; 8:45 am]

BILLING CODE 4140–01–M

DEPARTMENT OF HEALTH AND HUMAN SERVICES

National Institutes of Health

National Institute of Diabetes and Digestive and Kidney Diseases; Notice of Closed Meetings

Pursuant to section 10(d) of the Federal Advisory Committee Act, as amended (5 U.S.C. Appendix 2), notice is hereby given of the following meetings.

The meetings will be closed to the public in accordance with the provisions set forth in sections 552b(c)(4) and 552b(c)(6), Title 5 U.S.C., as amended. The grant applications and the discussions could disclose confidential trade secrets or commercial property such as patentable material, and personal information concerning individuals associated with the grant applications, the disclosure of which would constitute a clearly unwarranted invasion of personal privacy.

Name of Committee: National Institute of Diabetes and Digestive and Kidney Diseases Special Emphasis Panel.

Date: November 21, 2005.

Time: 9:30 a.m.to 2:30 p.m.

Agenda: To review and evaluate grant applications.

Place: National Institutes of Health, Two Democracy Plaza, 6707 Democracy Boulevard, Bethesda, MD 20892, (Telephone Conference Call).

Contact Person: Michael W. Edwards, PhD, Scientific Review Administrator, Review Branch, DEA NIDDK, National Institutes of Health, Room 750, 6707 Democracy Boulevard, Bethesda, MD 20892–5452. (301) 594–8886. *edwardsm@extra.niddk.nih.gov.*

Name of Committee: National Institute of Diabetes and Digestive and Kidney Diseases Special Emphasis Panel, Human Polycystic Kidney Disease.

Date: November 22, 2005.

Time: 12 p.m. to 5 p.m.

Agenda: To review and evaluate grant applications.

Place: National Institutes of Health, Two Democracy Plaza, 6707 Democracy Boulevard, Bethesda, MD 20892, (Telephone Conference Call).

Contact Person: Michael W. Edwards, PhD, Scientific Review Administrator, Review Branch, DEA NIDDK, National Institutes of Health, Room 750, 6707 Democracy Boulevard, Bethesda, MD 20892–5452. (301) 594–8886. *edwardsm@extra.niddk.nih.gov.*

Name of Committee: National Institute of Diabetes and Digestive and Kidney Diseases Special Emphasis Panel, Human SLE Nephritis.

Date: November 28, 2005.

Time: 11 a.m. to 4 p.m.

Agenda: To review and evaluate grant applications.

Place: National Institutes of Health, Two Democracy Plaza, 6707 Democracy Boulevard, Bethesda, MD 20892. (Telephone Conference Call).

Contact Person: Michael W. Edwards, PhD, Scientific Review Administrator, Review Branch, DEA, NIDDK, National Institutes of Health, Room 750, 6707 Democracy Boulevard, Bethesda, MD 20892–5452. (301) 594–8886. *edwardsm@extra.niddk.nih.gov.*

Name of Committee: National Institute of Diabetes and Digestive and Kidney Diseases Special Emphasis Panel; Pathogenic T Cells.

Date: November 30, 2005.

Time: 2 p.m. to 3:30 p.m.

Agenda: To review and evaluate grant applications.

Place: National Institutes of Health, Two Democracy Plaza, 6707 Democracy Boulevard, Bethesda, MD 20892. (Telephone Conference Call).

Contact Person: Michele L. Barnard, PhD, Scientific Review Administrator, Review Branch, DEA, NIDDK, National Institutes of Health, Room 753, 6707 Democracy Boulevard, Bethesda, MD 20892–5452. (301) 594–8898. *barnardm@extra.niddk.nih.gov.*

Name of Committee: National Institute of Diabetes and Digestive and Kidney Diseases Special Emphasis Panel, Cardiovascular Disease in CRI.

Date: December 1, 2005.

Time: 12 p.m. to 2 p.m.

Agenda: To review and evaluate grant applications.

Place: National Institutes of Health, Two Democracy Plaza, 6707 Democracy Boulevard, Bethesda, MD 20892. (Telephone Conference Call).

Contact Person: Michael W. Edwards, PhD, Scientific Review Administrator, Review Branch, DEA, NIDDK, National Institutes of Health, Room 750, 6707 Democracy Boulevard, Bethesda, MD 20892–5452. (301) 594–8886. *edwardsm@extra.niddk.nih.gov.*

(Catalogue of Federal Domestic Assistance Program Nos. 93.847, Diabetes, Endocrinology and Metabolic Research; 93.848, Digestive Diseases and Nutrition Research; 93.849, Kidney Diseases, Urology and Hematology Research, National Institutes of Health, HHS)

Dated: October 20, 2005.

Anthony M. Coelho, Jr.,

Acting Director, Office of Federal Advisory Committee Policy.

[FR Doc. 05–21673 Filed 10–31–05; 8:45 am]

BILLING CODE 4140–01–M

DEPARTMENT OF HEALTH AND HUMAN SERVICES

National Institutes of Health

Center for Scientific Review; Notice of Closed Meetings

Pursuant to Section 10(d) of the Federal Advisory Committee Act, as amended (5 U.S.C. Appendix 2), notice is hereby given of the following meetings.

The meetings will be closed to the public in accordance with the provisions set forth in sections 552b(c)(4) and 552b(c)(6), Title 5 U.S.C., as amended. The grant applications and the discussions could disclose confidential trade secrets or commercial property such as patentable material, and personal information concerning individuals associated with the grant applications, the disclosure of which would constitute a clearly unwarranted invasion of personal privacy.

Name of Committee: Center for Scientific Review Special Emphasis Panel Metabolic Systems and Proteomics.

Date: November 2, 2005.

Time: 1 p.m. to 2 p.m.

Agenda: To review and evaluate grant applications.

Place: National Institutes of Health, 6701 Rockledge Drive, Bethesda, MD 20892, (Telephone Conference Call).

Contact Person: Sally Ann Amero, PhD, Scientific Review Administrator, Center for Scientific Review, National Institutes of Health, 6701 Rockledge Drive, Room 4190, MSC 7849, Bethesda, MD 20892, 301–435–1159, *ameros@csr.nih.gov.*

This notice is being published less than 15 days prior to the meeting due to the timing limitations imposed by the review and funding cycle.

Name of Committee: Center for Scientific Review Special Emphasis Panel Social and Psychological Aspects of Addictions.

Date: November 3–4, 2005.

Time: 8:30 a.m. to 5 p.m.

Agenda: To review and evaluate grant applications.

Place: Beacon Hotel and Corporate Quarters, 1615 Rhode Island Avenue, NW., Washington, DC 20036.

Contact Person: Gayle M. Boyd, PhD, Scientific Review Administrator, Center for Scientific Review, National Institutes of Health, 6701 Rockledge Drive, Room 3028–D, MSC 7759, Bethesda, MD 20892, 301–451–9956, *gboyd@mail.nih.gov.*

This notice is being published less than 15 days prior to the meeting due to the timing limitations imposed by the review and funding cycle.

Name of Committee: Center for Scientific Review Special Emphasis Panel Initiation, Measurement and Cessation of Substance Use.

Date: November 3, 2005.

Time: 10 a.m. to 11:30 a.m.

Agenda: To review and evaluate grant applications.

Place: Beacon Hotel and Corporate Quarters, 1615 Rhode Island Avenue, NW., Washington, DC 20036.

Contact Person: Gayle M. Boyd, PhD, Scientific Review Administrator, Center for Scientific Review, National Institutes of Health, 6701 Rockledge Drive, Room 3028–D, MSC 7759, Bethesda, MD 20892, 301–451–9956, *gboyd@mail.nih.gov.*

This notice is being published less than 15 days prior to the meeting due to the timing limitations imposed by the review and funding cycle.

Name of Committee: Center for Scientific Review Special Emphasis Panel Prevention and Cessation of Substance Abuse.

Date: November 3, 2005.

Time: 11:30 a.m. to 3:00 p.m.

Agenda: To review and evaluate grant applications.

Place: Beacon Hotel and Corporate Quarters, 1615 Rhode Island Avenue, NW., Washington, DC 20036.

Contact Person: Gayle M. Boyd, PhD, Scientific Review Administrator, Center for Scientific Review, National Institutes of Health, 6701 Rockledge Drive, Room 3028–D, MSC 7759, Bethesda, MD 20892, 301–451–9956, *gboyd@mail.nih.gov.*

This notice is being published less than 15 days prior to the meeting due to the timing limitations imposed by the review and funding cycle.

Name of Committee: AIDS and Related Research Integrated Review Group, AIDS Discovery and Development of Therapeutics Study Section.

Date: November 7–8, 2005.

Time: 8 a.m. to 3:30 p.m.

Agenda: To review and evaluate grant applications.

Place: The River Inn, 924 25th Street, NW., Washington, DC 20037.

Contact Person: Eduardo A. Montalvo, PhD, Scientific Review Administrator, Center for Scientific Review, National Institutes of Health, 6701 Rockledge Drive, Room 5212, MSC 7852, Bethesda, MD 20892, (301) 435–1168, *montalve@csr.nih.gov.*

This notice is being published less than 15 days prior to the meeting due to the timing limitations imposed by the review and funding cycle.

Name of Committee: AIDS and Related Research Integrated Review Group, Behavioral and Social Consequences of HIV/AIDS Study Section.

Date: November 7–8, 2005.

Time: 8 a.m. to 5 p.m.

Agenda: To review and evaluate grant applications.

Place: The Watergate, 2650 Virginia Avenue, NW., Washington, DC 20037.

Contact Person: Mark P. Rubert, PhD, Scientific Review Administrator, Center for Scientific Review, National Institutes of Health, 6701 Rockledge Drive, Room 5218, MSC 7852, Bethesda, MD 20892, 301–435–1775, *rubertm@csr.nih.gov.*

This notice is being published less than 15 days prior to the meeting due to the timing limitations imposed by the review and funding cycle.

Name of Committee: Center for Scientific Review Special Emphasis Panel, Cancer Drug Development and Therapeutics (SBIR).

Date: November 7–8, 2005.
Time: 8 a.m. to 5 p.m.
Agenda: To review and evaluate grant applications.
Place: Embassy Suites at the Chevy Chase Pavilion, 4300 Military Road, NW., Washington, DC 20015.
Contact Person: Eva Petrakova, PhD, MPH, Scientific Review Administrator, Center for Scientific Review, National Institutes of Health, 6701 Rockledge Drive, Room 6158, MSC 7804, Bethesda, MD 20892, 301–435–1716, *petrakoe@mail.nih.gov.*
This notice is being published less than 15 days prior to the meeting due to the timing limitations imposed by the review and funding cycle.

Name of Committee: Center for Scientific Review Special Emphasis Panel, Small Business: Digestive Sciences.
Date: November 7, 2005.
Time: 8 a.m. to 4 p.m.
Agenda: To review and evaluate grant applications.
Place: Residence Inn Bethesda, 7335 Wisconsin Avenue, Bethesda, MD 20814.
Contact Person: Mushtaq A. Khan, DVM, PhD, Scientific Review Administrator, Center for Scientific Review, National Institutes of Health, 6701 Rockledge Drive, Room 2176, MSC 7818, Bethesda, MD 20892, 301–435–1778, *khanm@csr.nih.gov.*
This notice is being published less than 15 days prior to the meeting due to the timing limitations imposed by the review and funding cycle.

Name of Committee: Center for Scientific Review Special Emphasis Panel, Basic Mechanisms of Cancer Therapeutics.
Date: November 7–8, 2005.
Time: 8 a.m. to 5 p.m.
Agenda: To review and evaluate grant applications.
Place: Hyatt Regency Bethesda, One Bethesda Metro Center, 7400 Wisconsin Avenue, Bethesda, MD 20814.
Contact Person: Suzanne L. Forry-Schaudies, PhD, Scientific Review Administrator, Center for Scientific Review, National Institutes of Health, 6701 Rockledge Drive, Room 6192, MSC 7804, Bethesda, MD 20892, (301) 451–0131, *forryscs@csr.nih.gov.*
This notice is being published less than 15 days prior to the meeting due to the timing limitations imposed by the review and funding cycle.

Name of Committee: AIDS and Related Research Integrated Review Group, AIDS Immunology and Pathogenesis Study Section.
Date: November 7–8, 2005.
Time: 8 a.m. to 5 p.m.
Agenda: To review and evaluate grant applications.
Place: Churchill Hotel, 1914 Connecticut Avenue, Washington, DC 20009.
Contact Person: Abraham P. Bautista, MSC, PhD, Scientist Review Administrator, Center for Scientific Review, National Institutes of Health, 6701 Rockledge Drive, Room 5102, MSC 7852, Bethesda, MD 20892, (301) 435–1506, *bautista@csr.nih.gov.*
This notice is being published less than 15 days prior to the meeting due to the timing limitations imposed by the review and funding cycle.

Name of Committee: Center for Scientific Review Special Emphasis Panel, Review of AIDS Virology SBIR/STTR Applications.
Date: November 7, 2005.
Time: 8:30 a.m. to 5 p.m.
Agenda: To review and evaluate grant applications.
Place: One Washington Circle Hotel, One Washington Circle, Washington, DC 20037.
Contact Person: Kenneth A. Roebuck, PhD, PhD, Scientific Review Administrator, Center for Scientific Review, National Institutes of Health, 6701 Rockledge Drive, Room 5214, MSC 7852, Bethesda, MD 20892, (301) 435–1166, *roebuckk@csr.nih.gov.*
This notice is being published less than 15 days prior to the meeting due to the timing limitations imposed by the review and funding cycle.

Name of Committee: Center for Scientific Review Special Emphasis Panel, Psychopathology and Adult Disorders.
Date: November 7–8, 2005.
Time: 8:30 a.m. to 5 p.m.
Agenda: To review and evaluate grant applications.
Place: St. Gregory Hotel, 2033 M Street, NW., Washington, DC 20036.
Contact Person: Dana Jeffrey Plude, PhD, Scientific Review Administrator, Center for Scientific Review, National Institutes of Health, 6701 Rockledge Drive, Room 3192, MSC 7848, Bethesda, MD 20892, (301) 435–2309, *pluded@csr.nih.gov.*
This notice is being published less than 15 days prior to the meeting due to the timing limitations imposed by the review and funding cycle.

Name of Committee: Center for Scientific Review Special Emphasis Panel, Cell Biology Small Business.
Date: November 7, 2005.
Time: 8:30 a.m. to 5 p.m.
Agenda: To review and evaluate grant applications.
Place: The Watergate, 2650 Virginia Avenue, NW., Washington, DC 20037.
Contact Person: Marcia Steinberg, PhD, Scientific Review Administrator, Center for Scientific Review, National Institutes of Health, 6701 Rockledge Drive, Room 5130, MSC 7840, Bethesda, MD 20892, (301) 435–1023, *steinbem@csr.nih.gov.*
This notice is being published less than 15 days prior to the meeting due to the timing limitations imposed by the review and funding cycle.

Name of Committee: Center for Scientific Review Special Emphasis Panel, Immunology: Small Business (SBIR/STTR) Grant Applications.
Date: November 7–8, 2005.
Time: 8:30 a.m. to 2 p.m.
Agenda: To review and evaluate grant applications.
Place: Holiday Inn Chevy Chase, 5520 Wisconsin Avenue, Chevy Chase, MD 20815.
Contact Person: Stephen M. Nigida, PhD, Scientific Review Administrator, Center for Scientific Review, National Institutes of Health, 6701 Rockledge Drive, Room 4212, MSC 7812, Bethesda, MD 20892, (301) 435–1222, *nigidas@csr.nih.gov.*
This notice is being published less than 15 days prior to the meeting due to the timing limitations imposed by the review and funding cycle.

Name of Committee: Center for Scientific Review Special Emphasis Panel, Genes, Genomes, and Genetic Specials.
Date: November 7–8, 2005.
Time: 8:30 a.m. to 5 p.m.
Agenda: To review and evaluate grant applications.
Place: Melrose Hotel, 2430 Pennsylvania Ave., NW., Washington, DC 20037.
Contact Person: Michael A. Marino, PhD, Scientific Review Administrator, Center for Scientific Review, National Institutes of Health, 6701 Rockledge Drive, Rm. 2216, MSC 7890, Bethesda, MD 20892, (301) 435–0601, *marinomi@csr.nih.gov.*
This notice is being published less than 15 days prior to the meeting due to the timing limitations imposed by the review and funding cycle.

Name of Committee: Center for Scientific Review Special Emphasis Panel, Developmental Disabilities Communications and Science Education.
Date: November 7–8, 2005.
Time: 9 a.m. to 5:30 p.m.
Agenda: To review and evaluate grant applications.
Place: George Washington University Inn, 824 New Hampshire Avenue, NW., Washington, DC 20037.
Contact Person: Thomas A. Tatham, PhD, Scientific Review Administrator, Center for Scientific Review, National Institutes of Health, 6701 Rockledge Drive, Room 3178, MSC 7848, Bethesda, MD 20892, (301) 594–6836, *tathamt@csr.nih.gov.*
This notice is being published less than 15 days prior to the meeting due to the timing limitations imposed by the review and funding cycle.

Name of Committee: Center for Scientific Review Special Emphasis Panel, CNS and Motor Systems.
Date: November 7, 2005.
Time: 10 a.m. to 12 p.m.
Agenda: To review and evaluate grant applications.
Place: National Institutes of Health, 6701 Rockledge Drive, Bethesda, MD 20892, (Telephone Conference Call).
Contact Person: Lynn T. Nielsen-Bohlman, PhD, Scientific Review Administrator, Center for Scientific Review, National Institutes of Health, 6701 Rockledge Drive, Room 3089F, MSC 7848, Bethesda, MD 20892, (301) 594–5287, *nielsenl@csr.nih.gov.*
This notice is being published less than 15 days prior to the meeting due to the timing limitations imposed by the review and funding cycle.

Name of Committee: Center for Scientific Review Special Emphasis Panel, Neuroimmunology and Metabolomics in T Lymphocytes.
Date: November 7, 2005.
Time: 10:30 a.m. to 11:30 a.m.
Agenda: To review and evaluate grant applications.
Place: National Institutes of Health, 6701 Rockledge Drive, Bethesda, MD 20892, (Telephone Conference Call).
Contact Person: Samuel C. Edwards, PhD, Scientific Review Administrator, Center for

Scientific Review, National Institutes of Health, 6701 Rockledge Drive, Room 4200, MSC 7812, Bethesda, MD 20892, (301) 435–1152, *edwardss@csr.nih.gov*.

This notice is being published less than 15 days prior to the meeting due to the timing limitations imposed by the review and funding cycle.

Name of Committee: Center for Scientific Review Special Emphasis Panel, Member Conflict: Ethical, Legal and Societal Implications of Genetics.

Date: November 7, 2005.

Time: 11 a.m. to 1 p.m.

Agenda: To review and evaluate grant applications.

Place: National Institutes of Health, 6701 Rockledge Drive, Bethesda, MD 20892, (Telephone Conference Call).

Contact Person: Richard Panniers, PhD, Scientific Review Administrator, Center for Scientific Review, National Institutes of Health, 6701 Rockledge Drive, Room 2212, MSC 7890, Bethesda, MD 20892, (301) 435–1741, *pannierr@csr.nih.gov*.

This notice is being published less than 15 days prior to the meeting due to the timing limitations imposed by the review and funding cycle.

Name of Committee: Center for Scientific Review Special Emphasis Panel, Member Conflict: Allergy and Hypersensitivity.

Date: November 7, 2005.

Time: 2 p.m. to 2:30 p.m.

Agenda: To review and evaluate grant applications.

Place: National Institutes of Health, 6701 Rockledge Drive, Bethesda, MD 20892, (Telephone Conference Call).

Contact Person: Patrick K. Lai, PhD, Scientific Review Administrator, Center for Scientific Review, National Institutes of Health, 6701 Rockledge Drive, Room 2215, MSC 7812, Bethesda, MD 20892, 301–435–1052, *laip@csr.nih.gov.*

This notice is being published less than 15 days prior to the meeting due to the timing limitations imposed by the review and funding cycle.

Name of Committee: Center for Scientific Review Special Emphasis Panel, Member Conflict: Allergy.

Date: November 7, 2005.

Time: 2:30 p.m. to 3:00 p.m.

Agenda: To review and evaluate grant applications.

Place: National Institutes of Health, 6701 Rockledge Drive, Bethesda, MD 20892, (Telephone Conference Call).

Contact Person: Patrick K. Lai, PhD, Scientific Review Administrator, Center for Scientific Review, National Institutes of Health, 6701 Rockledge Drive, Room 2215, MSC 7812, Bethesda, MD 20892, 301–435–1052, *laip@csr.nih.gov.*

This notice is being published less than 15 days prior to the meeting due to the timing limitations imposed by the review and funding cycle.

Name of Committee: Center for Scientific Review Special Emphasis Panel, NHLBI Supplements.

Date: November 8, 2005.

Time: 8 a.m. to 5 p.m.

Agenda: To review and evaluate grant applications.

Place: Holiday Inn Select Bethesda, 8120 Wisconsin Ave., Bethesda, MD 20814.

Contact Person: Neelakanta Ravindranath, PhD, Scientific Review Administrator, Center for Scientific Review, National Institutes of Health, 6701 Rockledge Drive, Room 5140, MSC 7843, Bethesda, MD 20892, 301–435–1034, *ravindrn@csr.nih.gov.*

This notice is being published less than 15 days prior to the meeting due to the timing limitations imposed by the review and funding cycle.

Name of Committee: Center for Scientific Review Special Emphasis Panel, Small Business: Viral Therapeutics, and Detection of Viruses, Fungi, Parasites and Prions.

Date: November 8–9, 2005.

Time: 8 a.m. to 5 p.m.

Place: The Watergate, 2650 Virginia Avenue, NW., Washington, DC 20037.

Contact Person: Richard G. Kostriken, PhD, Scientific Review Administrator, Center for Scientific Review, National Institutes of Health, 6701 Rockledge Drive, Room 3192, MSC 7808, Bethesda, MD 20892, 301–402–4454, *kostrikr@csr.nih.gov.*

This notice is being published less than 15 days prior to the meeting due to the timing limitations imposed by the review and funding cycle.

Name of Committee: Center for Scientific Review Special Emphasis Panel, Cardiac Development.

Date: November 8, 2005.

Time: 1 p.m. to 2:30 p.m.

Agenda: To review and evaluate grant applications.

Place: National Institutes of Health, 6701 Rockledge Drive, Bethesda, MD 20892, (Telephone Conference Call).

Contact Person: Ai-Ping Zou, PhD, MD, Scientific Review Administrator, Center for Scientific Review, National Institutes of Health, 6701 Rockledge Drive, Room 4118, MSC 7814, Bethesda, MD 20892, 301–435–1777, *zouai@csr.nih.gov.*

This notice is being published less than 15 days prior to the meeting due to the timing limitations imposed by the review and funding cycle.

Name of Committee: Center for Scientific Review Special Emphasis Panel, Antigenic Shift in Neisseria Meningitides.

Date: November 8, 2005.

Time: 1 p.m. to 2 p.m.

Agenda: To review and evaluate grant applications.

Place: National Institutes of Health, 6701 Rockledge Drive, Bethesda, MD 20892, (Telephone Conference Call).

Contact Person: Joseph D. Mosca, PhD, Scientific Review Administrator, Center for Scientific Review, National Institutes of Health, 6701 Rockledge Drive, Room 5158, MSC 7808, Bethesda, MD 20892, (301) 435–2344, *moscajos@csr.nih.gov.*

This notice is being published less than 15 days prior to the meeting due to the timing limitations imposed by the review and funding cycle.

Name of Committee: Center for Scientific Review Special Emphasis Panel, ZRG1 ONC–J (02)M: Genetic Alterations in Breast and Head and Neck Cancer.

Date: November 8, 2005.

Time: 1 p.m. to 3 p.m.

Agenda: To review and evaluate grant applications.

Place: National Institutes of Health, 6701 Rockledge Drive, Bethesda, MD 20892, (Telephone Conference Call).

Contact Person: Martin L. Padarathsingh, PhD, Scientific Review Administrator, Center for Scientific Review, National Institutes of Health, 6701 Rockledge Drive, Room 6212, MSC 7804, Bethesda, MD 20892, (301) 435–1717, *padaratm@csr.nih.gov.*

This notice is being published less than 15 days prior to the meeting due to the timing limitations imposed by the review and funding cycle.

Name of Committee: Center for Scientific Review Special Emphasis Panel, Small Business: Bioelectromagnetics.

Date: November 8, 2005.

Time: 2 p.m. to 4 p.m.

Agenda: To review and evaluate grant applications.

Place: National Institutes of Health, 6701 Rockledge Drive, Bethesda, MD 20892, (Telephone Conference Call).

Contact Person: Lee Rosen, PhD, Scientific Review Administrator, Center for Scientific Review, National Institutes of Health, 6701 Rockledge Drive, Room 5116, MSC 7854, Bethesda, MD 20892, (301) 435–1171, *rosenl@csr.nih.gov.*

This notice is being published less than 15 days prior to the meeting due to the timing limitations imposed by the review and funding cycle.

Name of Committee: Center for Scientific Review Special Emphasis Panel, Alcohol Genetics—Cerebellar Learning and Memory.

Date: November 8, 2005.

Time: 2 p.m. to 3:30 p.m.

Agenda: To review and evaluate grant applications.

Place: National Institutes of Health, 6701 Rockledge Drive, Bethesda, MD 20892, (Telephone Conference Call).

Contact Person: Gamil C. Debbas, PhD, Scientific Review Administrator, Center for Scientific Review, National Institutes of Health, 6701 Rockledge Drive, Room 5170, MSC 7844, Bethesda, MD 20892, (301) 435–1018, *debbasg@csr.nih.gov.*

This notice is being published less than 15 days prior to the meeting due to the timing limitations imposed by the review and funding cycle.

Name of Committee: Center for Scientific Review Special Emphasis Panel, Allografts and Xenografts.

Date: November 8, 2005.

Time: 2 p.m. to 3:30 p.m.

Agenda: To review and evaluate grant applications.

Place: National Institutes of Health, 6701 Rockledge Drive, Bethesda, MD 20892, (Telephone Conference Call).

Contact Person: Paek-Gyu Lee, PhD, Scientific Review Administrator, Center for Scientific Review, National Institutes of Health, 6701 Rockledge Drive, Room 4095D, MSC 7812, Bethesda, MD 20892, (301) 402–7391, *leepg@csr.nih.gov.*

This notice is being published less than 15 days prior to the meeting due to the timing limitations imposed by the review and funding cycle.

Name of Committee: Center for Scientific Review Special Emphasis Panel, Platelet Signaling.
Date: November 8, 2005.
Time: 2 p.m. to 3 p.m.
Agenda: To review and evaluate grant applications.
Place: National Institutes of Health, 6701 Rockledge Drive, Bethesda, MD 20892, (Telephone Conference Call).
Contact Person: Joyce C. Gibson, DSC, Scientific Review Administrator, Center for Scientific Review, National Institutes of Health, 6701 Rockledge Drive, Room 4130, MSC 7814, Bethesda, MD 20892, 301–435–4522, *gibsonj@csr.nih.gov.*
This notice is being published less than 15 days prior to the meeting due to the timing limitations imposed by the review and funding cycle.

Name of Committee: Center for Scientific Review Special Emphasis Panel, Member Conflict: DEV2 and CMAD.
Date: November 8, 2005.
Time: 3 p.m. to 5 p.m.
Agenda: To review and evaluate grant applications.
Place: National Institutes of Health, 6701 Rockledge Drive, Bethesda, MD 20892, (Telephone Conference Call).
Contact Person: Sherry L. Dupere, PhD, Scientific Review Administrator, Center for Scientific Review, National Institutes of Health, 6701 Rockledge Drive, Room 5136, MSC 7843, Bethesda, MD 20892, (301) 435–1021, *duperes@csr.nih.gov.*
This notice is being published less than 15 days prior to the meeting due to the timing limitations imposed by the review and funding cycle.

Name of Committee: Center for Scientific Review Special Emphasis Panel, Bacterial Detection, Food Safety and Microbial Sterilization.
Date: November 9–10, 2005.
Time: 8 a.m. to 4 p.m.
Agenda: To review and evaluate grant applications.
Place: Holiday Inn Select Bethesda, 8120 Wisconsin Ave., Bethesda, MD 20814.
Contact Person: Fouad A. El-Zaatari, PhD, Scientific Review Administrator, Center for Scientific Review, National Institutes of Health, 6701 Rockledge Drive, Room 3026, MSC 7808, Bethesda, MD 20814–9692, (301) 435–1149, *elzaataf@csr.nih.gov.*
Name of Committee: Center for Scientific Review Special Emphasis Panel, Religious Organizations and HIV/AIDS.
Date: November 9, 2005.
Time: 8 a.m. to 5 p.m.
Agenda: To review and evaluate grant applications.
Place: The Watergate, 2650 Virginia Avenue, NW., Washington, DC 20037.
Contact Person: Jose H. Guerrier, PhD, Scientific Review Administrator, Center for Scientific Review, National Institutes of Health, 6701 Rockledge Drive, Room 5218, MSC 7852, Bethesda, MD 20892, 301–435–1137, *guerriej@csr.nih.gov.*

Name of Committee: Center for Scientific Review Special Emphasis Panel, Innate Immunology and Inflammation.
Date: November 9–10, 2005.
Time: 8 a.m. to 5 p.m.
Agenda: To review and evaluate grant applications.
Place: The Watergate, 2650 Virginia Avenue, NW., Washington, DC 20037.
Contact Person: Tina McIntyre, PhD, Scientific Review Administrator, Center for Scientific Review, National Institutes of Health, 6701 Rockledge Drive, Room 4202, MSC 7812, Bethesda, MD 20892, 301–594–6375, *mcintyrt@csr.nih.gov.*

Name of Committee: Center for Scientific Review Special Emphasis Panel, Review of SBIR and R03 Applications.
Date: November 9, 2005.
Time: 8:30 a.m. to 5 p.m.
Agenda: To review and evaluate grant applications.
Place: The Watergate, 2650 Virginia Avenue, NW., Washington, DC 20037.
Contact Person: Mark P. Rubert, PhD, Scientific Review Administrator, Center for Scientific Review, National Institutes of Health, 6701 Rockledge Drive, Room 5128, MSC 7852, Bethesda, MD 20892, 301–435–1775, *rubertm@csr.nih.gov.*

Name of Committee: Center for Scientific Review Special Emphasis Panel, ZRG1 VB–P (01) Q: Vector Biology.
Date: November 9–10, 2005.
Time: 8:30 a.m. to 5 p.m.
Agenda: To review and evaluate grant applications.
Place: Churchill Hotel, 1914 Connecticut Avenue, NW., Washington, DC 20009.
Contact Person: John C. Pugh, PhD, Scientific Review Administrator, Center for Scientific Review, National Institutes of Health, 6701 Rockledge Drive, Room 3114, MSC 7808, Bethesda, MD 20892, (301) 435–2398, *pughjohn@csr.nih.gov.*

Name of Committee: Center for Scientific Review Special Emphasis Panel, Cardiac BRP.
Date: November 9, 2005.
Time: 1 p.m. to 2 p.m.
Agenda: To review and evaluate grant applications.
Place: National Institutes of Health, 6701 Rockledge Drive, Bethesda, MD 20892, (Telephone Conference Call).
Contact Person: Ai-Ping Zou, PhD, MD, Scientific Review Administrator, Center for Scientific Review, National Institutes of Health, 6701 Rockledge Drive, Room 4118, MSC 7814, Bethesda, MD 20892, 301–435–1777, *zouai@csr.nih.gov.*

Name of Committee: Center for Scientific Review Special Emphasis Panel, CADO MCE Member Conflicts.
Date: November 9, 2005.
Time: 1 p.m. to 4 p.m.
Agenda: To review and evaluate grant applications.
Place: National Institutes of Health, 6701 Rockledge Drive, Bethesda, MD 20892, (Telephone Conference Call).
Contact Person: Reed A. Graves, PhD, Scientific Review Administrator, Center for Scientific Review, National Institutes of Health, 6701 Rockledge Drive, Room 6166, MSC 7892, Bethesda, MD 20892, (301) 402–6297, *gravesr@csr.nih.gov.*

Name of Committee: Center for Scientific Review Special Emphasis Panel MEG Related Device Applications.
Date: November 9, 2005.
Time: 2 p.m. to 3:30 p.m.
Agenda: To review and evaluate grant applications.
Place: National Institutes of Health, 6701 Rockledge Drive, Bethesda, MD 20892, (Telephone Conference Call).
Contact Person: Lee Rosen, PhD, Scientific Review Administrator, Center for Scientific Review, National Institutes of Health, 6701 Rockledge Drive, Room 5116, MSC 7854, Bethesda, MD 20892, (303) 435–1171, *rosenl@csr.nih.gov.*

Name of Committee: Center for Scientific Review Special Emphasis Panel, Cardiovascular Development.
Date: November 9, 2005.
Time: 2:30 p.m. to 4:30 p.m.
Agenda: To review and evaluate grant applications.
Place: National Institutes of Health, 6701 Rockledge Drive, Bethesda, MD 20892, (Telephone Conference Call).
Contact Person: Larry Pinkus, PhD, Scientific Review Administrator, Center for Scientific Review, National Institutes of Health, 6701 Rockledge Drive, Room 4132, MSC 7802, Bethesda, MD 20892, (301) 435–1214, *pinkusl@csr.nih.gov.*

Name of Committee: Genes, Genomes, and Genetics Integrated Review Group Ethical, Legal, and Social Implications of Human Genetics Study Section.
Date: November 9–10, 2005.
Time: 7:30 a.m. to 4 p.m.
Agenda: To review and evaluate grant applications.
Place: Bethesda Marriott, 5151 Pooks Hill Road, Bethesda, MD 20814.
Contact Person: Cheryl M. Corsaro, PhD, Scientific Review Administrator, Center for Scientific Review, National Institutes of Health, 6701 Rockledge Drive, Room 2204, MSC 7890, Bethesda, MD 20892, (301) 435–1045, *corsaroc@csr.nih.gov.*

Name of Committee: Center for Scientific Review Special Emphasis Panel Human Brain Project/Neuroinformatics.
Date: November 10, 2005.
Time: 8 a.m. to 7 p.m.
Agenda: To review and evaluate grant applications.
Place: Wyndham Washington, DC, 1400 M Street, NW., Washington, DC 20005.
Contact Person: Robert C. Elliott, PhD, Scientific Review Administrator, Center for Scientific Review, National Institutes of Health, 6701 Rockledge Drive, Room 3130, MSC 7850, Bethesda, MD 20892, 301–435–3009, *elliotro@csr.nih.gov.*

Name of Committee: AIDS and Related Research Integrated Review Group, Behavioral and Social Science Approaches to Preventing HIV/AIDS Study Section.
Date: November 10–11, 2005.
Time: 8 a.m. to 5 p.m.
Agenda: To review and evaluate grant applications.
Place: The Watergate, 2650 Virginia Avenue, NW., Washington, DC 20037.
Contact Person: Jose H. Guerrier, PhD, Scientific Review Administrator, Center for Scientific Review, National Institutes of Health, 6701 Rockledge Drive, Room 5218, MSC 7852, Bethesda, MD 20892, 301–435–1137, *guerriej@csr.nih.gov.*

Name of Committee: Digestive Sciences Integrated Review Group, Hepatobiliary Pathophysiology Study Section.

Date: November 10–11, 2005.

Time: 8 a.m. to 5 p.m.

Agenda: To review and evaluate grant applications.

Place: Holiday Inn Express Hotel and Suites, 550 North Point Street, San Francisco, CA 94133.

Contact Person: Rass M. Shayiq, PhD, Scientific Review Administrator, Center for Scientific Review, National Institutes of Health, 6701 Rockledge Drive, Room 2182, MSC 7818, Bethesda, MD 20892, (301) 435–2359, *shayiqr@csr.nih.gov*.

Name of Committee: Molecular, Cellular and Developmental Neuroscience Integrated Review Group, Neurodegeneration and Biology of Glia Study Section.

Date: November 10–11, 2005.

Time: 8 a.m. to 5 p.m.

Agenda: To review and evaluate grant applications.

Place: Hyatt Regency Bethesda, One Bethesda Metro Center, 7400 Wisconsin Avenue, Bethesda, MD 20814.

Contact Person: Toby Behar, PhD, Scientific Review Administrator, Center for Scientific Review, National Institutes of Health, 6701 Rockledge Drive, Room 4136, MSC 7850, Bethesda, MD 20892, (301) 435–4433, *behart@csr.nih.gov*.

Name of Committee: Center for Scientific Review Special Emphasis Panel, Program Project: Adaptive Variation.

Date: November 10, 2005.

Time: 1 p.m. to 3 p.m.

Agenda: To review and evaluate grant applications.

Place: National Institutes of Health, 6701 Rockledge Drive, Bethesda, MD 20892, (Telephone Conference Call).

Contact Person: Richard A. Currie, PhD, Scientific Review Administrator, National Institutes of Health, Center for Scientific Review, 6701 Rockledge Drive, Room 5128, MSC 7840, Bethesda, MD 20892, (301) 435–1219, *currieri@mail.nih.gov*.

Name of Committee: Center for Scientific Review Special Emphasis Panel, Social Science and Population Studies.

Date: November 10, 2005.

Time: 1 p.m. to 2 p.m.

Agenda: To review and evaluate grant applications.

Place: National Institutes of Health, 6701 Rockledge Drive, Bethesda, MD 20892, (Telephone Conference Call).

Contact Person: Valerie Durrant, PhD, Scientific Review Administrator, Center for Scientific Review, National Institutes of Health, 6701 Rockledge Drive, Room 3148, MSC 7770, Bethesda, MD 20892, (301) 435–3554, *durrantv@csr.nih.gov*.

(Catalogue of Federal Domestic Assistance Program Nos. 93.306, Comparative Medicine; 93.333, Clinical Research, 93.306, 93.333, 93.337, 93.393–93.396, 93.837–93.844, 93.846–93.878, 93.892, 93.893, National Institutes of Health, HHS)

Dated: October 20, 2005.

Anthony M. Coelho, Jr.,

Acting Director, Office of Federal Advisory Committee Policy.

[FR Doc. 05–21651 Filed 10–31–05; 8:45 am]

BILLING CODE 4140–01–M

DEPARTMENT OF HEALTH AND HUMAN SERVICES

National Institutes of Health

Center For Scientific Review; Amended Notice of Meeting

Notice is hereby given of a change in the meeting of the Center for Scientific Review Special Emphasis Panel, October 26, 2005, 2 p.m. to October 26, 2005, 3:30 p.m., National Institutes of Health, 6701 Rockledge Drive, Bethesda, MD, 20892 which was published in the **Federal Register** on October 7, 2005, 70 FR 58723–58725.

The time of the meeting on October 26, 2005 has been changed to 11 a.m. to 12:30 p.m. The meeting date and location remain the same. The meeting is closed to the public.

Dated: October 20, 2005.

Anthony M. Coelho, Jr.,

Acting Director, Office of Federal Advisory Committee Policy.

[FR Doc. 05–21655 Filed 10–31–05; 8:45 am]

BILLING CODE 4140–01–M

DEPARTMENT OF HEALTH AND HUMAN SERVICES

National Institutes of Health

Center for Scientific Review, Amended Notice of Meeting

Notice is hereby given a change in the meeting of the Center for Scientific Review Special Emphasis Panel, October 31, 2005, 2 p.m. to October 31, 2005, 4 p.m., National Institutes of Health, 6701 Rockledge Drive, Bethesda, MD, 20892 which was published in the **Federal Register** on October 18, 2005, 70 FR 60547–60548.

The meeting will be held November 4, 2005, from 3 p.m. to 5 p.m. The meeting location remains the same. The meeting is closed to the public.

Dated: October 20, 2005.

Anthony M. Coelho, Jr.,

Acting Director, Office of Federal Advisory Committee Policy.

[FR Doc. 05–21658 Filed 10–31–05; 8:45 am]

BILLING CODE 4140–01–M

DEPARTMENT OF HEALTH AND HUMAN SERVICES

National Institutes of Health

Center For Scientific Review; Amended Notice of Meeting

Notice is hereby given of a change in the meeting of the Center for Scientific Review Special Emphasis Panel, October 25, 2005, 1 p.m. to October 25, 2005, 3 p.m., Holiday Inn Select Bethesda, 8120 Wisconsin Ave., Bethesda, MD 20814 which was published in the **Federal Register** on October 7, 2005, 70 FR 58723–58725.

The meeting will be held on November 9, 2005, from 12 p.m. to 2 p.m., at the National Institutes of Health, 6701 Rockledge Drive, Bethesda, MD 20882. The meeting is closed to the public.

Dated: October 20, 2005.

Anthony M. Coelho, Jr.,

Acting Director, Office of Federal Advisory Committee Policy.

[FR Doc. 05–21659 Filed 10–31–05; 8:45 am]

BILLING CODE 4140–01–M

DEPARTMENT OF HEALTH AND HUMAN SERVICES

National Institutes of Health

Center For Scientific Review; Amended Notice of Meeting

Notice is hereby given of a change in the meeting of the Developmental Therapeutics Study Section, October 27, 2005, 8 a.m. to 5 p.m., October 28, 2005, Pooks Hill Bethesda Marriott, 5151 Pooks Hill Road, Bethesda, MD 20814, which was published in the **Federal Register** on October 7, 2005, 70 FR 58725–58728.

The meeting will be held at the Bethesda North Marriott Hotel and Conference Center, 5701 Marinelli Road, North Bethesda, MD 20852. The meeting dates and time remain the same. The meeting is closed to the public.

Dated: October 20, 2005.

Anthony M. Coelho, Jr.,

Acting Director, Office of Federal Advisory Committee Policy.

[FR Doc. 05–21660 Filed 10–31–05; 8:45 am]

BILLING CODE 4140–01–M

DEPARTMENT OF HEALTH AND HUMAN SERVICES

National Institutes of Health

Center for Scientific Review; Amended Notice of Meeting

Notice is hereby given of a change in the meeting of the Center for Scientific Review Special Emphasis Panel, October 27, 2005, 8 a.m. to October 27, 2005, 6 p.m. Residence Inn Bethesda, 7335 Wisconsin Avenue, Bethesda, MD, 20814 which was published in the Federal Register on October 7, 2005, 70 FR 58725–58728.

The meeting will be held October 28, 2005. The meeting time and location remain the same. The meeting is closed to the public.

Dated: October 20, 2005.

Anthony M. Coelho Jr.,

Acting Director, Office of Federal Advisory Committee Policy.

[FR Doc. 05–21667 Filed 10–31–05; 8:45 am]

BILLING CODE 4140–01–M

DEPARTMENT OF HEALTH AND HUMAN SERVICES

National Institutes of Health

Center for Scientific Review; Amended Notice of Meeting

Notice is hereby given of a change in the meeting of the Center for Scientific Review Special Emphasis Panel, October 4, 2005, 1:30 p.m. to October 4, 2005, 2:30 p.m., Bethesda Marriott, 5151 Pooks Hill Road, Bethesda, MD 20814 which was published in the **Federal Register** on September 16, 2005, 70 FR 54760–54762.

The meeting will be held November 3, 2005 at the National Institutes of Health, 6701 Rockledge Drive, Bethesda, MD 20882. The meeting time remains the same. The meeting is closed to the public.

Dated: October 21, 2005.

Anthony M. Coelho, Jr.,

Acting Director, Office of Federal Advisory Committee Policy.

[FR Doc. 05–21670 Filed 10–31–05; 8:45 am]

BILLING CODE 4140–01–M

DEPARTMENT OF HEALTH AND HUMAN SERVICES

National Institutes of Health

Center for Scientific Review; Notice of Closed Meetings

Pursuant to section 10(d) of the Federal Advisory Committee Act, as amended (5 U.S.C. Appendix 2), notice is hereby given of the following meetings.

The meetings will be closed to the public in accordance with the provisions set forth in section 552b(c)(4) and 552b(c)(6), Title 5 U.S.C., as amended. The grant applications and the discussions could disclose confidential trade secrets or commercial property such as patentable material, and personal information concerning individuals associated with the grant applications, the disclosure of which would constitute a clearly unwarranted invasion of personal privacy.

Name of Committee: Oncological Sciences Integrated Review Group, Drug Discovery and Molecular Pharmacology Study Section.

Date: November 1–2, 2005.

Time: 8:30 a.m. to 5 p.m.

Agenda: To review and evaluate grant applications.

Place: Bethesda Marriott, 5151 Pooks Hill Road, Bethesda, MD 20814.

Contact Person: Morris I. Kelsey, PhD, Scientific Review Administrator, Center for Scientific Review, National Institutes of Health, 6701 Rockledge Drive, Room 6158, MSC 7804, Bethesda, MD 20892. 301–435–1718. *kelseym@csr.nih.gov.*

This notice is being published less than 15 days prior to the meeting due to the timing limitations imposed by the review and funding cycle.

Name of Committee: Center for Scientific Review Special Emphasis Panel. SBIR/STTR: Risk Prevention and Health Behavior.

Date: November 3–4, 2005.

Time: 8 a.m. to 5 p.m.

Agenda: To review and evaluate grant applications.

Place: Morrison House, 116 South Alfred Street, Alexandria, VA 22314.

Contact Person: Claire E. Gutkin, PhD, MPH, Scientific Review Administrator, Center for Scientific Review, National Institutes of Health, 6701 Rockledge Drive, Room 3138, MSC 7759, Bethesda, MD 20892. 301–594–3139. *gutkincl@csr.nih.gov.*

This notice is being published less than 15 days prior to the meeting due to the timing limitations imposed by the review and funding cycle.

Name of Committee: Center for Scientific Review Special Emphasis Panel. Perinatal Risk.

Date: November 7, 2005.

Time: 11 a.m. to 11:45 a.m.

Agenda: To review and evaluate grant applications.

Place: National Institutes of Health, 6701 Rockledge Drive, Bethesda, MD 20892, (Telephone Conference Call).

Contact Person: Lynn T. Nielsen-Bohlman, PhD, Scientific Review Administrator, Center for Scientific Review, National Institutes of Health, 6701 Rockledge Drive, Room 3089F, MSC 7848, Bethesda, MD 20892. (301) 594–5287. *nielsenl@csr.nih.gov.*

This notice is being published less than 15 days prior to the meeting due to the timing limitations imposed by the review and funding cycle.

Name of Committee: Center for Scientific Review Special Emphasis Panel. R15 Grant Applications.

Date: November 7, 2005.

Time: 2 p.m. to 4 p.m.

Agenda: To review and evaluate grant applications.

Place: National Institutes of Health, 6701 Rockledge Drive, Bethesda, MD 20892, (Telephone Conference Call).

Contact Person: Michael M. Sveda, PhD, Scientific Review Administrator, Center for Scientific Review, National Institutes of Health, 6701 Rockledge Drive, Room 5152, MSC 7842, Bethesda, MD 20892, 301–435–3565. *svedam@csr.nih.gov.*

This notice is being published less than 15 days prior to the meeting due to the timing limitations imposed by the review and funding cycle.

Name of Committee: Center for Scientific Review Special Emphasis Panel. Cognition and Perception.

Date: November 7, 2005.

Time: 12 p.m. to 1 p.m.

Agenda: To review and evaluate grant applications.

Place: National Institutes of Health, 6701 Rockledge Drive, Bethesda, MD 20892, (Telephone Conference Call).

Contact Person: Cheri Wiggs, PhD, Scientific Review Administrator, Center for Scientific Review, National Institutes of Health, 6701 Rockledge Drive, Room 3180, MSC 7848, Bethesda, MD 20892, (301) 435–1261. *wiggsc@csr.nih.gov.*

This notice is being published less than 15 days prior to the meeting due to the timing limitations imposed by the review and funding cycle.

Name of Committee: Center for Scientific Review Special Emphasis Panel. Small Business Respiratory Sciences.

Date: November 8, 2005.

Time: 8 a.m. to 4:30 p.m.

Agenda: To review and evaluate grant applications.

Place: Residence Inn Bethesda, 7335 Wisconsin Avenue, Bethesda, MD 20814.

Contact Person: Mushtaq A. Khan, DVM, PhD, Scientific Review Administrator, Center for Scientific Review, National Institutes of Health, 6701 Rockledge Drive, Room 2176, MSC 7818, Bethesda, MD 20892, 301–435–1778. *khanm@csr.nih.gov.*

This notice is being published less than 15 days prior to the meeting due to the timing limitations imposed by the review and funding cycle.

Name of Committee: Center for Scientific Review Special Emphasis Panel, hESC Training Grants.

Date: November 8, 2005.

Time: 8 a.m. to 3 p.m.

Agenda: To review and evaluate grant applications.

Place: Holiday Inn Select Bethesda, 8120 Wisconsin Ave, Bethesda, MD 20814.

Contact Person: Sherry L. Dupere, PhD, Scientific Review Administrator, Center for Scientific Review, National Institutes of Health, 6701 Rockledge Drive, Room 5136, MSC 7843, Bethesda, MD 20892, (301) 435–1021. *duperes@csr.nih.fov.*

This notice is being published less than 15 days prior to the meeting due to the timing

limitations imposed by the review and funding cycle.

Name of Committee: Center for Scientific Review Special Emphasis Panel, Technology Development.

Date: November 9, 2005.

Time: 8 a.m. to 5 p.m.

Agenda: To review and evaluate grant applications.

Place: Hyatt Regency Bethesda, One Bethesda Metro Center, 7400 Wisconsin Avenue, Bethesda, MD 20814.

Contact Person: Sally Ann Amero, PhD, Scientific Review Administrator, Center for Scientific Review, National Institutes of Health, 6701 Rockledge Drive, Room 4190, MSC 7849, Bethesda, MD 20892, 301–435–1159. *ameros@csr.nih.gov*.

This notice is being published less than 15 days prior to the meeting due to the timing limitations imposed by the review and funding cycle.

Name of Committee: Center for Scientific Review Special Emphasis Panel, Visual Systems Small Business.

Date: November 10–11, 2005.

Time: 8 a.m. to 5 p.m.

Agenda: To review and evaluate grant applications.

Place: Hyatt Regency Bethesda, One Bethesda Metro Center, 7400 Wisconsin Avenue, Bethesda, MD 20814.

Contact Person: Jerome Wujek, PhD, Scientific Review Administrator, Center for Scientific Review, National Institutes of Health, 6701 Rockledge Drive, Room 5194, MSC 7846, Bethesda, MD 20892, (301) 435–2507. *wujeker@csr.nih.gov*.

Name of Committee: Molecular, Cellular and Developmental Neuroscience Integrated Review Group. Biophysics of Synapses, Channels, and Transporters Study Section.

Date: November 10–11, 2005.

Time: 8:30 a.m. to 5 p.m.

Agenda: To review and evaluate grant applications.

Place: Jury's Hotel, 1500 New Hampshire Avenue, NW., Washington, DC 20037.

Contact Person: Michael A. Lang, PhD, Scientific Review Administrator, Center for Scientific Review, National Institutes of Health, 6701 Rockledge Drive, Room 5210, MSC 7850, Bethesda, MD 20892, (301) 435–1265. *langm@csr.nih.gov*.

Name of Committee: Center for Scientific Review Special Emphasis Panel. Bacterial Pathogenesis.

Date: November 10, 2005.

Time: 9 a.m. to 3 p.m.

Agenda: To review and evaluate grant applications.

Place: The River Inn, 924 25th Street, NW., Washington, DC 20037.

Contact Person: Robert Freund, PhD, Scientific Review Administrator, Center for Scientific Review, National Institutes of Health, 6701 Rockledge Drive, Room 3200, MSC 7848, Bethesda, MD 20892, 301–435–1050. *freundr@csr.nih.gov*.

Name of Committee: Center for Scientific Review Special Emphasis Panel. Atherosclerosis and Inflammation.

Date: November 10, 2005.

Time: 2 p.m. to 3 p.m.

Agenda: To review and evaluate grant applications.

Place: National Institutes of Health, 6701 Rockledge Drive, Bethesda, MD 20892, (Telephone Conference Call).

Contact Person: Joyce C. Gibson, DSC, Scientific Review Administrator, Center for Scientific Review, National Institutes of Health, 6701 Rockledge Drive, Room 4130, MSC 7814, Bethesda, MD 20892, 301–435–4522. *gibsonj@csr.nih.gov*.

Name of Committee: Center for Scientific Review Special Emphasis Panel, Member Conflict: Reproductive Epidemiology.

Date: November 10, 2005.

Time: 2 p.m. to 4 p.m.

Agenda: To review and evaluate grant applications.

Place: National Institutes of Health, 6701 Rockledge Drive, Bethesda, MD 20892, (Telephone Conference Call).

Contact Person: Ann Hardy, DRPH, Scientific Review Administrator, Center for Scientific Review, National Institutes of Health, 6701 Rockledge Drive, Room 3158, MSC 7770, Bethesda, MD 20892, (301) 435–0695. *hardyan@csr.nih.gov.*

Name of Committee: Center for Scientific Review Special Emphasis Panel, BRMD: Member Conflict Applications.

Date: November 10, 2005.

Time: 2 p.m. to 4:30 p.m.

Agenda: To review and evaluate grant applications.

Place: National Institutes of Health, 6701 Rockledge Drive, Bethesda, MD 20892, (Telephone Conference Call).

Contact Person: Sandra L. Melnick, DRPH, Scientific Review Administrator, Center for Scientific Review, National Institutes of Health, 6701 Rockledge Drive, Room 3028D, MSC 7770, Bethesda, MD 20892, 301–435–1251. *melnicks@csr.nih.gov*.

Name of Committee: Center for Scientific Review Special Emphasis Panel, Tissue Factors and Membrane Cholesterol Modulation.

Date: November 10, 2005.

Time: 3 p.m. to 5 p.m.

Agenda: To review and evaluate grant applications.

Place: National Institutes of Health, 6701 Rockledge Drive, Bethesda, MD 20892, (Telephone Conference Call).

Contact Person: Robert T. Su, PhD, Scientific Review Administrator, Center for Scientific Review, National Institutes of Health, 6701 Rockledge Drive, Room 4134, MSC 7802, Bethesda, MD 20892, (301) 435–1195. *sur@csr.nih.gov.*

Name of Committee: Center for Scientific Review Special Emphasis Panel, Anterior Eye Disease.

Date: November 10, 2005.

Time: 4 p.m. to 6 p.m.

Agenda: To review and evaluate grant applications.

Place: Hyatt Regency Bethesda, One Bethesda Metro Center, 7400 Wisconsin Avenue, Bethesda, MD 20814.

Contact Person: Jerome Wujek, PhD, Scientific Review Administrator, Center for Scientific Review, National Institutes of Health, 6701 Rockledge Drive, Room 5194, MSC 7846, Bethesda, MD 20892, (301) 435–2507. *wujekjer@csr.nih.gov.*

Name of Committee: Center for Scientific Review Special Emphasis Panel, Nutrition and Metabolism.

Date: November 10, 2005.

Time: 12 p.m. to 2 p.m.

Agenda: To review and evaluate grant applications.

Place: National Institutes of Health, 6701 Rockledge Drive, Bethesda, MD 20892, (Telephone Conference Call).

Contact Person: Michael Knecht, PhD, Scientific Review Administrator, Center for Scientific Review, National Institutes of Health, 6701 Rockledge Drive, Room 6176, MSC 7892, Bethesda, MD 20892, (301) 435–1046, *knechtm@csr.nih.gov.*

Name of Committee: Center for Scientific Review Special Emphasis Panel, Program Project Review Cyro-Electron Microscopy.

Date: November 11, 2005.

Time: 8 a.m. to 5 p.m.

Agenda: To review and evaluate grant applications.

Place: Hyatt Regency Bethesda, One Bethesda Metro Center, 7400 Wisconsin Avenue, Bethesda, MD 20814.

Contact Person: Sally Ann Amero, PhD, Scientific Review Administrator, Center for Scientific Review, National Institutes of Health, 6701 Rockledge Drive, Room 4190, MSC 7849, Bethesda, MD 20892, 301–435–1159, *ameros@csr.nih.gov.*

Name of Committee: Center for Scientific Review Special Emphasis Panel, Chronic Fatigue, Fibromyalgia and Temporomandibular Dysfunction Syndromes.

Date: November 11, 2005.

Time: 10 a.m. to 3 p.m.

Agenda: To review and evaluate grant applications.

Place: The River Inn, 924 25th Street, NW., Washington, DC 20037.

Contact Person: J. Terrell Hoffeld, DDS, PhD, Dental Officer, USPHS, Center for Scientific Review, National Institutes of Health, 6701 Rockledge Drive, Room 4116, MSC 7816, Bethesda, MD 20892, 301–435–1781, *hoffeldt@csr.nih.gov.*

Name of Committee: Center for Scientific Review Special Emphasis Panel, DNA Damage and Repair Member Conflict.

Date: November 11, 2005.

Time: 11 a.m. to 1 p.m.

Agenda: To review and evaluate grant applications.

Place: National Institutes of Health, 6701 Rockledge Drive, Bethesda, MD 20892, (Telephone Conference Call).

Contact Person: Hungyi Shau, PhD, Scientific Review Administrator, Center for Scientific Review, National Institutes of Health, 6701 Rockledge Drive, Room 6214, MSC 7804, Bethesda, MD 20892, 301–435–1720, *shauhung@csr.nih.gov.*

Name of Committee: Center for Scientific Review Special Emphasis Panel, Fellowship—Physiology and Pathophysiology of Organ Systems.

Date: November 13–15, 2005.

Time: 6 p.m. to 5 p.m.

Agenda: To review and evaluate grant applications.

Place: The Watergate Hotel, 2650 Virginia Avenue, NW., Riverview, Washington, DC 20037.

Contact Person: Abdelouahab Aitouche, PhD, Scientific Review Administrator, Center for Scientific Review, National Institutes of Health, 6701 Rockledge Drive, Room 2183, MSC 7818, Bethesda, MD 20892, 301–435–2365, *abdelouahaba@csr.nih.gov.*

Name of Committee: AIDS and Related Research Integrated Review Group, AIDS Clinical Studies and Epidemiology Study Section.
Date: November 14–15, 2005.
Time: 8 a.m. to 5 p.m.
Agenda: To review and evaluate grant applications.
Place: Watergate Hotel, 2650 Virginia Avenue, NW., Washington, DC 20037.
Contact Person: Hilary D. Sigmon, PhD, Scientific Review Administrator, Center for Scientific Review, National Institutes of Health, 6701 Rockledge Drive, Room 5216, MSC 7852, Bethesda, MD 20892, (301) 594–6377, *sigmonh@csr.nih.gov.*

Name of Committee: Center for Scientific Review Special Emphasis Panel, Non-HIV Microbial Vaccine Development.
Date: November 14, 2005.
Time: 8 a.m. to 6 p.m.
Agenda: To review and evaluate grant applications.
Place: One Washington Circle Hotel, One Washington Circle, Washington, DC 20037.
Contact Person: Jin Huang, PhD, Scientific Review Administrator, Center for Scientific Review, National Institutes of Health, 6701 Rockledge Drive, Room 4095G, MSC 7812, Bethesda, MD 20892, 301–435–1187, *jh377p@nih.gov.*

Name of Committee: Center for Scientific Review Special Emphasis Panel, Radiotherapy and Radiation Biology.
Date: November 14, 2005.
Time: 8 a.m. to 5 p.m.
Agenda: To review and evaluate grant applications.
Place: Hyatt Regency Bethesda, One Bethesda Metro Center, 7400 Wisconsin Avenue, Bethesda, MD 20814.
Contact Person: Bo Hong, PhD, Scientific Review Administrator, Center for Scientific Review, National Institutes of Health, 6701 Rockledge Drive, Room 6194, MSC 7804, Bethesda, MD 20892, 301–435–5879, *hongb@csr.nih.gov.*

Name of Committee: Center for Scientific Review Special Emphasis Panel, Native American Research Center for Health.
Date: November 14–15, 2005.
Time: 8 a.m. to 5 p.m.
Agenda: To review and evaluate grant applications.
Place: Holiday Inn Chevy Chase, 5520 Wisconsin Avenue, Chevy Chase, MD 20815.
Contact Person: Mushtaq A. Khan, DVM, PhD, Scientific Review Administrator, Center for Scientific Review, National Institutes of Health, 6701 Rockledge Drive, Room 2176, MSC 7818, Bethesda, MD 20892, 301–435–1778, *khanm@csr.nih.gov.*

Name of Committee: Center for Scientific Review Special Emphasis Panel, Fellowship: Psychophysiology and Social Behavior.
Date: November 14, 2005.
Time: 8 a.m. to 9 a.m.
Agenda: To review and evaluate grant applications.
Place: The Watergate, 2650 Virginia Avenue, NW., Washington, DC 20037.
Contact Person: Maribeth Champoux, PhD, Scientific Review Administrator, Center for Scientific Review, National Institutes of Health, 6701 Rockledge Drive, Room 3182, MSC 7759, Bethesda, MD 20892, 301–594–3163, *champoum@csr.nih.gov.*

Name of Committee: Musculoskeletal, Oral and Skin Sciences Integrated Review Group, Skeletal Muscle and Exercise Physiology Study Section.
Date: November 14–15, 2005.
Time: 8:30 a.m. to 4 p.m.
Agenda: To review and evaluate grant applications.
Place: Wyndham Washington, DC, 1400 M Street, NW., Washington, DC 20005.
Contact Person: Richard J. Bartlett, PhD, Scientific Review Administrator, Center for Scientific Review, National Institutes of Health, 6701 Rockledge Drive, Room 4110, MSC 7814, Bethesda, MD 20892, 301–435–6809, *bartletr@csr.nih.gov.*

Name of Committee: Center for Scientific Review Special Emphasis Panel, Fellowships in Psychopathology, Developmental Disabilities, Stress and Aging.
Date: November 14–15, 2005.
Time: 8:30 a.m. to 5 p.m.
Agenda: To review and evaluate grant applications.
Place: The Watergate, 2650 Virginia Avenue, NW., Washington, DC 20037.
Contact Person: Jane A. Doussard-Roosevelt, PhD, Scientific Review Administrator, Center for Scientific Review, National Institutes of Health, 6701 Rockledge Drive, Room 3184, MSC 7848, Bethesda, MD 20892. (301) 435–4445, *doussarj@csr.nih.gov.*

Name of Committee: AIDS and Related Research Integrated Review Group, HIV/AIDS Vaccines Study Section.
Date: November 14–15, 2005.
Time: 8:30 a.m. to 6 p.m.
Agenda: To review and evaluate grant applications.
Place: Bethesda Marriott, 5151 Pooks Hill Road, Bethesda, MD 20814.
Contact Person: Mary Clare Walker, PhD, Scientific Review Administrator, Center for Scientific Review, National Institutes of Health, 6701 Rockledge Drive, Room 5104, MSC 7852, Bethesda, MD 20892, (301) 435–1165.

Name of Committee: Center for Scientific Review Special Emphasis Panel, Nanotechnology and Nanoscience Special Emphasis Panel.
Date: November 14–15, 2005.
Time: 8:30 a.m. to 6 p.m.
Agenda: To review and evaluate grant applications.
Place: Holiday Inn Select Bethesda, 8120 Wisconsin Ave., Bethesda, MD 20814.
Contact Person: Kathryn M. Koeller, PhD, Scientific Review Administrator, Center for Scientific Review, National Institutes of Health, 6701 Rockledge Drive, Room 4095D, MSC 7806, Bethesda, MD 20892, 301–435–2681, *koellerk@csr.nih.gov.*

Name of Committee: Center for Scientific Review Special Emphasis Panel, Member Conflict: Cancer Immunotherapy.
Date: November 14, 2005.
Time: 11 a.m. to 1 p.m.
Agenda: To review and evaluate grant applications.
Place: National Institutes of Health, 6701 Rockledge Drive, Bethesda, MD 20892, (Telephone Conference Call).
Contact Person: Sharon K. Gubanich, PhD, Scientific Review Administrator, Center for Scientific Review, National Institutes of Health, 6701 Rockledge Drive, Room 6204, MSC 7804, Bethesda, MD 20892, 301–435–1767, *gubanics@csr.nih.gov.*

Name of Committee: Center for Scientific Review Special Emphasis Panel, Member Conflicts: GCMB.
Date: November 14, 2005.
Time: 4 p.m. to 6 p.m.
Agenda: To review and evaluate grant applications.
Place: National Institutes of Health, 6701 Rockledge Drive, Bethesda, MD 20892, (Telephone Conference Call).
Contact Person: Patricia Greenwel, PhD, Scientific Review Administrator, Center for Scientific Review, National Institutes of Health, 6701 Rockledge Drive, Room 2174, MSC 7818, Bethesda, MD 20892, 301–435–1169, *greenwep@csr.nih.gov.*

Name of Committee: Center for Scientific Review Special Emphasis Panel, Member Conflict: Immunology and Pathogenesis of AIDS.
Date: November 15, 2005.
Time: 1 p.m. to 6 p.m.
Agenda: To review and evaluate grant applications.
Place: Bethesda Marriott, 5151 Pooks Hill Road, Bethesda, MD 20814.
Contact Person: Mary Clare Walker, PhD, Scientific Review Administrator, Center for Scientific Review, National Institutes of Health, 6701 Rockledge Drive, Room 5208, MSC 7852, Bethesda, MD 20892, (301) 435–1165, *walkermc@csr.nih.gov.*

Name of Committee: Center for Scientific Review Special Emphasis Panel, Transplant Immunology.
Date: November 15, 2005.
Time: 3 p.m. to 4:30 p.m.
Agenda: To review and evaluate grant applications.
Place: National Institutes of Health, 6701 Rockledge Drive, Bethesda, MD 20892. (Telephone Conference Call).
Contact Person: Paek-Gyu Lee, PhD, Scientific Review Administrator, Center for Scientific Review, National Institutes of Health, 6701 Rockledge Drive, Room 4095D, MSC 7812, Bethesda, MD 20892, (301) 402–7391, *leepg@csr.nih.gov.*

Name of Committee: Center for Scientific Review Special Emphasis Panel, Members Conflicts in Psychopathology, Stress, and Aging.
Date: November 15, 2005.
Time: 12 p.m. to 3 p.m.
Agenda: To review and evaluate grant applications.
Place: The Watergate Hotel, 2650 Virginia Avenue, NW., Washington, DC 20037.
Contact Person: Jane A. Doussard-Roosevelt, PhD, Scientific Review Administrator, Center for Scientific Review, National Institutes of Health, 6701 Rockledge Drive, Room 3184, MSC 7848, Bethesda, MD 20892, (301) 435–4445, *doussarj@csr.nih.gov.*

Name of Committee: Center for Scientific Review Special Emphasis Panel, Member Conflict: Pulmonary Epidemiology.

Date: November 15, 2005.

Time: 12 p.m. to 2 p.m.

Agenda: To review and evaluate grant applications.

Place: National Institutes of Health, 6701 Rockledge Drive, Bethesda, MD 20892. (Telephone Conference Call).

Contact Person: Ann Hardy, DRPH, Scientific Review Administrator, Center for Scientific Review, National Institutes of Health, 6701 Rockledge Drive, Room 3158, MSC 7770, Bethesda, MD 20892, (301) 435–0695, *hardyan@csr.nih.gov.*

Name of Committee: Center for Scientific Review Special Emphasis Panel, Skeletal Biology Development and Disease—A Member Conflict Panel.

Date: November 16, 2005.

Time: 11:30 a.m. to 3 p.m.

Agenda: To review and evaluate grant applications.

Place: National Institutes of Health, 6701 Rockledge Drive, Bethesda, MD 20892. (Telephone Conference Call).

Contact Person: Tamizchelvi Thyagarajan, PhD, Scientific Review Administrator, Center for Scientific Review, National Institutes of Health, 6701 Rockledge Drive, Room 4016K, MSC 7814, Bethesda, MD 20892, 301–435–1327, *tthyagar@csr.nih.gov.*

Name of Committee: Center for Scientific Review Special Emphasis Panel, ZRG1 ONC–J (03)M: Characterization of Oncogenic Factors.

Date: November 16, 2005.

Time: 1 p.m. to 4 p.m.

Agenda: To review and evaluate grant applications.

Place: National Institutes of Health, 6701 Rockledge Drive, Bethesda, MD 20892. (Telephone Conference Call).

Contact Person: Martin L. Padarathsingh, PhD, Scientific Review Administrator, Center for Scientific Review, National Institutes of Health, 6701 Rockledge Drive, Room 6212, MSC 7804, Bethesda, MD 20892, (301) 435–1717, *padaratm@csr.nih.gov.*

Name of Committee: Center for Scientific Review Special Emphasis Panel, CIHB Member Applications.

Date: November 16, 2005.

Time: 3 p.m. to 4:30 p.m.

Agenda: To review and evaluate grant applications.

Place: National Institutes of Health, 6701 Rockledge Drive, Bethesda, MD 20892. (Telephone Conference Call).

Contact Person: Denise Wiesch, PhD, Scientific Review Administrator, Center for Scientific Review, National Institutes of Health, 6701 Rockledge Drive, Room 3150, MSC 7770, Bethesda, MD 20892, (301) 435–0684, *wieschd@csr.nih.gov.*

Name of Committee: Center for Scientific Review Special Emphasis Panel, CLHP Member Applications.

Date: November 16, 2005.

Time: 4:30 p.m. to 6 p.m.

Agenda: To review and evaluate grant applications.

Place: National Institutes of Health, 6701 Rockledge Drive, Bethesda, MD 20892. (Telephone Conference Call).

Contact Person: Denise Wiesch, PhD, Scientific Review Administrator, Center for Scientific Review, National Institutes of Health, 6701 Rockledge Drive, Room 3150, MSC 7770, Bethesda, MD 20892, (301) 435–0684, *wieschd@csr.nih.gov.*

Name of Committee: Center for Scientific Review Special Emphasis Panel, Cell Death and Injury in Chronic Neurodegeration.

Date: November 16–18, 2005.

Time: 7 p.m. to 5 p.m.

Agenda: To review and evaluate grant applications.

Place: Melrose Hotel, 2430 Pennsylvania Ave., NW., Washington, DC 20037.

Contact Person: David L. Simpson, PhD, Scientific Review Administrator, Center for Scientific Review, National Institutes of Health, 6701 Rockledge Drive, Room 5192, MSC 7846, Bethesda, MD 20892, (301) 435–1278. *simpsond@csr.nih.gov.*

(Catalogue of Federal Domestic Assistance Program Nos. 93.306, Comparative Medicine; 93.333, Clinical Research, 93.306, 93.333, 93.337, 93.393–93.396, 93.837–93.844, 93.846–93.878, 93.892, 93.893, National Institutes of Health, HHS)

Dated: October 21, 2005.

Anthony M. Coelho, Jr.,

Acting Director, Office of Federal Advisory Committee Policy.

[FR Doc. 05–21671 Filed 10–31–05; 8:45 am]

BILLING CODE 4140–01–M

DEPARTMENT OF HOMELAND SECURITY

Coast Guard

[USCG–2005–22049]

Collection of Information under Review by Office of Management and Budget (OMB): OMB Control Numbers 1625–0035 and 1625–0051

AGENCY: Coast Guard, DHS.

ACTION: Request for comments.

SUMMARY: In compliance with the Paperwork Reduction Act of 1995, this request for comments announces that the Coast Guard has forwarded two Information Collection Requests (ICRs)—(1) 1625–0035, Title 46 CFR Subchapter Q: Lifesaving, Electrical, and Engineering Equipment, Construction and Materials & Marine Sanitation Devices, and (2) 1625–0051, (A) Reports of MARPOL 73/78 Oil, Noxious Liquid Substances (NLS) and Garbage Discharge; (B) Application for Equivalents, Exemptions and Alternatives; and (C) Voluntary Reports of Pollution Sightings—abstracted below, to the Office of Information and Regulatory Affairs (OIRA) of the Office of Management and Budget (OMB) for review and comment. Our ICR describes the information we seek to collect from the public. Review and comment by OIRA ensures that we impose only paperwork burdens commensurate with our performance of duties.

DATES: Please submit comments on or before December 1, 2005.

ADDRESSES: To make sure that your comments and related material do not reach the docket [USCG–2005–22049] or OIRA more than once, please submit them by only one of the following means:

(1)(a) By mail to the Docket Management Facility, U.S. Department of Transportation (DOT), room PL–401, 400 Seventh Street SW., Washington, DC 20590–0001. (b) By mail to OIRA, 725 17th St NW., Washington, DC 20503, to the attention of the Desk Officer for the Coast Guard.

(2)(a) By delivery to room PL–401 at the address given in paragraph (1)(a) above, between 9 a.m. and 5 p.m., Monday through Friday, except Federal holidays. The telephone number is (202) 366–9329. (b) By delivery to OIRA, at the address given in paragraph (1)(b) above, to the attention of the Desk Officer for the Coast Guard.

(3) By fax to (a) the Facility at (202) 493–2298 and (b) OIRA at (202) 395–6566, or e-mail to OIRA at *oira-docket@omb.eop.gov* attention: Desk Officer for the Coast Guard.

(4)(a) Electronically through the Web site for the Docket Management System at *http://dms.dot.gov*. (b) OIRA does not have a Web site on which you can post your comments.

The Docket Management Facility maintains the public docket for this notice. Comments and material received from the public, as well as documents mentioned in this notice as being available in the docket, will become part of this docket and will be available for inspection or copying at room PL–401 on the Plaza level of the Nassif Building, 400 Seventh Street SW., Washington, DC, between 9 a.m. and 5 p.m., Monday through Friday, except Federal holidays. You may also find this docket on the Internet at *http://dms.dot.gov*.

Copies of the complete ICRs are available through this docket on the Internet at *http://dms.dot.gov*, and also from Commandant (CG–611), U.S. Coast Guard Headquarters, room 6106 (Attn: Ms. Barbara Davis), 2100 Second Street SW., Washington, DC 20593–0001. The telephone number is (202) 267–2326.

FOR FURTHER INFORMATION CONTACT: Ms. Barbara Davis, Office of Information Management, telephone (202) 267–2326 or fax (202) 267–4814, for questions on these documents; or Ms. Andrea M. Jenkins, Program Manager, Docket

Operations, (202) 366–0271, for questions on the docket.

SUPPLEMENTARY INFORMATION: The Coast Guard invites comments on the proposed collection of information to determine whether the collections are necessary for the proper performance of the functions of the Department. In particular, the Coast Guard would appreciate comments addressing: (1) The practical utility of the collections; (2) the accuracy of the estimated burden of the collections; (3) ways to enhance the quality, utility, and clarity of the information that is the subject of the collections; and (4) ways to minimize the burden of collections on respondents, including the use of automated collection techniques or other forms of information technology.

Comments to DMS or OIRA must contain the OMB Control Number of the Information Collection Requests (ICRs) addressed. Comments to DMS must contain the docket number of this request, [USCG 2005–22049]. For your comments to OIRA to be considered, it is best if OIRA receives them on or before December 1, 2005.

Public participation and request for comments: We encourage you to respond to this request for comments by submitting comments and related materials. We will post all comments received, without change, to *http://dms.dot.gov*, and they will include any personal information you have provided. We have an agreement with DOT to use their Docket Management Facility. Please see the paragraph on DOT's ''Privacy Act Policy'' below.

Submitting comments: If you submit a comment, please include your name and address, identify the docket number for this request for comment [USCG–2005–22049], indicate the specific section of this document or the ICR to which each comment applies, and give the reason for each comment. You may submit your comments and material by electronic means, mail, fax, or delivery to the Docket Management Facility at the address under **ADDRESSES**, but please submit them by only one means. If you submit them by mail or delivery, submit them in an unbound format, no larger than 8½ by 11 inches, suitable for copying and electronic filing. If you submit them by mail and would like to know that they reached the Facility, please enclose a stamped, self-addressed postcard or envelope.

The Coast Guard and OIRA will consider all comments and material received during the comment period. We may change the documents supporting this collection of information or even the underlying requirements in view of them.

Viewing comments and documents: To view comments, as well as documents mentioned in this notice as being available in the docket, go to *http://dms.dot.gov* at any time and conduct a simple search using the docket number. You may also visit the Docket Management Facility in room PL–401 on the Plaza level of the Nassif Building, 400 Seventh Street, SW., Washington, DC, between 9 a.m. and 5 p.m., Monday through Friday, except Federal holidays.

Privacy Act

Anyone can search the electronic form of all comments received in dockets by the name of the individual submitting the comment (or signing the comment, if submitted on behalf of an association, business, labor union, etc.). You may review the Privacy Act Statement of DOT in the **Federal Register** published on April 11, 2000 (65 FR 19477), or you may visit *http://dms.dot.gov*.

Previous Request for Comments

This request provides a 30-day comment period required by OIRA. The Coast Guard has already published the 60-day notice (70 FR 47217, August 12, 2005) required by 44 U.S.C. 3506(c)(2). That notice elicited no comment.

Information Collection Request

1. *Title:* Title 46 CFR Subchapter Q: Lifesaving, Electrical, and Engineering Equipment, Construction and Materials & Marine Sanitation Devices.

OMB Control Number: 1625–0035.

Type of Request: Extension of a currently approved collection.

Affected Public: Manufacturers of safety equipment, materials and marine sanitation devices.

Form: CGHQ–10030.

Abstract: This information is used by the Coast Guard to ensure that regulations governing specific types of safety equipment, material and Marine Sanitation Devices (MSDs) installed on commercial vessels and pleasure crafts are met. Manufacturers are required to submit drawings, specifications, and laboratory test reports to the Coast Guard before any approval is given.

Burden Estimate: The estimated burden has increased from 16,880 hours to 20,529 hours a year.

2. *Title:* (A) Reports of MARPOL 73/78 Oil, Noxious Liquid Substances (NLS) and Garbage Discharge; (B) Application for Equivalents, Exemptions and Alternatives; and (C) Voluntary Reports of Pollution Sightings.

OMB Control Number: 1625–0051.

Type of Request: Extension of a currently approved collection.

Affected Public: Vessel owners and operators for (A) and (B), and the public for (C).

Form: None.

Abstract: The information is needed by the Coast Guard to ensure compliance with pollution prevention standards and to respond and investigate pollution incidents.

Burden Estimate: The estimated burden remains the same, 10 hours a year.

Dated: October 24, 2005.

R.T. Hewitt,

Rear Admiral, Assistant Commandant for Command, Control, Communications, Computers and Information Technology.

[FR Doc. 05–21719 Filed 10–31–05; 8:45 am]

BILLING CODE 4910–15–P

DEPARTMENT OF HOMELAND SECURITY

Coast Guard

[CGD09–05–127]

Remedial Action Project for Petroleum and Metals Impacted Soil at Passage Island Light Station, Keweenaw County, MI; Environmental Assessment

AGENCY: U.S. Coast Guard, DHS.

ACTION: Notice of intent and request for public comments.

SUMMARY: The U.S. Coast Guard (USCG) announces its intent to prepare an Environmental Assessment (EA) for remedial action associated with petroleum and metals impacted soil at the Passage Island Light Station, Keweenaw County, Michigan. This letter shall serve as notification for a thirty-day scoping period for the Draft EA. This scoping announcement provides interested parties with information on the USCG Passage Island Light Station, existing environment, and proposed action in advance of issuance of the Draft EA for this project. The Draft EA will assess the alternatives to address impacted soil at the light station. The USCG seeks public and agency input on the scope of the Draft EA. Specifically, the USCG requests input on any environmental concerns that the public may have related to the existing impacted soil, the remedial action alternatives, or sources of relevant data or information for inclusion in the Draft EA.

DATES: Comments and related material must be post-marked on or before 30 days after the date of this notice.

ADDRESSES: Comments and related material regarding the USCG Passage

Island Draft EA scoping must be received or post-marked on or before 30 days after the date of this notice. Comments may be submitted in several ways; they must be addressed directly to the Civil Engineering Unit Cleveland's Environmental Compliance Section and may be mailed, e-mailed, faxed, or delivered in person. To make sure your comments and related material are not entered more than once in the public record, please submit them by only one of the following means:

(1) By mail to Commanding Officer, USCG Civil Engineering Unit (CEU), Attn: Lynn Keller, 1240 East Ninth Street, Room 2179, Cleveland, OH 44199–2060.

(2) By delivery to Room 2179 on the twenty-first floor of the Anthony J. Celebrezze Federal Building, 1240 East Ninth Street, Cleveland, OH 44199–2060 between 7:30 a.m. and 4 p.m., Monday through Friday, except Federal holidays. The general office telephone number is 216–902–6200.

(3) By fax to the USCG Civil Engineering Unit at 216–902–6277. Please indicate on the fax ''Attn: Lynn Keller.''

(4) By electronic mail to *LKeller@ceucleveland.uscg.mil* and/or *FBlaha@ceucleveland.uscg.mil*.

The USCG Civil Engineering Unit Cleveland will maintain the public record for this notice. Comments submitted as described above will become part of the public record and will be available for inspection or copying in Room 2179, located on the twenty-first floor of the Anthony J. Celebrezze Federal Building, 1240 East Ninth Street, Cleveland, OH 44199–2060 between 7:30 a.m. and 4 p.m., Monday through Friday, except Federal holidays. Comments submitted during the Draft EA scoping period will be included in the Draft EA document as an Appendix.

You may also view, download, and print draft and final documents for the Passage Island EA on the USCG CEU Cleveland Web site at *http://www.uscg.mil/mlclant/ceucleveland/er/uscgpassagelight.htm*. The CEU Cleveland Web site navigation page is located at *http://www.uscg.mil/mlclant/ceucleveland/*.

FOR FURTHER INFORMATION CONTACT: If you have questions about this notice or the Passage Island EA, you may contact Mr. Frank Blaha at (216) 902–6255 and *FBlaha@ceucleveland.uscg.mil* or Ms. Lynn Keller at (216) 902–6258 and *LKeller@ceucleveland.uscg.mil*.

SUPPLEMENTARY INFORMATION:

Request for Comments

The USCG requests that any interested party provide any additional information or potential concerns regarding the presence of significant natural or cultural resources that may be potentially affected by the project. Persons submitting comments should include their names and addresses, this notice reference number CGD09–05–127, and the reasons for each comment. You may submit your comments and materials by mail, hand delivery, fax, or electronic means as directed under **ADDRESSES.** If you choose to submit them by mail or hand delivery, submit them in an unbound format, no larger than 8½ by 11 inches, and suitable for copying and electronic filing. If you submit them by mail and would like to know if they reached the CEU, please enclose a stamped, self-addressed postcard or envelope. We will consider all comments and materials received during the comment period.

Background and Purpose

Passage Island is located in the northwestern reaches of Lake Superior, about 60 miles north of Michigan's Keweenaw Peninsula, 22 miles east of Grand Portage, Minnesota, and 35 miles south of Thunder Bay, Ontario. The USCG Passage Island Light Station is located on Passage Island, three and one quarter miles off the northeastern tip of Isle Royale in Lake Superior, within the Isle Royale National Park. Congress designated about 99 percent of Isle Royale National Park as Wilderness in 1976. In addition, Isle Royale was designated a U.S. Biosphere Reserve by the United Nations Educational, Scientific, and Cultural Organization (UNESCO) in 1980.

The USCG lighthouse and associated facilities are located on the southernmost portion of Passage Island, Section 9, T67N R32W, Houghton Township, Keweenaw County, Michigan. Areas of petroleum and metals impacted soils from Light Station activities occupy approximately 0.25 acres of the 6.3-acre site. In accordance with Part 201, Environmental Remediation, of the Natural Resources and Environmental Protection Act (NREPA) of 1994, as amended (Michigan Part 201), the Michigan Department of Environmental Quality (MDEQ) requires that the environmental impacts associated with former operations at the site be investigated and mitigated.

The USCG performed a Phase I Environmental Site Assessment (ESA) in 1997. The Phase I ESA identified possible sources of environmental impact and recommended a Site Investigation (SI) be performed to characterize and delineate the potential sources. The USCG performed an SI at the Passage Island Light Station in 2001. Based on the results of the SI, the USCG concluded that petroleum and metals impacted soils exist at concentrations in excess of the Residential Criteria established under the Michigan Part 201. The impacted area is approximately 8,000 square feet. The depth of impact is approximately 6 inches and the volume of impacted soil is approximately 150 cubic yards. In order to mitigate environmental and human health impacts of the impacted soils, the USCG proposes remedial actions for the site.

NEPA Requirements and Proposed Soil Remediation Project Description

In accordance with the National Environmental Policy Act (NEPA) of 1969 (Section 102(2)(c)), as implemented by the Council on Environmental Quality (CEQ) regulations (40 CFR parts 1500–1508), Department of Transportation (DOT) Order 5610.C (Procedures for Considering Environmental Impacts), and USCG Policy (NEPA: Implementing Procedures and Policy for Considering Environmental Impacts, COMDTINST M16475.1D (Commandant's Instruction)), the USCG intends to prepare an EA. The purpose of the EA is to develop an approach and direction for implementing a petroleum and metals impacted soil remedial project for the impacted area at Passage Island Light Station. Following completion of the EA, the USCG will either file a Finding of No Significant Impact (FONSI) or prepare an Environmental Impact Statement (EIS) to evaluate potentially significant environmental impacts.

NEPA requires Federal agencies to consider all significant aspects of environmental impacts that may result from a proposed action, to inform the public of potential impacts and alternatives, including the no action alternative, and to facilitate public involvement in the assessment process. The core of our impact assessment process is our EA. The EA will include, among other topics, discussions of the purpose and need for the proposed action, a description of alternatives, a description of the affected environment, and an evaluation of the environmental impacts of the proposed action and alternatives. To date, the USCG has identified the following alternatives for analysis in the EA:

• Excavation and re-contouring (no backfill) with off-site disposal as hazardous waste; restricted site closure;
• Excavation and re-contouring (no backfill) with on-site stabilization of contaminated soil and off-site disposal of stabilized soil as non-hazardous waste; restricted site closure; and,
• No Action (Status Quo).

The USCG-preferred remedial action method involves excavation of contaminated soil using a vacuum truck located on a barge in Lake Superior, adjacent to the excavation area. Soils would be loosened with hand tools and then vacuumed up. Field screening would be conducted using hand-held x-ray fluorescence (XRF) equipment to assess the excavation extents for the metals-impacted soil. A photoionization detector (PID) would be used to assess the excavation extents for the petroleum-impacted soil. Confirmatory soil samples would be collected from the sidewalls and floor of the excavation to ensure that soil impacted at concentrations exceeding levels approved by Michigan Department of Environmental Quality (Michigan Residential Criteria or a Calculated Site-Specific Criteria) has been removed. At the request of the National Park Service (NPS), backfill material would not be brought on-site due to concerns regarding introduction of non-native and invasive species. Site restoration would include smoothing out the sides of the excavations and ensuring proper drainage and protection of structure foundations. Contaminated soil would be directly transferred to containers on a barge as the soil is vacuumed up. The containerized soil would then be transported by barge to Duluth, Minnesota, where it will be loaded onto trucks. The trucks would transport the soil to an approved Type I hazardous waste Treatment-Storage-Disposal Facility (TSDF). Due to the high lead levels, the soil would be treated at the landfill via stabilization to meet the Toxicity Characteristic Leaching Procedure (TCLP) standards prior to disposal. The proposed TSDF and disposal facility for hazardous soil is either Onyx Special Services in Menominee Falls, WI or EQ in Belleville, MI. The USCG would need to comply with the United States Environmental Protection Agency (USEPA) Resources Conservation and Recovery Act (RCRA) large quantity generator requirements, which include payment of fees and filing necessary reports. In addition, due to disposal of hazardous waste, the USCG could be placed on the Hazardous Waste Compliance Docket and the site could potentially be listed as a National Priorities List (NPL) site. A deed restriction would be placed on the property to limit use. Groundwater use would be restricted and the current recreational land use and zoning would be maintained.

In addition to the USCG preferred method described above, one alternative remedial action method under consideration would include contaminated soil excavation, on-site soil stabilization and off-site disposal as a non-hazardous waste. This alternative would include using a vacuum truck located on a barge in Lake Superior, adjacent to the excavation area. Soils would be loosened with hand tools and then vacuumed up. Field screening would be conducted using hand-held XRF equipment to assess the excavation extents for the metals-impacted soil. A PID would be used to assess the excavation extents for the petroleum-impacted soil. Confirmatory soil samples would be collected from the sidewalls and floor of the excavation to ensure that soil impacted at concentrations exceeding the Michigan Residential Criteria or Calculated Site-Specific Criteria (if approved by Michigan Department of Environmental Quality) has been removed. At the request of the NPS, backfill material would not be brought on-site due to concerns regarding introduction of non-native and invasive species. Site restoration would include smoothing out the sides of the excavations and ensuring proper drainage and protection of structure foundations. Soil would be mixed with a stabilizing agent prior to transportation to a dock in Duluth, Minnesota. The soil would then be transported to a non-hazardous waste disposal facility. The proposed non-hazardous waste disposal facility is K&W located in Ontonagon, MI. A deed restriction would be placed on the property to limit use. Groundwater use would be restricted and the current recreational land use and zoning would be maintained.

Due to NEPA requirements and the sensitive nature of the sub-Arctic environment and presence of listed plant species at Passage Island Light Station, the no action alternative is also being considered in lieu of performing a soil removal for remedial action. The MDEQ does not support this alternative as the soil contamination at the site is seen as a threat to humans and water resources.

Several other remedial alternatives have been considered and will be discussed briefly in the EA due to their limited applicability at the site in question. These alternatives include the following:

• Hot spot removal;
• Soil stabilization;
• Phytoremediation;
• Heap leaching;
• Soil capping/engineered barrier;
• Soil washing;
• Groundwater surface water interface (GSI) and drinking water pathway elimination and no further action;
• Risk Assessment and no further action;
• State listed/threatened/species of concern plant species relocation (combined with other alternatives).

EA Issues

Issues that the USCG has identified for analysis to date include the effects of the remediation project alternatives on the following resources:

• Land Use (Recreation) and Aesthetics;
• Historic and Cultural Properties;
• Vegetation, Wildlife, Threatened and Endangered Species;
• Water Quality;
• Human Health;
• Air Quality;
• Soil Depletion and Regeneration;
• Noise;
• Transportation (Shipping and Boating); and,
• Generation of Hazardous Materials and Waste.

Cultural Resources

The USCG Passage Island Light Station was established by Executive Order in 1871, and remaining structures at the site date back to 1882. The Passage Island Light Station is eligible for listing on the National Register of Historic Places. In August 2004, a Phase I archaeological cultural resource survey was conducted for the Passage Island Light Station site. Based on a Phase I survey program that combined archival research with pedestrian reconnaissance and subsurface testing, it has been determined that there are no significant prehistoric or historic resources within the 0.25-acre study area. This survey was submitted to the Michigan State Historic Preservation Office (SHPO) along with the required documentation for a project review for the proposed soil remediation work. The Michigan SHPO determined that the proposed action will have no adverse effect on historic and cultural resources at the site as long as the USCG ensures that structures are not damaged during clean up activities and proper grading is achieved.

Natural Resources

Topographically, the Passage Island Light Station area is similar to the nearby Isle Royale. Elevations range

from 620 to 640 feet above mean sea level or approximately 20 to 40 feet above the immediately adjacent Lake Superior (600 feet above mean sea level). The light station area is located at the crest of a bedrock outcrop, bounded on the south, east, and west by wave-cut exposures leading down to Lake Superior, and to the north by forested portions of the island. Soils have developed, accumulated, or been placed in general proximity to the various Light Station structures and in low areas between bedrock exposures. Vegetation in the Light Station vicinity is limited to grasses, weeds, and few small woody shrubs. No Federally listed plant or animal species have been identified. Specimens of one State Threatened plant species, prickly saxifrage (Saxifraga tricuspidata), are located in the vicinity of the Light Station, but outside of the contamination footprint. The USCG has obtained Michigan Department of Natural Resources (MDNR) Permit #1615 for the take of this State Threatened Species if necessary to perform the clean up work. Specimens of twisted whitlow grass (Draba arabisans), a State Species of Concern, are located within the contamination footprint. According to MDNR, there are no legal obligations to protect a State Listed Special Concern plant species.

Public Comment and Document Accessibility

The USCG encourages public participation in the Draft EA process. The scoping period will start with publication of this notice in the **Federal Register**. Following the scoping process, the USCG will prepare a Draft EA. Public notices will be mailed or e-mailed to those that have requested a copy of the Draft EA. This period will provide the public with an opportunity to review the document and to offer appropriate comments.

Comments received during the public scoping period and Draft EA review period will be available in the public record and made available in the Final EA.

All draft and final documents will be available online for viewing and downloading at the USCG CEU Cleveland web site (see **ADDRESSES**). Additionally, a hard copy of all draft and final documents will be available in the following public libraries for public inspection and copying:

Portage Lake District Library—Houghton, MI
Mackinaw Area Public Library—Mackinaw City, MI
Peter White Public Library—Marquette, MI
Bayliss Public Library—Sault Sainte Marie, MI
Duluth Public Library—Duluth, MN
Lansing Public Library—Lansing, MI

If you have any questions regarding this notice, please contact Frank Blaha or Lynn Keller of the USCG Civil Engineering Unit Cleveland Environmental Compliance staff at (216) 902–6255 and (216) 902–6258, respectively.

Dated: October 17, 2005.

J.M. Peters,

Commanding Officer, United States Coast Guard, Civil Engineering Unit, Cleveland.

[FR Doc. 05–21726 Filed 10–31–05; 8:45 am]

BILLING CODE 4910–15–P

DEPARTMENT OF HOMELAND SECURITY

Coast Guard

[CGD09–05–130]

Great Lakes Regional Waterways Management Forum

AGENCY: Coast Guard, DHS.

ACTION: Notice of meeting.

SUMMARY: The Great Lakes Regional Waterways Management Forum will hold a meeting to discuss various waterways management issues. Potential agenda items will include navigation, ballast water regulations, Automatic Identification Systems (AIS), waterways management, and discussions about the agenda for the next meeting. The meeting will be open to the public.

DATES: The meeting will be held November 17, 2005 from 1 p.m. to 5 p.m., and November 18, 2005 from 8:30 a.m. to 12 p.m. Comments must be submitted on or before November 14, 2005 to be considered at the meeting.

ADDRESSES: The meeting will be held at the Village Inn, 751 Christina Street, Point Edward, Ontario. Any written comments and materials should be submitted to Commander (dpw-1), Ninth Coast Guard District, 1240 E. 9th Street, Room 2069, Cleveland, OH 44199.

FOR FURTHER INFORMATION CONTACT: LTjg Regan Blomshield (dpw-1), Ninth Coast Guard District, 1240 E. 9th Street, Room 2069, Cleveland, OH 44199, telephone (216) 902–6050. Persons with disabilities requiring assistance to attend this meeting should contact LTjg Blomshield.

SUPPLEMENTARY: The Great Lakes Waterways Management Forum identifies and resolves waterways management issues that involve the Great Lakes region. The forum meets twice a year to assess the Great Lakes region, assign priorities to areas of concern and identify issues for resolution. The forum membership has identified potential agenda items for this meeting that include: navigation, AIS, ballast water regulations, waterways management, and discussions about the agenda for the next meeting. The specific agenda is still under development. Additional topics of discussion are solicited from the public.

Dated: October 20, 2005.

Robert J. Papp Jr.,

Rear Admiral, U. S. Coast Guard, Commander, Ninth Coast Guard District, Cleveland, Ohio.

[FR Doc. 05–21732 Filed 10–31–05; 8:45 am]

BILLING CODE 4910–15–P

DEPARTMENT OF HOMELAND SECURITY

Federal Emergency Management Agency

[FEMA–3259–EM]

Florida; Amendment No. 2 to Notice of an Emergency Declaration

AGENCY: Federal Emergency Management Agency, Department of Homeland Security.

ACTION: Notice.

SUMMARY: This notice amends the notice of an emergency declaration for the State of Florida (FEMA–3259–EM), dated September 20, 2005, and related determinations.

EFFECTIVE DATE: October 23, 2005.

FOR FURTHER INFORMATION CONTACT: Magda Ruiz, Recovery Division, Federal Emergency Management Agency, Washington, DC 20472, (202) 646–2705.

SUPPLEMENTARY INFORMATION: Notice is hereby given that the incident period for this emergency is closed effective October 23, 2005.

(The following Catalog of Federal Domestic Assistance Numbers (CFDA) are to be used for reporting and drawing funds: 97.030, Community Disaster Loans; 97.031, Cora Brown Fund Program; 97.032, Crisis Counseling; 97.033, Disaster Legal Services Program; 97.034, Disaster Unemployment Assistance (DUA); 97.046, Fire Management Assistance; 97.048, Individuals and Households Housing; 97.049, Individuals and Households Disaster Housing Operations; 97.050, Individuals and Households Program—Other Needs, 97.036, Public

Assistance Grants; 97.039, Hazard Mitigation Grant Program.)

R. David Paulison,

Acting Director, Federal Emergency Management Agency.

[FR Doc. 05–21709 Filed 10–31–05; 8:45 am]

BILLING CODE 9110–10–P

DEPARTMENT OF HOMELAND SECURITY

Federal Emergency Management Agency

[FEMA–1603–DR]

Louisiana; Amendment No. 5 to Notice of a Major Disaster Declaration

AGENCY: Federal Emergency Management Agency, Department of Homeland Security.

ACTION: Notice.

SUMMARY: This notice amends the notice of a major disaster for the State of Louisiana (FEMA–1603–DR), dated August 29, 2005, and related determinations.

EFFECTIVE DATE: October 22, 2005.

FOR FURTHER INFORMATION CONTACT: Magda Ruiz, Recovery Division, Federal Emergency Management Agency, Washington, DC 20472, (202) 646–2705.

SUPPLEMENTARY INFORMATION: Notice is hereby given that, in a letter dated October 22, 2005, the President amended the cost sharing arrangements concerning Federal funds provided under the authority of the Robert T. Stafford Disaster Relief and Emergency Assistance Act, 42 U.S.C. 5121–5206 (Stafford Act), in a letter to R. David Paulison, Acting Director, Federal Emergency Management Agency, Department of Homeland Security as follows:

I have determined that the damage in certain areas of the State of Louisiana resulting from Hurricane Katrina on August 29, 2005, and continuing, is of sufficient severity and magnitude that special conditions are warranted regarding the cost sharing arrangements concerning Federal funds provided under the Robert T. Stafford Disaster Relief and Emergency Assistance Act, 42 U.S.C. 5121–5206 (the Stafford Act).

Therefore, I amend my declarations of August 29, 2005, and September 1, 2005, to authorize Federal funds for debris removal and emergency protective measures (Categories A and B), including direct Federal assistance, under the Public Assistance program, at 100 percent of total eligible costs, through and including November 26, 2005.

Please notify Governor Blanco and the Federal Coordinating Officer of this amendment to my major disaster declaration.

This cost share is effective as of the date of the President's major disaster declaration.

(The following Catalog of Federal Domestic Assistance Numbers (CFDA) are to be used for reporting and drawing funds: 97.030, Community Disaster Loans; 97.031, Cora Brown Fund Program; 97.032, Crisis Counseling; 97.033, Disaster Legal Services Program; 97.034, Disaster Unemployment Assistance (DUA); 97.046, Fire Management Assistance; 97.048, Individuals and Households Housing; 97.049, Individuals and Households Disaster Housing Operations; 97.050 Individuals and Households Program—Other Needs, 97.036, Public Assistance Grants; 97.039, Hazard Mitigation Grant Program.)

R. David Paulison,

Acting Director, Federal Emergency Management Agency.

[FR Doc. 05–21703 Filed 10–31–05; 8:45 am]

BILLING CODE 9110–10–P

DEPARTMENT OF HOMELAND SECURITY

Federal Emergency Management Agency

[FEMA–1603–DR]

Louisiana; Amendment No. 6 to Notice of a Major Disaster Declaration

AGENCY: Federal Emergency Management Agency, Department of Homeland Security.

ACTION: Notice.

SUMMARY: This notice amends the notice of a major disaster for the State of Louisiana (FEMA–1603–DR), dated August 29, 2005, and related determinations.

EFFECTIVE DATE: October 22, 2005.

FOR FURTHER INFORMATION CONTACT: Magda Ruiz, Recovery Division, Federal Emergency Management Agency, Washington, DC 20472, (202) 646–2705.

SUPPLEMENTARY INFORMATION: Notice is hereby given that, in a letter dated October 22, 2005, the President amended the cost sharing arrangements concerning Federal funds provided under the authority of the Robert T. Stafford Disaster Relief and Emergency Assistance Act, 42 U.S.C. 5121–5206 (Stafford Act), in a letter to R. David Paulison, Acting Director, Federal Emergency Management Agency, Department of Homeland Security as follows:

I have determined that the damage in certain areas of the State of Louisiana resulting from Hurricane Katrina beginning on August 29, 2005, and continuing, is of sufficient severity and magnitude that special conditions are warranted regarding the cost sharing arrangements concerning Federal funds provided under the Robert T. Stafford Disaster Relief and Emergency Assistance Act, 42 U.S.C. 5121–5206 (the Stafford Act).

Therefore, I amend my declarations of August 29, 2005, and September 1, 2005, to authorize Federal funds for Public Assistance, at 90 percent of total eligible costs, except assistance previously approved at 100 percent.

This adjustment to State and local cost sharing applies only to Public Assistance costs and direct Federal assistance eligible for such adjustments under the law. The law specifically prohibits a similar adjustment for funds provided to States for Other Needs Assistance (Section 408), and the Hazard Mitigation Grant Program (Section 404). These funds will continue to be reimbursed at 75 percent of total eligible costs.

Please notify the Governor of Louisiana and the Federal Coordinating Officer of this amendment to my major disaster declaration.

This cost share is effective as of the date of the President's major disaster declaration.

(The following Catalog of Federal Domestic Assistance Numbers (CFDA) are to be used for reporting and drawing funds: 97.030, Community Disaster Loans; 97.031, Cora Brown Fund Program; 97.032, Crisis Counseling; 97.033, Disaster Legal Services Program; 97.034, Disaster Unemployment Assistance (DUA); 97.046, Fire Management Assistance; 97.048, Individuals and Households Housing; 97.049, Individuals and Households Disaster Housing Operations; 97.050, Individuals and Households Program—Other Needs, 97.036, Public Assistance Grants; 97.039, Hazard Mitigation Grant Program.)

R. David Paulison,

Acting Director, Federal Emergency Management Agency.

[FR Doc. 05–21704 Filed 10–31–05; 8:45 am]

BILLING CODE 9110–10–P

DEPARTMENT OF HOMELAND SECURITY

Federal Emergency Management Agency

[FEMA–3264–EM]

Massachusetts; Emergency and Related Determinations

AGENCY: Federal Emergency Management Agency, Department of Homeland Security.

ACTION: Notice.

SUMMARY: This is a notice of the Presidential declaration of an emergency for the Commonwealth of Massachusetts (FEMA–3264–EM), dated October 19, 2005, and related determinations.

EFFECTIVE DATE: October 19, 2005.

FOR FURTHER INFORMATION CONTACT: Magda Ruiz, Recovery Division, Federal

Emergency Management Agency, Washington, DC 20472, (202) 646–2705.

SUPPLEMENTARY INFORMATION: Notice is hereby given that, in a letter dated October 19, 2005, the President declared an emergency declaration under the authority of the Robert T. Stafford Disaster Relief and Emergency Assistance Act, 42 U.S.C. 5121–5206 (the Stafford Act), as follows:

I have determined that the emergency conditions in certain areas of the Commonwealth of Massachusetts, resulting from severe storms and flooding beginning on October 7, 2005, and continuing, are of sufficient severity and magnitude to warrant an emergency declaration under the Robert T. Stafford Disaster Relief and Emergency Assistance Act, 42 U.S.C. 5121–5206 (Stafford Act). Therefore, I declare that such an emergency exists in the affected area.

You are authorized to provide appropriate assistance for required emergency measures, authorized under Title V of the Stafford Act to save lives, protect public health and safety, and property or to lessen or avert the threat of a catastrophe in the designated areas. Specifically, you are authorized to provide emergency protective measures (Category B), under the Public Assistance program. This assistance excludes regular time costs for subgrantees' regular employees. In addition, you are authorized to provide such other forms of assistance under Title V of the Stafford Act as you may deem appropriate.

Consistent with the requirement that Federal assistance be supplemental, any Federal funds provided under the Stafford Act for Public Assistance will be limited to 75 percent of the total eligible costs.

In order to provide Federal assistance, you are hereby authorized to allocate from funds available for these purposes such amounts as you find necessary for Federal disaster assistance and administrative expenses.

Further, you are authorized to make changes to this declaration to the extent allowable under the Stafford Act.

The Federal Emergency Management Agency (FEMA) hereby gives notice that pursuant to the authority vested in the Acting Director, Department of Homeland Security, under Executive Order 12148, as amended, Peter Martinasco, of FEMA is appointed to act as the Federal Coordinating Officer for this declared emergency.

I do hereby determine the following area of the Commonwealth of Massachusetts to have been affected adversely by this declared emergency:

Bristol County for Public Assistance (Category B) emergency protective measures.

(The following Catalog of Federal Domestic Assistance Numbers (CFDA) are to be used for reporting and drawing funds: 97.030, Community Disaster Loans; 97.031, Cora Brown Fund Program; 97.032, Crisis Counseling; 97.033, Disaster Legal Services Program; 97.034, Disaster Unemployment Assistance (DUA); 97.046, Fire Management Assistance; 97.048, Individuals and Households Housing; 97.049, Individuals and Households Disaster Housing Operations; 97.050 Individuals and Households Program—Other Needs, 97.036, Public Assistance Grants; 97.039, Hazard Mitigation Grant Program.)

R. David Paulison,

Acting Director, Federal Emergency Management Agency.

[FR Doc. 05–21710 Filed 10–31–05; 8:45 am]

BILLING CODE 9110–10–P

DEPARTMENT OF HOMELAND SECURITY

Federal Emergency Management Agency

[FEMA–1604–DR]

Mississippi; Amendment No. 7 to Notice of a Major Disaster Declaration

AGENCY: Federal Emergency Management Agency, Department of Homeland Security.

ACTION: Notice.

SUMMARY: This notice amends the notice of a major disaster for the State of Mississippi (FEMA–1604–DR), dated August 29, 2005, and related determinations.

EFFECTIVE DATE: October 22, 2005.

FOR FURTHER INFORMATION CONTACT: Magda Ruiz, Recovery Division, Federal Emergency Management Agency, Washington, DC 20472, (202) 646–2705.

SUPPLEMENTARY INFORMATION: Notice is hereby given that, in a letter dated October 22, 2005, the President amended the cost sharing arrangements concerning Federal funds provided under the authority of the Robert T. Stafford Disaster Relief and Emergency Assistance Act, 42 U.S.C. 5121–5206 (Stafford Act), in a letter to R. David Paulison, Acting Director Federal Emergency Management Agency, Department of Homeland Security as follows:

I have determined that the damage in certain areas of the State of Mississippi resulting from Hurricane Katrina on August 29–October 14, 2005, is of sufficient severity and magnitude that special conditions are warranted regarding the cost sharing arrangements concerning Federal funds provided under the Robert T. Stafford Disaster Relief and Emergency Assistance Act, 42 U.S.C. 5121–5206 (the Stafford Act).

Therefore, I amend my declarations of August 29, 2005, and September 1, 2005, to authorize Federal funds for debris removal and emergency protective measures (Categories A and B), including direct Federal assistance, under the Public Assistance program, at 100 percent of total eligible costs, through and including November 26, 2005.

Please notify Governor Barbour and the Federal Coordinating Officer of this amendment to my major disaster declaration.

This cost share is effective as of the date of the President's major disaster declaration.

(The following Catalog of Federal Domestic Assistance Numbers (CFDA) are to be used for reporting and drawing funds: 97.030, Community Disaster Loans; 97.031, Cora Brown Fund Program; 97.032, Crisis Counseling; 97.033, Disaster Legal Services Program; 97.034, Disaster Unemployment Assistance (DUA); 97.046, Fire Management Assistance; 97.048, Individuals and Households Housing; 97.049, Individuals and Households Disaster Housing Operations; 97.050 Individuals and Households Program—Other Needs; 97.036, Public Assistance Grants; 97.039, Hazard Mitigation Grant Program.)

R. David Paulison,

Acting Director, Federal Emergency Management Agency.

[FR Doc. 05–21705 Filed 10–31–05; 8:45 am]

BILLING CODE 9110–10–P

DEPARTMENT OF HOMELAND SECURITY

Federal Emergency Management Agency

[FEMA–1604–DR]

Mississippi; Amendment No. 8 to Notice of a Major Disaster Declaration

AGENCY: Federal Emergency Management Agency, Department of Homeland Security.

ACTION: Notice.

SUMMARY: This notice amends the notice of a major disaster for the State of Mississippi (FEMA–1604–DR), dated August 29, 2005, and related determinations.

EFFECTIVE DATE: October 22, 2005.

FOR FURTHER INFORMATION CONTACT: Magda Ruiz, Recovery Division, Federal Emergency Management Agency, Washington, DC 20472, (202) 646–2705.

SUPPLEMENTARY INFORMATION: Notice is hereby given that, in a letter dated October 22, 2005, the President amended the cost sharing arrangements concerning Federal funds provided under the authority of the Robert T. Stafford Disaster Relief and Emergency Assistance Act, 42 U.S.C. 5121–5206 (Stafford Act), in a letter to R. David Paulison, Acting Director Federal Emergency Management Agency, Department of Homeland Security as follows:

I have determined that the damage in certain areas of the State of Mississippi, resulting from Hurricane Katrina beginning on August 29–October 14, 2005, is of sufficient severity and magnitude that special conditions are warranted regarding the cost sharing arrangements concerning Federal funds provided under the Robert T. Stafford Disaster Relief and Emergency Assistance Act, 42 U.S.C. 5121–5206 (the Stafford Act).

Therefore, I amend my declarations of August 29, 2005, and September 1, 2005, to authorize Federal funds for Public Assistance, at 90 percent of total eligible costs, except assistance previously approved at 100 percent.

This adjustment to State and local cost sharing applies only to Public Assistance costs and direct Federal assistance eligible for such adjustments under the law. The law specifically prohibits a similar adjustment for funds provided to States for Other Needs Assistance (Section 408), and the Hazard Mitigation Grant Program (Section 404). These funds will continue to be reimbursed at 75 percent of total eligible costs.

Please notify the Governor of Mississippi and the Federal Coordinating Officer of this amendment to my major disaster declaration.

This cost share is effective as of the date of the President's major disaster declaration.

(The following Catalog of Federal Domestic Assistance (CFDA) numbers are to be used for reporting and drawing funds: 97.030, Community Disaster Loans; 97.031, Cora Brown Fund Program; 97.032, Crisis Counseling; 97.033, Disaster Legal Services Program; 97.034, Disaster Unemployment Assistance (DUA); 97.046, Fire Management Assistance; 97.048, Individuals and Households Housing; 97.049, Individuals and Households Disaster Housing Operations; 97.050 Individuals and Households Program—Other Needs; 97.036, Public Assistance Grants; 97.039, Hazard Mitigation Grant Program.)

R. David Paulison,

Acting Director, Federal Emergency Management Agency.

[FR Doc. 05–21706 Filed 10–31–05; 8:45 am]

BILLING CODE 9110–10–P

DEPARTMENT OF HOMELAND SECURITY

Federal Emergency Management Agency

[FEMA–1606–DR]

Texas; Amendment No. 7 to Notice of a Major Disaster Declaration

AGENCY: Federal Emergency Management Agency, Department of Homeland Security.

ACTION: Notice.

SUMMARY: This notice amends the notice of a major disaster declaration for the State of Texas (FEMA–1606–DR), dated September 24, 2005, and related determinations.

EFFECTIVE DATE: October 20, 2005.

FOR FURTHER INFORMATION CONTACT: Magda Ruiz, Recovery Division, Federal Emergency Management Agency, Washington, DC 20472, (202) 646–2705.

SUPPLEMENTARY INFORMATION: The notice of a major disaster declaration for the State of Texas is hereby amended to include the following areas among those areas determined to have been adversely affected by the catastrophe declared a major disaster by the President in his declaration of September 24, 2005:

Brazoria and Montgomery Counties for Public Assistance [Categories C–G] (already designated for Individual Assistance and debris removal and emergency protective measures [Categories A and B] under the Public Assistance program, including direct Federal assistance.)

Marion County for Public Assistance [Categories C–G] (already designated for debris removal and emergency protective measures [Categories A and B] under the Public Assistance program, including direct Federal assistance.)

(The following Catalog of Federal Domestic Assistance Numbers (CFDA) are to be used for reporting and drawing funds: 97.030, Community Disaster Loans; 97.031, Cora Brown Fund Program; 97.032, Crisis Counseling; 97.033, Disaster Legal Services Program; 97.034, Disaster Unemployment Assistance (DUA); 97.046, Fire Management Assistance; 97.048, Individuals and Households Housing; 97.049, Individuals and Households Disaster Housing Operations; 97.050 Individuals and Households Program—Other Needs; 97.036, Public Assistance Grants; 97.039, Hazard Mitigation Grant Program.)

R. David Paulison,

Acting Director, Federal Emergency Management Agency.

[FR Doc. 05–21707 Filed 10–31–05; 8:45 am]

BILLING CODE 9110–10–P

DEPARTMENT OF HOMELAND SECURITY

Federal Emergency Management Agency

[FEMA–1606–DR]

Texas; Amendment No. 8 to Notice of a Major Disaster Declaration

AGENCY: Federal Emergency Management Agency, Department of Homeland Security.

ACTION: Notice.

SUMMARY: This notice amends the notice of a major disaster declaration for the State of Texas (FEMA–1606–DR), dated September 24, 2005, and related determinations.

EFFECTIVE DATE: October 21, 2005.

FOR FURTHER INFORMATION CONTACT: Magda Ruiz, Recovery Division, Federal Emergency Management Agency, Washington, DC 20472, (202) 646–2705.

SUPPLEMENTARY INFORMATION: The Federal Emergency Management Agency (FEMA) hereby gives notice that pursuant to the authority vested in the Acting FEMA Director, Department of Homeland Security, under Executive Order 12148, as amended, Sandra Coachman, of FEMA is appointed to act as the Federal Coordinating Officer for this declared disaster.

This action terminates my appointment of Thomas P. Davies as Federal Coordinating Officer for this disaster.

(The following Catalog of Federal Domestic Assistance Numbers (CFDA) are to be used for reporting and drawing funds: 97.030, Community Disaster Loans; 97.031, Cora Brown Fund Program; 97.032, Crisis Counseling; 97.033, Disaster Legal Services Program; 97.034, Disaster Unemployment Assistance (DUA); 97.046, Fire Management Assistance; 97.048, Individuals and Households Housing; 97.049, Individuals and Households Disaster Housing Operations; 97.050 Individuals and Households Program—Other Needs; 97.036, Public Assistance Grants; 97.039, Hazard Mitigation Grant Program.)

R. David Paulison,

Acting Director, Federal Emergency Management Agency.

[FR Doc. 05–21708 Filed 10–31–05; 8:45 am]

BILLING CODE 9110–10–P

DEPARTMENT OF HOMELAND SECURITY

Immigration and Customs Enforcement Bureau

[File No. OMB–40]

Agency Information Collection Activities: Comment Request

ACTION: Request OMB emergency approval; exemption from NSEERS registration requirements.

The Department of Homeland Security (DHS) and the U.S. Immigration and Customs Enforcement (ICE) has submitted an emergency information collection request (ICR) utilizing emergency review procedures, to the Office of Management and Budget (OMB) for review and clearance in accordance with section 1320.13(a)(1)(ii) and (a)(2)(iii) of the Paperwork Reduction Act of 1995. The DHS has determined that it cannot reasonably comply with the normal clearance procedures under this part

because normal clearance procedures are reasonably likely to prevent or disrupt the collection of information. Therefore, immediate OMB approval has been requested. If granted, the emergency approval is only valid for 180 days. All comments and/or questions pertaining to this pending request for emergency approval must be directed to OMB, Office of Information and Regulatory Affairs, Attention: Department of Homeland Security Desk Officer, 725 17th Street, NW., Suite 10235, Washington, DC 20503.

During the first 60 days of this same period, a regular review of this information collection is also being undertaken. During the regular review period, the DHS requests written comments and suggestions from the public and affected agencies concerning this information collection. Comments are encouraged and will be accepted until January 3, 2006. During 60-day regular review, all comments and suggestions, or questions regarding additional information, to include obtaining a copy of the information collection instrument with instructions, should be directed to Mr. Richard A. Sloan, Director, Regulatory Management Division, Department of Homeland Security, 111 Massachusetts Avenue, NW., Washington, DC 20529, 3rd Floor, 202–272–8377. Written comments and suggestions from the public and affected agencies concerning the collection of information should address one or more of the following four points:

(1) Evaluate whether the proposed collection of information is necessary for the proper performance of the functions of the agency, including whether the information will have practical utility;

(2) Evaluate the accuracy of the agencies estimate of the burden of the proposed collection of information, including the validity of the methodology and assumptions used;

(3) Enhance the quality, utility, and clarity of the information to be collected; and

(4) Minimize the burden of the collection of information on those who are to respond, including through the use of appropriate automated, electronic, mechanical, or other technological collection techniques or other forms of information technology, *e.g.*, permitting electronic submission of responses.

Overview of this information collection:

(1) *Type of Information Collection:* Extension of a currently approved collection.

(2) *Title of the Form/Collection:* Exemption from NSEERS Registration Requirements.

(3) *Agency form number, if any, and the applicable component of the Department of Homeland Security sponsoring the collection:* No Agency Form Number. File No. OMB–40, U.S. Immigration and Customs Enforcement.

(4) *Affected public who will be asked or required to respond, as well as a brief abstract:* Primary: Individuals and Households. This information collection allows an alien to seek an exemption from the NSEERS registration requirements by submitting a letter to the Department of Homeland Security containing specific information.

(5) *An estimate of the total number of respondents and the amount of time estimated for an average respondent to respond:* 5,800 responses at 30 minutes (.5 hours) per response.

(6) *An estimate of the total public burden (in hours) associated with the collection:* 2,900 annual burden hours.

Dated: October 26, 2005.

Richard A. Sloan,

Director, Regulatory Management Division, U.S. Citizenship and Immigration Services.

[FR Doc. 05–21639 Filed 10–31–05; 8:45 am]

BILLING CODE 4410–10–M

DEPARTMENT OF HOMELAND SECURITY

Bureau of Citizenship and Immigration Services

Agency Information Collection Activities: Extension of a Currently Approved Information Collection; Comment Request

ACTION: 30-Day Notice of Information Collection Under Review: Application for Status as Temporary Resident under Section 245A of the Immigration and Nationality Act, Form I–687.

The Department of Homeland Security, U.S. Citizenship and Immigration Services (CIS) have submitted the following information collection request to the Office of Management and Budget (OMB) for review and clearance in accordance with the Paperwork Reduction Act of 1995. The information collection was previously published in the **Federal Register** on March 23, 2005 at 70 FR 14706, allowing for a 30-day public comment period. No comments were received by CIS on this information collection and OMB granted a 6-month approval for this collection.

The purpose of this notice is to provide for a second 30-day period for public comments and obtain a 3-year approval for the use of this form. Comments are encouraged and will be accepted until December 1, 2005. This process is conducted in accordance with 5 CFR 1320.10.

Written comments and suggestions from the public and affected agencies concerning the collection of information should address one or more of the following four points:

(1) Evaluate whether the proposed collection of information is necessary for the proper performance of the functions of the agency, including whether the information will have practical utility;

(2) Evaluate the accuracy of the agency's estimate of the burden of the proposed collection of information, including the validity of the methodology and assumptions used;

(3) Enhance the quality, utility, and clarity of the information to be collected; and

(4) Minimize the burden of the collection of information on those who are to respond, including through the use of appropriate automated, electronic, mechanical, or other technological collection techniques or other forms of information technology, *e.g.*, permitting electronic submission of responses.

Overview of this information collection:

(1) *Type of Information Collection:* Extension of a currently approved collection.

(2) *Title of the Form/Collection:* Application for Status as Temporary Resident under Section 245A of the Immigration and Nationality Act.

(3) *Agency form number, if any, and the applicable component of the Department of Homeland Security sponsoring the collection:* Form I–687. U.S. Citizenship and Immigration Services.

(4) *Affected public who will be asked or required to respond, as well as a brief abstract: Primary:* Individuals and Households. The collection of information on Form I–687 is required to verify the applicant's eligibility for temporary status, and if the applicant is deemed eligible, to grant him or her the benefit sought.

(5) *An estimate of the total number of respondents and the amount of time estimated for an average respondent to respond:* 100,000 responses at 1 hour and 10 minutes (1.16 hours) per response.

(6) *An estimate of the total public burden (in hours) associated with the collection:* 116,000 annual burden hours.

Information about CIS forms is available online at the CIS Forms, Fees and Fingerprints Information Center. The Forms and Fees link provides information on immigration forms and how to print them. We recommend that you obtain all of your forms by downloading (printing) them from this Web site. This will ensure that you will have the most up-to-date version of the form that is currently available.

If you have additional comments, suggestions, or need additional information, please contact Director, Regulatory Management Division (RMD), CIS, Department of Homeland Security, 111 Massachusetts Avenue, NW., Washington, DC 20529.

Dated: October 26, 2005.

Richard A. Sloan,

Director, Regulatory Management Division, Department of Homeland Security, U.S. Citizenship and Immigrant Services.

[FR Doc. 05–21717 Filed 10–31–05; 8:45 am]

BILLING CODE 4410–10–M

DEPARTMENT OF HOUSING AND URBAN DEVELOPMENT

[Docket No. FR–4971–N–56]

Notice of Submission of Proposed Information Collection to OMB; Qualification/Requalification CDBG Urban Counties Grants/New York Towns

AGENCY: Office of the Chief Information Officer, HUD.

ACTION: Notice.

SUMMARY: The proposed information collection requirement described below has been submitted to the Office of Management and Budget (OMB) for review, as required by the Paperwork Reduction Act. The Department is soliciting public comments on the subject proposal.

This is a request for an extension of the approval to collect the information under the Community Development Block Grant (CDBG) program.

DATES: *Comments Due Date:* December 1, 2005.

ADDRESSES: Interested persons are invited to submit comments regarding this proposal. Comments should refer to the proposal by name and/or OMB approval Number (2506–0170) and should be sent to: HUD Desk Officer, Office of Management and Budget, New Executive Office Building, Washington, DC 20503; fax: 202–395–6974.

FOR FURTHER INFORMATION CONTACT: Wayne Eddins, Reports Management Officer, AYO, Department of Housing and Urban Development, 451 Seventh Street, SW., Washington, DC 20410; e-mail *Wayne_Eddins@HUD.gov;* or Lillian Deitzer at *Lillian_L_Deitzer@HUD.gov* or telephone (202) 708–2374. This is not a toll-free number. Copies of available documents submitted to OMB may be obtained from Mr. Eddins or Ms. Deitzer.

SUPPLEMENTARY INFORMATION: This notice informs the public that the Department of Housing and Urban Development has submitted to OMB a request for approval of the information collection described below. This notice is soliciting comments from members of the public and affecting agencies concerning the proposed collection of information to: (1) Evaluate whether the proposed collection of information is necessary for the proper performance of the functions of the agency, including whether the information will have practical utility; (2) Evaluate the accuracy of the agency's estimate of the burden of the proposed collection of information; (3) Enhance the quality, utility, and clarity of the information to be collected; and (4) Minimize the burden of the collection of information on those who are to respond; including through the use of appropriate automated collection techniques or other forms of information technology, e.g., permitting electronic submission of responses.

This notice also lists the following information:

Title of Proposal: Qualification/Requalification CDBG Urban Counties Grants/New York Towns.

OMB Approval Number: 2506–0170.

Form Numbers: None.

Description of the Need For the Information and its Proposed Use: Based on statutory provisions, counties seeking qualification or requalification as urban counties under the CDBG program must provide information to HUD every three years identifying the units of general local governments (UGLGs) within the county participating as a part of the county for purposes of receiving CDBG funds. The population of UGLGs for each eligible urban county and New York town are used in HUD's allocation of CDBG funds for all entitlement and State CDBG grantees. New York towns must undertake a similar process every three years because under New York State law, New York towns that contain incorporated UGLGs within their boundaries cannot qualify as metropolitan cities unless they execute cooperation agreements with all such incorporated units. The New York town qualification process must be completed prior to the qualification or urban counties so that any town that does not qualify as a metropolitan city will still have an opportunity to participate as part of an urban county.

Frequency of Submission: On occasion.

	Number of respondents	Annual responses	×	Hours per response	=	Burden hours
Reporting Burden	178	61		62		3,798

Total Estimated Burden Hours: 3,798.

Affected Members of the Public: Urban counties and New York towns that are eligible as entitlement grantees of the CDBG program.

Status: Extension of an existing collection.

Authority: Section 3507 of the Paperwork Reduction Act of 1995, 44 U.S.C. 35, as amended.

Dated: October 25, 2005.

Wayne Eddins,

Departmental Paperwork Reduction Act Officer, Office of the Chief Information Officer.

[FR Doc. E5–6014 Filed 10–31–05; 8:45 am]

BILLING CODE 4210–27–P

DEPARTMENT OF THE INTERIOR

Fish and Wildlife Service

Notice of Intent To Prepare a Comprehensive Conservation Plan and Environmental Assessment for the Rappahannock River Valley National Wildlife Refuge

AGENCY: Fish and Wildlife Service, Department of the Interior.

ACTION: Notice of intent.

SUMMARY: The U.S. Fish and Wildlife Service is preparing a Comprehensive Conservation Plan (CCP) and Environmental Assessment (EA) for the Rappahannock River Valley National Wildlife Refuge (NWR). This notice advises the public that the U.S. Fish and Wildlife Service (Service) intends to gather information necessary for preparing the CCP and EA pursuant to the National Wildlife Refuge System Administration Act of 1966, as amended by the National Wildlife Refuge System Improvement Act of 1997, and the National Environmental Policy Act of 1969. The Service is furnishing this notice in compliance with Service planning policy, to (1) advise other Federal and State agencies and the public of our intention to conduct detailed planning on this refuge; and, (2) obtain suggestions and information on the scope of issues to include in the environmental document.

The Service will involve the public through open houses, informational and technical meetings, and written comments. Special mailings, newspaper articles, and announcements will provide information about opportunities for public involvement in the planning process.

DATES: We are now planning public scoping meetings for December 2005 in Warsaw, Port Royal and Richmond, Virginia. We will announce their locations, dates and times at least 2 weeks in advance, in special mailings and newspaper notices and through personal contacts.

ADDRESSES: Rappahannock River Valley NWR, 336 Wilna Road, P.O. Box 1030, Warsaw, Virginia 22572–1030, at 804–333–1470 (telephone); 804–333–3396 (FAX), Web site *http://www.fws.gov/northeast/va/rap.htm.*

To Obtain Further Information, Ask Questions, or Comment Contact: Nancy McGarigal, Refuge Planner, U.S. Fish and Wildlife Service, 300 Westgate Center Drive, Hadley, Massachusetts 01035; 413–253–8562 (telephone); 413–253–8468 (FAX); *northeastplanning@fws.gov* (electronic mail).

SUPPLEMENTARY INFORMATION: Under the National Wildlife Refuge System Administration Act of 1966, as amended by the National Wildlife Refuge System Improvement Act of 1997 (16 U.S.C. 668dd–668ee), the Service is to manage all lands in the National Wildlife Refuge System in accordance with an approved comprehensive conservation plan. The plan guides management decisions and identifies refuge goals, long-range objectives, and strategies for achieving refuge purposes over a 15-year period.

The planning process will cover many elements, including wildlife and habitat management, visitor and recreational activities, cultural resource protection, and facilities and infrastructure. Compatibility determinations will be completed for all applicable refuge uses. We will also conduct a wilderness review and a wild and scenic rivers evaluation to determine whether any areas on the refuge qualify for those Federal designations.

Public input into the planning process is essential. The comments we receive will help identify key issues and develop refuge goals and objectives for managing refuge resources and visitors. Additional opportunities for public participation will arise throughout the planning process, which we expect to complete in 2007. Data collection has already begun to compile up-to-date information on refuge resources and serve as a foundation for science-based resource decisions. We will prepare the environmental assessment in accordance with the Council on Environmental Quality procedures for implementing the National Environmental Policy Act of 1969 (42 U.S.C. 4321–4370d).

The 7,379-acre Rappahannock River Valley NWR was established in 1996 to conserve and protect fish and wildlife resources, including endangered and threatened species and wetlands. Its approved acquisition boundary includes parts of Lancaster, Middlesex, Richmond, Essex, Caroline, Westmoreland, and King George counties in Virginia. The Rappahannock River, a tributary of the Chesapeake Bay, bisects that boundary. Refuge habitats include freshwater tidal marsh, forested swamp, upland deciduous forest, mixed pine forest, and managed grassland.

Refuge visitors engage in wildlife observation and photography, environmental education, hunting, and fishing. The refuge headquarters is located in Warsaw, Virginia.

Dated: October 5, 2005.

Richard O. Bennett,

Acting Regional Director, U.S. Fish and Wildlife Service, Hadley, Massachusetts.

[FR Doc. 05–21693 Filed 10–31–05; 8:45 am]

BILLING CODE 4310–55–P

DEPARTMENT OF THE INTERIOR

Fish and Wildlife Service

Endangered and Threatened Species Permit Applications

AGENCY: Fish and Wildlife Service, Interior.

ACTION: Notice of receipt of application.

SUMMARY: The following applicant has applied for a permit to conduct certain activities with endangered species. This notice is provided pursuant to section 10(c) of the Endangered Species Act of 1973, as amended (16 U.S.C. 1531, *et seq.*).

DATES: Written data or comments must be received on or before December 1, 2005.

ADDRESSES: Send written data or comments to the Regional Director (Attention: Peter Fasbender), U.S. Fish and Wildlife Service, Ecological Services, 1 Federal Drive, Fort Snelling, Minnesota 55111–4056.

FOR FURTHER INFORMATION CONTACT: Mr. Peter Fasbender, (612) 713–5343.

SUPPLEMENTARY INFORMATION:

Permit Number: TE113009.

Applicant: Steven Ahlstedt, Norris, Tennessee.

The applicant requests a permit amendment to take the white catspaw (*Epioblasma obliquata perobliqua*) and purple catspaw (*E. o. obliquata*) throughout Indiana and Ohio. The scientific research is aimed at enhancement of survival of the species in the wild.

Dated: October 12, 2005.

Wendi Weber,

Assistant Regional Director, Ecological Services, Region 3, Fort Snelling, Minnesota.

[FR Doc. 05–21694 Filed 10–31–05; 8:45 am]

BILLING CODE 4310–55–P

DEPARTMENT OF THE INTERIOR

Fish and Wildlife Service

Notice of Availability, Draft Programmatic Environmental Assessment

AGENCY: Fish and Wildlife Service, Department of the Interior.

ACTION: Notice of availability.

SUMMARY: The U.S. Fish and Wildlife Service, on behalf of the Department of the Interior, and the Massachusetts Executive Office of Environmental Affairs, as Natural Resource Trustees, announces the release for public review of the Draft Programmatic Environmental Assessment (PEA) for the Massachusetts Housatonic River Watershed Restoration Program. The Draft PEA presents a restoration program featuring a mix of restoration approaches, including aquatic restoration, wildlife/terrestrial restoration, enhancement of recreational opportunities, and education/outreach

initiatives. A mix of restoration approaches will allow the greatest degree of flexibility in the project selection process and will ensure the greatest environmental and socioeconomic benefits. This Draft PEA compares the preferred, blended restoration alternative with alternatives that focus on a single restoration approach, as well as with a no-action alternative in which no restoration is implemented with natural resource damages (NRD) funds. This Draft PEA is part of the restoration planning and implementation phase of the General Electric/Housatonic River Natural Resource Damage Assessment and Restoration (NRDAR) case.

DATES: Written comments must be submitted on or before December 1, 2005.

ADDRESSES: Requests for copies of the Draft PEA may be made to: U.S. Fish and Wildlife Service, Attention: Veronica Varela, New England Field Office, 70 Commercial Street, Suite 300, Concord, New Hampshire 03301.

Written comments or materials regarding the Draft PEA should be sent to the same address.

FOR FURTHER INFORMATION CONTACT: Veronica Varela, U.S. Fish and Wildlife Service, New England Field Office, 70 Commercial Street, Suite 300, Concord, New Hampshire 03301. Interested parties may also call 603–223–2541 or e-mail *Veronica_Varela@fws.gov* for further information.

SUPPLEMENTARY INFORMATION: During the period between the late 1930s and the late 1970s, the General Electric Company (GE) facility in Pittsfield, Massachusetts released polychlorinated biphenyls (PCBs), via the wastewater and storm systems associated with the facility, to the Housatonic River and Silver Lake in Pittsfield. In addition, a number of former oxbows were straightened and filled to alleviate flooding, and subsequently have been found to contain PCB-contaminated soils and fill. The release of PCBs adversely affected natural resources including fish, birds, amphibians, reptiles and their habitats, and impacted natural resource-based recreational uses.

On October 7, 1999, the U.S. Environmental Protection Agency; the U.S. Department of Justice; the Commonwealth of Massachusetts Department of Environmental Protection, the Office of the Attorney General, and the Executive Office of Environmental Affairs; the Connecticut Department of Environmental Protection and the Office of the Attorney General; the U.S. Department of the Interior; the National Oceanic and Atmospheric Administration; the City of Pittsfield, Massachusetts; the Pittsfield Economic Development Authority; and GE reached a comprehensive agreement concerning the cleanup of GE's Pittsfield facility, certain off-site properties, and the Housatonic River, and concerning compensation for NRD. The comprehensive agreement was lodged with the U.S. District Court of Massachusetts, Springfield, Massachusetts, and approved on October 27, 2000. Under this agreement, GE provided $15.5 million for compensatory restoration activities. Of this amount, $7.75 million (plus interest) will be managed to restore, rehabilitate, replace, or acquire the equivalent of injured natural resources and/or the services they provide to compensate for natural resources adversely affected by PCBs in the Massachusetts watershed of the Housatonic River. The other $7.75 million will be managed under a separate program for compensatory restoration in the Connecticut watershed of the Housatonic River. This Draft PEA examines alternatives for implementing a compensatory restoration program in the Massachusetts portion of the Housatonic River watershed; implementation alternatives in the Connecticut portion will be examined in a later document.

The proposed Preferred Alternative in the Draft PEA is a restoration program featuring a mix of restoration approaches, including aquatic restoration, wildlife/terrestrial restoration, enhancement of recreational opportunities, and education/outreach initiatives. A mix of restoration approaches will allow the greatest degree of flexibility in the project selection process and will ensure the greatest environmental and socioeconomic benefits. This Draft PEA compares the preferred, blended restoration alternative with alternatives that focus on a single restoration approach, as well as with a no-action alternative in which no restoration is implemented with NRD funds.

Interested members of the public are invited to review and comment on the Draft PEA. Copies of the Draft PEA are available for review at public libraries in the towns of Great Barrington, Lee, Lenox, Pittsfield, Sheffield, and Stockbridge, Massachusetts. Additionally, the Draft PEA will be available for review at the following Web site: *http://www.ma-housatonicrestoration.org.* Written comments will be considered and addressed in the Final PEA as part of the restoration planning process.

Author: The primary author of this notice is Veronica Varela, U.S. Fish and Wildlife Service, New England Field Office, 70 Commercial Street, Suite 300, Concord, New Hampshire 03301.

Authority: The authorities for this action are the NRDAR provisions under the Comprehensive Environmental Response, Compensation, and Liability Act of 1980 (CERCLA, as amended, 42 U.S.C. 9601 *et seq.*) and the Clean Water Act (CWA, 33 U.S.C. 1251–1376), which allow natural resource trustees to bring claims against responsible parties to recover monies and take action to restore, replace, or acquire the equivalent of natural resources that have been injured by hazardous substances; the CERCLA NRDA regulations (43 CFR Part 11) that guide the allocation and expenditure of NRD recoveries for restoration activities; and the National Environmental Policy Act (42 U.S.C. 4321–4347).

Dated: October 18, 2005.

Richard O. Bennett,

Acting Regional Director, Region 5, U.S. Fish and Wildlife Service, U.S. Department of the Interior, DOI Authorized Official.

[FR Doc. 05–21692 Filed 10–31–05; 8:45 am]

BILLING CODE 4310–55–P

DEPARTMENT OF THE INTERIOR

Bureau of Land Management

[WO–310–06–1310–GEOT]

Implementation of the Geothermal Sections of the Energy Policy Act of 2005; Public Meeting

AGENCY: Bureau of Land Management, Interior.

ACTION: Notice of Public Meeting.

SUMMARY: A public meeting is being held by the Bureau of Land Management and the U.S. Forest Service to solicit suggestions from the public and industry on how to best implement the geothermal provisions of the Energy Policy Act of 2005.

DATES: The meeting date is scheduled as follows: November 17, 2005; 1–4 p.m., local time.

ADDRESSES: The meeting will be held at the following location: Reno Hilton Hotel, 2500 East 2nd Street, Reno, Nevada 89595.

FOR FURTHER INFORMATION CONTACT: John Bebout, National Geothermal Program Lead for the BLM at (202) 557–3375 or Bob Fujimoto, Geothermal Lead for the U.S. Forest Service at (503) 808–2430.

SUPPLEMENTARY INFORMATION: The meeting will begin with an overview of the geothermal provisions of the Energy Policy Act. Participants who request to speak will be given a set amount of time to provide suggestions that address

implementation as well as major areas of interest/concern with the geothermal sections of the Act.

Dated: October 26, 2005.

Thomas P. Lonnie,

Assistant Director, Minerals, Realty and Resource Protection.

[FR Doc. 05–21676 Filed 10–31–05; 8:45 am]

BILLING CODE 4310–84–P

DEPARTMENT OF THE INTERIOR

Bureau of Land Management

[CO–922–05–1310–FI; COC66816]

Notice of Proposed Reinstatement of Terminated Oil and Gas Lease COC66816

AGENCY: Bureau of Land Management; Interior.

ACTION: Notice of Proposed Reinstatement of Terminated Oil and Gas Lease.

SUMMARY: Pursuant to the provisions of 30 U.S.C. 188(d) and (e), and 43 CFR 3108.2–3(a) and (b)(1), a petition for reinstatement of oil and gas lease COC66816 for lands in Rio Blanco County, Colorado, was timely filed and was accompanied by all the required rentals accruing from the date of termination.

FOR FURTHER INFORMATION CONTACT: Bureau of Land Management, Beverly A. Derringer Chief, Fluid Minerals Adjudication, at 303.239.3765.

SUPPLEMENTARY INFORMATION: The lessee has agreed to the amended lease terms for rentals and royalties at rates of $5.00 per acre, or fraction thereof, per year and 16 2/3 percent, respectively. The lessee has paid the required $500 administrative fee and $155 to reimburse the Department for the cost of this Federal Register notice. The lessee has met all the requirements for reinstatement of the lease as set out in Section 31(d) and (e) of the Mineral Lands Leasing Act of 1920 (30 U.S.C. 188), and the Bureau of Land Management is proposing to reinstate lease COC66816 effective May 1, 2004, subject to the original terms and conditions of the lease and the increased rental and royalty rates cited above.

Dated: November 19, 2004.

Beverly A. Derringer,

Chief, Fluid Minerals Adjudication.

[FR Doc. 05–21739 Filed 10–31–05; 8:45 am]

BILLING CODE 4310–JB–P

DEPARTMENT OF THE INTERIOR

[MT–922–05–1310–FI–P; (MTM 93129)]

Notice of Proposed Reinstatement of Terminated Oil and Gas Lease MTM 93129

AGENCY: Bureau of Land Management, Interior.

ACTION: Notice.

SUMMARY: Per 30 U.S.C. 188(d), the lessee, Quicksilver Resources Inc. timely filed a petition for reinstatement of oil and gas lease MTM 93129, Hill County, Montana. The lessee paid the required rental accruing from the date of termination, April 1, 2005.

No leases were issued that affect these lands. The lessee agrees to new lease terms for rentals and royalties of $10 per acre and 16⅔ percent or 4 percentages above the existing competitive royalty rate. The lessee paid the $500 administration fee for the reinstatement of the lease and $155 cost for publishing this Notice.

The lessee met the requirements for reinstatement of the lease per Sec. 31(d) and (e) of the Mineral Leasing Act of 1920 (30 U.S.C. 188). We are proposing to reinstate the lease, effective the date of termination subject to:

- The original terms and conditions of the lease;
- The increased rental of $10 per acre;
- The increased royalty of 16⅔ percent or 4 percentages above the existing competitive royalty rate; and
- The $155 cost of publishing this Notice.

FOR FURTHER INFORMATION CONTACT: Karen L. Johnson, Chief, Fluids Adjudication Section, BLM Montana State Office, PO Box 36800, Billings, Montana 59107, 406–896–5098.

Dated: September 22, 2005.

Karen L. Johnson,

Chief, Fluids Adjudication Section.

[FR Doc. 05–21738 Filed 10–31–05; 8:45 am]

BILLING CODE 4310–$$–P

DEPARTMENT OF THE INTERIOR

Bureau of Land Management

[WY–920–1310–01; WYW 146279]

Notice of Proposed Reinstatement of Terminated Oil and Gas Lease

AGENCY: Bureau of Land Management, Interior.

ACTION: Notice of proposed reinstatement of terminated oil and gas lease.

SUMMARY: Under the provisions of 30 U.S.C. 188(d) and (e), and 43 CFR 3108.2–3(a) and (b)(1), the Bureau of Land Management (BLM) received a petition for reinstatement of oil and gas lease WYW146279 from Gulf Exploration LLC for lands in Converse County, Wyoming. The petition was filed on time and was accompanied by all the rentals due since the date the lease terminated under the law.

FOR FURTHER INFORMATION CONTACT: Bureau of Land Management, Pamela J. Lewis, Chief, Branch of Fluid Minerals Adjudication, at (307) 775–6176.

SUPPLEMENTARY INFORMATION: The lessee has agreed to the amended lease terms for rentals and royalties at rates of $10.00 per acre or fraction thereof, per year and 16⅔ percent, respectively. The lessee has paid the required $500 administrative fee and $166 to reimburse the Department for the cost of this **Federal Register** notice. The lessee has met all the requirements for reinstatement of the lease as set out in section 31(d) and (e) of the Mineral Lands Leasing Act of 1920 (30 U.S.C. 188), and the Bureau of Land Management is proposing to reinstate lease WYW146279 effective October 1, 2004, under the original terms and conditions of the lease and the increased rental and royalty rates cited above. BLM has not issued a valid lease affecting the lands.

Pamela J. Lewis,

Chief, Branch of Fluid Minerals Adjudication.

[FR Doc. 05–21740 Filed 10–31–05; 8:45 am]

BILLING CODE 4310–22–P

DEPARTMENT OF THE INTERIOR

Minerals Management Service

Outer Continental Shelf (OCS) Policy Committee; Notice and Agenda for Meeting

AGENCY: Minerals Management Service, Interior.

ACTION: Notice of meeting.

SUMMARY: The OCS Policy Committee meeting scheduled for November 15–16, 2005, at the Days Hotel and Conference Center at Dulles in Herndon, Virginia.

DATES: Tuesday, November 15, 2005, 8:30 a.m. to 5 p.m. and Wednesday, November 16, 2005, from 8:30 a.m. to 12:15 p.m.

ADDRESSES: The Days Hotel and Conference Center at Dulles, 2200 Centreville Road, Herndon, Virginia 20170, telephone (703) 471–6700.

FOR FURTHER INFORMATION CONTACT: Ms. Jeryne Bryant at Minerals Management

Service, 381 Elden Street, Mail Stop 4001, Herndon, Virginia 20170–4187. She can be reached by telephone at (703) 787–1211 or by electronic mail at *jeryne.bryant@mms.gov.*

SUPPLEMENTARY INFORMATION: The OCS Policy Committee represents the collective viewpoint of coastal states, local government, environmental community, industry and other parties involved with the OCS Program. It provides policy advice to the Secretary of the Interior through the Director of the MMS on all aspects of leasing, exploration, development, and protection of OCS resources.

The Agenda for Tuesday, November 15 Will Cover the Following Principal Subjects

Energy Policy Act of 2005. This presentation will address MMS responsibilities in implementing the provisions affecting the Outer Continental Shelf.

Coastal Impact Assistance Program. As authorized in the Energy Policy Act of 2005, MMS will implement a new program to distribute $1 billion to coastal States and localities for approved projects related to the conservation, restoration, or protection of coastal areas, wildlife, and natural resources.

OCS Renewable Energy and Alternative Use Program Approach. The Energy Policy Act of 2005 amended the OCS Lands Act to grant management authority to the Secretary of the Interior, and MMS will develop a new regulatory regime to manage access, balancing competing uses while ensuring appropriate environmental safeguards. This presentation will also address the draft report of the OCS Policy Committee's Alternative Energy/Use Subcommittee.

USGS/MMS Joint Session on the Marine Mapping Initiative. The presentation will address the history, intent, and status of ongoing efforts and the objectives of MMS and USGS initiatives within the Energy Bill as well as broader Federal coordination efforts.

Impact of Hurricanes on Energy Infrastructure and Outlook for Oil and Natural Gas Supplies. This presentation will address the status of oil and gas availability, the outlook for the future as affected by Hurricanes Rita and Katrina, and lessons learned.

Impact of 2004–2005 Gulf Coast Hurricanes on Coastal Environment. This presentation will address the impacts of Hurricanes Ivan, Dennis, Katrina, and Rita on coastal barrier islands, beaches, estuaries, wetlands, and other environments along the northern Gulf of Mexico coastal area from the Florida panhandle to Texas.

MMS Regional Issues. The Regional Directors will highlight activities of the Pacific, Alaska, and Gulf of Mexico regions.

The Agenda for Wednesday, November 16 Will Cover the Following Principal Subjects

OCS Scientific Committee Update. This presentation will address the current activities of the OCS Scientific Committee and its subcommittees.

Congressional Update. This presentation will address legislative activity pertinent to the OCS program.

5-Year OCS Oil and Gas Leasing Program 2007–2012. This presentation will address the steps for development of the next 5-Year Program (2007–2012), input received during the comment period, and the supporting Environmental Impact Statement.

Committee Business. Status reports from the OCS Policy Committee's 5-Year OCS Oil and Gas Leasing Program and Hard Minerals Subcommittees.

The meeting is open to the public. Approximately 100 visitors can be accommodated on a first-come-first-served basis.

Upon request, interested parties may make oral or written presentations to the OCS Policy Committee. Such requests should be made no later than November 10, 2005, to Jeryne Bryant. Requests to make oral statements should be accompanied by a summary of the statement to be made. Please see **FOR FURTHER INFORMATION CONTACT** section for address and telephone number.

Minutes of the OCS Policy Committee meeting will be available for public inspection and copying at the MMS in Herndon, Virginia.

Authority: Federal Advisory Committee Act, Pub. L. No. 92–463, 5 U.S.C. Appendix 1, and the Office of Management and Budget's Circular No. A–63, Revised.

Dated: October 26, 2005.

Thomas A. Readinger,

Associate Director for Offshore Minerals Management.

[FR Doc. 05–21765 Filed 10–31–05; 8:45 am]

BILLING CODE 4310–MR–P

NATIONAL FOUNDATION ON THE ARTS AND THE HUMANITIES

National Endowment for the Arts; Arts Advisory Panel

Pursuant to Section 10(a)(2) of the Federal Advisory Committee Act (Pub. L. 92–463), as amended, notice is hereby given that one meeting of the Arts Advisory Panel to the National Council on the Arts will be held at the Nancy Hanks Center, 1100 Pennsylvania Avenue, NW., Washington, DC, 20506 as follows:

National Initiatives (application review): November 17–18, 2005 in Room 714. A portion of this meeting, from 5:30 p.m. to 5:45 p.m. on Friday, November 18th, will be open to the public for policy discussion. The remainder of the meeting, from 8:15 a.m. to 6 p.m. on November 17th and from 8:15 a.m. to 5:30 p.m. and from 5:45 p.m. to 6:15 p.m. on November 18th, will be closed.

The closed portions of meetings are for the purpose of Panel review, discussion, evaluation, and recommendations on financial assistance under the National Foundation on the Arts and the Humanities Act of 1965, as amended, including information given in confidence to the agency. In accordance with the determination of the Chairman of April 8, 2005, these sessions will be closed to the public pursuant to subsection (c)(6) of section 552b of Title 5, United States Code.

Any person may observe meetings, or portions thereof, of advisory panels that are open to the public, and if time allows, may be permitted to participate in the panel's discussions at the discretion of the panel chairman. If you need special accommodations due to a disability, please contact the Office of AccessAbility, National Endowment for the Arts, 1100 Pennsylvania Avenue, NW., Washington, DC 20506, 202/682–5532, TDY–TDD 202/682–5496, at least seven (7) days prior to the meeting.

Further information with reference to these meetings can be obtained from Ms. Kathy Plowitz-Worden, Office of Guidelines & Panel Operations, National Endowment for the Arts, Washington, DC, 20506, or call 202/682–5691.

Dated: October 26, 2005.

Kathy Plowitz-Worden,

Panel Coordinator, Panel Operations, National Endowment for the Arts.

[FR Doc. 05–21736 Filed 10–31–05; 8:45 am]

BILLING CODE 7537–01–U

NUCLEAR REGULATORY COMMISSION

Rulemaking To Establish a Regulatory Framework for the Expanded Definition of Byproduct Material Established by the Energy Policy Act; Meeting

AGENCY: Nuclear Regulatory Commission.

ACTION: Notice of meeting.

SUMMARY: Section 651(e) of the Energy Policy Act of 2005 expanded the definition of byproduct material as defined in the Atomic Energy Act of 1954, as amended. To comply with the Congressional mandate, the Nuclear Regulatory Commission (NRC) is changing its regulations to expand the definition of byproduct material to include the following materials produced, extracted, or converted after extraction for use for commercial, medical, or research activities: (1) Discrete sources of radium-226, (2) accelerator-produced radioactive material, and (3) discrete sources of naturally occurring radioactive material, other than source material, that the Commission, in consultation with the Administrator of the Environmental Protection Agency, the Secretary of Energy, the Secretary of Homeland Security, and other appropriate Federal agencies, determines would pose a threat to public health and safety or the common defense and security similar to the threat posed by a discrete source of radium-226. To aid in the rulemaking process, NRC is holding a public meeting with a ''roundtable'' format (defined further in the body of this notice) to solicit input, that may be useful in drafting a proposed rule, from stakeholders. The meeting is open to the public, and all interested parties may attend. Individuals unable to attend the meeting will be able to listen by teleconference.

DATES: November 9, 2005, from 9 a.m. to 4 p.m. Registration is from 8:30 a.m. to 9 a.m.; however, all persons planning to attend the meeting are encouraged to preregister in order to facilitate security check-in on the day of the meeting.

ADDRESSES: Nuclear Regulatory Commission, Two White Flint North, Room T–2B3, 11545 Rockville Pike, Rockville, Maryland.

FOR FURTHER INFORMATION CONTACT: Leslie Kerr, telephone (301) 415–6272, e-mail *lsk@nrc.gov*, of the Office of Nuclear Material Safety and Safeguards, U.S. Nuclear Regulatory Commission, Washington, DC 20555–0001. Questions on the meeting format, including participation in the roundtable, should be directed to the meeting facilitator, Francis ''Chip'' Cameron. Mr. Cameron can be reached at 301–415–1642 or *fxc@nrc.gov*. To preregister to attend the meeting in person or to participate via teleconference, please contact Jayne McCausland, telephone (301) 415–6219, fax (301) 415–5369, or e-mail *jmm2@nrc.gov*.

SUPPLEMENTARY INFORMATION: Section 651(e) of the Energy Policy Act of 2005 (the Act) expanded the definition of byproduct material in Section 11e. of the Atomic Energy Act of 1954 to include certain naturally occurring and accelerator produced radioactive material (NARM) and required the NRC to provide a regulatory framework for licensing and regulating the additional byproduct material. The NRC is conducting a rulemaking to revise its regulations to expand the definition of byproduct material to include: (1) Any discrete source of radium-226 that is produced, extracted, or converted after extraction for use for commercial, medical, or research activities; (2) accelerator-produced radioactive material that is produced, extracted, or converted after extraction for use for commercial, medical, or research activities; and (3) any discrete source of naturally occurring radioactive material, other than source material, that is extracted or converted after extraction for use for commercial, medical, or research activities that the Commission determines, in consultation with the Administrator of the Environmental Protection Agency, the Secretary of Energy, the Secretary of Homeland Security, and the head of any other appropriate Federal agency, would pose a threat to public health and safety or the common defense and security similar to the threat posed by discrete sources of radium-226.

NRC is holding a public meeting on November 9, 2005 to solicit input from stakeholders on the regulation of NARM. The format for this public meeting will be a ''roundtable'' format. Participants at the roundtable will be the invited representatives of the broad spectrum of interests who may be affected by this rulemaking. The roundtable format is being used for this meeting to promote a dialogue among the representatives at the table on the issues of concern. Although the focus of the discussion will be on the invited participants at the table, an opportunity will be provided for comment and questions from the audience. Questions on the meeting format, including participation in the roundtable, should be directed to the meeting facilitator, Francis ''Chip'' Cameron. Mr. Cameron can be reached at 301–415–1642 or *fxc@nrc.gov*. An agenda for the meeting will be posted to the NRC's rulemaking website: *http://ruleforum.llnl.gov*.

Those planning to attend the meeting are encouraged to preregister for the meeting by notifying Ms. Jayne M. McCausland, telephone (301) 415–6219, fax (301) 415–5369, or e-mail *jmm2@nrc.gov*. If an attendee will require special services, such as services for the hearing impaired, please notify Ms. McCausland of these requirements when preregistering. Individuals unable to attend the meeting will be able to listen by teleconference. For teleconference information, please contact Ms. McCausland.

The NRC is accessible to the White Flint Metro Station. Visitor parking near the NRC buildings is limited.

Dated at Rockville, Maryland, this 20th day of October, 2005.

For the Nuclear Regulatory Commission.

Charles L. Miller,

Director, Division of Industrial and Medical Nuclear Safety, Office of Nuclear Material Safety and Safeguards.

[FR Doc. E5–6021 Filed 10–31–05; 8:45 am]

BILLING CODE 7590–01–P

NUCLEAR REGULATORY COMMISSION

Advisory Committee on Reactor Safeguards; Meeting of the ACRS Subcommittee on Reliability and Probabilistic Risk Assessment; Notice of Meeting

The ACRS Subcommittee on Reliability and Probabilistic Risk Assessment (PRA) will hold a meeting on November 17–18, 2005, Room T–2B3, 11545 Rockville Pike, Rockville, Maryland.

The entire meeting will be open to public attendance.

The agenda for the subject meeting shall be as follows:

Thursday, November 17, 2005—8:30 a.m. until the conclusion of business.

Friday, November 18, 2005—8:30 a.m. until the conclusion of business

The purpose of this meeting is to discuss the details of the Standardized Plant Analysis Risk (SPAR) program.

The Subcommittee will hear presentations by and hold discussions with representatives of the NRC staff, and their contractors regarding this matter. The Subcommittee will gather information, analyze relevant issues and facts, and formulate proposed positions and actions, as appropriate, for deliberation by the full Committee.

Members of the public desiring to provide oral statements and/or written comments should notify the Designated Federal Official, Mr. Eric A. Thornsbury, (Telephone: 301–415–8716) five days prior to the meeting, if possible, so that appropriate arrangements can be made. Electronic recordings will be permitted.

Further information regarding this meeting can be obtained by contacting the Designated Federal Official between 7:30 a.m. and 4:15 p.m. (ET). Persons planning to attend this meeting are

urged to contact the above named individual at least two working days prior to the meeting to be advised of any potential changes to the agenda.

Dated: October 25, 2005.

Michael L. Scott,

Branch Chief, ACRS/ACNW.

[FR Doc. E5–6020 Filed 10–31–05; 8:45 am]

BILLING CODE 7590–01–P

SECURITIES AND EXCHANGE COMMISSION

[File No. 1–06732]

Issuer Delisting; Notice of Application of Covanta Holding Corporation To Withdraw its Common Stock, $.10 Par Value, From Listing and Registration on the American Stock Exchange LLC

October 25, 2005.

On September 23, 2005, Covanta Holding Corporation, a Delaware corporation (''Issuer''), filed an application with the Securities and Exchange Commission (''Commission''), pursuant to Section 12(d) of the Securities Exchange Act of 1934 (''Act'') [1] and Rule 12d2–2(d) thereunder,[2] to withdraw its common stock, $.10 par value (''Security''), from listing and registration on the American Stock Exchange LLC (''Amex'').

On September 16, 2005, the Board of Directors (''Board'') of the Issuer approved resolutions to withdraw the Security from listing and registration on Amex and to list the Security on the New York Stock Exchange, Inc. (''NYSE''). The Issuer stated that the Board determined that it is in the best interest of the Issuer to list the Security on NYSE, and is withdrawing the Security on Amex in order to avoid direct and indirect costs and the division of the market resulting from dual listing on Amex and NYSE.

The Issuer stated in its application that it has met the requirements of Amex Rule 18 by complying with all applicable laws in effect in the state of Delaware, in which it is incorporated, and provided written notice of withdrawal to Amex.

The Issuer's application relates solely to the withdrawal of the Security from listing on Amex, and shall not affect its continued listing on NYSE or its obligation to be registered under Section 12(b) of the Act.[3]

Any interested person may, on or before November 15, 2005, comment on the facts bearing upon whether the application has been made in accordance with the rules of Amex, and what terms, if any, should be imposed by the Commission for the protection of investors. All comment letters may be submitted by either of the following methods:

Electronic Comments

- Use the Commission's Internet comment form (*http://www.sec.gov/rules/delist.shtml*); or
- Send an e-mail to *rule-comments@sec.gov*. Please include the File Number 1–06732 or;

Paper Comments

- Send paper comments in triplicate to Jonathan G. Katz, Secretary, Securities and Exchange Commission, Station Place, 100 F Street, NE., Washington, DC 20549–9303.

All submissions should refer to File Number 1–06732. This file number should be included on the subject line if e-mail is used. To help us process and review your comments more efficiently, please use only one method. The Commission will post all comments on the Commission's Internet Web site (*http://www.sec.gov/rules/delist.shtml*). Comments are also available for public inspection and copying in the Commission's Public Reference Room. All comments received will be posted without change; we do not edit personal identifying information from submissions. You should submit only information that you wish to make available publicly.

The Commission, based on the information submitted to it, will issue an order granting the application after the date mentioned above, unless the Commission determines to order a hearing on the matter.

For the Commission, by the Division of Market Regulation, pursuant to delegated authority.[4]

Jonathan G. Katz,

Secretary.

[FR Doc. E5–6017 Filed 10–31–05; 8:45 am]

BILLING CODE 8010–01–P

[1] 15 U.S.C. 78*l*(d).

[2] 17 CFR 240.12d2–2(d).

[3] 15 U.S.C. 78*l*(b).

[4] 17 CFR 200.30–3(a)(1).

SECURITIES AND EXCHANGE COMMISSION

[File No. 1–08610]

Issuer Delisting; Notice of Application of SBC Communications Inc. To Withdraw Its Common Stock, $1.00 Par Value, From Listing and Registration on the Chicago Stock Exchange, Inc.

October 25, 2005.

On September 22, 2005, SBC Communications Inc., a Delaware corporation (''Issuer''), filed an application with the Securities and Exchange Commission (''Commission''), pursuant to Section 12(d) of the Securities Exchange Act of 1934 (''Act'') [1] and Rule 12d2–2(d) thereunder,[2] to withdraw its common stock, $1.00 par value (''Security''), from listing and registration on the Chicago Stock Exchange, Inc. (''CHX'').

The Board of Directors (''Board'') of the Issuer approved a resolution on July 23, 2003 to, among other things, authorize certain officers of the Issuer to list or delist any of the Issuer's securities on or from any United States or foreign exchange, except to delist the Security from the New York Stock Exchange, Inc. (''NYSE''). The Issuer stated that the following reasons factored into its decision to withdraw the Security from CHX. First, the Issuer stated that the Security only infrequently trades on CHX. Over the past 12 months, shares of the Security traded on CHX represented 2% of the total shares of the Security traded on all national exchanges. Substantially all of the Security is traded on NYSE and in the over-the-counter market. Second, the Issuer intends to continue listing the Security on NYSE. The Security is registered under Section 12(b) of the Act,[3] and the Issuer is subject to the periodic and current reporting requirements under Section 13 of the Act.[4] Third, the continued listing of the Security is costly and unjustified, in the Issuer's opinion, in light of the limited trading volume of the Security.

The Issuer stated in its application that it has complied with applicable rules of CHX by complying with all applicable laws in the State of Delaware, the state in which the Issuer is incorporated, and by providing CHX with the required documents governing the withdrawal of securities from listing and registration on CHX. The Issuer's application relates solely to the withdrawal of the Security from listing

[1] 15 U.S.C. 78*l*(d).

[2] 17 CFR 240.12d2–2(d).

[3] 15 U.S.C. 78*l*(b).

[4] 15 U.S.C. 78m.

on CHX and shall not affect its continued listing on NYSE of the Pacific Exchange, Inc. (''PCX''),[5] or its obligation to be registered under Section 12(b) of the Act.[6]

Any interested person may, on or before November 15, 2005, comment on the facts bearing upon whether the application has been made in accordance with the rules of CHX, and what terms, if any, should be imposed by the Commission for the protection of investors. All comment letters may be submitted by either of the following methods:

Electronic Comments

• Send an e-mail to *rule-comments@sec.gov*. Please include the File Number 1–08610 or;

Paper Comments

• Send paper comments in triplicate to Jonathan G. Katz, Secretary, Securities and Exchange Commission, 100 F Street, NE., Washington, DC 20549–9303.

All submissions should refer to File Number 1–08610. This file number should be included on the subject line if e-mail is used. To help us process and review your comments more efficiently, please use only one method. The Commission will post all comments on the Commission's Internet Web site (*http://www.sec.gov/rules/delist.shtml*). Comments are also available for public inspection and copying in the Commission's Public Reference Room. All comments received will be posted without change; we do not edit personal identifying information from submissions. You should submit only information that you wish to make available publicly.

The Commission, based on the information submitted to it, will issue an order granting the application after the date mentioned above, unless the Commission determines to order a hearing on the matter.

For the Commission, by the Division of Market Regulation, pursuant to delegated authority.[7]

Jonathan G. Katz,

Secretary.

[FR Doc. E5–6018 Filed 10–31–05; 8:45 am]

BILLING CODE 8010–01–P

[5] On September 22, 2005, the Issuer filed an application with the Commission to withdraw the Security from listing and registration on PCX. Notice of such application will be published separately.

[6] 15 U.S.C. 78*l*(b).

[7] CFR 200.30–3(a)(1).

SECURITIES AND EXCHANGE COMMISSION

[File No. 1–08610]

Issuer Delisting; Notice of Application of SBC Communications Inc. To Withdraw Its Common Stock, $1.00 Par Value, From Listing and Registration on the Pacific Exchange, Inc.

October 25, 2005.

On September 22, 2005, SBC Communications Inc., a Delaware corporation (''Issuer''), filed an application with the Securities and Exchange Commission (''Commission''), pursuant to Section 12(d) of the Securities Exchange Act of 1934 (''Act'')[1] and Rule 12d2–2(d) thereunder,[2] to withdraw its common stock, $1.00 par value (''Security''), from listing and registration on the Pacific Exchange, Inc. (''PCX'').

The Board of Directors (''Board'') of the Issuer approved a resolution on July 23, 2003 to, among other things, authorize certain officers of the Issuer to list or delist any of the Issuer's securities on or from any United States or foreign exchange, except to delist the Security from the New York Stock Exchange, Inc. (''NYSE''). The Issuer stated that the following reasons factored into its decision to withdraw the Security from PCX. First, the Issuer stated that the Security only infrequently trades on Archipelago Exchange (''ArcaEx''), the trading facility of PCX. Over the past 12 months, shares of the Security traded on ArcaEx represented 1.2% of the total shares of the Security traded on all national exchanges. Substantially all of the Security is traded on NYSE and in the over-the-counter market. Second, the Issuer intends to continue listing the Security on NYSE. The Security is registered under Section 12(b) of the Act,[3] and the Issuer is subject to the periodic and current reporting requirements under Section 13 of the Act.[4] Third, the continued listing of the Security is costly and unjustified, in the Issuer's opinion, in light of the limited trading volume of the Security.

The Issuer stated in its application that it has complied with applicable rules of PCX by complying with all applicable laws in the State of Delaware, the state in which the Issuer is incorporated, and by providing PCX with the required documents governing the withdrawal of securities from listing and registration on PCX. The Issuer's application relates solely to the withdrawal of the Security from listing on PCX and shall not affect its continued listing on NYSE or the Chicago Stock Exchange, Inc., (''CHX''),[5] or its obligation to be registered under Section 12(b) of the Act.[6]

Any interested person may, on or before November 15, 2005, comment on the facts bearing upon whether the application has been made in accordance with the rules of PCX, and what terms, if any, should be imposed by the Commission for the protection of investors. All comment letters may be submitted by either of the following methods:

Electronic Comments

• Send an e-mail to *rule-comments@sec.gov*. Please include the File Number 1–08610 or;

Paper Comments

• Send paper comments in triplicate to Jonathan G. Katz, Secretary, Securities and Exchange Commission, 100 F Street, NE.,Washington, DC 20549–9303.

All submissions should refer to File Number 1–08610. This file number should be included on the subject line if e-mail is used. To help us process and review your comments more efficiently, please use only one method. The Commission will post all comments on the Commission's Internet Web site (*http://www.sec.gov/rules/delist.shtml*). Comments are also available for public inspection and copying in the Commission's Public Reference Room. All comments received will be posted without change; we do not edit personal identifying information from submissions. You should submit only information that you wish to make available publicly.

The Commission, based on the information submitted to it, will issue an order granting the application after the date mentioned above, unless the Commission determines to order a hearing on the matter.

For the Commission, by the Division of Market Regulation, pursuant to delegated authority.[7]

Jonathan G. Katz,

Secretary.

[FR Doc. E5–6019 Filed 10–31–05; 8:45 am]

BILLING CODE 8010–01–P

[1] 15 U.S.C. 78*l*(d).

[2] 17 CFR 240.12d2–2(d).

[3] 15 U.S.C. 78*l*(b).

[4] 15 U.S.C. 78m.

[5] On September 22, 2005, the Issuer filed an application with the Commission to withdraw the Security from listing and registration on CHX. Notice of such application will be published separately.

[6] 15 U.S.C. 78*l*(b).

[7] 17 CFR 200.30–3(a)(1).

SECURITIES AND EXCHANGE COMMISSION

[Release No. IC–27120; 812–12934]

Gladstone Capital Corporation, et al.; Notice of Application

October 25, 2005.

AGENCY: Securities and Exchange Commission (''Commission'').

ACTION: Notice of application for an order under section 57(i) of the Investment Company Act of 1940 (the ''Act'') and rule 17d-1 under the Act to permit certain joint transactions otherwise prohibited by section 57(a)(4) of the Act and under section 17(d) of the Act and rule 17d-1 under the Act authorizing certain joint transactions.

Summary of Application: Applicants requests an order to permit Gladstone Capital Corporation and Gladstone Investment Corporation, both business development companies (''BDCs''), and certain registered closed-end investment companies, to co-invest with an affiliate in portfolio companies.

Applicants: Gladstone Capital Corporation (''GCC''), Gladstone Investment Corporation (''GIC''), Gladstone Partners Fund LP (''Partners''), Gladstone Management Corporation (''GMC'') and Gladstone General Partner, LLC.

Filing Dates: The application was filed on February 27, 2003 and amended on October 24, 2005.

Hearing or Notification of Hearing: An order granting the requested relief will be issued unless the Commission orders a hearing. Interested persons may request a hearing by writing to the Commission's Secretary and serving applicants with a copy of the request, personally or by mail. Hearing requests should be received by the Commission by 5:30 p.m. on November 21, 2005, and should be accompanied by proof of service on applicants, in the form of an affidavit or, for lawyers, a certificate of service. Hearing requests should state the nature of the writer's interest, the reason for the request, and the issues contested. Persons who wish to be notified of a hearing may request notification by writing to the Commission's Secretary.

ADDRESSES: Secretary, U.S. Securities and Exchange Commission, 100 F St., NE., Washington, DC 20549–9303. Applicants: c/o R. Charles Miller, Esq., Kirkpatrick & Lockhart Nicholson Graham LLP, 1800 Massachusetts Avenue, NW., Suite 200, Washington, DC 20036.

FOR FURTHER INFORMATION CONTACT: Marilyn Mann, Senior Counsel, at (202) 551–6813, or Mary Kay Frech, Branch Chief, at (202) 551–6821 (Office of Investment Company Regulation, Division of Investment Management).

SUPPLEMENTARY INFORMATION: The following is a summary of the application. The complete application may be obtained for a fee at the Commission's Public Reference Branch, 100 F St., NE., Washington, DC 20549–0102 (tel. 202–551–5850).

Applicants' Representations

1. GCC is a closed-end management investment company that has elected to be regulated as a BDC under the Act. GCC's investment objective is to achieve a high level of current income by investing in debt securities, such as senior notes, senior subordinated notes and subordinated notes, with particular emphasis on senior subordinated notes, of established private businesses that are backed by leveraged buyout funds, venture capital funds or others. In connection with the transactions in which GCC would purchase debt securities, it would generally expect to receive interests, such as warrants or conversion privileges, in the issuers' common equity, which offer the potential of long-term appreciation. GCC has entered into a combined investment advisory and administration agreement with GMC.

2. Partners will be organized as a limited liability company, limited liability company interests of which will be placed privately with institutional investors, and will be excluded from the definition of investment company by section 3(c)(1) of the Act. Partners' investment objective will be similar to that of GCC. Gladstone General Partner, LLC, is the general partner of Partners. Upon completion of its private placement, Partners will enter into an advisory agreement with GMC and an administration agreement with Gladstone Administration, LLC (''Gladstone Administration''), which is a wholly owned subsidiary of GMC.

3. GIC is a recently organized closed-end management investment company that has elected to be regulated as a BDC. GIC's investment objective is to generate both current income and capital gains through debt and equity investments. GIC has entered into an investment advisory agreement with GMC and has entered into an administration agreement with Gladstone Administration.

4. GMC is an investment adviser registered under the Investment Advisers Act of 1940. The investment advisory agreements between GMC and GCC and between GMC and GIC, among other things, require GMC to make available significant managerial assistance to the portfolio companies of GCC and GIC. GMC may in the future provide investment advisory services to other closed-end management investment companies that elect to be regulated as BDCs or other registered closed-end management investment companies (the ''Future Co-Investors'' and together with GIC and GCC, the ''Investors''). The applicants request that the relief apply to the Future Co-Investors, which will comply with the terms and conditions of the application.

5. Applicants request relief permitting GCC, GIC and any Future Co-Investor to make co-investments with Partners (''Co-investment Transactions''). The requested order will not extend to any transaction in which more than one Investor is a participant.

Applicants' Legal Analysis

1. Section 57(a)(4) of the Act prohibits certain affiliated persons of a BDC from participating in a joint transaction with the BDC in contravention of rules as prescribed by the Commission. In addition, under section 57(b)(2) of the Act, any person who is directly or indirectly controlling, controlled by or under common control with a BDC is subject to section 57(a)(4). Applicants state that Partners is under common control with each of the Investors and therefore is subject to section 57(a)(4). Section 57(i) of the Act provides that, until the Commission prescribes rules under section 57(a)(4), the Commission's rules under section 17(d) of the Act applicable to registered closed-end investment companies will be deemed to apply. Because the Commission has not adopted any rules under section 57(a)(4), rule 17d–1 applies.

2. Section 17(d) of the Act and rule 17d–1 under the Act prohibit affiliated persons of a registered investment company from participating in joint transactions with the company unless the Commission has granted an order permitting such transactions. Because certain of the Future Co–Investors may be registered closed-end investment companies, section 17(d) and rule 17d–1 apply. In passing upon applications under rule 17d–1, the Commission considers whether the company's participation in the joint transactions is consistent with the provisions, policies, and purposes of the Act and the extent to which such participation is on a basis different from or less advantageous than that of other participants.

3. Applicants state that allowing co-investment between GCC or GIC and Partners and the Future Co-Investors

and Partners will provide a substantial benefit to GCC's, GIC's and the Future Co-Investors' stockholders by making available greater resources that will allow applicants to obtain access to more attractive investment opportunities.

4. Applicants state that the terms and conditions set forth in the application ensure that the terms on which co-investments may be made will be identical, thus protecting the stockholders of any Investor from being disadvantaged. Applicants state that the proposed relief is consistent with rule 17d–1 in that the participation of the Investors will not be on a basis different from or less advantageous than that of Partners.

Applicants' Conditions

Applicants agree that the order granting the requested relief will be subject to the following conditions:

1. The requested order will not extend to any transaction in which more than one Investor is a participant.

2.(a) If considering an investment opportunity that may constitute a Co-investment Transaction, GMC will make an independent determination of the appropriateness of the Investor's participation in such transaction in light of the Investor's then-current circumstances.

(b) If GMC deems the Investor's participation in any such investment opportunity to be appropriate for the Investor, it will then determine an appropriate level of investment for the Investor. If the aggregate amount recommended by GMC to be invested by the Investor in such Co-investment Transaction, together with the amount proposed to be invested by Partners in the same transaction, exceeds the amount of the investment opportunity, the amount proposed to be invested by each such party will be allocated among them pro rata based on the ratio of each party's total assets to the aggregated total assets of both parties, up to the amount proposed to be invested by each. GMC will provide the required majority (as defined in section 57(o) of the Act) (''Required Majority'') with information concerning Partners' total assets to assist the Required Majority with their review of the Investor's investments for compliance with these allocation procedures.

(c) After making the determinations required in (a) and (b) above, GMC will distribute written information concerning the Co-investment Transaction, including the amount proposed to be invested by Partners, to the non-interested directors for their consideration. The Investor will co-invest with Partners only if, prior to the Investor's participation in the Co-investment Transaction, a Required Majority concludes that:

(i) The terms of the transaction, including the consideration to be paid, are reasonable and fair and do not involve overreaching of the Investor or its stockholders on the part of any person concerned;

(ii) The transaction is consistent with

(A) The interests of the stockholders of the Investor; and

(B) The Investor's investment objectives and strategies (as described in the Investor's registration statements on Form N–2 and other filings made with the Commission by the Investor under the Securities Act of 1933, as amended, any reports filed by the Investor with the Commission under the Securities Exchange Act of 1934, as amended, and the Investor's reports to stockholders);

(iii) The investment by Partners would not disadvantage the Investor, and participation by the Investor is not on a basis different from or less advantageous than that of Partners; *provided,* that if Partners, but not the Investor, gains the right to nominate a director for election to a portfolio company's board of directors or the right to have a board observer or any similar right to participate in the governance or management of the portfolio company, such event shall not be interpreted to prohibit the Required Majority from reaching the conclusions required by this condition (2)(c)(iii), if

(A) The Required Majority shall have the right to ratify the selection of such director or board observer, if any; and

(B) GMC agrees to, and does, provide, periodic reports to the Investor's Board of Directors with respect to the actions of such director or the information received by such board observer or obtained through the exercise of any similar right to participate in the governance or management of the portfolio company; and

(iv) The proposed investment by the Investor will not benefit GMC or Partners or any affiliated person of either of them (other than Partners), except to the extent permitted under sections 17(e) and 57(k) of the Act.

(d) The Investor has the right to decline to participate in any Co-investment Transaction or to invest less than the amount proposed to the Investor.

(e) GMC will present to the Board of Directors, on a quarterly basis, a record of all investments made by Partners during the preceding quarter that fell within the Investor's then current investment objectives that were not made available to the Investor, and an explanation of why the investment opportunities were not offered to the Investor. All information presented to the Board of Directors pursuant to this condition will be kept for the life of the Investor and at least two years thereafter, and will be subject to examination by the Commission and its staff.

3. Except for follow-on investments made pursuant to condition 6 below, the Investor will not invest in any portfolio company in which GMC or Partners or any affiliated person of either of them is an existing investor.

4. The Investor will not participate in any Co-investment Transaction unless the terms, conditions, price, class of securities to be purchased, settlement date, and registration rights will be the same for the Investor and Partners. The grant to Partners, but not the Investor, of the right to nominate a director for election to a portfolio company's board of directors, the right to have an observer on the board of directors or similar rights to participate in the governance or management of the portfolio company will not be interpreted so as to violate this condition 4, if conditions 2(c)(iii)(A) and (B) are met.

5. If Partners elects to sell, exchange or otherwise dispose of an interest in a security that was acquired by the Investor and Partners in a Co-investment Transaction, GMC will

(a) Notify the Investor of the proposed disposition at the earliest practical time; and

(b) Formulate a recommendation as to participation by the Investor in any such disposition and provide a written recommendation to the non-interested directors.

The Investor will have the right to participate in such disposition on a proportionate basis, at the same price and on the same terms and conditions as those applicable to Partners. The Investor will participate in such disposition to the extent that a Required Majority determines that it is in the Investor's best interests to do so. The Investor and Partners will each bear its own expenses in connection with any such disposition.

6. If Partners desires to make a ''follow-on investment'' (*i.e.*, an additional investment in the same entity) in a portfolio company whose securities were acquired by the Investor and Partners in a Co-investment Transaction or to exercise warrants or other rights to purchase securities of the issuer, GMC will

(a) Notify the Investor of the proposed transaction at the earliest practical time; and

(b) Formulate a recommendation as to the proposed participation, including the amount of the proposed follow-on investment, by the Investor and provide the recommendation to the non-interested directors.

The non-interested directors will make their own determination with respect to follow-on investments. To the extent that

(i) The amount of a follow-on investment opportunity is not based on the Investor's and Partners' initial investments; and

(ii) The aggregate amount recommended by GMC to be invested by the Investor in such follow-on investment, together with the amount proposed to be invested by Partners in the same transaction, exceeds the amount of the follow-on investment opportunity, the amount invested by each such party will be allocated among them *pro rata* based on the ratio of each party's total assets to the aggregated total assets of both parties, up to the maximum amount to be invested by each. The Investor will participate in such investment to the extent that the Required Majority determines that it is in the Investor's best interest. The acquisition of follow-on investments as permitted by this condition will be subject to the other conditions set forth in the application.

7. The non-interested directors will be provided quarterly for review all information concerning Co-investment Transactions, including investments made by Partners which the Investor considered but declined to participate, so that the non-interested directors may determine whether all investments made during the preceding quarter, including those investments which the Investor considered but declined to participate, comply with the conditions of the order. In addition, the non-interested directors will consider at least annually the continued appropriateness of the standards established for co-investments by the Investor, including whether the use of the standards continues to be in the best interests of the Investor and its shareholders and does not involve overreaching on the part of any person concerned.

8. The Investor will maintain the records required by section 57(f)(3) of the Act as if each of the investments permitted under these conditions were approved by the non-interested directors under section 57(f).

9. No non-interested director will also be a director, general partner or principal, or otherwise an ''affiliated person'' (as defined in the Act) of, Partners.

10. The expenses, if any, associated with acquiring, holding or disposing of any securities acquired in a Co-investment Transaction (including, without limitation, the expenses of the distribution of any such securities registered for sale under the Securities Act of 1933) shall, to the extent not payable solely by GMC under its investment advisory agreements with the Investor and Partners, be shared by the Investor and Partners in proportion to the relative amounts of their securities to be acquired or disposed of, as the case may be, by the Investor and Partners.

11. Any transaction fee (including break-up or commitment fees but excluding broker's fees contemplated by section 17(e)(2) of the Act) received in connection with a Co-investment Transaction will be distributed to the Investor and Partners on a *pro rata* basis based on the amount they invested or committed, as the case may be, in such Coinvestment Transaction. If any transaction fee is to be held by GMC pending consummation of the transaction, the fee will be deposited into an account maintained by GMC at a bank or banks having the qualifications prescribed in section 26(a)(1) of the Act, and the account will earn a competitive rate of interest that will also be divided *pro rata* between the Investor and Partners based on the amount they invest in such Coinvestment Transaction. Partners, GMC or any affiliated person of the Investor will not receive additional compensation or remuneration of any kind (other than (i) the *pro rata* transaction fees described above and (ii) investment advisory fees paid in accordance with investment advisory agreements with the Investor and Partners) as a result of or in connection with a Co-investment Transaction.

12. The Board of Directors of each Investor will satisfy the fund governance standards as defined in rule 0–1(a)(7) under the Act by the compliance date for the rule.

For the Commission, by the Division of Investment Management, under delegated authority.

Jonathan G. Katz,

Secretary.

[FR Doc. E5–6015 Filed 10–31–05; 8:45 am]

BILLING CODE 8010–01–P

SECURITIES AND EXCHANGE COMMISSION

[Release No. 34–52657; SR–Amex–2005–047; SR–BSE–2005–39; SR–CBOE–2005–68; SR–ISE–2005–42; SR–PCX–2005–104; SR–Phlx–2005–27]

Self-Regulatory Organizations; Order Approving a Proposed Rule Change and Amendment No. 1 by the American Stock Exchange LLC; a Proposed Rule Change by the Boston Stock Exchange, Inc.; a Proposed Rule Change by the Chicago Board Options Exchange, Incorporated; a Proposed Rule Change and Amendment No. 1 by the International Securities Exchange, Inc.; a Proposed Rule Change by the Pacific Exchange, Inc.; and a Proposed Rule Change and Amendment No. 1 by the Philadelphia Stock Exchange, Inc. Relating to the Definition of Firm Customer Quote Size and Limitations on Sending Secondary P/A Orders

October 24, 2005.

I. Introduction

On April 26, 2005, April 28, 2005, August 29, 2005, August 31, 2005, September 7, 2005, and September 13, 2005, the Philadelphia Stock Exchange, Inc. (''Phlx''), the American Stock Exchange LLC (''Amex''), the Chicago Board Options Exchange, Incorporated (''CBOE''), the International Securities Exchange, Inc. (''ISE''), the Pacific Exchange, Inc. (''PCX''), and the Boston Stock Exchange, Inc. (''BSE'') (collectively, the ''Options Exchanges''), respectively, filed with the Securities and Exchange Commission (''Commission''), pursuant to section 19(b)(1) of the Securities Exchange Act of 1934 (''Act'') [1] and Rule 19b–4 thereunder,[2] proposed rule changes to amend each of their respective rules governing the operation of the intermarket option linkage (''Linkage'') to conform with a proposed amendment [3] to the Plan for the Purpose of Creating and Operating an Intermarket Option Linkage (''Linkage Plan'').[4] Each of the Exchanges is

[1] 15 U.S.C. 78s(b)(1).

[2] 17 CFR 240.19b–4.

[3] *See* Securities Exchange Act Release No. 52401 (September 9, 2005), 70 FR 54781 (September 16, 2005) (File No. 4–429) (''Amendment No. 16'').

[4] On July 28, 2000, the Commission approved a national market system plan for the purpose of creating and operating an intermarket option market linkage proposed by the Amex, CBOE, and ISE. *See* Securities Exchange Act Release No. 43086 (July 28, 2000), 65 FR 48023 (August 4, 2000). Subsequently, upon separate requests by the Phlx, PCX, and BSE, the Commission issued orders to permit these exchanges to participate in the Linkage Plan. *See* Securities Exchange Act Release Nos. 43573 (November 16, 2000), 65 FR 70850 (November 28,

Continued

proposing: (i) To amend the definition of ''Firm Customer Quote Size'' (''FCQS'')[5] to provide automatic executions for Principal Acting as Agent Orders (''P/A Orders'')[6] sent via Linkage up to the full size of an Options Exchange's disseminated quotation; and (ii) to eliminate a 15-second waiting period between the sending of P/A Orders.

Phlx submitted Amendment No. 1 to its proposed rule change on September 2, 2005.[7] ISE submitted Amendment No. 1 to its proposed rule change on September 7, 2005.[8] Amex submitted Amendment No. 1 to its proposed rule change on September 12, 2005.[9]

Notice of: (i) Amex's proposed rule change, as amended; (ii) BSE's proposed rule change; (iii) CBOE's proposed rule change; (iv) ISE's proposed rule change, as amended; and (v) PCX's proposed rule change were published in the **Federal Register** on September 20, 2005.[10] Notice of Phlx's proposed rule change, as amended, was published in the **Federal Register** on September 21, 2005.[11] No comments were received on the proposed rule changes. This order approves the proposed rule changes, as amended.

II. Description of the Proposals

The purpose of the proposed rule changes is to amend each of the Options Exchanges' rules governing the operation of the Linkage to conform with Amendment No. 16 to the Linkage Plan.[12] In general, the proposed rule changes will modify the rules of each of the Options Exchanges in two respects. First, the definition of FCQS will be amended to reflect that all Options Exchanges disseminate dynamic option quotes with size. Specifically, each of the Option Exchanges proposes to amend its rules so that the FCQS is calculated based on the size of the disseminated quotation of the Options Exchange receiving the P/A Order. Secondly, the proposed rule changes will eliminate a 15-second waiting period for sending a subsequent P/A Order currently provided for in each of the Option Exchange's rules. Finally, the proposed rule changes will clarify the conditions under which automatic execution is required in response to P/A Orders.

III. Discussion

After careful review, the Commission finds that the proposed rule changes, as amended, are consistent with the requirements of the Act and the rules and regulations thereunder applicable to national securities exchanges.[13] In particular, the Commission finds that the proposed rule changes, as amended, are consistent with the provisions of section 6(b)(5) of the Act,[14] which requires, among other things, that national securities exchanges' rules be designed to prevent fraudulent and manipulative acts and practices, to promote just and equitable principles of trade, to remove impediments to and to perfect the mechanism of a free and open market and a national market system and, in general, to protect investors and the public interest.

The Commission believes that the proposed rule changes should facilitate the conformity of the Options Exchanges' rules to Amendment No. 16 to the Linkage Plan. Further, the Commission believes that the Options Exchanges' proposal to calculate FCQS on the basis of the size of the disseminated quotation of the Options Exchange receiving the P/A Order is appropriate and should facilitate the use of the Linkage for the Options Exchanges. This change proposed by the Options Exchanges, coupled with the proposed elimination of the 15-second waiting period for sending a subsequent P/A Order, should facilitate investors' intermarket access to superior prices disseminated by Options Exchanges other than the one to which the order was initially sent.

IV. Conclusion

It is therefore ordered, pursuant to Section 19(b)(2) of the Act,[15] that the proposed rule changes (SR–Amex–2005–047; SR–BSE–2005–39; SR–CBOE–2005–68; SR–ISE–2005–42; SR–PCX–2005–104; SR–Phlx–2005–27), as amended, are approved.

For the Commission, by the Division of Market Regulation, pursuant to delegated authority.[16]

Jonathan G. Katz,

Secretary.

[FR Doc. E5–6028 Filed 10–31–05; 8:45 am]

BILLING CODE 8010–01–P

2000), 43574 (November 16, 2000), 65 FR 70851 (November 28, 2000) and 49198 (February 5, 2004), 69 FR 7029 (February 12, 2004).

[5] *See* Section 2(11) of the Linkage Plan; Amex Rule 940(b)(7); Chapter XII; Section 1(g) of BOX's Rules; CBOE Rule 6.80(9); ISE Rule 1900(7); PCX Rule 6.92(a)(10); and Phlx Rule 1083(g).

[6] *See* Section 2(16)(a) of the Linkage Plan; Amex Rule 940(b)(10)(i); Chapter XII; Section 1(j)(i) of BOX's Rules; CBOE Rule 6.80(12)(i); ISE Rule 1900(10)(i); PCX Rule 6.92(a)(12)(i); and Phlx Rule 1083(k)(i).

[7] In its Amendment No. 1, the Phlx made clarifying changes to the proposed rule text relating to the availability of Options Exchanges' automatic execution systems.

[8] In its Amendment No. 1, the ISE made technical corrections to the proposed rule change.

[9] In its Amendment No. 1, the Amex made clarifying changes to the proposed rule text relating to the availability of Options Exchanges' automatic execution systems.

[10] Securities Exchange Act Release Nos. 52428 (September 14, 2005), 70 FR 55186 (September 20, 2005) (SR–Amex–2005–047); 52429 (September 14, 2005), 70 FR 55191 (September 20, 2005) (SR–BSE–2005–39); 52424 (September 14, 2005), 70 FR 55193 (September 20, 2005) (SR–CBOE–2005–68); 52410 (September 14, 2005), 70 FR 55198 (September 20, 2005) (SR–ISE–2005–42); and 52427 (September 14, 2005), 70 FR 55201 (September 20, 2005) (SR–PCX–2005–104).

[11] Securities Exchange Act Release No. 52425 (September 14, 2005), 70 FR 55443 (September 21, 2005) (SR–Phlx–2005–27).

[12] Amendment No. 16 to the Linkage Plan is approved separately today by the Commission. *See* Securities Exchange Act Release No. 52656 (October 24, 2005).

[13] In approving these proposals, the Commission has considered the proposed rules' impact on efficiency, competition, and capital formation. 15 U.S.C. 78c(f).

[14] 15 U.S.C. 78f(b)(5).

[15] 15 U.S.C. 78s(b)(2).

[16] 17 CFR 200.30–3(a)(12).

SECURITIES AND EXCHANGE COMMISSION

[Release No. 34–52673; File No. SR–CBOE–2005–86]

Self-Regulatory Organizations; Chicago Board Options Exchange, Incorporated; Notice of Filing and Order Granting Accelerated Approval to a Proposed Rule Change To Establish Certain Fees with Respect to Transactions Executed Through the Intermarket Trading System

October 25, 2005.

Pursuant to section 19(b)(1) of the Securities Exchange Act of 1934 (''Act'')[1] and Rule 19b–4 thereunder,[2] notice is hereby given that on October 18, 2005, the Chicago Board Options Exchange, Incorporated (''CBOE'' or ''Exchange'') filed with the Securities and Exchange Commission (''Commission'' or ''SEC'') the proposed rule change as described in Items I and II below, which Items have been prepared by the CBOE. The Commission is publishing this notice to solicit comments on the proposed rule change from interested persons, and is approving the proposal on an accelerated basis.

I. Self-Regulatory Organization's Statement of the Terms of Substance of the Proposed Rule Change

The Exchange proposes to enter into arrangements with other national securities exchanges to pass certain fees they have collected from members for transactions executed on another exchange through the Intermarket

[1] 15 U.S.C. 78s(b)(1).

[2] 17 CFR 240.19b–4.

Trading System (''ITS''). This proposal does not require changes to CBOE rule text.

II. Self-Regulatory Organization's Statement of the Purpose of, and Statutory Basis for, the Proposed Rule Change

In its filing with the Commission, the Exchange included statements concerning the purpose of, and basis for, the proposed rule change and discussed any comments it received on the proposed rule change. The text of these statements may be examined at the places specified in Item III below. The Exchange has prepared summaries, set forth in sections A, B, and C below, of the most significant aspects of such statements.

A. Self-Regulatory Organization's Statement of the Purpose of, and Statutory Basis for, the Proposed Rule Change

1. Purpose

Section 31 of the Act [3] requires each national securities exchange to pay the Commission a fee based on the aggregate dollar amount of certain sales of securities (''covered sales''). Rules 31 and 31T, adopted by the Commission in June 2004,[4] established procedures for the calculation and collection of section 31 fees on such covered sales. Rule 31 requires each national securities exchange that owes section 31 fees to submit a completed Form R31 to the Commission each month, beginning with July 2004. Rule 31T required each exchange to submit a completed Form R31 for each of the months September 2003 to June 2004, inclusive. Each national securities exchange must report its covered sales volume based on the data from a designated clearing agency, when available. The designated clearing agency for covered sales of equity securities is the National Securities Clearing Corporation (''NSCC''). These covered sales are reported in Part I of Form R31, and each exchange is required to ''provide in Part I only the data supplied to it by a designated clearing agency.'' [5] The data supplied by NSCC for the period September 2003 through August 2004 did not accurately reflect the aggregate dollar value of the covered sales occurring on each exchange to permit reports to be made in accordance with new Rules 31 and 31T. In particular, the data NSCC reported to each national securities exchange included non-covered sales data for sales originating on one exchange and executed on another exchange through the ITS.[6]

Section 31 requires that national securities exchanges pay a fee based on the aggregate dollar amount of sales of securities transacted on the exchange. Given the specific language of section 31, the Commission in the Adopting Release for Rules 31 and 31T advised that the current methodology for treating sales of securities that occur through ITS [7] was no longer appropriate and that ''it would be simpler and more transparent for each covered [self-regulatory organization (''SRO'')] to report all covered sales that occur on its market.'' The Commission further stated:

The Commission acknowledges that a covered SRO on which a covered sale occurs as a result of an incoming ITS order may not be able to collect funds to pay the section 31 fee from one of its own members. However, section 31 does not address the manner or extent to which covered SROs may seek to recover the amounts that they pay pursuant to section 31 from their members. Covered SROs may wish to devise new arrangements for passing fees between themselves so that the funds are collected from the covered SRO that originated the ITS order.[8]

The Commission further noted that any such arrangements devised by the SROs would have to be established pursuant to section 19(b) of the Act and Rule 19b–4 thereunder.

A subcommittee of the ITS Operating Committee [9] (''Subcommittee'') has had discussions in order to devise new arrangements for passing fees between the ITS participants that (1) were collected from their members for the months of September 2003 through August 2004; and (2) are being collected from their members beginning in September 2004 and continuing. This proposed rule change is being submitted by the CBOE with the understanding that the other exchanges participating in the proposed arrangement devised by the subcommittee will be submitting substantially similar rule change proposals.[10]

Pursuant to the new arrangement being proposed, each ITS participant exchange determines whether it has received and executed more in dollar value of covered sales than it has originated and sent to each other ITS participant exchange. For example, for the historical period, September 2003 through August 2004, SRO A sent ITS commitments for covered sales whose dollar value was $150 million to SRO B for execution. SRO A collected fees from its members to fund its section 31 obligation for those covered sales executed on SRO B. SRO B, as the executing market center, is obligated to pay the section 31 fee to the SEC. During the same period, SRO B sent ITS commitments for covered sales whose dollar value was $210 million to SRO A. SRO B collected fees from its members for those covered sales executed on SRO A. SRO A, as the executing market center, is obligated to pay the section 31 fee to the SEC. Since SRO A executed a greater dollar value of covered sales from SRO B than it sent to SRO B, the proposed arrangement requires SRO A to determine the amount of the fees collected by SRO B from its members based on the aggregate dollar value of covered sales from SRO B and executed on SRO A through ITS commitments. When invoicing SRO B, SRO A will deduct the amount of the fee it owes to SRO B (*i.e.*, the fee amount based on SRO A's $210 million in aggregate covered sales less the fee amount based on SRO B's $150 million in aggregate covered sales) and will invoice only for the difference of $60 million.

[3] 15 U.S.C. 78ee.

[4] *See* Securities Exchange Act Release No. 49928 (June 28, 2004), 69 FR 41060 (July 7, 2004) (''Adopting Release'').

[5] 17 CFR 240.31(b)(5).

[6] As a result of this and other inaccuracies in the data reported by NSCC, the national securities exchanges were unable to report accurate information on Form R31, unless they made adjustments to the NSCC data based on data other than that provided by NSCC. On October 6, 2004, the Commission's Division of Market Regulation (''Division'') issued a ''no-action'' letter advising exchanges for whom NSCC acts as a designated clearing agency under Rule 31, that the Division staff would not recommend that the Commission take enforcement action if a national securities exchange adjusts the data provided by NSCC to accurately reflect covered sales occurring on the national securities exchange. *See* letter from Robert L.D. Colby, Deputy Director, Division, Commission to Ellen J. Neely, Senior Vice President and General Counsel, Chicago Stock Exchange, Inc. (''CHX''), dated October 6, 2004.

[7] In the Adopting Release, the Commission described the current methodology: ''SRO A sends an ITS commitment to a member of SRO B to sell a security, and the commitment is executed on SRO B. Under existing arrangements, SRO A pays the section 31 fee arising from this trade and passes the fee to its member that initiated the trade. * * * [T]he SROs devised this system because SRO B does not have the ability to require members of SRO A to reimburse it for the cost of its section 31 fees.'' Adopting Release, 69 FR at 41067.

[8] *Id.*

[9] The ITS participants are American Stock Exchange LLC, Boston Stock Exchange (''BSE''), CBOE, CHX, National Association of Securities Dealers (''NASD''), National Stock Exchange, New York Stock Exchange (''NYSE''), Pacific Exchange, and Philadelphia Stock Exchange.

[10] NASD has determined not to participate in the arrangement for passing fees between exchanges although they participated in many of the conference calls regarding the proposed arrangement.

Once the fees have been invoiced and paid for the historical period, the ITS participant exchanges plan to use the same arrangement for the period beginning September 2004 and continuing. It is anticipated that the invoicing process will occur twice yearly to coincide with the March 15 and September 30 payment schedule for section 31 fees set forth in the Act.

To implement this proposed arrangement, an ITS participant exchange will require access to the aggregate dollar value of buy and sell transactions occurring through ITS. Under the proposed arrangement for fees collected for the months of September 2003 through August 2004, an ITS participant exchange may choose to use data obtained from the Inter-market Surveillance Information System (''ISIS'') or data that provides comparable information that includes aggregate dollar value of ITS transactions.[11] The ISIS data is sorted by originating market center (*i.e.*, the sender of an ITS commitment) and receiving market center (*i.e.*, the market center that executes the ITS commitment). Using this data, each ITS participant exchange can determine on a monthly basis the dollar value of all executed commitments sent to and received from another ITS participant exchange.

At its meeting on February 23, 2005, the Subcommittee asked the Securities Industry Automation Corporation (''SIAC'') to determine the time and expense involved for SIAC to use the ITS database that it maintains to provide reports of the aggregate dollar value of buy and sell transactions occurring through ITS to the ITS participants. On March 15, 2005, representatives of the Subcommittee authorized SIAC to develop new reports. SIAC is in the process of developing these reports and expects to complete testing by August 31, 2005. Once SIAC can provide this data, it will no longer be necessary for ISIS data to be used. The new reports provided by SIAC will be used by ITS participants in connection with determining which ITS participant exchange will pay the fee for transactions occurring through ITS and which ITS participant exchange has collected the fee from its members.

The CBOE believes that the proposed arrangement is a fair and efficient means for passing fees collected at one ITS participant exchange based upon executions of covered sales occurring at another ITS participant exchange. The CBOE acknowledges that the legal duty to report and pay the section 31 fee remains with the ITS participant on which the sale was in fact transacted.

2. Statutory Basis

This proposal would establish a process for SROs to enter into arrangements to pass fees they have collected from members for transactions executed on another SRO through ITS. For these reasons, the Exchange believes that the proposed rule change is consistent with the Act and the rules and regulations thereunder that are applicable to a national securities exchange and, in particular, the requirements of section 6(b) of the Act.[12] Specifically, the Exchange believes the proposed rule change is consistent with the requirements of section 6(b)(5) of the Act,[13] in that it is designed to promote just and equitable principles of trade, to prevent fraudulent and manipulative acts and practices, and, in general, to protect investors and the public interest. In addition, the Exchange believes that the proposed rule change is consistent with the provisions of section 6(b)(4) of the Act,[14] which requires that the rules of an exchange provide for the equitable allocation of reasonable dues, fees, and other charges among its members and issuers and other persons using its facilities.

B. Self-Regulatory Organization's Statement on Burden on Competition

The Exchange does not believe that the proposed rule change will impose any burden on competition that is not necessary or appropriate in furtherance of the purposes of the Act.

C. Self-Regulatory Organization's Statement on Comments on the Proposed Rule Change Received From Members, Participants or Others

No written comments were solicited or received with respect to the proposed rule change.

III. Solicitation of Comments

Interested persons are invited to submit written data, views, and arguments concerning the foregoing, including whether the proposed rule change is consistent with the Act. Comments may be submitted by any of the following methods:

Electronic Comments

- Use the Commission's Internet comment form (*http://www.sec.gov/rules/sro.shtml*); or
- Send an e-mail to *rule-comments@sec.gov*. Please include File Number SR–CBOE–2005–86 on the subject line.

Paper Comments

- Send paper comments in triplicate to Jonathan G. Katz, Secretary, Securities and Exchange Commission, Station Place, 100 F Street, NE., Washington, DC 20549–9303.

All submissions should refer to File Number SR–CBOE–2005–86. This file number should be included on the subject line if e-mail is used. To help the Commission process and review your comments more efficiently, please use only one method. The Commission will post all comments on the Commission's Internet Web site (*http://www.sec.gov/rules/sro.shtml*). Copies of the submission, all subsequent amendments, all written statements with respect to the proposed rule change that are filed with the Commission, and all written communications relating to the proposed rule change between the Commission and any person, other than those that may be withheld from the public in accordance with the provisions of 5 U.S.C. 552, will be available for inspection and copying in the Commission's Public Reference Room. Copies of such filing also will be available for inspection and copying at the principal office of the CBOE. All comments received will be posted without change; the Commission does not edit personal identifying information from submissions. You should submit only information that you wish to make available publicly. All submissions should refer to File Number SR–CBOE–2005–86 and should be submitted on or before November 22, 2005.

IV. Commission's Findings and Order Granting Accelerated Approval of a Proposed Rule Change

After careful consideration, the Commission finds that the proposed rule change is consistent with the Act and the rules and regulations thereunder applicable to a national securities exchange.[15] In particular, the Commission believes that the proposal is consistent with section 6(b)(4) of the Act,[16] which requires that the rules of an exchange provide for the equitable allocation of reasonable dues, fees, and other charges among its members and issuers and other persons using its

[11] The NYSE has made available to the ITS participants spreadsheets for each month in the period using the ISIS data.

[12] 15 U.S.C. 78f(b).

[13] 15 U.S.C. 78f(b)(5).

[14] 15 U.S.C. 78f(b)(4).

[15] In approving this proposal, the Commission has considered its impact on efficiency, competition, and capital formation. *See* 15 U.S.C. 78c(f).

[16] 15 U.S.C. 78f(b)(4).

facilities. National securities exchanges obtain funds to pay their section 31 fees to the Commission by charging fees to broker-dealers who generate the covered sales on which section 31 fees are based. An exchange can obtain most of these funds by imposing a fee on one of its members whenever the member is on the sell side of a transaction. However, when the exchange accepts an ITS commitment to buy, the ultimate seller is a party on another market. The exchange lacks the ability to pass a fee to that seller directly, because the seller may not be a member of the exchange. Under the proposed arrangement, which the Commission understands will be adopted by each of the ITS participant exchanges,[17] the exchange that routed the ITS commitment away will continue to collect a fee from the broker-dealer that placed the sell order. Then, with respect to each ITS participant exchange, the exchange will determine whether it is a net sender or net receiver of ITS trades and send fees to or accept fees from each other exchange accordingly. The Commission believes this is an equitable manner for the exchanges to obtain funds to pay their section 31 fees on covered sales resulting from ITS trades.

Under section 19(b)(2) of the Act,[18] the Commission may not approve any proposed rule change prior to the thirtieth day after the date of publication of the notice of filing thereof, unless the Commission finds good cause for so doing. The Commission hereby finds good cause for approving the proposed rule change prior to the thirtieth day after publishing notice of filing thereof in the **Federal Register**. In this case, the Commission does not believe a comment period is necessary because all of the parties affected by the proposed fee—the other ITS participant exchanges—have already consented to and will adopt the same fee arrangement.[19]

For the reasons set forth above, the Commission finds good cause to accelerate approval of the proposed rule change pursuant to section 19(b)(2) of the Act.[20]

V. Conclusion

It is therefore ordered, pursuant to Section 19(b)(2) of the Act,[21] that the proposed rule change (SR–CBOE–2005–86) is hereby approved on an accelerated basis.

For the Commission, by the Division of Market Regulation, pursuant to delegated authority.[22]

Jonathan G. Katz,

Secretary.

[FR Doc. E5–6029 Filed 10–31–05; 8:45 am]

BILLING CODE 8010–01–P

[17] *See* letter from George W. Mann, Jr., Executive Vice President and General Counsel, BSE, and Chairman, Subcommittee, to Michael Gaw, Assistant Director, Division, Commission, dated September 29, 2005.

[18] 15 U.S.C. 78s(b)(2).

[19] *See supra* note 17.

[20] *Id.*

[21] *Id.*

[22] 17 CFR 200.30–3(a)(12).

SECURITIES AND EXCHANGE COMMISSION

[Release No. 34–52674; File No. SR–NYSE–2005–71]

Self-Regulatory Organizations; New York Stock Exchange, Inc.; Notice of Filing and Order Granting Accelerated Approval to a Proposed Rule Change To Establish Certain Fees With Respect to Transactions Executed Through the Intermarket Trading System

October 25, 2005.

Pursuant to Section 19(b)(1) of the Securities Exchange Act of 1934 (''Act'')[1] and Rule 19b–4 thereunder,[2] notice is hereby given that on October 17, 2005, the New York Stock Exchange, Inc. (''NYSE'' or ''Exchange'') filed with the Securities and Exchange Commission (''Commission'' or ''SEC'') the proposed rule change as described in Items I and II below, which Items have been prepared by the NYSE. The Commission is publishing this notice to solicit comments on the proposed rule change from interested persons, and is approving the proposal on an accelerated basis.

I. Self-Regulatory Organization's Statement of the Terms of Substance of the Proposed Rule Change

The Exchange proposes to enter into arrangements with other national securities exchanges to pass certain fees they have collected from members for transactions executed on another exchange through the Intermarket Trading System (''ITS''). This proposal does not require changes to NYSE rule text.

II. Self-Regulatory Organization's Statement of the Purpose of, and Statutory Basis for, the Proposed Rule Change

In its filing with the Commission, the Exchange included statements concerning the purpose of, and basis for, the proposed rule change and discussed any comments it received on the proposed rule change. The text of these statements may be examined at the places specified in Item III below. The Exchange has prepared summaries, set forth in Sections A, B, and C below, of the most significant aspects of such statements.

A. Self-Regulatory Organization's Statement of the Purpose of, and Statutory Basis for, the Proposed Rule Change

1. Purpose

Section 31 of the Act[3] requires each national securities exchange to pay the Commission a fee based on the aggregate dollar amount of certain sales of securities (''covered sales''). Rules 31 and 31T, adopted by the Commission in June 2004,[4] established procedures for the calculation and collection of Section 31 fees on such covered sales. Rule 31 requires each national securities exchange that owes Section 31 fees to submit a completed Form R31 to the Commission each month, beginning with July 2004. Rule 31T required each exchange to submit a completed Form R31 for each of the months September 2003 to June 2004, inclusive. Each national securities exchange must report its covered sales volume based on the data from a designated clearing agency, when available. The designated clearing agency for covered sales of equity securities is the National Securities Clearing Corporation (''NSCC''). These covered sales are reported in Part I of Form R31, and each exchange is required to ''provide in Part I only the data supplied to it by a designated clearing agency.''[5] The data supplied by NSCC for the period September 2003 through August 2004 did not accurately reflect the aggregate dollar value of the covered sales occurring on each exchange to permit reports to be made in accordance with new Rules 31 and 31T. In particular, the data NSCC reported to each national securities exchange included non-covered sales data for sales originating on one exchange and executed on another exchange through the ITS.[6]

[1] 15 U.S.C. 78s(b)(1).

[2] 17 CFR 240.19b–4.

[3] 15 U.S.C. 78ee.

[4] *See* Securities Exchange Act Release No. 49928 (June 28, 2004), 69 FR 41060 (July 7, 2004) (''Adopting Release'').

[5] 17 CFR 240.31(b)(5).

[6] As a result of this and other inaccuracies in the data reported by NSCC, the national securities exchanges were unable to report accurate information on Form R31, unless they made adjustments to the NSCC data based on data other than that provided by NSCC. On October 6, 2004, the Commission's Division of Market Regulation (''Division'') issued a ''no-action'' letter advising exchanges for whom NSCC acts as a designated

Continued

Section 31 requires that national securities exchanges pay a fee based on the aggregate dollar amount of sales of securities transacted on the exchange. Given the specific language of Section 31, the Commission in the Adopting Release for Rules 31 and 31T advised that the current methodology for treating sales of securities that occur through ITS [7] was no longer appropriate and that ''it would be simpler and more transparent for each covered [self-regulatory organization (''SRO'')] to report all covered sales that occur on its market.'' The Commission further stated:

> The Commission acknowledges that a covered SRO on which a covered sale occurs as a result of an incoming ITS order may not be able to collect funds to pay the Section 31 fee from one of its own members. However, Section 31 does not address the manner or extent to which covered SROs may seek to recover the amounts that they pay pursuant to Section 31 from their members. Covered SROs may wish to devise new arrangements for passing fees between themselves so that the funds are collected from the covered SRO that originated the ITS order.[8]

The Commission further noted that any such arrangements devised by the SROs would have to be established pursuant to Section 19(b) of the Act and Rule 19b–4 thereunder.

A subcommittee of the ITS Operating Committee [9] (''Subcommittee'') has had discussions in order to devise new arrangements for passing fees between the ITS participants that (1) were collected from their members for the months of September 2003 through August 2004; and (2) are being collected from their members beginning in September 2004 and continuing. This proposed rule change is being submitted by the NYSE with the understanding that the other exchanges participating in the proposed arrangement devised by the subcommittee will be submitting substantially similar rule change proposals.[10]

Pursuant to the new arrangement being proposed, each ITS participant exchange determines whether it has received and executed more in dollar value of covered sales than it has originated and sent to each other ITS participant exchange. For example, for the historical period, September 2003 through August 2004, SRO A sent ITS commitments for covered sales whose dollar value was $150 million to SRO B for execution. SRO A collected fees from its members to fund its Section 31 obligation for those covered sales executed on SRO B. SRO B, as the executing market center, is obligated to pay the Section 31 fee to the SEC. During the same period, SRO B sent ITS commitments for covered sales whose dollar value was $210 million to SRO A. SRO B collected fees from its members for those covered sales executed on SRO A. SRO A, as the executing market center, is obligated to pay the Section 31 fee to the SEC. Since SRO A executed a greater dollar value of covered sales from SRO B than it sent to SRO B, the proposed arrangement requires SRO A to determine the amount of the fees collected by SRO B from its members based on the aggregate dollar value of covered sales from SRO B and executed on SRO A through ITS commitments. When invoicing SRO B, SRO A will deduct the amount of the fee it owes to SRO B (*i.e.*, the fee amount based on SRO A's $210 million in aggregate covered sales less the fee amount based on SRO B's $150 million in aggregate covered sales) and will invoice only for the difference of $60 million.

Once the fees have been invoiced and paid for the historical period, the ITS participant exchanges plan to use the same arrangement for the period beginning September 2004 and continuing. It is anticipated that the invoicing process will occur twice yearly to coincide with the March 15 and September 30 payment schedule for Section 31 fees set forth in the Act.

To implement this proposed arrangement, an ITS participant exchange will require access to the aggregate dollar value of buy and sell transactions occurring through ITS. Under the proposed arrangement for fees collected for the months of September 2003 through August 2004, an ITS participant exchange may choose to use data obtained from the Inter-market Surveillance Information System (''ISIS'') or data that provides comparable information that includes aggregate dollar value of ITS transactions.[11] The ISIS data is sorted by originating market center (*i.e.,* the sender of an ITS commitment) and receiving market center (*i.e.,* the market center that executes the ITS commitment). Using this data, each ITS participant exchange can determine on a monthly basis the dollar value of all executed commitments sent to and received from another ITS participant exchange.

At its meeting on February 23, 2005, the Subcommittee asked the Securities Industry Automation Corporation (''SIAC'') to determine the time and expense involved for SIAC to use the ITS database that it maintains to provide reports of the aggregate dollar value of buy and sell transactions occurring through ITS to the ITS participants. On March 15, 2005, representatives of the Subcommittee authorized SIAC to develop new reports. SIAC is in the process of developing these reports. Once SIAC can provide this data, it will no longer be necessary for ISIS data to be used. The new reports provided by SIAC will be used by ITS participants in connection with determining which ITS participant exchange will pay the fee for transactions occurring through ITS and which ITS participant exchange has collected the fee from its members.

The NYSE believes that the proposed arrangement is a fair and efficient means for passing fees collected at one ITS participant exchange based upon executions of covered sales occurring at another ITS participant exchange. The NYSE acknowledges that the legal duty to report and pay the Section 31 fee remains with the ITS participant on which the sale was in fact transacted.

2. Statutory Basis

This proposal would establish a process for SROs to enter into arrangements to pass fees they have collected from members for transactions executed on another SRO through ITS. For these reasons, the Exchange believes that the proposed rule change is consistent with the Act and the rules and regulations thereunder that are applicable to a national securities exchange and, in particular, the requirements of Section 6(b) of the

clearing agency under Rule 31, that the Division staff would not recommend that the Commission take enforcement action if a national securities exchange adjusts the data provided by NSCC to accurately reflect covered sales occurring on the national securities exchange. *See* letter from Robert L.D. Colby, Deputy Director, Division, Commission to Ellen J. Neely, Senior Vice President and General Counsel, Chicago Stock Exchange, Inc. (''CHX''), dated October 6, 2004.

[7] In the Adopting Release, the Commission described the current methodology: ''SRO A sends an ITS commitment to a member of SRO B to sell a security, and the commitment is executed on SRO B. Under existing arrangements, SRO A pays the Section 31 fee arising from this trade and passes the fee to its member that initiated the trade. * * * [T]he SROs devised this system because SRO B does not have the ability to require members of SRO A to reimburse it for the cost of its Section 31 fees.'' Adopting Release, 69 FR at 41067.

[8] *Id.*

[9] The ITS participants are American Stock Exchange LLC, Boston Stock Exchange (''BSE''), Chicago Board Options Exchange, CHX, National Association of Securities Dealers (''NASD''), National Stock Exchange, NYSE, Pacific Exchange, and Philadelphia Stock Exchange.

[10] NASD has determined not to participate in the arrangement for passing fees between exchanges although they participated in many of the conference calls regarding the proposed arrangement.

[11] The NYSE has made available to the ITS participants spreadsheets for each month in the period using the ISIS data.

Act.[12] Specifically, the Exchange believes the proposed rule change is consistent with the requirements of Section 6(b)(5) of the Act,[13] in that it is designed to promote just and equitable principles of trade, to prevent fraudulent and manipulative acts and practices, and, in general, to protect investors and the public interest. In addition, the Exchange believes that the proposed rule change is consistent with the provisions of Section 6(b)(4) of the Act,[14] which requires that the rules of an exchange provide for the equitable allocation of reasonable dues, fees, and other charges among its members and issuers and other persons using its facilities.

B. Self-Regulatory Organization's Statement on Burden on Competition

The Exchange does not believe that the proposed rule change will impose any burden on competition that is not necessary or appropriate in furtherance of the purposes of the Act.

C. Self-Regulatory Organization's Statement on Comments on the Proposed Rule Change Received From Members, Participants or Others

No written comments were solicited or received with respect to the proposed rule change.

III. Solicitation of Comments

Interested persons are invited to submit written data, views, and arguments concerning the foregoing, including whether the proposed rule change is consistent with the Act. Comments may be submitted by any of the following methods:

Electronic Comments

- Use the Commission's Internet comment form (*http://www.sec.gov/rules/sro.shtml*); or
- Send an e-mail to *rule-comments@sec.gov.* Please include File Number SR–NYSE–2005–71 on the subject line.

Paper Comments

- Send paper comments in triplicate to Jonathan G. Katz, Secretary, Securities and Exchange Commission, Station Place, 100 F Street, NE., Washington, DC 20549-9303.

All submissions should refer to File Number SR–NYSE–2005–71. This file number should be included on the subject line if e-mail is used. To help the Commission process and review your comments more efficiently, please use only one method. The Commission will post all comments on the Commission's Internet Web site (*http://www.sec.gov/rules/sro.shtml*). Copies of the submission, all subsequent amendments, all written statements with respect to the proposed rule change that are filed with the Commission, and all written communications relating to the proposed rule change between the Commission and any person, other than those that may be withheld from the public in accordance with the provisions of 5 U.S.C. 552, will be available for inspection and copying in the Commission's Public Reference Room. Copies of such filing also will be available for inspection and copying at the principal office of the NYSE. All comments received will be posted without change; the Commission does not edit personal identifying information from submissions. You should submit only information that you wish to make available publicly. All submissions should refer to File Number SR–NYSE–2005–71 and should be submitted on or before November 22, 2005.

IV. Commission's Findings and Order Granting Accelerated Approval of a Proposed Rule Change

After careful consideration, the Commission finds that the proposed rule change is consistent with the Act and the rules and regulations thereunder applicable to a national securities exchange.[15] In particular, the Commission believes that the proposal is consistent with Section 6(b)(4) of the Act,[16] which requires that the rules of an exchange provide for the equitable allocation of reasonable dues, fees, and other charges among its members and issuers and other persons using its facilities. National securities exchanges obtain funds to pay their Section 31 fees to the Commission by charging fees to broker-dealers who generate the covered sales on which Section 31 fees are based. An exchange can obtain most of these funds by imposing a fee on one of its members whenever the member is on the sell side of a transaction. However, when the exchange accepts an ITS commitment to buy, the ultimate seller is a party on another market. The exchange lacks the ability to pass a fee to that seller directly, because the seller may not be a member of the exchange. Under the proposed arrangement, which the Commission understands will be adopted by each of the ITS participant exchanges,[17] the exchange that routed the ITS commitment away will continue to collect a fee from the broker-dealer that placed the sell order. Then, with respect to each ITS participant exchange, the exchange will determine whether it is a net sender or net receiver of ITS trades and send fees to or accept fees from each other exchange accordingly. The Commission believes this is an equitable manner for the exchanges to obtain funds to pay their Section 31 fees on covered sales resulting from ITS trades.

Under Section 19(b)(2) of the Act,[18] the Commission may not approve any proposed rule change prior to the thirtieth day after the date of publication of the notice of filing thereof, unless the Commission finds good cause for so doing. The Commission hereby finds good cause for approving the proposed rule change prior to the thirtieth day after publishing notice of filing thereof in the **Federal Register.** In this case, the Commission does not believe a comment period is necessary because all of the parties affected by the proposed fee—the other ITS participant exchanges—have already consented to and will adopt the same fee arrangement.[19]

For the reasons set forth above, the Commission finds good cause to accelerate approval of the proposed rule change pursuant to Section 19(b)(2) of the Act.[20]

V. Conclusion

It is therefore ordered, pursuant to Section 19(b)(2) of the Act,[21] that the proposed rule change (SR–NYSE–2005–71) is hereby approved on an accelerated basis.

For the Commission, by the Division of Market Regulation, pursuant to delegated authority.[22]

Jonathan G. Katz,

Secretary.

[FR Doc. E5–6022 Filed 10–31–05; 8:45 am]

BILLING CODE 8010–01–P

[12] 15 U.S.C. 78f(b).

[13] 15 U.S.C. 78f(b)(5).

[14] 15 U.S.C. 78f(b)(4).

[15] In approving this proposal, the Commission has considered its impact on efficiency, competition, and capital formation. *See* 15 U.S.C. 78c(f).

[16] 15 U.S.C. 78f(b)(4).

[17] *See* letter from George W. Mann, Jr., Executive Vice President and General Counsel, BSE, and Chairman, Subcommittee, to Michael Gaw, Assistant Director, Division, Commission, dated September 29, 2005.

[18] 15 U.S.C. 78s(b)(2).

[19] *See supra* note 17.

[20] *Id.*

[21] *Id.*

[22] 17 CFR 200.30-3(a)(12).

SECURITIES AND EXCHANGE COMMISSION

[Release No. 34–52675; File No. SR–PCX–2005–75]

Self-Regulatory Organizations; Pacific Exchange, Inc.; Notice of Filing and Order Granting Accelerated Approval to a Proposed Rule Change and Amendment No. 1 Thereto Relating to Offers of Settlement

October 25, 2005.

Pursuant to section 19(b)(1) [1] of the Securities Exchange Act of 1934 (''Act'') and Rule 19b–4 [2] thereunder, notice is hereby given that on June 13, 2005, the Pacific Exchange, Inc. (''PCX'' or ''Exchange'') filed with the Securities and Exchange Commission (''Commission'') the proposed rule change as described in Items I and II below, which Items have been prepared by the Exchange. On September 21, 2005, PCX submitted Amendment No. 1 to the proposed rule change.[3] The Commission is publishing this notice and order to solicit comments on the proposed rule change, as amended, from interested persons and simultaneously is approving the proposal, as amended, on an accelerated basis.

I. Self-Regulatory Organization's Statement of the Terms of Substance of the Proposed Rule Change

PCX is proposing to amend PCX Rule 10.6 pertaining to offers of settlement. The text of the proposed rule change, as amended, is available on PCX's Web site (*http://www.pacificex.com*), at the PCX's principal office, and at the Commission's Public Reference Room.

II. Self-Regulatory Organization's Statement of the Purpose of, and Statutory Basis for, the Proposed Rule Change

In its filing with the Commission, the Exchange included statements concerning the purpose of and basis for the proposed rule change and discussed any comments it received on the proposed rule change. The text of these statements may be examined at the places specified in Item III below. The Exchange has prepared summaries, set forth in Sections A, B, and C below, of the most significant aspects of such statements.

[1] 15 U.S.C. 78s(b)(1).

[2] 17 CFR 240.19b–4.

[3] *See* Amendment No. 1.

A. Self-Regulatory Organization's Statement of the Purpose of, and the Statutory Basis for, the Proposed Rule Change

1. Purpose

The Exchange states that the purpose of the proposed rule change is to revise the procedures for offers of settlement submitted in Exchange enforcement actions against Options Trading Permit (''OTP'') Holders and OTP Firms in order to make the disciplinary process more efficient and effective while maintaining appropriate OTP Holder and OTP Firm involvement in the oversight of the settlement process.

Currently, all offers of settlement, whether contested or uncontested by the Exchange's Department of Enforcement, are considered by the Ethics and Business Conduct Committee (''EBCC'') for acceptance or rejection. If an offer of settlement is accepted by the EBCC, the EBCC issues a decision, and the Respondent [4] cannot seek review of the decision. EBCC decisions are then submitted to the PCX Board of Directors (the ''Board'') in order to provide the Board with an opportunity to accept or reject the offer of settlement. This process is subject to the delays occurring between the time when the EBCC accepts an offer of settlement and the time when the Board subsequently reviews the accepted offer of settlement. Consequently, the imposition of disciplinary measures intended to prevent misconduct and maintain the integrity of the marketplace are also delayed.

Under the proposed rule change, an offer of settlement would be ''uncontested'' when a Respondent makes an offer and the Department of Enforcement does not oppose it.[5] In cases of uncontested offers of settlement made before a complaint has been issued, the General Counsel of the Exchange would have the authority to accept or reject the offers and decisions.[6] Similarly, in cases of uncontested offers of settlement made after a complaint has been issued but before the hearing on the merits, the General Counsel of the Exchange would have the authority to accept or reject the offers and decisions.[7] Finally, in cases of uncontested offers of settlement made after a hearing on the merits has begun, the Conduct Panel for the hearing would have the authority to accept or reject offers and decisions.[8]

Any offer of settlement opposed by the Department of Enforcement would be ''contested.'' [9] Under the proposal, Respondents would not be permitted to submit contested offers of settlement for consideration by the EBCC or the Conduct Panel before a complaint has been issued.[10] In cases of contested offers of settlement made after a complaint has been issued but before a hearing on the merits has begun, the EBCC would have the authority to accept or reject the offers and decisions,[11] which is consistent with current PCX practices. In cases of contested offers of settlement made after a hearing on the merits has begun, the Conduct Panel would have the authority to accept or reject the offers and decisions.[12] Any offer of settlement submitted by a Respondent to the Conduct Panel after a hearing on the merits has begun would not stay the proceedings, unless the Conduct Panel decides to stay the proceedings.[13]

All offers of settlement would become final upon acceptance by the General Counsel of the Exchange, the EBCC, or the Conduct Panel, as appropriate, and thus Board approval of offers of settlement would no longer be required. Under the proposal, the Board and the EBCC would review on a quarterly basis all offers of settlement after-the-fact to provide guidance and feedback to the Department of Enforcement and the General Counsel of the Exchange concerning appropriate settlement practices and amounts.[14]

In addition, the proposed rule change sets forth certain requirements with which offers of settlement must comply.[15] These requirements include that the offer be in writing and signed by the person making the offer, and that the offer set forth certain details stating

[4] *See* PCX Rule 10.4 (defining ''Respondent'').

[5] *See* proposed PCX Rule 10(e)(1). The Commission notes that the Exchange's Department of Enforcement would transmit the Respondent's uncontested offer of settlement, along with a proposed decision, to either the Exchange's General Counsel or the Conduct Panel, as appropriate.

[6] *See* proposed PCX Rule 10(e)(2). When a Respondent submits an offer of settlement, the Department of Enforcement drafts a decision accepting the offer and submits both documents to the appropriate body. *See* Letter from Alden Adkins, Chief Regulatory Officer, PCX, to Katherine A. England, Assistant Director, Division of Market Regulation, Commission, dated October 6, 2005.

[7] *See* proposed PCX Rule 10(e)(3).

[8] *See* proposed PCX Rule 10(e)(4).

[9] *See* proposed PCX Rule 10(f)(1). The Commission notes that the Exchange's Department of Enforcement would transmit the Respondent's contested offer of settlement, along with a proposed decision, to either the EBCC or the Conduct Panel, as appropriate.

[10] *See* proposed PCX Rule 10(f)(2).

[11] *See* proposed PCX Rule 10(f)(3).

[12] *See* proposed PCX Rule 10(f)(4).

[13] *See* proposed PCX Rule 10(a)(2).

[14] *See* proposed PCX Rule 10(k). Neither the Board's nor the EBCC's action will affect any issued decisions.

[15] *See* proposed PCX Rule 10(c).

the statutory provisions or rules alleged to have been violated, the acts or practices that the OTP Holder or OTP Firm is alleged to have engaged in or omitted, findings of fact, proposed sanctions, and the effective date of such proposed sanctions.

Finally, the proposed rule change sets forth certain rights that a Respondent waives upon submission of an offer of settlement to the PCX. In particular, a Respondent waives his right to: (1) Claim bias or prejudgment by certain individuals; (2) appeal before PCX committees, the Commission, and federal, state, and local courts; and (3) claim violations of the *ex parte* prohibitions of PCX Rule 10.3.[16] The Exchange believes that waiver of such rights is appropriate in light of the proposed rule's intent, which is to create a more efficient and effective disciplinary process.[17]

2. Statutory Basis

The Exchange believes that the proposed rule change is consistent with section 6(b) of the Act [18] in general, and furthers the objectives of section 6(b)(5) of the Act [19] in particular, because it is designed to prevent fraudulent and manipulative acts and practices, to promote just and equitable principles of trade, to foster cooperation and coordination with persons engaged in facilitating transactions in securities, and to remove impediments to and perfect the mechanism of a free and open market and a national market system.

B. Self-Regulatory Organization's Statement on Burden on Competition

The Exchange does not believe that the proposed rule change will impose any burden on competition that is not necessary or appropriate in furtherance of the purposes of the Act.

C. Self-Regulatory Organization's Statement on Comments on the Proposed Rule Change Received from Members, Participants or Others

Written comments on the proposed rule change were neither solicited nor received.

III. Solicitation of Comments

Interested persons are invited to submit written data, views, and arguments concerning the foregoing, including whether the proposed rule change, as amended, is consistent with the Act. Comments may be submitted by any of the following methods:

Electronic Comments

- Use the Commission's Internet comment form (*http://www.sec.gov/rules/sro.shtml*); or
- Send an e-mail to *rule-comments@sec.gov.* Please include File Number SR–PCX–2005–75 on the subject line.

Paper Comments

- Send paper comments in triplicate to Jonathan G. Katz, Secretary, Securities and Exchange Commission, 100 F Street, NE., Washington, DC 20549–9303.

All submissions should refer to File Number SR–PCX–2005–75. This file number should be included on the subject line if e-mail is used. To help the Commission process and review your comments more efficiently, please use only one method. The Commission will post all comments on the Commission's Internet Web site (*http://www.sec.gov/rules/sro.shtml*). Copies of the submission, all subsequent amendments, all written statements with respect to the proposed rule change that are filed with the Commission, and all written communications relating to the proposed rule change between the Commission and any person, other than those that may be withheld from the public in accordance with the provisions of 5 U.S.C. 552, will be available for inspection and copying in the Commission's Public Reference Room. Copies of the filing also will be available for inspection and copying at the principal office of the PCX. All comments received will be posted without change; the Commission does not edit personal identifying information from submissions. You should submit only information that you wish to make available publicly. All submissions should refer to File Number SR–PCX–2005–75 and should be submitted on or before November 22, 2005.

IV. Commission's Findings and Order Granting Accelerated Approval of Proposed Rule Change

The Commission finds that the proposed rule change, as amended, is consistent with the requirements of the Act and the rules and regulations thereunder applicable to a national securities exchange.[20] Specifically, the Commission believes that the proposal is consistent with section 6(b)(7) of the Act,[21] which requires that the rules of an exchange provide a fair procedure for the discipline of its members and persons associated with its members. The Commission also believes that the proposal is reasonably designed to provide a more efficient disciplinary process to address violations of the Exchange's rules and the federal securities laws by the Exchange's members.

Under the Exchange's proposal, a Respondent may propose an uncontested offer of settlement to the Exchange's Department of Enforcement in response to the initiation of a disciplinary inquiry by the Department of Enforcement.[22] If the Respondent submits an uncontested offer of settlement before a hearing on the merits has begun, then the Department of Enforcement would transmit the uncontested offer, along with a proposed decision, to the Exchange's General Counsel for consideration. Specifically, if a Respondent submits an uncontested offer of settlement before the issuance of a complaint, and the General Counsel accepts it, then the Department of Enforcement would issue the decision and notify the parties. If a Respondent submits an uncontested offer of settlement after the Department of Enforcement has issued a complaint, and the General Counsel accepts it, then the General Counsel would issue the decision and notify the parties. Finally, if the Respondent submits an uncontested offer of settlement after a hearing on the merits has begun, then the Department of Enforcement would transmit the uncontested offer, along with a proposed decision, to the Conduct Panel for consideration. If the Conduct Panel accepts the decision, then the General Counsel would issue the decision and notify the parties.

The Commission believes that the involvement of the Exchange's General Counsel in considering uncontested offers of settlement submitted before a hearing on the merits has begun should be an appropriate safeguard and provides for an appropriate separation of functions at the Exchange. Further, the Commission believes that the proposal is reasonably designed to advance the interests of the Exchange's Department of Enforcement in efficiently and expeditiously resolving

[16] *See* proposed PCX Rule 10(d).

[17] Paragraph (j) of the proposed rule change provides that a Respondent shall not be prejudiced by an offer of settlement that is rejected.

[18] 15 U.S.C. 78f(b)(5).

[19] 15 U.S.C. 78f(b).

[20] In approving this proposed rule change, as amended, the Commission has considered its impact on efficiency, competition, and capital formation. *See* 15 U.S.C. 78c(f).

[21] 15 U.S.C. 78f(b)(7).

[22] The Exchange represents that it contacts a Respondent before any complaint is issued, such that the Respondent would be in a position to ascertain whether the terms of any contemplated offer of settlement would be ''uncontested'' or ''contested'' by the Exchange's Department of Enforcement.

disciplinary cases when an uncontested offer of settlement is made before the commencement of a hearing on the merits without the involvement of the EBCC, while providing for review and consideration of possible violations. In particular, the Commission believes that the involvement of the Department of Enforcement and General Counsel in considering and rendering decisions on uncontested offers of settlement before the commencement of a hearing on the merits is appropriate, given the Respondent's choice to propose settlement terms that the Exchange's Department of Enforcement considers acceptable.

Additionally, the proposal allows a Respondent, after a complaint has been issued, to submit an offer of settlement for consideration that is otherwise opposed on its terms, *i.e.*, contested, by the Exchange's Department of Enforcement. If submitted before a hearing on the merits, a contested offer of settlement would be considered by the EBCC. If a Respondent submits a contested offer of settlement after a hearing on the merits has begun, the offer would be considered by the Conduct Panel. The Commission believes that this process is reasonably designed to allow Respondents to have their contested offers of settlement considered by the EBCC or the Conduct Panel when the offer would otherwise be opposed by the Exchange's Department of Enforcement. In addition, the Commission believes that this process balances the Exchange's interests in achieving efficient resolutions of disciplinary matters with its members' interests in having a process through which they can submit contested offers of settlement for consideration by the EBCC or the Conduct Panel. The Commission notes that under current PCX Rule 10, all offers of settlement are considered by the EBCC.

In particular, the Commission notes that contested offers of settlement submitted after the issuance of a complaint but before the commencement of a hearing on the merits would be considered by the EBCC, and contested offers of settlement submitted after the issuance of a complaint and after the commencement of a hearing on the merits would be considered by the Conduct Panel. The Commission believes that this procedure provides a fair process by which the Exchange's members may take their contested offers of settlement before the EBCC or Conduct Panel, both of which are comprised primarily of the OTP Holders or allied persons of OTP Firms.

Moreover, the proposed rule change sets forth in detail provisions relating to the content and signature requirements for offers of settlement, as well as waivers of certain rights upon submission of an offer of settlement. Additionally, the proposal provides for quarterly review by the EBCC and the Board Appeals Committee of final disciplinary actions in order to provide the Department of Enforcement and General Counsel with guidance on future settlement practices and settlement amounts. The Commission believes that this provision is reasonably designed to provide for EBCC and Board input, albeit on a prospective basis only, on the Exchange's disciplinary program, thereby providing a mechanism for the Board to comply with the self-regulatory organization's responsibility to maintain an adequate and effective disciplinary system.

The Commission finds good cause for approving this proposal before the thirtieth day after the publication of notice thereof in the **Federal Register**. Accelerating approval of the proposal will allow the Exchange to implement, without undue delay, a more efficient process for reviewing and deciding upon offers of settlement, while maintaining OTP Holder and OTP Firm involvement in the settlement process. In addition, the Commission notes that the NASD has a substantially similar rule with respect to offers of settlement.

V. Conclusion

It is therefore ordered, pursuant to section 19(b)(2) of the Act,[23] that the proposed rule change, as amended (SR–PCX–2005–75), is hereby approved on an accelerated basis.

For the Commission, by the Division of Market Regulation, pursuant to delegated authority.[24]

Jonathan G. Katz,

Secretary.

[FR Doc. 05–21716 Filed 10–31–05; 8:45 am]

BILLING CODE 8010–01–P

[23] 15 U.S.C. 78s(b)(2).

[24] 17 CFR 200.30–3(a)(12).

SECURITIES AND EXCHANGE COMMISSION

[Release No. 34–52676; File No. SR–PCX–2005–76]

Self-Regulatory Organizations; Pacific Exchange, Inc.; Notice of Filing and Order Granting Accelerated Approval to a Proposed Rule Change and Amendment No. 1 Thereto Relating to Offers of Settlement

October 25, 2005.

Pursuant to section 19(b)(1)[1] of the Securities Exchange Act of 1934 (''Act'') and Rule 19b–4[2] thereunder, notice is hereby given that on June 13, 2005, the Pacific Exchange, Inc. (''PCX'' or ''Exchange'') filed with the Securities and Exchange Commission (''Commission'') the proposed rule change as described in Items I and II below, which Items have been prepared by the Exchange. On September 21, 2005, PCX submitted Amendment No. 1 to the proposed rule change.[3] The Commission is publishing this notice and order to solicit comments on the proposed rule change, as amended, from interested persons and simultaneously is approving the proposal, as amended, on an accelerated basis.

I. Self-Regulatory Organization's Statement of the Terms of Substance of the Proposed Rule Change

PCX is proposing to amend PCX Equities, Inc. (''PCXE'') Rule 10.6 pertaining to offers of settlement. The text of the proposed rule change, as amended, is available on PCX's Web site (*http://www.pacificex.com*), at the PCX's principal office, and at the Commission's Public Reference Room.

II. Self-Regulatory Organization's Statement of the Purpose of, and Statutory Basis for, the Proposed Rule Change

In its filing with the Commission, the Exchange included statements concerning the purpose of and basis for the proposed rule change and discussed any comments it received on the proposed rule change. The text of these statements may be examined at the places specified in Item III below. The Exchange has prepared summaries, set forth in Sections A, B, and C below, of the most significant aspects of such statements.

[1] 15 U.S.C. 78s(b)(1).

[2] 17 CFR 240.19b–4.

[3] *See* Amendment No. 1.

A. Self-Regulatory Organization's Statement of the Purpose of, and the Statutory Basis for, the Proposed Rule Change

1. Purpose

The Exchange states that the purpose of the proposed rule change is to revise the procedures for offers of settlement submitted in Exchange enforcement actions against Equity Trading Permit (''ETP'') Holders in order to make the disciplinary process more efficient and effective while maintaining appropriate ETP Holder involvement in the oversight of the settlement process.

Currently, all offers of settlement, whether contested or uncontested by the Exchange's Department of Enforcement, are considered by the Business Conduct Committee (''BCC'') for acceptance or rejection. If an offer of settlement is accepted by the BCC, the BCC issues a decision, and the Respondent [4] cannot seek review of the decision. BCC decisions are then submitted to the PCX Board of Directors (the ''Board'') in order to provide the Board with an opportunity to accept or reject the offer of settlement. This process is subject to the delays occurring between the time when the BCC accepts an offer of settlement and the time when the Board subsequently reviews the accepted offer of settlement. Consequently, the imposition of disciplinary measures intended to prevent misconduct and maintain the integrity of the marketplace are also delayed.

Under the proposed rule change, an offer of settlement would be ''uncontested'' when a Respondent makes an offer and the Department of Enforcement does not oppose it.[5] In cases of uncontested offers of settlement made before a complaint has been issued, the General Counsel of the Exchange would have the authority to accept or reject the offers and decisions.[6] Similarly, in cases of uncontested offers of settlement made after a complaint has been issued but before the hearing on the merits, the General Counsel of the Exchange would have the authority to accept or reject the offers and decisions.[7] Finally, in cases of uncontested offers of settlement made after a hearing on the merits has begun, the Conduct Panel for the hearing would have the authority to accept or reject offers and decisions.[8]

Any offer of settlement opposed by the Department of Enforcement would be ''contested.'' [9] Under the proposal, Respondents would not be permitted to submit contested offers of settlement for consideration by the BCC or the Conduct Panel before a complaint has been issued.[10] In cases of contested offers of settlement made after a complaint has been issued but before a hearing on the merits has begun, the BCC would have the authority to accept or reject the offers and decisions,[11] which is consistent with current PCXE practices. In cases of contested offers of settlement made after a hearing on the merits has begun, the Conduct Panel would have the authority to accept or reject the offers and decisions.[12] Any offer of settlement submitted by a Respondent to the Conduct Panel after a hearing on the merits has begun would not stay the proceedings, unless the Conduct Panel decides to stay the proceedings.[13]

All offers of settlement would become final upon acceptance by the General Counsel of the Exchange, the BCC, or the Conduct Panel, as appropriate, and thus Board approval of offers of settlement would no longer be required. Under the proposal, the Board and the BCC would review on a quarterly basis all offers of settlement after-the-fact to provide guidance and feedback to the Department of Enforcement and the General Counsel of the Exchange concerning appropriate settlement practices and amounts.[14]

In addition, the proposed rule change sets forth certain requirements with which offers of settlement must comply.[15] These requirements include that the offer be in writing and signed by the person making the offer, and that the offer set forth certain details stating the statutory provisions or rules alleged to have been violated, the acts or practices that the ETP Holder is alleged to have engaged in or omitted, findings of fact, proposed sanctions, and the effective date of such proposed sanctions.

Finally, the proposed rule change sets forth certain rights that a Respondent waives upon submission of an offer of settlement to the PCX. In particular, a Respondent waives his right to: (1) Claim bias or prejudgment by certain individuals; (2) appeal before PCX committees, the Commission, and Federal, State, and local courts; and (3) claim violations of the *ex parte* prohibitions of PCXE Rule 10.3.[16] The Exchange believes that waiver of such rights is appropriate in light of the proposed rule's intent, which is to create a more efficient and effective disciplinary process.[17]

2. Statutory Basis

The Exchange believes that the proposed rule change is consistent with section 6(b) of the Act [18] in general, and furthers the objectives of section 6(b)(5) of the Act [19] in particular, because it is designed to prevent fraudulent and manipulative acts and practices, to promote just and equitable principles of trade, to foster cooperation and coordination with persons engaged in facilitating transactions in securities, and to remove impediments to and perfect the mechanism of a free and open market and a national market system.

B. Self-Regulatory Organization's Statement on Burden on Competition

The Exchange does not believe that the proposed rule change will impose any burden on competition that is not necessary or appropriate in furtherance of the purposes of the Act.

C. Self-Regulatory Organization's Statement on Comments on the Proposed Rule Change Received From Members, Participants or Others

Written comments on the proposed rule change were neither solicited nor received.

III. Solicitation of Comments

Interested persons are invited to submit written data, views, and arguments concerning the foregoing, including whether the proposed rule change, as amended, is consistent with the Act. Comments may be submitted by any of the following methods:

[4] *See* PCXE Rule 10.4 (defining ''Respondent'').

[5] *See* proposed PCXE Rule 10(e)(1). The Commission notes that the Exchange's Department of Enforcement would transmit the Respondent's uncontested offer of settlement, along with a proposed decision, to either the Exchange's General Counsel or the Conduct Panel, as appropriate.

[6] *See* proposed PCXE Rule 10(e)(2). When a Respondent submits an offer of settlement, the Department of Enforcement drafts a decision accepting the offer and submits both documents to the appropriate body. *See* Letter from Alden Adkins, Chief Regulatory Officer, PCX, to Katherine A. England, Assistant Director, Division of Market Regulation, Commission, dated October 6, 2005.

[7] *See* proposed PCXE Rule 10(e)(3).

[8] *See* proposed PCXE Rule 10(e)(4).

[9] *See* proposed PCXE Rule 10(f)(1). The Commission notes that the Exchange's Department of Enforcement would transmit the Respondent's contested offer of settlement, along with a proposed decision, to either the BCC or the Conduct Panel, as appropriate.

[10] *See* proposed PCXE Rule 10(f)(2).

[11] *See* proposed PCXE Rule 10(f)(3).

[12] *See* proposed PCXE Rule 10(f)(4).

[13] *See* proposed PCXE Rule 10(a)(2).

[14] *See* proposed PCXE Rule 10(k). Neither the Board's nor the BCC's action will affect any issued decisions.

[15] *See* proposed PCXE Rule 10(c).

[16] *See* proposed PCXE Rule 10(d).

[17] Paragraph (j) of the proposed rule change provides that a Respondent shall not be prejudiced by an offer of settlement that is rejected.

[18] 15 U.S.C. 78f(b).

[19] 15 U.S.C. 78f(b)(5).

Electronic Comments

- Use the Commission's Internet comment form (*http://www.sec.gov/rules/sro.shtml*); or
- Send an e-mail to *rule-comments@sec.gov.* Please include File Number SR–PCX–2005–76 on the subject line.

Paper Comments

- Send paper comments in triplicate to Jonathan G. Katz, Secretary, Securities and Exchange Commission, 100 F Street, NE., Washington, DC 20549–9303. All submissions should refer to File Number SR–PCX–2005–76. This file number should be included on the subject line if e-mail is used. To help the Commission process and review your comments more efficiently, please use only one method. The Commission will post all comments on the Commission's Internet Web site (*http://www.sec.gov/rules/sro.shtml*). Copies of the submission, all subsequent amendments, all written statements with respect to the proposed rule change that are filed with the Commission, and all written communications relating to the proposed rule change between the Commission and any person, other than those that may be withheld from the public in accordance with the provisions of 5 U.S.C. 552, will be available for inspection and copying in the Commission's Public Reference Room. Copies of the filing also will be available for inspection and copying at the principal office of the PCX. All comments received will be posted without change; the Commission does not edit personal identifying information from submissions. You should submit only information that you wish to make available publicly. All submissions should refer to File Number SR–PCX–2005–76 and should be submitted on or before November 22, 2005.

IV. Commission's Findings and Order Granting Accelerated Approval of Proposed Rule Change

The Commission finds that the proposed rule change, as amended, is consistent with the requirements of the Act and the rules and regulations thereunder applicable to a national securities exchange.[20] Specifically, the Commission believes that the proposal is consistent with section 6(b)(7) of the Act,[21] which requires that the rules of an exchange provide a fair procedure for the discipline of its members and persons associated with its members. The Commission also believes that the proposal is reasonably designed to provide a more efficient disciplinary process to address violations of the Exchange's rules and the federal securities laws by the Exchange's members.

Under the Exchange's proposal, a Respondent may propose an uncontested offer of settlement to the Exchange's Department of Enforcement in response to the initiation of a disciplinary inquiry by the Department of Enforcement.[22] If the Respondent submits an uncontested offer of settlement before a hearing on the merits has begun, then the Department of Enforcement would transmit the uncontested offer, along with a proposed decision, to the Exchange's General Counsel for consideration. Specifically, if a Respondent submits an uncontested offer of settlement before the issuance of a complaint, and the General Counsel accepts it, then the Department of Enforcement would issue the decision and notify the parties. If a Respondent submits an uncontested offer of settlement after the Department of Enforcement has already issued a complaint, and the General Counsel accepts it, then the General Counsel would issue the decision and notify the parties. Finally, if the Respondent submits an uncontested offer of settlement after a hearing on the merits has begun, then the Department of Enforcement would transmit the uncontested offer, along with a proposed decision, to the Conduct Panel for consideration. If the Conduct Panel accepts the decision, then the General Counsel would issue the decision and notify the parties.

The Commission believes that the involvement of the Exchange's General Counsel in considering uncontested offers of settlement submitted before a hearing on the merits has begun should be an appropriate safeguard and provides for an appropriate separation of functions at the Exchange. Further, the Commission believes that the proposal is reasonably designed to advance the interests of the Exchange's Department of Enforcement in efficiently and expeditiously resolving disciplinary cases when an uncontested offer of settlement is made before the commencement of a hearing on the merits without the involvement of the BCC, while providing for review and consideration of possible violations. In particular, the Commission believes that the involvement of the Department of Enforcement and General Counsel in considering and rendering decisions on uncontested offers of settlement before the commencement of a hearing on the merits is appropriate, given the Respondent's choice to propose settlement terms that the Exchange's Department of Enforcement considers acceptable.

Additionally, the proposal allows a Respondent, after a complaint has been issued, to submit an offer of settlement for consideration that is otherwise opposed on its terms, *i.e.*, contested, by the Exchange's Department of Enforcement. If submitted before a hearing on the merits, a contested offer of settlement would be considered by the BCC. If a Respondent submits a contested offer of settlement after a hearing on the merits has begun, the offer would be considered by the Conduct Panel. The Commission believes that this process is reasonably designed to allow Respondents to have their contested offers of settlement considered by the BCC or the Conduct Panel when the offer would otherwise be opposed by the Exchange's Department of Enforcement. In addition, the Commission believes that this process balances the Exchange's interests in achieving efficient resolutions of disciplinary matters with its members' interests in having a process through which they can submit contested offers of settlement for consideration by the BCC or the Conduct Panel. The Commission notes that under current PCXE Rule 10, all offers of settlement are considered by the BCC.

In particular, the Commission notes that contested offers of settlement submitted after the issuance of a complaint but before the commencement of a hearing on the merits would be considered by the BCC, and contested offers of settlement submitted after the issuance of a complaint and after the commencement of a hearing on the merits would be considered by the Conduct Panel. The Commission believes that this procedure provides a fair process by which the Exchange's members may take their contested offers of settlement before the BCC or Conduct Panel.[23]

[20] In approving this proposed rule change, as amended, the Commission has considered its impact on efficiency, competition, and capital formation. *See* 15 U.S.C. 78c(f).

[21] 15 U.S.C. 78f(b)(7).

[22] The Exchange represents that it contacts a Respondent before any complaint is issued, such that the Respondent would be in a position to ascertain whether the terms of any contemplated offer of settlement would be ''uncontested'' or ''contested'' by the Exchange's Department of Enforcement.

[23] Pursuant to PCXE Rule 3.2(b)(1)(A), the BCC shall be composed of, in addition to any members of the public, a minimum of one ETP Holder or allied person of an ETP Holder.

Moreover, the proposed rule change sets forth in detail provisions relating to the content and signature requirements for offers of settlement, as well as waivers of certain rights upon submission of an offer of settlement. Additionally, the proposal provides for quarterly review by the BCC and the Board Appeals Committee of final disciplinary actions in order to provide the Department of Enforcement and General Counsel with guidance on future settlement practices and settlement amounts. The Commission believes that this provision is reasonably designed to provide for BCC and Board input, albeit on a prospective basis only, on the Exchange's disciplinary program, thereby providing a mechanism for the Board to comply with the self-regulatory organization's responsibility to maintain an adequate and effective disciplinary system.

The Commission finds good cause for approving this proposal before the thirtieth day after the publication of notice thereof in the **Federal Register**. Accelerating approval of the proposal will allow the Exchange to implement, without undue delay, a more efficient process for reviewing and deciding upon offers of settlement, while maintaining ETP Holder involvement in the settlement process. In addition, the Commission notes that the NASD has a substantially similar rule with respect to offers of settlement.

V. Conclusion

It is therefore ordered, pursuant to section 19(b)(2) of the Act,[24] that the proposed rule change, as amended (SR–PCX–2005–76), is hereby approved on an accelerated basis.

For the Commission, by the Division of Market Regulation, pursuant to delegated authority.[25]

Jonathan G. Katz,

Secretary.

[FR Doc. E5–6026 Filed 10–31–05; 8:45 am]

BILLING CODE 8010–01–P

[24] 15 U.S.C. 78s(b)(2).

[25] 17 CFR 200.30–3(a)(12).

SECURITIES AND EXCHANGE COMMISSION

[Release No. 34–52667; File No. SR-Phlx-2005–25]

Self-Regulatory Organizations; Philadelphia Stock Exchange, Inc.; Order Granting Approval to a Proposed Rule Change and Amendments No. 2, 3, and 5 Thereto Relating to the Adoption of New Rules That Would Establish an Automated Opening System on the Exchange

October 25, 2005.

I. Introduction

On April 21, 2005, the Philadelphia Stock Exchange, Inc. (''Phlx'' or ''Exchange'') filed with the Securities and Exchange Commission (''Commission'') pursuant to Section 19(b)(1) of the Securities Exchange Act of 1934 (''Act'')[1], and Rule 19b–4[2] thereunder, a proposed rule change that would establish an automated opening system on the Exchange. The Exchange submitted Amendments No. 1,[3] 2,[4] and 3[5] to its proposal on June 1, 2005, September 1, 2005, and September 14, 2005, respectively. The proposed rule change, as amended, was published for comment in the **Federal Register** on September 22, 2005.[6] No comments were received on the proposal. The Phlx submitted Amendment No. 4[7] on September 23, 2005, and Amendment No. 5[8] on September 26, 2005. This order approves the proposed rule change, as amended.

[1] 15 U.S.C. 78s(b)(1).

[2] 17 CFR 240.19b–4.

[3] *See* Form 19b–4, dated June 1, 2005 (''Amendment No. 1''). Amendment No. 1 replaced the original filing in its entirety.

[4] *See* Form 19b–4, dated September 1, 2005 (''Amendment No. 2''). Amendment No. 2 replaced Amendment No. 1 in its entirety.

[5] *See* Form 19b–4, dated September 14, 2005 (''Amendment No. 3''). In Amendment No. 3, Phlx, in part, deleted proposed rule text to clarify that during a manual opening all market orders are to be executed at one price.

[6] *See* Securities Exchange Act Release No. 52448 (September 15, 2005), 70 FR 55650.

[7] *See* Form 19b–4, dated September 23, 2005. The Exchange subsequently submitted Amendment No. 5, which was intended to supercede and replace Amendment No. 4. As a result, the Exchange withdrew Amendment No. 4 on October 19, 2005. *See* Form 19b–4, dated October 19, 2005.

[8] *See* Form 19b–4, dated September 26, 2005. In Amendment No. 5, the Exchange made technical changes to accurately reflect the differences between proposed rule language and current rule text, as well as made technical changes to better conform Exhibits 4 and 5 to each other. The Act does not require notice and comment for technical amendments.

II. Description of the Proposed Rule Change

In July 2004, the Exchange began trading options on its new electronic options trading platform, Phlx XL.[9] Because Phlx XL does not currently include an automated opening functionality, specialists are currently required to open option series manually. The proposed rule change would establish a fully automated opening system for options traded on Phlx XL as part of the Phlx XL system.

Pre-Opening

For a period of time before the scheduled opening in the underlying security (and not less than one hour as determined by the Options Committee with notice to the membership via Exchange circular), Phlx XL will accept orders and quotes during the ''Pre-Opening Phase.'' The Phlx XL system will disseminate to specialists, Streaming Quote Traders (''SQTs''), Remote Streaming Quote Traders (''RSQTs''), and non-SQT ROTs who are required to submit continuous two-sided electronic quotations pursuant to Exchange Rule 1014(b)(ii)(E)[10] (collectively, for purposes of proposed Phlx Rule 1017, ''Phlx XL participants'') information about resting orders on the book that remain from the previous trading session and orders submitted prior to the opening.

Calculation of Opening Price

The system will calculate an Anticipated Opening Price (''AOP'') and Anticipated Opening Size (''AOS'') when a quote or trade has been disseminated by the primary market for the underlying security, under the conditions set forth below. The specialist assigned in the particular option must enter opening quotes not later than one minute following the dissemination of a quote or trade by the primary market for the underlying security.

An AOP may be calculated only if: (i) The Exchange has received market orders, or the book is crossed (highest bid is higher than the lowest offer) or locked (highest bid equals the lowest offer); and (ii) either (A) the specialist's

[9] *See* Securities Exchange Act Release No. 50100 (July 27, 2004), 69 FR 44612 (August 3, 2004) (SR–Phlx–2003–59).

[10] Exchange Rule 1014(b)(ii)(E) requires non-SQT ROTs who transact more than 20% of their contract volume in an option electronically versus in open outcry during a particular calendar quarter to submit proprietary electronic quotations in such an option during the subsequent calendar quarter for a certain number of series in such option, depending on the percent of total volume transacted electronically versus in open outcry on the Exchange in such option.

quote has been submitted; (B) the quotes of at least two Phlx XL participants that are required to submit continuous, two-sided quotes in 100% of the series in all option issues in which such Phlx XL participant is assigned (''100% participants''),[11] have been submitted within two minutes of the opening trade or quote on the primary market for the underlying security (or such shorter time as determined by the Options Committee and disseminated to the membership via Exchange Circular); or (C) if neither the specialist's quote [12] nor the quotes of two 100% participants have been submitted within two minutes of the opening trade or quote on the primary market for the underlying security (or such shorter time as determined by the Options Committee and disseminated to the membership via Exchange Circular), one 100% participant has submitted its quote.

Opening Order/Quote Imbalance

In situations where an AOP may be calculated (*i.e.*, when the conditions described above are present) and there is an order/quote imbalance, the system will immediately send an imbalance notice indicating the imbalance side (buy or sell) and the AOP and AOS (an ''Imbalance Notice'') to Phlx XL participants assigned to the options class provided that the primary market for the underlying security has disseminated an opening quote or trade. Phlx XL participants may then submit their opening or revised opening quotes. Thereafter the system will disseminate an updated Imbalance Notice every five seconds (or such shorter period as determined by the Options Committee and disseminated to membership via Exchange Circular) until the series is open. If no imbalance exists, no Imbalance Notice will be sent, and the system will establish an opening price as described below.

Actual Opening Price

The proposal would establish the opening price of a series in situations where there is no opening quote/order imbalance. Proposed Phlx Rule 1017(c)(i) would define the opening price as the price at which the maximum quantity of contracts would be traded. The proposed rule would establish a series of ''tie-breakers'' that the system would follow in establishing the opening price when two or more prices would satisfy the maximum quantity criteria. Specifically, when the maximum quantity of contracts could be traded at two or more prices, the system would establish the opening price based on the following criteria, in order: (1) The price at which the greatest number of customer orders would be traded; (2) the price at which the maximum number of Phlx XL participants would trade; and (3) the price that is closest to the closing price from the previous trading session.

Priority on Openings

The system will give priority to market orders first (including a limit order to buy which is at a higher price than the price at which the option is to be opened and a limit order to sell which is at a lower price than the price at which the option is to be opened, which will be treated as market orders), then to resting limit orders at the opening price.

Contingency, Hedge, and Synthetic Option Orders

Contingency Orders, Hedge Orders, and Synthetic Option Orders, as defined in Exchange Rule 1066, are not considered in the determination of the opening price, and do not participate in the opening trade because such order types generally include two or more option components, and may also include a stock component.

Floor-Brokered Orders

To be considered in the determination of the opening price and to participate in the opening trade, orders represented by Floor Brokers must be entered onto the book electronically.

Inbound Orders and Quotes Received While the System Completes the Opening Trade

Inbound orders and quotes will not be included in the calculation of the opening price for a brief period established by the system (and thus not within the discretion of any Phlx XL participant) while the system is in the process of completing the opening trade. During such brief period, such inbound orders and quotes will be entered into the Phlx XL system in order of their arrival.

Proposed Rule 1017(d) would provide that, as the opening price is determined by series, the system will disseminate through OPRA the opening trade price, if any, and then the quote after the series is open. The system will process and open the series for a given option in random order. If there are no orders in a particular series when the underlying security opens, the Exchange will disseminate quotations at the best bid and offer in such series submitted by Phlx XL participants assigned in the particular option.

Situations in Which the Option Series Will Not Open

The proposed rule would set forth three conditions under which the system will not open a series. First, the system will not open a series when there is no quote from the specialist or a 100% participant. Second, the system will not open a series when the opening price is not within an acceptable range (as determined by the Options Committee and announced to Exchange members and member organizations by way of Exchange Circular) compared to the highest offer and the lowest bid (*e.g.*, the upper boundary of the acceptable range may be 125% of the highest quote offer and the lower boundary may be 75% of the lowest quote bid). Third, the system will not open a series when the opening trade would leave a market order imbalance (*i.e.*, there are more market orders to buy or to sell for the particular series than can be satisfied by the limit orders, market orders and quotes on the other side of the market).

No Specialist or 100% Participant Quote or Quote Outside Acceptable Range

If the specialist or a Phlx XL participant with a 100% quoting requirement is not quoting as described in proposed Phlx Rule 1017(e)(i), or if the opening price is not within an acceptable range as described in proposed Phlx Rule 1017(e)(ii), proposed Phlx Rule 1017(f) would provide that two Floor Officials may authorize the manual opening of the affected series where necessary to ensure a fair and orderly market. In such a circumstance, the Exchange's existing rules concerning manual openings would apply.[13]

Manual Opening by Specialist

Proposed Phlx Rule 1017(g)(i) would provide that if a condition or the absence of a required condition not otherwise covered by the proposed rule would prevent an opening trade to occur, the specialist may, with prior notification to Market Surveillance staff, determine to open a series manually in

[11] An example of a 100% participant is a new category of ROT on the Exchange known as a ''Directed SQT'' or a ''Directed RSQT,'' defined as an SQT or RSQT that receives a Directed Order. *See* Securities Exchange Act Release No. 51759 (May 27, 2005), 70 FR 32860 (June 6, 2005) (SR–Phlx–2004–91).

[12] For example, a specialist may not submit a quote due to systems malfunctions. A specialist, however, who fails to submit opening quotes within one minute of the opening on the primary market would be subject to possible disciplinary action.

[13] *See, e.g.*, the Commentary to Phlx Rule 1017, Phlx Rules 1047, 1047A, and OFPAs A–12, A–14 and G–2.

the interest of a fair and orderly market, subject to the approval of two Floor Officials within five minutes of the opening of the affected series. Manual openings would be required to be conducted in accordance with current Commentary .01–.03 of Exchange Rule 1017.

Index Options

Under the proposal, with respect to automated openings in an Industry or Market Index conducted pursuant to Phlx Rule 1017, the specialist may engage the automated opening system to open such options when underlying securities representing 50% of the current index value of all the securities underlying the index have opened for trading on the primary market. The system will automatically open all index options when underlying securities representing 100% of the current index value of all the securities underlying the index have opened for trading on the primary market.[14]

Reopening Following a Trading Halt

The procedure described in the proposed Rule may be used to reopen an option after a trading halt.

Conforming Amendments to Current Exchange Rules and OFPAs

In addition to the proposed amendments to Exchange Rule 1017, the Exchange is proposing various conforming amendments to current Exchange rules and OFPAs that relate to openings and re-openings following a trading halt, as well as deleting references to obsolete procedures and modifying certain processes.

The Exchange proposes to delete Commentary .03(d)(iii) from Exchange Rule 1017, which currently states that the specialist will not open a series when there is a market on opening order with no corresponding order. The Exchange currently does not accept market on opening orders and thus Commentary .03(d)(iii) is unnecessary.

The Exchange proposes to amend Exchange Rules 1047 and 1047A and OFPAs A–12 and G–2 to reflect an automated opening conducted pursuant to Exchange Rule 1017 shall be considered a ''trading rotation'' for purposes of these rules and OFPAs. These rules would also be amended to include the term ''Market Surveillance officer'' to conform to current Exchange staff structure.

Exchange Rule 1047(c) would be amended to reflect that two Floor Officials (with the concurrence of a Market Surveillance officer) and not the appropriate Floor Standing Committee as reflected in the current rule would have the authority, respecting a particular class or series of option, to delay the opening, to halt and reopen after a halt, and to open where the underlying stock or ETF has not opened.

Exchange Rule 1047 would be further amended to delete all references to the Series Opening Request Ticket (''SORT'') Procedure, an obsolete procedure that is no longer in use on the Exchange. The Exchange proposes a similar amendment to OFPA A–12 Opening Rotations and SORT Procedures.

Commentary .02 to Exchange Rule 1047 would be amended to require the specialist to inform the Market Surveillance staff in the event that trading in an underlying stock or Exchange-Traded Fund Share has not opened in the primary market for such stock or Exchange-Traded Fund Share within a reasonable time after the opening of business, or, in the event that current quotations for any underlying foreign currency are for any reason unavailable. Market Surveillance staff would then take the appropriate steps to determine the cause of such delay or unavailability, rather than the chairman of the appropriate Floor Standing Committee or his delegate on the floor, as the rule currently provides.

For consistency, OFPA A–12 would be amended to establish that the acceptable range within which the opening price must be established, would apply to both automated openings and manual openings conducted pursuant to Exchange Rule 1017 and the Commentary thereto. A similar amendment is proposed respecting OFPA A–14, Equity Option and Index Option Opening Parameters. The Exchange also proposes to delete references to Super Cap Index options from OFPA G–2, because the Exchange no longer lists this product.

Deployment of the Automated Opening System

The Exchange represents that it would deploy the automated opening system on an issue-by-issue basis. According to the Exchange, at least 10 issues would be deployed on the system within four weeks from the date of Commission approval of the proposed rule change, and all options traded on the Exchange would be deployed on the system within twelve weeks of such approval.

III. Discussion

After careful consideration, the Commission finds that the proposed rule change, as amended, is consistent with the requirements of the Act and the rules and regulations thereunder applicable to a national securities exchange and, in particular, the requirements of section 6 of the Act.[15] Specifically, the Commission finds that the proposal is consistent with section 6(b)(5) of the Act,[16] which requires, in part, that the rules of an exchange be designed to promote just and equitable principles of trade, to remove impediments to and perfect the mechanism of a free and open market and a national market system, and, in general, to protect investors and the public interest.[17]

The Commission believes that the proposed automated opening system may facilitate an expedited opening of options on Phlx and thereby improve market efficiency for all market participants. Moreover, the Commission believes that the proposed rules should provide transparency to all market participants with respect to the manner in which an opening price is determined on the Exchange and ensure that the opening is conducted in a fair and orderly fashion.

The Commission also believes that the Exchange's proposal to allow two Floor Officials with the concurrence of a Market Surveillance Officer, rather than the appropriate Floor Standing Committee, to, among other things, delay the opening, halt and reopen after a halt, and open where the underlying stock or ETF has not opened, may facilitate the decision making process. Furthermore, the Commission notes that this approval structure is substantially similar to an existing rule of the American Stock Exchange LLC.[18]

IV. Conclusion

It is therefore ordered, pursuant to section 19(b)(2) of the Act,[19] that the proposed rule change (SR–Phlx–2005–25), as amended, is approved.

[14] The Exchange proposes to amend Phlx Rule 1047A and OFPA G–2 to require the opening of an Industry Index when 100% of the current index value of all the securities underlying the index have opened for trading on the primary market.

[15] 15 U.S.C. 78f.

[16] 15 U.S.C. 78f(b)(5).

[17] In approving this proposal, the Commission has considered the proposed rule's impact on efficiency, competition, and capital formation. 15 U.S.C. 78c(f).

[18] *See* Amex Rule 918(c).

[19] 15 U.S.C. 78s(b)(2).

For the Commission, by the Division of Market Regulation, pursuant to delegated authority.[20]

Jonathan G. Katz,

Secretary.

[FR Doc. E5–6027 Filed 10–31–05; 8:45 am]

BILLING CODE 8010–01–P

SECURITIES AND EXCHANGE COMMISSION

[Release No. 34–52651; File No. SR–SCCP–2004–03]

Self-Regulatory Organizations; Stock Clearing Corporation of Philadelphia; Order Granting Approval of a Proposed Rule Change Relating to Anonymous Features on Trading Systems

October 21, 2005.

I. Introduction

On August 5, 2004, the Stock Clearing Corporation of Philadelphia (''SCCP'') filed with the Securities and Exchange Commission (''Commission'') proposed rule change SR–SCCP–2004–03 pursuant to Section 19(b)(1) of the Securities Exchange Act of 1934 (''Act'').[1] On September 7, 2004, SCCP amended the proposed rule change. Notice of the proposal was published in the **Federal Register** on August 10, 2005.[2] No comment letters were received. For the reasons discussed below, the Commission is granting approval of the proposed rule change with the conditions set forth below.

II. Description

The rule change allows SCCP to process trades executed on a trading system that provides for anonymous trading.[3] Pursuant to the rule change, SCCP will be able in the future to receive locked-in trade data from a trading system that provides anonymity. In such a situation, SCCP would report such trades to its members using an anonymous acronym instead of naming or identifying the actual contraside.

In the event that SCCP ceases to act for a member involved in anonymous trading, the operator of the trading system shall have the responsibility to identify to its users the trades, which are generally included in reports produced by SCCP, involving the affected member. SCCP would forward to the operator of the trading system the appropriate information to facilitate its notification of its users. In addition, should SCCP receive information from NSCC that NSCC had ceased to act for an NSCC member that was an unidentified contraside of any such trade, SCCP would also forward this information to the operator of the trading system.[4]

III. Discussion

Section 17A(b)(3)(F) of the Act provides that the rules of a clearing agency should be designed to promote the prompt and accurate clearance and settlement of securities transactions.[5] To benefit from the advantages of an anonymous trading system, parties to anonymous trades need to keep their identities anonymous in any reports provided to counterparties as part of the clearance and settlement of the trades. By allowing SCCP to use an acronym in place of the name or identity of contrasides of anonymous trades in the trade reports it provides to its members, the proposed rule change allows the parties to anonymous trades to preserve their anonymity and thus to preserve the benefits associated with executing anonymous trades. Accordingly, the proposed rule change is designed to promote the prompt and accurate clearance and settlement of securities transactions conducted on anonymous trading systems by allowing such trades to be cleared and settled through SCCP and therefore receive the benefits and efficiencies SCCP offers as a registered clearing agency.

As a condition of this approval, SCCP will notify the Commission in writing before it begins processing trades executed on each anonymous trading system. Such notification shall include such information as the name of the anonymous trading system, the operator and/or owner of the anonymous trading system, the proposed processing start date, and any other relevant information requested by the Commission.

IV. Conclusion

On the basis of the foregoing, the Commission finds that the proposed rule change is consistent with the requirements of the Act and in particular Section 17A of the Act and the rules and regulations thereunder.

It is therefore ordered, pursuant to Section 19(b)(2) of the Act, that the proposed rule change (File No. SR–SCCP–2004–03) be and hereby is approved.

For the Commission by the Division of Market Regulation, pursuant to delegated authority.[6]

Jonathan G. Katz,

Secretary.

[FR Doc. E5–6016 Filed 10–31–05; 8:45 am]

BILLING CODE 8010–01–P

[20] 17 CFR 200.30–3(a)(12).

[1] 15 U.S.C. 78s(b)(1).

[2] Securities Exchange Act Release No. 52201 (August 3, 2005), 70 FR 46565.

[3] SCCP's rule change is similar to a rule change approved by the Commission in 2003 that allowed the National Securities Clearing Corporation (''NSCC'') to accommodate the reporting of trades executed on a system that provides trading anonymity. Securities Exchange Act Release No. 48526 (September 23, 2003), 68 FR 56367 (September 30, 2003) [File No. SR–NSCC–2003–14].

[4] NSCC's anonymous trading procedure includes similar notification requirements.

[5] 15 U.S.C. 78q–1(a)(A)(B).

[6] 17 CFR 200.30–3(a)(12).

SMALL BUSINESS ADMINISTRATION

[Disaster Declaration #10180 and #10181]

Alabama Disaster Number AL–00003

AGENCY: Small Business Administration.

ACTION: Amendment 4.

SUMMARY: This is an amendment of the Presidential declaration of a major disaster for the State of Alabama (FEMA–1605–DR), dated 08/29/2005.

Incident: Hurricane Katrina.

Incident Period: 08/29/2005 through 09/26/2005.

Effective Date: 10/20/2005.

Physical Loan Application Deadline Date: 01/11/2006.

EIDL Loan Application Deadline Date: 05/29/2006.

ADDRESSES: Submit completed loan applications to: Small Business Administration, National Processing and Disbursement Center, 14925 Kingsport Road, Fort Worth, TX 76155.

FOR FURTHER INFORMATION CONTACT: A. Escobar, Office of Disaster Assistance, U.S. Small Business Administration, 409 3rd Street, Suite 6050, Washington, DC 20416.

SUPPLEMENTARY INFORMATION: The notice of the President's major disaster declaration for the State of Alabama, dated 08/29/2005, is hereby amended to extend the deadline for filing applications for physical damages as a result of this disaster to 01/11/2006.

All other information in the original declaration remains unchanged.

(Catalog of Federal Domestic Assistance Numbers 59002 and 59008)

Herbert L. Mitchell,

Associate Administrator for Disaster Assistance.

[FR Doc. 05–21678 Filed 10–31–05; 8:45 am]

BILLING CODE 8025–01–P

SMALL BUSINESS ADMINISTRATION

[Disaster Declaration #10176 and #10177]

Louisiana Disaster Number LA–00002

AGENCY: Small Business Administration.

ACTION: Amendment 1.

SUMMARY: This is an amendment of the Presidential declaration of a major disaster for the State of Louisiana (FEMA–1603–DR), dated 08/29/2005.

Incident: Hurricane Katrina.

Incident Period: 08/29/2005 and continuing.

Effective Date: 10/15/2005.

Physical Loan Application Deadline Date: 01/11/2006.

EIDL Loan Application Deadline Date: 05/29/2006.

ADDRESSES: Submit completed loan applications to: Small Business Administration, National Processing and Disbursement Center, 14925 Kingsport Road, Fort Worth, TX 76155.

FOR FURTHER INFORMATION CONTACT: A. Escobar, Office of Disaster Assistance, U.S. Small Business Administration, 409 3rd Street, Suite 6050, Washington, DC 20416.

SUPPLEMENTARY INFORMATION: The notice of the President's major disaster declaration for the State of Louisiana, dated 08/29/2005, is hereby amended to extend the deadline for filing applications for physical damages as a result of this disaster to 01/11/2006.

All other information in the original declaration remains unchanged.

(Catalog of Federal Domestic Assistance Numbers 59002 and 59008)

Herbert L. Mitchell,

Associate Administrator for Disaster Assistance.

[FR Doc. 05–21679 Filed 10–31–05; 8:45 am]

BILLING CODE 8025–01–P

SMALL BUSINESS ADMINISTRATION

[Disaster Declaration #10205 and #10206]

Louisiana Disaster Number LA–00004

AGENCY: Small Business Administration.

ACTION: Amendment 7.

SUMMARY: This is an amendment of the Presidential declaration of a major disaster for the State of Louisiana (FEMA–1607–DR), dated 09/24/2005.

Incident: Hurricane Rita.

Incident Period: 09/23/2005 and continuing.

Effective Date: 10/15/2005.

Physical Loan Application Deadline Date: 01/11/2006.

EIDL Loan Application Deadline Date: 06/26/2006.

ADDRESSES: Submit completed loan applications to: Small Business Administration, National Processing and Disbursement Center, 14925 Kingsport Road, Fort Worth, TX 76155.

FOR FURTHER INFORMATION CONTACT: A. Escobar, Office of Disaster Assistance, U.S. Small Business Administration, 409 3rd Street, Suite 6050, Washington, DC 20416.

SUPPLEMENTARY INFORMATION: The notice of the President's major disaster declaration for the State of Louisiana, dated 09/24/2005, is hereby amended to extend the deadline for filing applications for physical damages as a result of this disaster to 01/11/2006.

All other information in the original declaration remains unchanged.

(Catalog of Federal Domestic Assistance Numbers 59002 and 59008)

Herbert L. Mitchell,

Associate Administrator for Disaster Assistance.

[FR Doc. 05–21680 Filed 10–31–05; 8:45 am]

BILLING CODE 8025–01–P

SMALL BUSINESS ADMINISTRATION

[Disaster Declaration #10178 and #10179]

Mississippi Disaster Number MS–00005

AGENCY: Small Business Administration.

ACTION: Amendment 3.

SUMMARY: This is an amendment of the Presidential declaration of a major disaster for the State of Mississippi (FEMA–1604–DR), dated 08/29/2005.

Incident: Hurricane Katrina.

Incident Period: 08/29/2005 through 10/14/2005.

EFFECTIVE DATE: 10/20/2005.

Physical Loan Application Deadline Date: 01/11/2006.

EIDL Loan Application Deadline Date: 05/29/2006.

ADDRESSES: Submit completed loan applications to: Small Business Administration, National Processing and Disbursement Center, 14925 Kingsport Road, Fort Worth, TX 76155.

FOR FURTHER INFORMATION CONTACT: A. Escobar, Office of Disaster Assistance, U.S. Small Business Administration, 409 3rd Street, Suite 6050, Washington, DC 20416.

SUPPLEMENTARY INFORMATION: The notice of the President's major disaster declaration for the State of Mississippi, dated 08/29/2005, is hereby amended to extend the deadline for filing applications for physical damages as a result of this disaster to 01/11/2006.

All other information in the original declaration remains unchanged.

(Catalog of Federal Domestic Assistance Numbers 59002 and 59008)

Herbert L. Mitchell,

Associate Administrator for Disaster Assistance.

[FR Doc. 05–21677 Filed 10–31–05; 8:45 am]

BILLING CODE 8025–01–P

SOCIAL SECURITY ADMINISTRATION

The Ticket to Work and Work Incentives Advisory Panel Meeting

AGENCY: Social Security Administration (SSA).

ACTION: Notice of Teleconference—Rescheduled.

DATES: November 7, 2005—1 p.m. to 3 p.m. Eastern Standard Time Ticket to Work and Work Incentives Advisory Panel Conference Call Call-in number: 1–888–395–6878. Pass code: 6199207. Leader/Host: Berthy De la Rosa-Aponte.

SUPPLEMENTARY INFORMATION:

Type of meeting: The Ticket to Work and Work Incentives Advisory Panel (the ''Panel'') had scheduled a teleconference meeting for October 24, 2005. Unfortunately, Hurricane Wilma struck South Florida that morning and the teleconference had to be postponed. The teleconference has been rescheduled and will now be held on November 7, 2005. This teleconference meeting is open to the public. We are providing less than the FACA required 15 days advance notice of the rescheduled teleconference so that the teleconference can be held prior to the Panel's Quarterly meeting in November.

Purpose: In accordance with section 10(a)(2) of the Federal Advisory Committee Act, the Social Security Administration (SSA) announces this teleconference meeting of the Ticket to Work and Work Incentives Advisory Panel. Section 101(f) of Public Law 106–170 establishes the Panel to advise the President, the Congress, and the Commissioner of SSA on issues related to work incentive programs, planning, and assistance for individuals with disabilities as provided under section 101(f)(2)(A) of the Act. The Panel is also to advise the Commissioner on matters specified in section 101(f)(2)(B) of that Act, including certain issues related to the Ticket to Work and Self-Sufficiency Program established under section 101(a).

The interested public is invited to listen to the teleconference by calling the phone number listed above. Public testimony will not be taken.

Agenda: The full agenda for the meeting is currently posted on the

Internet at *http://www.ssa.gov/work/panel* or can be received, in advance, electronically or by fax upon request.

Contact Information: Records are kept of all proceedings and will be available for public inspection by appointment at the Panel office. Anyone requiring information regarding the Panel should contact the staff by:

- Mail addressed to the Social Security Administration, Ticket to Work and Work Incentives Advisory Panel Staff, 400 Virginia Avenue, SW., Suite 700, Washington, DC 20024.
- Telephone contact with Debra Tidwell-Peters at (202) 358–6430.
- Fax at (202) 358–6440 or
- E-mail to *TWWIIAPanel@ssa.gov.*

Dated: October 27, 2005.

Chris Silanskis,

Designated Federal Officer.

[FR Doc. 05–21818 Filed 10–31–05; 8:45 am]

BILLING CODE 4191–02–P

TENNESSEE VALLEY AUTHORITY

Final Environmental Impact Statement—500-kV Transmission Line in Middle Tennessee

AGENCY: Tennessee Valley Authority (TVA).

ACTION: Issuance of Record of Decision.

SUMMARY: This notice is provided in accordance with the Council on Environmental Quality's regulations (40 CFR parts 1500 to 1508) and TVA's procedures implementing the National Environmental Policy Act. TVA has decided to implement the preferred alternative identified in its Final Environmental Impact Statement (EIS), 500-kV Transmission Line in Middle Tennessee.

In implementing Alternative 1, TVA has decided to construct and operate the new 500-kV transmission line between Cumberland Fossil Plant in Stewart County, Tennessee, and TVA's Montgomery 500-kV Substation in Montgomery County, Tennessee. The 38.5-mile transmission line would be constructed within Corridor B and on the Cumberland River South and Industrial Park Central alternative alignments described in the Final EIS.

FOR FURTHER INFORMATION CONTACT: Charles P. Nicholson, Senior NEPA Specialist, Environmental Policy and Planning, Tennessee Valley Authority, 400 West Summit Hill Drive WT 9B, Knoxville, Tennessee 37902–1401; telephone (865) 632–3582 or e-mail *cpnicholson@tva.gov.*

SUPPLEMENTARY INFORMATION: TVA owns and operates a system of transmission lines that move electricity throughout the TVA service area, which comprises most of Tennessee and portions of six adjacent States, and to adjacent utilities. Electric loads on portions of this system in the Middle Tennessee area have grown steadily in the recent past and are projected to continue to grow. This load growth will soon exceed the capability of high-capacity transmission lines serving this area. In addition, the loss of two or more of these lines could result in the loss of service over a wide area and possible damage to generating equipment in at least two locations. Therefore, TVA needs to increase transmission capacity in this area.

TVA published a Notice of Intent to prepare this EIS in the **Federal Register** on November 27, 2001. Two public scoping meetings were held in December 2001 and attended by about 50 people. Written scoping comments were received from two Federal agencies, two State agencies, and several individuals. The Notice of Availability of the Draft EIS was published in the **Federal Register** on April 18, 2003. TVA held two public meetings on the Draft EIS in May 2003 and accepted comments through early July. During this period, TVA also accepted comments received during a series of eight open houses held in June 2003 to review potential transmission line routes. Comments on the Draft EIS were received from about 200 individuals and several State and Federal agencies. TVA also received petitions signed by about 400 individuals expressing opposition to various potential transmission line routes. The Notice of Availability for the Final EIS was published in the **Federal Register** on July 22, 2005. Although not required, TVA provided 30 days for comments on the Final EIS. Appendix I of the Final EIS contains summaries of and responses to the comments TVA received on the Draft EIS.

Alternatives Considered

TVA uses a detailed, comprehensive siting process when it plans its transmission line projects. This is an iterative process that takes into account important environmental and cultural resource features that become constraints on locating proposed lines. Broad study corridors are initially defined and potential line routes are subsequently located within the study corridors. Because transmission line right-of-ways (ROWs) are much narrower than the study corridors, important features that are associated with specific corridors can often be avoided when final line routes are selected. It is at this point that potential environmental impacts are more fully identifiable.

TVA identified three alternatives in the EIS.

Under Alternative 1—Cumberland-Montgomery Study Area, TVA would construct and operate a 500-kV transmission line from Cumberland Fossil Plant to the Montgomery 500-kV Substation. A new bay and additional 500-kV breakers would be installed at the Montgomery Substation. Four broad alternative corridors for this transmission line were analyzed in the EIS. Two of these corridors, the 37-mile Corridor B around the south and west side of the city of Clarksville and the 32-mile Corridor D around the north of Clarksville, were identified as identified in the Draft EIS as preferred by TVA. Following the release of the Draft EIS and the subsequent public meetings and open houses, TVA identified proposed transmission line routes within Corridors B and D. Alternative alignments were developed for some segments of both the Corridor B and D routes. Depending on the alternative alignments being considered, the Corridor B route is between 38.1 and 38.9 miles long, and the Corridor D route is between 31.8 and 37.7 miles long.

Under Alternative 2—Cumberland-Davidson Study Area, TVA would construct and operate a 500-kV transmission line from Cumberland Fossil Plant to TVA's Davidson 500-kV Substation in Davidson County, Tennessee. A new bay containing a 500-kV breaker would be installed at the Davidson Substation. Two broad alternative corridors about 50 and 51 miles long were analyzed in the EIS.

Under Alternative 3—No Action, TVA would not construct the proposed transmission line. This would result in the risk of loss of electric service in a portion of Middle Tennessee with a total load of over 4,000 megawatts. There would also be risk of loss of system stability and resultant damage to generators at TVA's Cumberland and Paradise generating plants. In order to minimize the risk of instability, generation would have to be reduced at these plants during some system conditions, further exacerbating the risk to service in Middle Tennessee.

The construction and operation of the proposed transmission line would be similar under Alternatives 1 and 2. The transmission line would use self-supporting galvanized, laced steel structures about 85 to 125 feet tall. The average distance between structures would be about 1,000 feet. The electrical conductors would consist of three sets

of three cables suspended beneath the structure cross-arms by insulators.

The transmission line would be built on a ROW 175 feet in width. TVA would purchase easements from landowners for the new ROW. Because of the need to maintain adequate clearance between tall vegetation and the transmission line conductors, as well as to provide access for construction equipment, most trees and shrubs would initially be removed from the entire width of the ROW. Trees outside of the ROW which are tall enough to pass within 10 feet of a conductor if they fell towards the line would also be removed. Following line construction, the ROW would be revegetated with low-growing plants. The ROW can be used by the landowner for many purposes that do not interfere with the maintenance and operation of the line. TVA would periodically inspect and conduct maintenance activities on the completed line. The major maintenance activity is vegetation management, conducted to maintain adequate clearance around the conductors. This would consist of both felling tall trees adjacent to the ROW and control of vegetation within the ROW. Management of vegetation within the ROW would use an integrated vegetation management approach based primarily on mechanical mowing and herbicide application.

Under both action alternatives, TVA would also construct a new bay containing a 500-kV breaker at Cumberland Fossil Plant. Depending on the transmission line route selected, an additional length of new bus work would be needed inside the plant switchyard to connect the new bay to a line pull-off structure.

TVA identified the Alternative 1 as the preferred alternative in the Draft EIS. In the Final EIS, TVA identified the Corridor B Route in the Alternative 1 Cumberland-Montgomery Study Area, with the Cumberland River South and Industrial Park Central alternative alignments, as preferred.

Comments on the Final EIS

TVA received comments on the Final EIS from six State and Federal Government agencies and from two individuals.

Some commenters stated that TVA did not adequately consider all viable alternatives to constructing a new 500-kV transmission line, including upgrading existing 161-kV transmission lines to 500-kV capacity. TVA evaluated four corridors for the Cumberland-Montgomery alternative. Corridor C, as described in Section 2.2.2.1.3 of the FEIS, offered the potential for using the right-of-ways of several existing 161-kV transmission lines and interconnecting pieces of new right-of-way. This corridor was not preferred, and subsequently not evaluated in detail in the FEIS, because of its relatively high land use impacts and because of engineering considerations. One of these considerations was the need to deenergize and dismantle 161-kV lines 18 to 24 months prior to the scheduled line completion date. This extended line outage would have presented an unacceptable risk to area electrical service. Another consideration was that the 161-kV transmission line segments have right-of-ways that are 100 feet wide and to accommodate both the 500-kV and 161-kV lines, these right-of-ways would have to be expanded to at least 175 feet wide. Numerous houses and commercial buildings occur along these 161-kV right-of-ways, and the number that would have to be purchased and demolished would be considerably greater than for either the Corridor B or Corridor D routes. These considerations would also apply to other potential routes involving upgrading existing 161-kV transmission lines to 500-kV capacity.

The Environmental Protection Agency (EPA) requested more discussion of the suitability of other types of utility rights-of-ways for co-location of a transmission line. Using non-electric rights of way to route transmission lines is often unsafe and avoided for that reason. A transmission line can cause induced currents in natural gas and petroleum pipelines, resulting in increased corrosion. While this can be addressed by retrofitting the pipeline, to do so is expensive. Conductor to ground faults from the transmission line are also a potential hazard to pipelines. TVA typically does not site transmission lines parallel to and within railroad rights-of-ways because of interference with railroad communication systems. The need to maintain electrical clearance to allow safe train passage also requires that the transmission line be some distance from the railroad, resulting in minimal overlap of right-of-ways and little savings in the required land area.

The EPA noted that the preferred route and alignments identified in the FEIS would have greater impacts on wetlands than several other route/alignment combinations analyzed in detail, and asked for more explanation of the basis for the selection. This is given below in the ''Decision'' section. The EPA also questioned how this mitigation ratio relates to permitting requirement and noted that the proposed 1:1 mitigation ratio for impacts to high quality wetlands is likely inadequate.

TVA has not yet submitted a Clean Water Act Section 404 permit application to the U.S. Army Corps of Engineers (COE). Based on the types of wetlands impacts that would occur (primarily conversion of forested wetlands to scrub-shrub and emergent wetlands, and small areas of fill for transmission structure foundations and access roads), the project will likely qualify for Section 404 Nationwide Permit 12—Utility Line Activities. It has been TVA's experience that the Nashville District COE typically does not require any compensatory wetlands mitigation in this kind of situation. The proposed 1:1 mitigation for impacts to 3.8 acres of high quality forested wetlands is amount that TVA believes is appropriate, and if COE requires additional mitigation as part of its approval, TVA would comply with this requirement.

The preferred route would affect a total of 23.2 acres of wetlands. The majority of this wetland area, 17.0 acres, is comprised of non-forested wetland types where the level of impacts would be low and wetland functionality would not be materially affected. Impacts to the affected 6.2 acres of forested wetlands would be different because of the long-term conversion of these wetlands to non-forested wetland types. While all wetlands share many important functions, forested wetlands have additional functions and attributes. As explained in the FEIS, 2.4 acres of these forested wetlands were classified as moderate quality (Category 2) and 3.8 acres were classified as high quality (Category 3). The potential for impacts is greatest for these high quality wetlands, and thus they are the focus of TVA's mitigation efforts. The 1:1 mitigation ratio would offset the overall loss of forested wetland functions that would result from the conversion from forested to non-forested wetland types and is consistent with the 1990 Memorandum of Agreement between EPA and COE on determining mitigation under Section 404 guidelines.

The EPA requested additional discussion on the application of the 300/1200 foot buffers to reduce exposure to electric and magnetic field (EMF) buffers from transmission lines paralleling highways. During the line routing process, TVA establishes 300-foot buffers around occupied buildings other than schools and 1200-foot buffers around schools. TVA does not establish buffers along highways, although in practice stretches of highways are buffered from the transmission line due

to the buffers around buildings adjacent to highways.

The EPA requested clarification of the environmental justice information. TVA considers potential environmental justice effects as a matter of policy. FEIS Figure 4–1 shows the percent nonwhite population by census block group for the Cumberland-Montgomery study area and Table 4–5 lists the actual percentages for the census tracts along the Corridor B and Corridor D routes. The individual census tracts were not mapped because their small size would make interpretation of the map difficult. All of the census block groups with nonwhite populations greater than 25 percent are in Montgomery County in the immediate vicinity of Clarksville or north of U.S. Highway 79. Nonwhites comprise 4.7, 26.8, and 19.8 percent of the populations of Stewart County, Montgomery County, and Tennessee, respectively. None of the census blocks along the Corridor B route in Montgomery County have nonwhite populations that exceed county-wide or state proportions. The nonwhite population for the one Corridor B census block in Stewart County is 6.9 percent, higher than the county average and much lower than the state average.

The proportions of the population below poverty level in Stewart County, Montgomery County, and Tennessee are 12.4, 10.0, and 13.5 percent, respectively. None of the census tracts along the Corridor B route (listed in FEIS Table 4–5) have poverty rates significantly greater than the state rate and three tracts slightly exceed the local county rates. Because of the low potential for disproportionate impacts to disadvantaged populations that would result from selection of the Corridor B route, TVA has determined that measures to mitigate environmental justice impacts are not necessary.

Decision

TVA has decided to implement the preferred alternative identified in the Final EIS, Alternative 1 with the Corridor B route and Cumberland River South and Industrial Park Central alternative alignments.

Alternative 1—Cumberland-Montgomery Study Area was selected over Alternative 2—Cumberland-Davidson Study Area because of the shorter line length, lower level of impacts to several natural resources, and lower cost. Within the Alternative 1 study area, Corridors B and D were selected as the preferred corridors in the Draft EIS based on a combination of engineering attributes, natural and cultural features, and land use attributes. Among other attributes, these two corridors were the shortest and contained the smallest area of forest. The Final EIS contains a detailed comparison of proposed line routes in Alternative 1—Cumberland Montgomery Study Area Corridors B and D.

The selection of the Alternative 1 Cumberland-Montgomery Study Area Corridor B Route over the Corridor D route was based on several factors. While shorter and with less impacts on wetlands and less forest fragmentation, the Corridor D Route would require the relocation of more residences and have a greater impact on planned residential and commercial development. A portion of it would have been located on or very close to Fort Campbell Military Base, potentially interfering with aircraft operations. It would also have affected the Ringgold Mill Complex historic site.

The Cumberland River South alternative alignment of the Corridor B Route was selected over the Cumberland River North alignment in order to avoid ongoing residential development and land suitable for future development. The selected alignment also avoids an agricultural area with extensive underground drainage that the Cumberland River North alignment would have crossed.

At the eastern end of the Corridor B Route, the Industrial Park Central alternative alignment was selected over the Industrial Park East and Industrial Park West alignments because of its shorter length and reduced amount of right-of-way to be acquired. The Industrial Park Central alignment also runs parallel to and shares part of the right-of-way of an existing 500-kV transmission line, further reducing the amount of new right-of-way to be acquired and land use impacts.

In reaching this decision, TVA has carefully considered the comments and concerns voiced by the public. Based on the comments TVA received during the scoping and EIS review processes, the effects on landowners from having the transmission line built on or near their property was a major concern. TVA has attempted to minimize these impacts during the transmission line siting process, and the selected route affects slightly fewer landowners than the Corridor D Route. It also would require fewer residential relocations and have fewer buildings within 300 feet of the line. Commenters also expressed concerns about impacts to cultural and natural resources. The selected Corridor B Route would have less impact on cultural resources than the Corridor D Route, and the Tennessee State Historic Preservation Officer has concurred with TVA's determination that the Corridor B Route would not adversely affect any archaeological or historic sites eligible for or listed in the National Register of Historic Places. The U.S. Fish and Wildlife Service has concurred with TVA's determination that the Corridor B Route would not adversely affect species listed under the Endangered Species Act.

Environmentally Preferred Alternative

Alternative 3—No Action is the environmentally preferred alternative because the impacts associated with constructing and operating a high voltage transmission line would not occur. This alternative, however, would result in the risk of the loss of electrical service to a large area of Middle Tennessee with a total load of over 4000 megawatts and is considered unreasonable. The loss of this electrical service would result in social and economic impacts.

Of the two action alternatives, Alternative 1—Cumberland-Montgomery Study Area is environmentally preferred over Alternative 2—Cumberland-Davidson Study Area. Potential transmission line routes in the Alternative 1 study area average about 20 percent shorter than those in the Alternative 2 study area and would require the purchase of less right-of-way and have less impact to forests, wildlife populations, and streams.

Neither of the two Alternative 1—Cumberland-Montgomery Study Area transmission line routes studied in further detail, the Corridor B route and the Corridor D route, is clearly environmentally preferable over the other. Of the various alternative alignments for the selected Corridor B route, the Cumberland River North alignment is environmentally preferable over the selected Cumberland River South alignment because of less impact on wetlands, ecologically significant sites, and forested stream crossings. None of the Industrial Park alternative alignments are clearly environmentally preferable over the others.

Environmental Commitments

For the reasons discussed in the Final EIS and summarized here, TVA is committing to the following measures to avoid, reduce, or mitigate the potential environmental impacts associated with these actions:

- In order to reduce potential impacts to groundwater, TVA will not apply herbicides aerially along the ROW between a point about 0.4 miles northeast of Highway 12 (at transmission line structure 136) and the Montgomery 500-kV Substation. The

use of fertilizers will also be avoided or minimized in this area.

• In order to reduce the impacts to wetlands, TVA will provide compensatory mitigation for 3.8 acres of high quality forested wetlands at a 1:1 ratio. Compensatory mitigation measures include, but are not limited to, the purchase of credits in an existing mitigation bank within the hydrologic unit for the project area or an adjacent hydrologic unit, and restoration of forested wetlands in or adjacent to the project area hydrologic unit by TVA or through an in-lieu-fee agreement with a state agency or private conservation organization. A higher mitigation ratio will be used if required by the Section 404 permit issued by the Corps of Engineers.

• No invasive plant species will be planted on the new ROW.

Dated: October 20, 2005

W. David Hall,

Vice President, Electric System Projects.

[FR Doc. 05–21696 Filed 10–31–05; 8:45 am]

BILLING CODE 8120–08–P

DEPARTMENT OF TRANSPORTATION

Federal Aviation Administration

Finding of No Significant Impact

AGENCY: Federal Aviation Administration (FAA), Department of Transportation (DOT).

ACTION: Environmental Finding Document: Finding of No Significant Impact; Notice.

SUMMARY: On May 23, 2005, the FAA Office of Commercial Space Transportation (AST) received an application for a launch license from Space Exploration Technologies, Inc. (SpaceX) to conduct launches of its Falcon 1 launch vehicle from Omelek Island, U.S. Army Kwajalein Atoll/Ronald Reagan Ballistic Missile Test Site (USAKA/RTS). The FAA participated as a cooperating agency with the U.S. Army Space and Missile Defense Command (USASMDC) in preparation of the Environmental Assessment (EA) for the Proof-of-Principle Space Launches from Omelek Island (February 2005). The EA analyzed the environmental consequences of conducting two proof-of-principle launches of the Falcon 1 Launch Vehicle from Omelek Island, USAKA/RTS. From its independent review and consideration, the FAA has determined that the FAA's proposed action is substantially the same as the actions already analyzed in the USASMDC EA and that FAA's comments and suggestions have been satisfied (see 1506.3(c) and FAA Order 1050.1E, 518h). The FAA formally adopts the EA and hereby incorporates the analysis to support its decision on this license application.

After reviewing and analyzing currently available data and information on existing conditions, project impacts, and measures to mitigate those impacts, the FAA has determined that licensing the proposed launch activities is not a Federal action that would significantly affect the quality of the human environment within the meaning of the National Environmental Policy Act (NEPA). Therefore, the preparation of an Environmental Impact Statement (EIS) is not required and the FAA is issuing a Finding of No Significant Impact (FONSI). The FAA made this determination in accordance with all applicable environmental laws.

FOR A COPY OF THE ENVIRONMENTAL ASSESSMENT OR THE FONSI CONTACT: A copy of the EA is available at: *http://www.smdcen.us/pubdocs/files/spacex_final_ea_ signed_fnsi_ 13dec04.pdf.* Questions or comments should be directed to Ms. Stacey Zee; FAA Environmental Specialist; Federal Aviation Administration; 800 Independence Ave., SW.; AST–100, Suite 331; Washington, DC 20591; (202) 267–9305.

Background

Launches of launch vehicles, such as SpaceX's proposed launches of the Falcon 1 launch vehicle from Omelek Island, must be licensed by the FAA pursuant to 49 U.S.C. Sections 70101–70121, the Commercial Space Launch Act. Licensing the launch of a launch vehicle is a Federal action requiring environmental analysis by the FAA in accordance with NEPA, 42 U.S.C. Sec. 4321 *et seq.* Upon receipt of a complete license application, the FAA must decide whether to issue a launch license to SpaceX for launching the Falcon 1 launch vehicle from Omelek Island, USAKA/RTS. An environmental determination is required for the evaluation of a license application. The FAA is using the analyses in the USASMDC EA as the basis for the environmental determination of the impacts to support licensing the Falcon launch vehicle from Omelek Island.

Proposed Action

SpaceX is proposing to launch the Falcon 1 launch vehicle from Omelek Island, USAKA/RTS. The Falcon is a small, unmanned, two-stage launch vehicle designed to put small payloads into orbit. It uses liquid oxygen (LO_X) and kerosene as propellants. The first stage, which is reusable, uses a parachute and would be recovered. The second stage is not reusable and is not intended to be recovered.

The issuance of a FONSI does not guarantee that a license will be issued by the FAA for the launch of the Falcon 1 launch vehicle. However, if a license is issued, SpaceX would be authorized to launch the Falcon 1 launch vehicle carrying a Razaksat Satellite built by ATSB. The Razaksat Satellite (formerly known as MACSAT) is an Earth observation spacecraft containing a medium aperture camera. It would be launched on a 90-degree azimuth to an orbit of 685 kilometers (426 miles).

The USASMDC EA considered four alternative site locations for the facilities to be constructed at Omelek Island. These alternatives are no longer under consideration because a final launch site has been selected. Under the No Action Alternative, the Falcon 1 launch vehicle would not be launched from Omelek Island.

Environmental Impacts

The following presents a brief summary of the environmental impacts considered in the USASMDC EA. The USASMDC EA is incorporated by reference in this FONSI and the FAA's FONSI is based upon the impacts discussed in that EA. Land Use, socioeconomics, environmental justice, and aesthetics were not discussed in the USASMDC EA. Based on the original analysis, it was determined that there would be no significant impacts to land use or aesthetics because Omelek Island would remain under U.S. Army management and would continue to be used for missile research. There would be no impacts to socioeconomics or environmental justice, because except for base personnel, the island is uninhabited. The project would only require a few existing base personnel and 20 SpaceX personnel and would not cause any impact to off base or low-income populations.

Air Quality: Falcon launches would have only a localized, minimal impact on air quality. Long-term effects are not expected because the launches would be infrequent and the resulting emissions would be rapidly dispersed and diluted by trade winds. Regional air quality and ambient air quality standards would not be impacted by launches of the Falcon 1 vehicle.

Airspace: USAKA/RTS is located under international airspace and therefore, has no formal airspace restrictions governing it. However, the Omelek launch site is approximately 35 kilometers (22 miles) north of Bucholz Army Airfield and Falcon launches

could potentially impact flight patterns for military aircraft in the area. SpaceX would coordinate Falcon 1 launches with the USAKA/RTS Commander, which would include scheduling launches to avoid airspace conflicts.

Biological Resources: Disturbances to vegetation and wildlife during Falcon launches would be minimal and brief. Based on existing analyses of prior and current launches within the region, launch disturbances on migratory birds, threatened or endangered species and other wildlife would be minimal. There is a very small possibility that debris or booster drops could impact migratory whales or sea turtles; however, the majority of the potential impact area is open-ocean, where the probability of impacting a species would be very low.

Potential habitat for sea turtles on Omelek includes sandy beaches along the southern and northern tips of the island and the area of the lagoon shoreline from the northern tip of the island south to the north jetty. Personnel would be instructed to avoid all contact with sea turtles or turtle nests that might occur within the area. On the day of the launch or the day before, SpaceX or USAKA/RTS personnel would fence the beach 100 meters (328 feet) on either side of the launch site just above the wave surge area at a sufficient height to prevent sea turtles from hauling out at this area and thus would prevent a take during a nominal launch. No site preparation activities would take place offshore, and thus marine mammals would not be affected.

No impacts are expected to vegetation since sufficient open space should exist around the launch site to absorb ground effects without directly impacting surrounding vegetation.

Cultural Resources: Personnel involved in launch and other operational activities would follow USAKA Environmental Standards (UES) requirements in handling or avoiding any cultural resources uncovered during operational or monitoring activities. This would include ongoing consultation with the Republic of the Marshall Islands Historic Preservation Officer on any cultural resource issues encountered during operations. In addition, no historic World War II or significant Cold War features have been identified on Omelek. Therefore, no significant impacts to cultural resources are anticipated.

Geology and Soils: Falcon 1 launch vehicle emissions would consist mainly of carbon monoxide, carbon dioxide, hydrogen and water and would not result in any impacts to geology or soils. There would be a slight risk of soil contamination from accidental spills of propellants or premature flight termination; however, this risk would be minimized because emergency response personnel would comply with the Hazardous Waste Management Plan and Hazardous Materials Contingency Plan prepared by SpaceX and the Kwajalein Environmental Emergency Plan.

Hazardous Materials and Waste: Materials proposed for use as a result of the Proposed Action are similar to hazardous materials already in use for other operations at USAKA/RTS. New hazardous materials would represent only a small increase in the total amount of materials handled and could easily be accommodated by existing hazardous materials management systems. Hazardous waste management at USAKA/RTS would continue to be performed in accordance with the UES, which requires shipment of hazardous waste back to the Continental United States for treatment and/or disposal; therefore, there would not be a significant impact.

Health and Safety: Launches of the Falcon 1 vehicle from Omelek Island would comply with all UES and USAKA/RTS Range Safety Requirements. This includes performing flight safety studies, coordinating launches with the Range Safety Officer and evacuating the uninvolved public from the launch hazard area prior to any launch. In addition, as part of their launch operator license application, SpaceX has developed a number of safety procedures for Falcon 1 launches.

Marshallese individuals who have permission to stay temporarily on Omelek while fishing from adjacent islands would be asked by the USAKA/RTS Commander to evacuate the launch hazard area once the Falcon 1 rocket has been brought to the island. The Marshallese could resume their habitation once launch activities have been accomplished and the associated facilities secured. Access to Omelek would be limited to all but mission essential persons and personnel would be evacuated from the island prior to launch. There is no expected significant impact to health and safety.

Infrastructure: The USASMDC EA found that there would be no impacts to infrastructure from constructing and operating the Falcon 1 launch program on Omelek Island. However, for this document, the FAA is analyzing only the licensing of Falcon launches and no construction or upgrades to roads or utilities would be required under the Proposed Action. Therefore, there would be no impacts to infrastructure from Falcon 1 launch operations at Omelek Island.

Noise: Falcon 1 pre-launch and launch operations on Omelek Island would result in only temporary noise impacts. The island has been developed solely as a launch support facility and there are no inhabited islands within 21 kilometers (13 miles) of the site. SpaceX personnel would be evacuated from the island prior to launch and would not be impacted by the launch. The Falcon 1 launch vehicle would reach supersonic speeds at an altitude of approximately eight kilometers (five miles) over the open ocean and the resultant sonic boom would not adversely impact any surrounding USAKA islands. Wildlife near the launch site would be temporarily impacted by noise generated during launch operations; however, the level of disturbance would be minimal due to the temporary and infrequent nature of launch operations.

Water Resources: There is the potential for carbonic acid (a mild acid similar to that in a carbonated beverage) to be produced during launch from the reaction of carbon dioxide in the exhaust plume and water. This carbonic acid would be expected to rapidly evaporate and would have a similar pH to that of rainwater; therefore, no impacts to water resources would be expected to occur from launch emissions.

There is the potential for an accidental propellant spill or premature flight termination to result in released propellant contaminating water resources. This risk, however, would be minimized through compliance with the Hazardous Materials Contingency Plan and Hazardous Waste Management Plan prepared by SpaceX and the Kwajalein Environmental Management Plan.

Cumulative Impacts: The proposed action would not occur at the same time as other programs such as Ground-Based Midcourse Defense or Minuteman III planned for the region. Launches are short-term, discrete events, thus allowing time between launches for emission products to be dispersed and minimizing the potential for impacts to airspace users, biological resources, and public health and safety. No significant cumulative impacts are expected to air quality, airspace, biological resources, cultural resources, geology and soils, hazardous materials and waste, health and safety, infrastructure, noise, and water resources.

Determination: An analysis of the Proposed Action has concluded that there are no significant short-term or long-term effects to the environment or surrounding populations. After careful and thorough consideration of the facts

herein, the undersigned finds that the proposed Federal action is consistent with existing national environmental policies and objectives set forth in Section 101(a) of NEPA and that it will not significantly affect the quality of the human environment or otherwise include any condition requiring consultation pursuant to Section 102(2)(c) of NEPA. Therefore, an EIS for the proposed action is not required.

Issued on October 25, 2005 in Washington, DC.

Patricia Grace Smith,

Associate Administrator for Commercial Space Transportation.

[FR Doc. 05–21746 Filed 10–31–05; 8:45 am]

BILLING CODE 4910–13–P

DEPARTMENT OF TRANSPORTATION

Federal Aviation Administration

[Docket No. FAA–2005–22842]

Notice of Opportunity To Participate, Criteria Requirements and Application Procedure for Participation in the Military Airport Program (MAP)

AGENCY: Federal Aviation Administration (FAA), Department of Transportation (DOT).

ACTION: Notice of criteria and application procedures for designation or redesignation, for the fiscal year 2006 MAP.

SUMMARY: This notice announces the criteria, application procedures, and schedule to be applied by the Secretary of Transportation in designating or redesignating, and funding capital development annually for up to 15 current (joint-use) or former military airports seeking designation or redesignation to participate in the Military Airport Program (MAP).

The MAP allows the Secretary to designate current (joint-use) or former military airports to receive grants from the Airport Improvement Program (AIP). The Secretary is authorized to designate an airport (other than an airport designated before August 24, 1994) only if:

(1) The airport is a former military installation closed or realigned under the Title 10 U.S.C. 2687 (announcement of closures of large Department of Defense installations after September 30, 1977), or under section 201 or 2905 of the Defense Authorization Amendments and Base Closure and Realignment Acts; or

(2) the airport is a military installation with both military and civil aircraft operations.

The Secretary shall consider for designation only those current or former military airports, at least partly converted to civilian airports as part of the national air transportation system, that will reduce delays at airports with more than 20,000 hours of annual delays in commercial passenger aircraft takeoffs and landings, or will enhance airport and air traffic control system capacity in metropolitan areas or reduce current and projected flight delays (49 U.S.C. 47118(c)).

DATES: Applications must be received on or before December 12, 2005.

ADDRESSES: Submit an original and two copies of *Standard Form (SF) 424,* ''Application for Federal Assistance,'' prescribed by the Office of Management and Budget Circular A–102, available at *http://www.faa.gov/arp/ace/forms/sf424.doc*, along with any supporting and justifying documentation. Applicant should specifically request to be considered for designation or redesignation to participate in the fiscal year 2006 MAP. Submission should be sent to the Regional FAA Airports Division or Airports District Office that serves the airport. Applicants may find the proper office on the FAA Web site *http://www.faa.gov/arp/regions.crm?nav=regions* or may contact the office below.

FOR FURTHER INFORMATION CONTACT: Mr. Ball (*Kendall.Ball@faa.gov.*), Airports financial Assistance Division (APP–500), Office of Airport Planning and Programming, Federal Aviation Administration (FAA), 800 Independence Avenue, SW., Washington, DC 20591, (202) 267–7436.

SUPPLEMENTARY INFORMATION:

General Description of the Program

The MAP provides capital development assistance to civil airport sponsors of designated current (joint-use) military airfields or former military airports that are included in the FAA's National Plan of Integrated Airport Systems (NPIAS). Airports designated to the MAP may obtain funds from a set-aside (currently four percent) of AIP discretionary funds for airport development, including certain projects not otherwise eligible for AIP assistance. These airports may also be eligible to receive grants from other categories of AIP funding.

Number of Airports

A maximum of 15 airports per fiscal year (FY) may participate in the MAP. There are 6 slots available for designation or redesignation in FY 2006. There are no general aviation slots available.

Term of Designation

The maximum term is five fiscal years following designation. The FAA can designate airports for a period of less than five years. The FAA will evaluate the conversion needs of the airport in its capital development plan to determine the appropriate length of designation.

Redesignation

Previously designated airports may apply for redesignation of an additional term not to exceed five years. Those airports must meet current eligibility requirements in 49 U.S.C. 47118 (a) at the beginning of each grant period and have MAP eligible projects. The FAA will evaluate applications for redesignation primarily in terms of warranted projects fundable only under the MAP as these candidates tend to have fewer conversion needs than new candidates. The FAA wants MAP airports to graduate to regular AIR participation.

Eligible Projects

In addition to eligible AIP projects, MAP can fund fuel farms, utility systems, surface automobile parking lots, hangars, and air cargo terminals up to 50,000 square feet. Designated or redesignated military airports can receive not more than $7,000,000 for each fiscal year after 2005 for projects to construct, improve, or repair terminal building facilities. Designated or redesignated military airports can receive not more than $7,000,000 for each fiscal year after 2005 for MAP eligible projects that include hangars, cargo facilities, fuel farms, automobile surface parking, and utility work.

Designation Considerations

In making designations of new candidate airports, the Secretary of Transportation may only designate an airport (other than an airport so designed before August 24, 1994) if it meets the following general requirements:

(1) The airport is a former military installation closed or realigned under:

(A) Section 2687 of Title 10;

(B) Section 201 of the Defense Authorization Amendments and Base Closure and Realignment Act (BRAC) (10 U.S.C. 2687 note); or

(C) Section 2905 of the Defense Base Closure and Realignment Act of 1990 (10 U.S.C. 2687 note); or

(2) The airport is a military installation with both military and civil aircraft operations; and

(3) The airport is classified as a commercial service or reliever airport in the NPIAS. (see 49 U.S.C. 47105(b)(2) and 47118(c)(1)) One of the designated

airports, if included in the NPIAS, may be a general aviation (GA) airport (public airport other than an air carrier airport, 14 CFR 152.3) that was a former military installation closed or realigned under BRAC, as amended, or 10 U.S.C. 2687. (See 49 U.S.C. 47118(g)). A general aviation airport must qualify under (1) above.

In designating new candidate airports, the Secretary shall consider if a grant would:

(1) reduce delays at an airport with more than 20,000 hours of annual delays in commercial passenger aircraft takeoffs and landings; or

(2) Enhance airport and air traffic control system capacity in a metropolitan area or reduce current and projected flight delays.

The application for new designations will be evaluated in terms of how the proposed projects would contribute to reducing delays and/or how the airport would enhance air traffic or airport system capacity and provide adequate user services.

Project Evaluation

Recently realigned or closed military airports, as well as active military airfields with new joint-use agreements, have the greatest need of funding to convert to, or to incorporate, civil airport operations. Newly converted airports and new joint-use locations frequently have minimal capital development resources and will therefore receive priority consideration for designation and MAP funding. The FAA will evaluate the need for eligible projects based upon information in the candidate airport's five-year Airport Capital Improvement Plan (ACIP). These projects need to be related to development of that airport and/or the air traffic control system.

1. The FAA will evaluate candidate airports and/or the airports such candidate airports would relieve based on the following specific factors:

- Compatibility of airport roles and the ability of the airport to provide an adequate airport facility;
- The capability of the candidate airport and its airside and landside complex to serve aircraft that otherwise must use the relieved airport;
- Landside surface access;
- Airport operational capability, including peak hour and annual capacities of the candidate airport;
- Potential of other metropolitan area airports to relieve the congested airport;
- Ability to satisfy, relieve, or meet air cargo demand within the metropolitan area;
- Forecasted aircraft and passenger levels, type of commercial service anticipate, i.e., scheduled or charter commercial service;
- Type and capacity of aircraft projected to serve the airport and level of operations at the relieved airport and the candidate airport;
- The potential for the candidate airport to be served by aircraft or users, including the airlines, serving the congested airport;
- Ability to replace an existing commercial service or reliever airport serving the area; and
- Any other documentation to support the FAA designation of the candidate airport.

2. The FAA will evaluate the development needs that, if funded, would make the airport a viable civil airport that will enhance system capacity or reduce delays.

Application Procedures and Required Documentation

Airport sponsors applying for designation or redesignation must complete and submit an SF 424, Application for Federal Assistance, and provide supporting documentation to the appropriate FAA Airports regional or district office serving that airport.

Standard Form 424

Sponsors may obtain this fillable form at *http://www.faa.gov/arp/ace/forms/sf424.doc.*

Applicants should fill this form out completely, including the following:

- Mark Item 1, Type of Submission as a ''pre-application'' and indicate it is for ''construction''.
- Mark item 8, Type of Application as ''new'', and in ''other'', fill in ''Military Airport Program''.
- Fill in Item 11, Descriptive Title of Applications Project. ''Designation (or redesignation) to the Military Airport Program''.
- In Item 15a, Estimated Funding, indicate the total amount of funding requested from the MAP during the entire term for which you are applying.

Supporting Documentation

(A) Identification as a Current or Former Military Airport. The application must identify the airport as either a current or former military airport and indicate whether it was:

(1) Closed or realigned under section 201 of the Defense Authorization Amendments and Base Closure and Realignment Act, and/or section 2905 of the Defense Base Closure and Realignment Act of 1990 (Installations Approved for Closure by the Defense Base Realignment and Closure Commissions), or

(2) Closed or realigned pursuant to 10 U.S.C. 2687 as excess property (bases announced for closure by Department of Defense (DOD) pursuant to this title after September 30, 1977 (this is the date of announcement for closure and not the date the property was deeded to the airport sponsor)), or

(3) A military installation with both military and civil aircraft operations. A general aviation airport applying for the MAP may be joint-use but must also qualify under (1) or (2) above.

(B) Qualifications for MAP:

Submit documents for (1) through (7) below:

(1) Documentation that the airport meets the definition of a ''public airport'' as defined in 49 U.S.C. 47102(16).

(2) Documentation indicating the required environmental review for civil reuse or joint-use of the military airfield has been completed. This environmental review need not include review of the individual projects to be funded by the MAP. Rather, the documentation should reflect that the environmental review necessary to convey the property, enter into a long-term lease, or finalize a joint-use agreement has been completed. The military department conveying or leasing the property, or entering into a joint-use agreement, has the lead responsibility for this environmental review. To meet AIP requirements the environmental review and approvals must indicate that the operator or owner of the airport has good title, satisfactory to the Secretary, or assures that good title will be acquired.

(3) For a former military airport, documentation that the eligible airport sponsor holds or will hold satisfactory title, a long-term lease in furtherance of conveyance of property for airport purposes, or a long-term interim lease for 25 years or longer to the property on which the civil airport is being located. Documentation that an application for surplus or BRAC airport property has been accepted by the Federal Government is sufficient to indicate the eligible airport sponsor holds or will hold satisfactory title or a long-term lease.

(4) For a current military airport, documentation that the airport sponsor has an existing joint-use agreement with the military department having jurisdiction over the airport. This is necessary so the FAA can legally issue grants to the sponsor. Here and in (3) directly above, the airport must possess the necessary property rights in order to accept a grant for its proposed projects during FY 2006.

(5) Documentation that the airport is classified as a ''commercial service airport'' or a ''reliever airport'' as

defined in 49 U.S.C. 47102(7) and 47102(18), unless the airport is applying for the general aviation slot.

(6) Documentation that the airport owner is an eligible airport ''sponsor'' as defined in 49 U.S.C. 47102(19).

(7) Documentation that the airport has an FAA approved airport layout plan (ALP) and a five-year airport capital improvement plan (ACIP) indicating all eligible grant projects proposed to be funded either from the MAP or other portions of the AIP.

(C) Evaluation Factors:

Submit information on the item below to assist in our evaluation:

(1) Information identifying the existing and potential levels of visual or instrument operations and aeronautical activity at the current or former military airport and, if applicable, the relieved airport. Also, if applicable, information on how the airport contributes to air traffic system or airport system capacity. If served by commercial air carriers, the revenue passenger and cargo levels should be provided.

(2) A description of the airport's projected civil role and development needs for transitioning from use as a military airfield to a civil airport. Include how development projects would serve to reduce delays at an airport with more than 20,000 hours of annual delays in commercial passenger aircraft takeoffs and landings; or enhance capacity in a metropolitan area or reduce current and projected flight delays.

(3) A description of the existing airspace capacity. Describe how anticipated new operations would affect the surrounding airspace and air traffic flow patterns in the metropolitan area in or near the airport. Include a discussion of whether operations at this airport create airspace conflicts that may cause congestion or whether air traffic works into the flow of other air traffic in the area.

(4) A description of the airport's five-year ACIP, including a discussion of major projects, their priorities, projected schedule for project accomplishment, and estimated costs. The ACIP must specifically identify the safety, capacity, and conversion related projects, associated costs, and projected five-year schedule of project construction, including those requested for consideration for MAP funding.

(5) A description of those projects that are consistent with the role of the airport and effectively contribute to the joint-use or conversion of the airfield to a civil airport. The projects can be related to various improvement categories depending on what is needed to convert from military to civil airport use, to meet required civil airport standards, and/or to provide capacity to the airport and/or airport system. The projects selected (*e.g.,* safety-related, conversion-related, and/or capacity-related), must be identified and fully explained based on the airport's planned use. Those projects that may be eligible under MAP, if needed for conversion or capacity-related purposes, must be clearly indicated, and include the following information:

Airside

- Modification of airport or military airfield for safety purposes, including airport pavement modifications (*e.g.,* widening), marking, lighting, strengthening, drainage or modifying other structures or features in the airport environs to meet civil standards for airport imaginary surfaces as described in *14 CFR part 77.*
- Construction of facilities or support facilities such as passenger terminal gates, aprons for passenger terminals, taxiways to new terminal facilities, aircraft parking, and cargo facilities to accommodate civil use.
- Modification of airport or military utilities (electrical distribution systems, communications lines, water, sewer, storm drainage) to meet civil standards. Also, modifications that allow utilities on the civil airport to operate independently, where other portions of the base are conveyed to entities other than the airport sponsor or retained by the Government.
- Purchase, rehabilitation, or modification of airport and airport support facilities and equipment, including snow removal, aircraft rescue, fire fighting buildings and equipment, airport security, lighting vaults, and reconfiguration or relocation of eligible buildings for more efficient civil airport operations.
- Modification of airport or military airfield fuel systems and fuel farms to accommodate civil aviation use.
- Acquisition of additional land for runway protection zones, other approach protection, or airport development.
- Cargo facility requirements.
- Modifications which will permit the airfield to accommodate general aviation users.

Landside

- Construction of surface parking areas and access roads to accommodate automobiles in the airport terminal and air cargo areas and provide an adequate level of access to the airport.
- Construction or relocation of access roads to provide efficient and convenient movement of vehicular traffic to, on, and from the airport, including access to passenger, air cargo, fixed base operations, and aircraft maintenance areas.

Modification or construction of facilities such as passenger terminals, surface automobile parking lots, hangars, air cargo terminal buildings, and access roads to cargo facilities to accommodate civil use.

(6) An evaluation of the ability of surface transportation facilities (road, rail, high-speed rail, maritime) to provide intermodal connections.

(7) A description of the type and level of aviation and community interest in the civil use of a current or former military airport.

(8) One copy of the FAA-approved ALP for each copy of the application. The ALP or supporting information should clearly show capacity and conversion related projects. Other information such as project costs, schedule, project justification, other maps and drawings showing the project locations, and any other supporting documentation that would make the application easier to understand should also be included. You may also provide photos, which would further describe the airport, projects, and otherwise clarify certain aspects of this application. These maps and ALPs should be cross-referenced with the project costs and project descriptions.

Redesignation of Airports Previously Designated and Applying for up to an Additional Five Years in the Program

Airports applying for redesignation to the Military Airport Program must submit the same information required by new candidate airports applying for a new designation. On the SF 424, Application for Federal Assistance, prescribed by the Office of Management and Budget Circular A–102, airports must indicate their application is for redesignation to the MAP. In addition to the above information, they must explain:

(1) Why a redesignation and additional MAP eligible project funding is needed to accomplish the conversion to meet the civil role of the airport and the preferred time period for redesignation not to exceed five years;

(2) Why funding of eligible work under other categories of AIP or other sources of funding would not accomplish the development needs of the airport; and

(3) Why, based on the previously funded MAP projects, the projects and/or funding level were insufficient to accomplish the airport conversion needs and development goals.

This notice is issued pursuant to Title 49 U.S.C. 47118.

Issued at Washington, DC on October 26, 2005.

Dennis E. Roberts,

Director, Office of Airport Planning and Programming.

[FR Doc. 05–21744 Filed 10–31–05; 8:45 am]

BILLING CODE 4910–13–M

DEPARTMENT OF TRANSPORTATION

Federal Highway Administration

Environmental Impact Statement: Miami-Dade County, Florida

AGENCY: Federal Highway Administration (FHWA), DOT.

ACTION: Notice of Intent.

SUMMARY: The FHWA is issuing this notice to advise the public that an Environmental Impact Statement (EIS) will be prepared for a proposed highway project in Miami-Dade County, Florida.

FOR FURTHER INFORMATION CONTACT: Mr. Gregory E. Williams, P.E., District Transportation Engineer, Federal Highway Administration, 545 John Knox Road, Suite 200, Tallahassee, Florida 32303. Telephone: (850) 942–9650 Ext. 3031.

SUPPLEMENTARY INFORMATION: The FHWA, in cooperation with the Florida Department of Transportation (FDOT, will prepare an EIS for a proposal to improve SR 997 (Krome Avenue) in Miami-Dade County, Florida. The proposed improvement would involve safety and capacity upgrades to SR 997 (Krome Avenue) from SW., 296th Street/Avocado Drive to SW 136th Street/Howard Street, a distance of approximately 10.07 miles. Improvements to the corridor are considered necessary to provide for safety improvements and projected future traffic demands. Alternatives under consideration include (1) taking no action; (20 widening the existing two-lane roadway to a divided two-lane roadway; (3) widening the existing two-lane roadway to a divided two-lane roadway with passing zones; and (4) widening the existing two-lane roadway to a four-lane divided roadway.

Letters describing the proposed action and soliciting comments will be sent to appropriate Federal, State, and local agencies, and to private organizations and citizens who have expressed interest in this project. A series of public meetings are being held in Miami-Dade County beginning in December 2004 and are expected to continue until approximately July 2007. In addition, a Public Hearing will be held. Public notice will be given of the time and location of project meetings and the hearing. The Draft EIS will be made available for public and agency review and comment. A formal kick-off meeting was held on January 20th, 2004.

To ensure that the full range of issues related to the proposed action is addressed and all significant issues identified, comments and suggestions are invited from all interested parties. Comment or questions concerning this proposed action and the EIS should be directed to the FHWA at the address provided above.

(Catalog of Federal Domestic Assistance Program Number 20.205, Highway Research, Planning, and Construction. The regulations implementing Executive Order 12372 regarding inter-governmental consultation on Federal programs and activities apply to this program.)

Issued on: October 13, 2005.

Gregory E. Williams,

District Transportation Engineer, Tallahassee, Florida.

[FR Doc. 05–21699 Filed 10–31–05; 8:45 am]

BILLING CODE 4910–22–M

DEPARTMENT OF TRANSPORTATION

Federal Transit Administration

Over-the-Road Bus Accessibility Program Announcement of Project Selections

AGENCY: Federal Transit Administration, DOT.

ACTION: Notice.

SUMMARY: The U.S. Department of Transportation (DOT) Federal Transit Administration (FTA) announces the selection of projects to be funded under Fiscal Year 2005 appropriations for the Over-the-Road Bus (OTRB) Accessibility Program, authorized by Section 3038 of the Transportation Equity Act for the 21st Century (TEA–21). The OTRB Accessibility Program makes funds available to private operators of over-the-road buses to help finance the incremental capital and training costs of complying with DOT's over-the-road bus accessibility rule, published in the **Federal Register** on September 24, 1998.

FOR FURTHER INFORMATION CONTACT: The appropriate FTA Regional Administrator for grant-specific issues; or Blenda Younger, Office of Program Management, (202) 366–2053, for general information about the OTRB Program.

SUPPLEMENTARY INFORMATION: A total of $6.9 million was made available for the program in FY 2005: $5.2 million for intercity fixed-route providers and $1.7 million for all other providers, such as commuter, charter, and tour operators. A total of 120 applicants requested $33.7 million: $19.5 million was requested by intercity fixed-route providers, and $14.2 million was requested by all other providers. Project selections were made on a discretionary basis, based on each applicant's responsiveness to statutory project selection criteria, fleet size, and level of funding received in previous years. Because of the high demand for the funds available, most applicants received less funding than they requested, but almost all qualified applicants received some funding. The selected projects will provide funding for the incremental cost of adding lifts to 72 new vehicles, retrofitting 122 vehicles, and $53,099 for training. Each of the following 93 awardees, as well as the 27 applicants who were not selected for funding, will receive a letter that explains how funding decisions were made.

AWARD AMOUNT

Operator	City/State	Intercity fixed-route	Other	Total
Region I				
Arrow Line	E. Hartford, CT		$35,932	$35,932
Bonanza Bus Lines	Providence, RI	$32,881		32,881
Concord Coach Lines, Inc.	Concord, NH	46,800		46,800
Dartmouth Transportation Co., Inc.	Concord, NH	23,900		23,900
DATTCO, Inc.	New Britain, CT	35,000		35,000
M&L Transit Systems, Inc.	Woburn, MA		35,000	35,000
Peter Pan Bus Lines	Springfield, MA	31,461		31,461
Plymouth & Brockton	Plymouth, MA	55,620		55,620

AWARD AMOUNT—Continued

Operator	City/State	Intercity fixed-route	Other	Total
Premier Coach Company, Inc.	Colchester, VT		26,980	26,980
Vermont Transit Co., Inc.	Burlington, VT	40,557		40,557
Region II				
Adirondack Trailways	Hurley, NY	33,500		33,500
Blue Bird Coach Lines	N. Tonawanda, NY	45,270		45,270
Hampton Jitney, Inc.	Southampton, NY	59,412		59,412
Lion Trailways	Rio Grande, NJ	88,673		88,673
Onondaga Coach Corp.	Auburn, NY		25,200	25,200
Star Transit Company, Inc.	Trenton, NJ		36,000	36,000
Sunrise Coach Lines, Inc.	Greenport, NY	70,924		70,924
Syracuse and Oswego Coach	E. Syracuse, NY		40,500	40,500
Utica Rome Bus Company	Clinton, NY		42,750	42,750
Region III				
Abbott Bus Lines, Inc.	Roanoke, VA		39,600	39,600
Bieber Tourways	Kutztown, PA	58,291		58,291
Buco Transportation/Campbell	Slippery Rock, PA		24,040	24,040
David Thomas Tours, Inc.	Philadelphia, PA		28,800	28,800
Dillon's Bus Service, Inc.	Millersville, MD	27,000		27,000
First Priority Tours, Inc.	District Hgts., MD		21,393	21,393
Fullington Trailways	Clearfield, PA	51,485		51,485
Gold Line, Inc.	Tuxedo, MD	82,000		82,000
Gunther Charters, Inc.	Hanover, MD		26,100	26,100
James River Bus Lines	Richmond, VA	27,000		27,000
Keller Transportation, Inc.	Waldorf, MD	78,101		78,101
Morgan's Bus Tours, Inc.	Upper Marlboro, MD		29,250	29,250
National Coach Works of Virginia	Tuxedo, MD	42,000		42,000
Trans-Bridge Lines	Bethlehem, PA	58,500		58,500
Region IV				
American Charters, LTD.	Charlotte, NC		24,000	24,000
American Coach of Atlanta, Inc.	Norcross, GA		22,500	22,500
American Coach Lines Jacksonville	Jacksonville, FLA		52,200	52,200
American Coach Lines Miami	Miami-Dade, FLA		32,625	32,625
Angelic Tours and Shuttles	Fayetteville, NC		40,000	40,000
Capitol City Transit Lines	Atlanta, GA		36,000	36,000
Coach Ride, LLC	Starkville, MS		25,200	25,200
Gentry Coach Company	Knoxville, TN		25,179	25,179
Holiday Tours, Inc.	Marietta, GA		27,816	27,816
Lancaster Tours Inc.	Lancaster, SC		40,000	40,000
Midnight Sun Tours, Inc.	Lake Worth, FLA		36,000	36,000
Royal Tours	Asheboro, NC		45,360	45,360
Southern Coach Company	Durham, NC		26,100	26,100
Region V				
Badger Coaches, Inc.	Madison, WI	117,495		117,495
Coach USA Indiana	Gary, IN	36,504		36,504
Excellent Adventures, Inc.	Ft. Wayne, IN		24,500	24,500
Indian Trails, Inc.	Owosso, MI		19,210	19,210
Lakefront Lines Inc.	Brook Park, OH	100,800		100,800
Lamers Bus Lines Inc.	Green Bay, WI	62,175		62,175
Philipps Bus Service, Inc.	Winona, MN		28,746	28,746
Pioneer Coach Lines, Inc.	Chicago, Il		26,854	26,854
Ready Bus Line	La Crescent, MN		30,275	30,275
River Trails Transit Lines, Inc.	Galena, IL		27,644	27,644
Southeastern Trailways	Indianapolis, IN		43,897	43,897
Southwest Coaches, Inc.	Marshall, MN		43,734	43,734
Southwestern Illinois Bus Co.	Chester, IL		27,000	27,000
St. Cloud Charter Service	St. Cloud, MN		20,089	20,089
The Free Enterprise System, Inc.	Jeffersonville, IN		25,645	25,645
Vandalia Bus Lines, Inc.	Caseyville, IL		27,000	27,000
Van Galder Bus Company	Janesville, WI	182,302		182,302
Wisconsin Coach Lines	Waukesha, WI	40,500		40,500
Region VI				
All Aboard America	Santa FE, NM		22,510	22,510
Americanos USA, LLC	Dallas, TX	162,228		162,228
AM Tour/Lone Star Coaches	Grand Prairie, TX		25,000	25,000
Cowtown Bus Charters, Inc.	Ft. Worth, TX	62,164		62,164
Crucero USA, LLC	Dallas, TX	81,114		81,114
El Expreso Bus Company, Inc.	Houston, TX	98,200		98,200
Fun Time Tours	Corpus Christi, TX		48,600	48,600
Greyhound Lines, Inc.	Dallas, TX	2,636,205		2,636,205
Gulf Coast Transportation	Houston, TX	68,310		68,310

AWARD AMOUNT—Continued

Operator	City/State	Intercity fixed-route	Other	Total
Hotard Motor Coaches, Inc.	New Orleans, LA		44,193	44,193
Kerrville Bus Co.	San Antonio, TX	194,400		194,400
Lone Star Trailways, Inc.	Tyler, TX		34,972	34,972
Oklahoma Trailways, Inc.	Tulsa, OK		36,000	36,000
Sierra Stage Coaches, Inc.	S. Houston, TX		25,200	25,200
Si Texas Tours	Bandera, TX		32,400	32,400
TNM&O	Lubbock, TX	40,557		40,557
Valley Transit	Harlingen, TX	40,557		40,557
Region VII				
Arrow Stage Lines	Omaha, NE		30,000	30,000
Burlington Trailways	W. Burlington, IA	86,798		86,798
Prestige Transportation Systems	Wichita, Kansas		34,920	34,920
Village Charters, Inc.	Wichita, Kansas		46,589	46,589
Region VIII				
No Awards				
Region IX				
K–T Contract Services	N. Las Vegas, NV	71,996		71,996
Roberts Hawaii	Honolulu, HI		25,200	25,200
Sierra Trailways of California	Sacramento, CA	43,149		43,149
Silverado Stages, Inc.	San Luis Obispo, CA	60,421		60,421
Triple J Tours, Inc.	Las Vegas, NV		37,791	37,791
Region X				
MTR Western	Seattle, WA		28,706	28,706
Northwestern Stage Lines	Spokane, WA	33,750		33,750
Premier Alaska Tours, Inc.	Anchorage, AK		25,200	25,200
Total		5,208,000	1,686,400	6,894,400

Eligible project costs may be incurred by awardees prior to final grant approval. The incremental capital cost for adding wheelchair lift equipment to any new vehicles delivered on or after June 9, 1998, the effective date of TEA–21, is eligible for funding under the OTRB Accessibility Program.

Applicants selected for funding may be contacted by FTA regional offices if additional information is needed before grants are made. The grant applications will be sent to the U.S. Department of Labor (DOL) for certification under labor protection requirements pursuant to 49 U.S.C. 5333(b). After referring applications to affected employees represented by a labor organization, DOL will issue a certification to FTA. Terms and conditions of the certification will be incorporated in the FTA grant agreement under the new guidelines replacing those in 29 CFR Part 215. Please see *Amendment to Section 5333(b), Guidelines to Carry Out New Programs Authorized by the Transportation Equity Act for the 21st Century (TEA–21)*; Final Rule (64 FR 40990, July 28, 1999).

Issued on: October 26, 2005.

Jennifer L. Dorn,

Administrator.

[FR Doc. 05–21722 Filed 10–31–05; 8:45 am]

BILLING CODE 4910–57–P

DEPARTMENT OF TRANSPORTATION

Maritime Administration

Reports, Forms and Recordkeeping Requirements; Agency Information Collection Activity under OMB Review

AGENCY: Maritime Administration, DOT.

ACTION: Notice and request for comments.

SUMMARY: In compliance with the Paperwork Reduction Act of 1995 (44 U.S.C. 3501 *et seq.*), this notice announces that the Information Collection abstracted below has been forwarded to the Office of Management and Budget (OMB) for review and approval. The nature of the information collection is described as well as its expected burden. The **Federal Register** notice with a 60-day comment period soliciting comments on the following collection of information was published on August 15, 2005, and comments were due by October 14, 2005. No comments were received.

DATES: Comments must be submitted on or before December 1, 2005.

FOR FURTHER INFORMATION CONTACT: Thomas Harrelson, Maritime Administration, 400 Seventh Street, Southwest, Washington, DC 20590; Telephone: (202) 366–4610; FAX: (202) 366–5522; or e-mail: *tom.harrelson@dot.gov.* Copies of this collection also can be obtained from that office.

SUPPLEMENTARY INFORMATION: Maritime Administration (MARAD).

Title: Monthly Report of Ocean Shipments Moving under Export-Import Bank Financing.

OMB Control Number: 2133–0013.

Type Of Request: Extension of currently approved collection.

Affected Public: Shippers subject to Export/Import Bank Financing.

Forms: MA–518.

Abstract: 46 App. U.S.C. 1241–1, Public Resolution 17, required MARAD to monitor and enforce the U.S.-flag shipping requirements relative to the loans/guarantees extended by the Export-Import Bank (EXIMBANK) to foreign borrowers. Public Resolution 17 requires that shipments financed by EXIMBANK and that move by sea, must be transported exclusively on U.S.-flag registered vessels unless a waiver is obtained from MARAD.

Annual Estimated Burden Hours: 168 hours.

ADDRESSES: Send comments to the Office of Information and Regulatory Affairs, Office of Management and Budget, 725 17th Street, Northwest, Washington, DC 20503, Attention MARAD Desk Officer.

Comments are invited on: Whether the proposed collection of information is necessary for the proper performance of the functions of the agency, including

whether the information will have practical utility; the accuracy of the agency's estimate of the burden of the proposed information collection; ways to enhance the quality, utility and clarity of the information to be collected; and ways to minimize the burden of the collection of information on respondents, including the use of automated collection techniques or other forms of information technology. A comment to OMB is best assured of having its full effect if OMB receives it within 30 days of publication.

Authority: 49 CFR 1.66.

Issued in Washington, DC on October 24, 2005.

Joel C. Richard,

Secretary, Maritime Administration.

[FR Doc. 05–21733 Filed 10–31–05; 8:45 am]

BILLING CODE 4910–81–P

DEPARTMENT OF TRANSPORTATION

Maritime Administration

Reports, Forms and Recordkeeping Requirements; Agency Information Collection Activity under OMB Review

AGENCY: Maritime Administration, DOT.

ACTION: Notice and request for comments.

SUMMARY: In compliance with the Paperwork Reduction Act of 1995 (44 U.S.C. 3501 et seq.), this notice announces that the Information Collection abstracted below has been forwarded to the Office of Management and Budget (OMB) for review and approval. The nature of the information collection is described as well as its expected burden. The **Federal Register** Notice with a 60-day comment period soliciting comments on the following collection of information was published on August 16, 2005, and comments were due by October 17, 2005. No comments were received.

DATES: Comments must be submitted on or before December 1, 2005.

FOR FURTHER INFORMATION CONTACT: Richard Walker, Maritime Administration, 400 Seventh Street Southwest, Washington, DC 20590; Telephone: 202–366–5076, FAX: 202–366–6988, or e-mail: *Richard.walker@dot.gov*. Copies of this collection also can be obtained from that office.

SUPPLEMENTARY INFORMATION: Maritime Administration (MARAD).

Title: Inventory of American Intermodal Equipment.

OMB Control Number: 2133–0503.

Type of Request: Extension of currently approved collection.

Affected Public: Owners of U.S. steamship and intermodal equipment leasing companies.

Forms: None.

Abstract: This collection consists of an intermodal equipment inventory that provides data essential to both the government and the transportation industry in planning for the most efficient use of intermodal equipment. Further, this collection is intended to assure that containers and related intermodal equipment are obtainable in the event of a national emergency.

Annual Estimated Burden Hours: 66 hours.

ADDRESSES: Send comments to the Office of Information and Regulatory Affairs, Office of Management and Budget, 725 17th Street Northwest, Washington, DC 20503, Attention MARAD Desk Officer.

Comments are invited on: Whether the proposed collection of information is necessary for the proper performance of the functions of the agency, including whether the information will have practical utility; the accuracy of the agency's estimate of the burden of the proposed information collection; ways to enhance the quality, utility and clarity of the information to be collected; and ways to minimize the burden of the collection of information on respondents, including the use of automated collection techniques or other forms of information technology. A comment to OMB is best assured of having its full effect if OMB receives it within 30 days of publication.

Authority: 49 CFR 1.66.

Issued in Washington, DC on October 24, 2005.

Joel C. Richard,

Secretary, Maritime Administration.

[FR Doc. 05–21734 Filed 10–31–05; 8:45 am]

BILLING CODE 4910–81–P

DEPARTMENT OF TRANSPORTATION

National Highway Traffic Safety Administration

[Docket No. NHTSA–2005–20858; Notice 4]

DOT Chemical, Denial of Appeal of Decision on Inconsequential Noncompliance

DOT Chemical has appealed a decision by the National Highway Traffic Safety Administration (NHTSA) that denied its petition for a determination that its noncompliance with Federal Motor Vehicle Safety Standard (FMVSS) No. 116, ''Motor vehicle brake fluids,'' is inconsequential to motor vehicle safety. DOT Chemical had applied to be exempted from the notification and remedy requirements of 49 U.S.C. Chapter 301, ''Motor Vehicle Safety.''

Notice of receipt of the original petition was published on April 14, 2005, in the **Federal Register** (70 FR 19837). On July 18, 2005, NHTSA published a notice in the **Federal Register** denying DOT Chemical's petition (70 FR 41254), stating that the petitioner had not met its burden of persuasion that the noncompliance is inconsequential to motor vehicle safety. DOT Chemical appealed, and notice of the appeal was published in the **Federal Register** on September 2, 2005 (70 FR 52469). NHTSA received no public comments.

Affected are a total of approximately 50,000 containers of DOT 4 brake fluid, lot numbers KMF02 and KMF03, manufactured in June 2004. FMVSS No. 116 requires that, when tested as referenced in S5.1.7 ''Fluidity and appearance at low temperature,'' S5.1.9 ''Water tolerance,'' and S5.1.10 ''Compatibility,'' the brake fluid shall show no crystallization or sedimentation. The subject brake fluid shows crystallization and sedimentation when tested as referenced in S5.1.7 at −40°F and −58°F, sedimentation when tested as referenced in S5.1.9 at −40°F, and crystallization when tested as referenced in S5.1.10 at −40°F.

DOT Chemical believes that the noncompliance is inconsequential to motor vehicle safety and that no corrective action is warranted. DOT Chemical stated that there are fiber-like crystals in the fluid, which are borate salts, and

> are a natural part (no contamination) of DOT 4 brake fluid production (just fallen out of solution in some packaged goods) and have not demonstrated any flow restrictions even at extended periods of low temperatures at minus 40° F. Furthermore, when the fluid is subjected to temperatures in a normal braking system, the crystals go back into solution in some cases not to reappear at all at ambient temperatures.

NHTSA reviewed the petition and determined that the noncompliance is not inconsequential to motor vehicle safety. In its denial, NHTSA noted that it granted petitions for determinations of inconsequential noncompliance of FMVSS No. 116 to Dow Corning Corporation (59 FR 52582, October 18, 1994) and to First Brands Corporation (59 FR 62776, December 6, 1994). In the case of Dow, the FMVSS No. 116 noncompliance arose from a ''slush-like crystallization'' that dispersed ''under slight agitation or warming.'' NHTSA accepted Dow's argument that its ''slush-like crystallization'' does not

consist of ''crystals that are either water-based ice, abrasive, or have the potential to clog brake system components.'' NHTSA concurred with Dow's conclusion that ''the crystallization that occurred ought not to have an adverse effect upon braking.'' In the case of First Brands, the FMVSS No. 116 noncompliance arose from a ''soft non-abrasive gel'' that also dispersed under slight agitation or warming.

NHTSA determined that facts leading to the grants of the inconsequential noncompliance petitions of Dow and First Brands are not analogous to the facts in DOT Chemical's situation. In contrast, DOT Chemical's noncompliance results from ''fiber-like crystals'' made of borate salts. These borate salt crystals did not disperse under slight agitation or warming, but had to be physically removed by filtration.

In its denial of DOT Chemical's petition NHTSA stated that the thread-like nature of this type of crystallization has the potential to clog brake system components, particularly in severe cold operation conditions. Impurities such as these in the brake system may cause the system to fail, *i.e.*, to lose the ability to stop the vehicle over time due to the accumulation of compressible material in the brake lines. These impurities may also result in the failure of individual brake system components due to the corrosive nature of the contaminants themselves.

In consideration of the foregoing, NHTSA decided that the petitioner did not meet its burden of persuasion that the noncompliance it described is inconsequential to motor vehicle safety. Accordingly, its petition was denied.

In its appeal of NHTSA's denial, DOT Chemical stated that ''[t]he words and phrases used in the [original] petition were not identical to the descriptions in the previous cases. DOT Chemical wishes to clear up any misunderstandings from the original petition and reword to match the precedent cases.''

DOT Chemical provided the following statements in its appeal:

- Our choice of the word ''crystals'' can also be described as ''slush-like crystallization'' (as in the granted petition in 1994) or a ''soft non-abrasive gel,'' a look at the sample is worth a thousand words or even rubbing the material between the fingers.
- Our ''crystals'' dispersed and/or went completely into solution ''under slight agitation or warming'' (as in the granted petition in 1994).
- Slight Agitation: In DOT Chemical's petition the phrase ''DOT Chemical tested the fluid, agitated the material before testing to insure that the crystals were part of each test'' we believe implied that the material went into solution when agitated. We simply needed to make sure that the test material was not just decanted brake fluid without ''crystals.'' When agitated, ''crystals'' or ''slush-like crystallization'' was not seen.
- Warming: In DOT Chemical's petition the phrase ''when the fluid is subjected to temperatures in a normal braking system, the crystals go back into solution in some cases not to reappear at all at ambient temperatures'' we believe implied the warming scenario mentioned in the granted petition cases.
- In the case of the granted petitions stating that ''its 'slush-like crystallization' does not consist of 'crystals that are either water-based ice, abrasive, or have the potential to clog brake system components' '' we believe implies the same thing as our statements ''There is no contamination in this fluid'' and ''the crystals are a natural part (no contamination).''
- In the case of the granted petitions stating that ''the crystallization that occurred ought not to have an adverse effect upon braking'' we believe is carried to an additional degree by DOT Chemical's testing of the material at $-40°$ F through the viscometer (with dimensions and drawing provided) and stating that the diameter is much smaller than brake system lines. Specific phrases in DOT Chemical's appeal are ''The crystals presented no problems with obstruction,'' ''results again showed no obstruction,'' and ''have not demonstrated any flow restrictions even at extended periods of low temperatures at minus 40° F.'' Much time was spent on the flow and low temperatures because all tests passed except partial test failures concerning sedimentation and low temperatures.

After considering the statements presented by DOT chemical in its appeal, NHTSA has decided to deny the appeal. As NHTSA stated in denying DOT Chemical's original petition, DOT Chemical's noncompliance results from ''fiber-like crystals'' made of borate salts which did not disperse under slight agitation or warming. DOT Chemical's statement in its appeal that, ''when the fluid is subjected to temperatures in a normal braking system, the crystals go back into solution *in some cases*'' (emphasis added), distinguishes it from petitions NHTSA has granted, where the crystallization consistently dispersed. DOT Chemical in its appeal provided no data indicating that the crystals *always go back into solution* at ambient temperature, including at a test laboratory ambient temperature of 75° F (24° C). Further, DOT Chemical provided no data to validate its assertion that the borate salts will not cause any safety problems such as the potential to clog brake system components.

In consideration of the foregoing, NHTSA has decided that the petitioner has not met its burden of persuasion that the noncompliance described is inconsequential to motor vehicle safety. Accordingly, DOT Chemical's appeal of NHTSA's decision on inconsequential noncompliance is hereby denied.

Authority: 49 U.S.C. 30118, 30120; delegations of authority at CFR 1.50 and 501.8.

Issued on: October 26, 2005.

Ronald L. Medford,

Senior Associate Administrator for Vehicle Safety.

[FR Doc. 05–21723 Filed 10–31–05; 8:45 am]

BILLING CODE 4910–59–P

DEPARTMENT OF TRANSPORTATION

National Highway Traffic Safety Administration

[Docket No. NHTSA–2005–21859; Notice 3]

Toyota Motor North America, Inc., Notice of Appeal of Denial of Petition for Decision of Inconsequential Noncompliance

Toyota Motor North America (Toyota) has appealed a decision by the National Highway Traffic Safety Administration that denied its petition for a determination that its noncompliance with Federal Motor Vehicle Safety Standard (FMVSS) No. 225, ''Child restraint anchorage systems,'' is inconsequential to motor vehicle safety.

Notice of receipt of the petition for inconsequential noncompliance was published on July 19, 2005, in the **Federal Register** (70 FR 41476). On September 26, 2005, NHTSA published a notice in the **Federal Register** denying Toyota's petition (70 FR 56207), stating that the petitioner had not met its burden of persuasion that the noncompliance is inconsequential to motor vehicle safety.

This notice of receipt of Toyota's appeal is published in accordance with NHTSA's regulations (49 CFR 556.7 and 556.8) and does not represent any agency decision or other exercise of judgment concerning the merits of the appeal.

Affected are a total of approximately 156,555 model year 2003 to 2005 Toyota Tundra access cab vehicles produced between September 1, 2002 and April 22, 2005. S5(c)(2) of FMVSS No. 225 requires each vehicle that:

> (i) Has a rear designated seating position and meets the conditions in S4.5.4.1(b) of Standard No. 208 * * * and, (ii) Has an air bag on-off switch meeting the requirements of S4.5.4 of Standard 208 * * * shall have a child restraint anchorage system for a designated passenger seating position in the front seat, instead of a child restraint anchorage system that is required for the rear seat * * *.

The subject vehicles do not have a child restraint lower anchorage in the front seat as required by S5(c)(2).

In its original petition, Toyota asserted that the noncompliance is inconsequential to motor vehicle safety and that no corrective action is warranted. Toyota stated that it considered whether rear-facing child restraints could be used in the noncompliant vehicles, and ''is unaware of any rear-facing child restraints that require lower anchorages in the vehicle.'' Toyota further stated,

> Most, if not all rear facing child restraints (even those with lower anchorage systems), have belt paths which allow the child restraint to be secured properly in the front passenger seat of the subject vehicles utilizing the front passenger seatbelt. We also note that child restraint manufacturers provide instructions with their child seats (even lower anchorage equipped child seats) on how to install their restraint with the seatbelt. In addition, all Toyota Tundra vehicles provide instructions on how to install child restraints with the seatbelt.

NHTSA reviewed the petition and determined that the noncompliance is not inconsequential to motor vehicle safety. In its denial, NHTSA noted that the absence of LATCH anchorages compromises the overall level of safety of child restraints. FMVSS No. 225 requires a simple, uniform system for installing child restraints that increases the likelihood of proper installation. Prior to FMVSS No. 225, many child restraints were improperly installed, increasing the safety risk to children riding in the improperly installed child restraints. Therefore, NHTSA stated that it is reasonable to conclude that noncompliant vehicles do not offer the same level of safety as compliant vehicles because of the increased risk of improper child restraint installation.

In its original petition, Toyota further pointed out that model year 2000 to 2002 Tundra access cab vehicles have a front passenger airbag on-off switch as standard equipment but not lower anchorage system because they were produced prior to the effective date of the FMVSS No. 225 lower anchorage requirement with which the subject vehicles noncomply. Toyota asserted that,

> considering child restraint installation in the front passenger seat, the 2003–2005 MY vehicles (subject vehicles) are no different than the 2000–02 MY vehicles and further, it follows that the subject vehicles are no less safe than the 2000–02 MY vehicles.

In its denial, NHTSA made the point that the noncompliant vehicles offer a lower level of child passenger safety than those which comply with the requirements of FMVSS No. 225, which is why the standard was promulgated.

Toyota further stated,

> [We] also considered whether a lower anchorage child restraint can be mistakenly installed in the front passenger seat attempting to utilize the lower anchorage. Upon investigating the seat bight of the subject vehicles, we believe a current vehicle owner or subsequent owner could easily observe that no lower anchorage bars exist. We would also note that there are no portions of the seat frame within the seat bight of the front passenger seat that may be mistaken for lower anchorage bars.

NHTSA determined that this argument by Toyota is beside the point in terms of consequentiality to safety. Additionally, through NHTSA's child passenger safety working group, many examples of misuse have been presented. Parents who mistakenly believe their vehicles had LATCH (pre-2002 vehicles) had used seatbelt latch plates, drilled holes through the nylon webbing of the seatbelt or seatbelt buckle stalk, and attached seats to the seat support structure or other places within the vehicle that could be hooked to, all in attempts to secure the child restraint using the LATCH system. NHTSA pointed out that in this particular case, the owner's manual for the Toyota Tundra provides instruction for installing a child restraint using the LATCH system, even though one is not available. A parent might take an improper action, as described previously, in an attempt to ''find'' the LATCH system or ''create'' a LATCH system, resulting in the improper installation of the child restraint. Therefore, NHTSA determined that the lack of the required LATCH system is consequential to safety.

Finally, Toyota noted that it had not received customer complaints regarding the absence of a front passenger seat child restraint lower anchorage system, nor had it received any reports of a crash, injury or fatality due to this noncompliance. NHTSA noted that it does not consider the absence of these reports to be compelling evidence of the inconsequentiality of this noncompliance to safety.

In consideration of the foregoing, NHTSA decided that Toyota did not meet its burden of persuasion that the noncompliance it described is inconsequential to motor vehicle safety. Accordingly, its petition was denied.

In its appeal from NHTSA's denial, Toyota states that the subject vehicles ''have 3 rear designated seating positions with *two rear seat child restraint lower anchorage* systems [emphasis original], and a manual air bag on-off switch to disable the front passenger air bag, but no child restraint lower anchorage system in the front passenger seat.''

Toyota further states:

> Based on [NHTSA's statements in its petition denial], Toyota believes the agency may have misunderstood the situation regarding the subject vehicles. The subject vehicles have two LATCH positions in the rear seats. The owner's manuals for these vehicles are correct, since it [sic] provides instructions for installing child restraints using LATCH in the rear seats, and provides instructions for installing child restraints for the front passenger seats using the seat belt.
>
> The issue in question is the airbag cut-off switch installed pursuant to FMVSS 208 S4.5.4. FMVSS 225 requires that if this airbag cut-off switch is installed a LATCH position must be provided in the front passenger seat, in lieu of one of the rear LATCH positions. As stated previously, the subject vehicles do not have a LATCH in the front passenger seat, but has [sic] two rear LATCH positions. Thus, the difference between the subject vehicles and competitive models with two LATCH positions in the rear seats and no LATCH in the front passenger seat is that the subject vehicles have airbag cut-off switch allowed under FMVSS 208 S4.5.4, while the competitor models do not have this switch.
>
> In the **Federal Register** notice, based on the type of reasoning used by the agency, the agency seemed to imply that the non-compliance remedy to this situation is the installation of a LATCH position to the front passenger seat. However, we believe the agency should understand that the likely remedy is to remove the airbag cut-off switches. Further, Toyota has not received any customer complaints regarding the airbag cut-off switch, and Toyota believes that the vehicle owners of the subject vehicles consider them a useful feature.
>
> In conclusion, since the subject vehicles have two LATCH systems in the rear seats, the vehicles comply with the intent of the standard and the vehicles are no less safe than vehicles which comply with the requirements of FMVSS 225 without a cut-off switch.

Interested persons are invited to submit written data, views, and arguments on the petition appeal described above. Comments must refer to the docket and notice number cited at the beginning of this notice and be submitted by any of the following methods. *Mail:* Docket Management Facility, U.S. Department of Transportation, Nassif Building, Room PL–401, 400 Seventh Street, SW., Washington, DC, 20590–0001. Hand Delivery: Room PL–401 on the plaza level of the Nassif Building, 400 Seventh Street, SW., Washington, DC. It is requested, but not required, that two copies of the comments be provided. The Docket Section is open on weekdays from 10 a.m. to 5 p.m. except Federal Holidays. Comments may be submitted electronically by logging onto the Docket Management System Web site at *http://dms.dot.gov.* Click on ''Help'' to obtain instructions for filing the document electronically. Comments

may be faxed to 1–202–493–2251, or may be submitted to the Federal eRulemaking Portal: go to *http://www.regulations.gov.* Follow the online instructions for submitting comments.

The petition appeal, supporting materials, and all comments received before the close of business on the closing date indicated below will be filed and will be considered. All comments and supporting materials received after the closing date will also be filed and will be considered to the extent possible. When the petition appeal is granted or denied, notice of the decision will be published in the **Federal Register** pursuant to the authority indicated below.

Comment closing date: December 1, 2005.

Authority: (49 U.S.C. 30118, 30120: delegations of authority at CFR 1.50 and 501.8)

Issued on: October 26, 2005.

Ronald L. Medford,

Senior Associate Administrator for Vehicle Safety.

[FR Doc. 05–21724 Filed 10–31–05; 8:45 am]

BILLING CODE 4910–59–P

DEPARTMENT OF TRANSPORTATION

National Highway Traffic Safety Administration

[Docket No. NHTSA 03–15651]

Federal Motor Vehicle Safety Standards; Replacement Lamps, Reflective Devices, and Associated Equipment

AGENCY: National Highway Traffic Safety Administration (NHTSA), Department of Transportation (DOT).

ACTION: Notice of interpretation and termination of rulemaking.

SUMMARY: This document provides an interpretation concerning how our standard for lamps, reflective devices, and associated equipment applies to replacement equipment. It represents the continuation of a process that began with the publication of a notice of draft interpretation in July 2003, and included the publication of a notice of interpretation in October 2004. We are providing this interpretation in response to requests that we reconsider the October 2004 notice of interpretation on this subject in several areas. This document also announces termination of a rulemaking announced in that notice of interpretation.

FOR FURTHER INFORMATION CONTACT: Edward Glancy, Office of Chief Counsel, National Highway Traffic Safety Administration, 400 Seventh Street, SW., Washington, DC 20590. Telephone: (202) 366–2992. Fax: (202) 366–3820.

SUPPLEMENTARY INFORMATION:

Background

FMVSS No. 108 specifies requirements for original and replacement lamps, reflective devices, and associated equipment. The standard applies to passenger cars, multipurpose passenger vehicles, trucks, buses, trailers, and motorcycles. Under the standard, vehicle manufacturers are required to certify that a new vehicle meets, among other things, FMVSS No. 108's requirements with respect to lamps, reflective devices, and associated equipment. In addition, FMVSS No. 108 also applies to lamps, reflective devices, and associated equipment manufactured to replace any lamp, reflective device, or item of associated equipment on any vehicle to which the standard applies. Thus, FMVSS No. 108 is both a vehicle standard and an equipment standard.

The purpose of FMVSS No. 108 is to reduce crashes and deaths and injuries from crashes, by providing adequate illumination of the roadway, and by enhancing the conspicuity of motor vehicles on the public roads so that their presence is perceived and their signals understood, both in daylight and in darkness or other conditions of reduced visibility. The agency has addressed the safety need for the various requirements included in FMVSS No. 108 in many rulemakings over the years.

October 2004 Notice of Interpretation

On October 8, 2004, NHTSA published in the **Federal Register** (69 FR 60462) a notice of interpretation concerning how Federal Motor Vehicle Safety Standard (FMVSS) No. 108, *Lamps, Reflective Devices, and Associated Equipment,* applies to replacement equipment. The interpretation addressed requests for interpretation in two letters submitted by Calcoast-ITL (Calcoast), a testing company. Our notice of interpretation reflected consideration of public comments on a July 2003 notice of draft interpretation.[1]

Requests for interpretation. The first Calcoast letter asked whether replacement lamps are required to have all the functions of original lamps. The letter also asked whether replacement lamps for the rear of a vehicle may have the rear reflex reflectors in a location that is inboard from that in the original lamps. The second Calcoast letter asked a series of questions regarding whether it is permissible for replacement lamps to use alternative light sources, *i.e.*, those that are different from those specified by the original equipment (OE) manufacturer.

Primary interpretation. In responding to the issues raised by Calcoast, our interpretation focused primarily on the meaning of the following language, set forth in paragraph S5.8.1 of the standard:

> Except as provided below, each lamp, reflective device, or item of associated equipment manufactured to replace any lamp, reflective device, or item of associated equipment on any vehicle to which this standard applies shall be designed to conform to this standard.

We said that this language applies to individual replacement lamps or other items of replacement equipment, not sets of lamps or equipment. We concluded therefore that compliance of each individual replacement lamp or other item of replacement equipment is determined based solely on the properties and characteristics of the individual lamp or combination lamp, without consideration of other lamps that may be included as part of a set. That is, in the case of a replacement lamp designed or recommended for a particular vehicle and sold as part of a set of two lamps, the lamp would not comply with FMVSS No. 108 if, when installed on one side of the vehicle, it would take the vehicle out of compliance with the standard.

Retention of required functions. We concluded that replacement lamps are required to have all the functions of the original lamps.

Location of required functions. Given that FMVSS No. 108 requires that reflex reflectors be located ''as far apart as practicable,'' we concluded that replacement lamps that have the effect of moving the reflex reflectors closer together would clearly not be ''as far apart as practicable,'' and therefore would not conform to the standard.

Use of alternative light sources. On the issue of use of alternative light sources for replacement lighting equipment, we concluded that replacement lighting (other than replacement headlamps) may utilize a different type of light source than that of the original equipment lighting, provided that the replacement lighting equipment meets the requirements of the standard for that type of lamp and does not take the vehicle out of compliance.

With respect to replacement headlamps, however, we stated that we were adhering to a March 13, 2003 letter of interpretation to Mr. Galen Chen. That letter stated that headlamps

[1] 68 FR 42454; July 17, 2003.

manufactured to replace OE headlamps must comply with all applicable photometry requirements using the replaceable light sources intended for use in the headlighting system on the vehicle for which the replacement headlamp is intended. We stated that, unlike other lamps, FMVSS No. 108 specifically regulates headlamp systems, including their light sources.

Determination of compliance of paired replacement lamps. In our October 2004 notice of interpretation, we noted that the agency had adopted the existing language of S5.8.1 at a time when replacement lighting equipment was very similar to original equipment and expected to remain so, *i.e.*, the purpose of replacement equipment was to replace broken or worn-out equipment. Now, however, a market has developed where manufacturers produce ''restyled'' lamps, *e.g.*, with redesigned and sometimes relocated functions, to enable consumers to customize the appearance of their vehicles.

We explained that, after considering the comments on our draft interpretation, we had tentatively concluded that the existing requirement (as interpreted in the October 2004 notice) was unnecessarily design-restrictive in some situations. We stated in that notice that we believed it would be appropriate to consider the compliance of pairs of replacement lamps in certain circumstances, and announced that we planned to conduct rulemaking during 2005 that would propose to amend FMVSS No. 108 to that effect. We also stated that we would not enforce the standard in certain specific situations involving pairs of lamps pending completion of the rulemaking.

Large vehicles. We stated that our interpretation of S5.8.1 applied to all covered vehicles, regardless of size. We noted further that a manufacturer of aftermarket lighting equipment could not design or recommend lighting equipment for a specific vehicle if installation of the equipment (assuming that it was done correctly) on a vehicle took that vehicle out of compliance with FMVSS No. 108.

Requests for Reconsideration

After we published the October 2004 notice of interpretation, we received two requests for reconsideration. We note that while one of the requests was styled as a ''petition for reconsideration,'' a request that we reconsider an interpretation does not qualify as a petition under any of our regulations. Therefore, we are responding to both requests as letters requesting that we reconsider an interpretation. Given that the interpretation in question was published as a notice of interpretation, and since we are changing our interpretation in several respects, we decided to publish this document as a notice of interpretation as well.

The Motor and Equipment Manufacturers Association (MEMA), the Motor Vehicle Lighting Council (MVLC) and the Transportation Safety Equipment Institute (TSEI) jointly submitted one request for reconsideration. (We will hereafter refer to these organizations as MEMA *et al.*) The Specialty Equipment Market Association (SEMA) submitted the other request. In addition, we received a request for clarification/interpretation from the National Truck Equipment Association (NTEA).

Subsequently, we received a letter from the Alliance of Automobile Manufacturers (Alliance) concerning the requests for reconsideration. The Alliance stated that while it agrees with parts of our interpretation, it believes that the organizations requesting reconsideration have raised good points with respect to the decision to reaffirm the March 13, 2003 interpretation to Mr. Galen Chen relating to the necessity for using in replacement headlamps light sources intended for use in the headlighting system on the vehicle for which the replacement headlamp is intended, and asked us to reconsider that aspect of the interpretation.

The organizations requesting reconsideration disagreed with our interpretation of S5.8.1 with respect to a number of issues. They raised issues relating both to the existing language of the standard and to what they believe the standard should and should not require in this area. MEMA *et al.* and SEMA asked that we withdraw our interpretation.

Language of S5.8.1. One argument raised by the organizations was that the interpretation goes beyond the words of S5.8.1. MEMA *et al.* stated that wording of that section is simply that lamps replacing original lighting equipment on vehicles ''shall be designed to conform'' to FMVSS No. 108, and that the agency had essentially derived a new requirement, without benefit of rulemaking, from this subsection. They stated that the practical effect of the interpretation is a requirement that all replacement lamps utilize (for required functions): (1) The same original headlamp light source; (2) the same functions; (3) the same function colors; and (4) the same location.

MEMA *et al.* argued that the interpretation departs from more than 30 years of the shared NHTSA and industry view of replacement lamp compliance. Those organizations stated that they believe that prior to the October 2004 interpretation, FMVSS No. 108 required that replacement headlamps be designed to meet the photometric and environmental performance requirements without any restrictions on the choice of design light source, except that replaceable bulb headlamps must use Part 564 light sources and any necessary ballasts. They stated that no restriction or control of light sources is stated in the current FMVSS No.108 other than for bulbs (light sources) for replaceable bulb headlamps.

Statutory requirements. SEMA argued that the agency engaged in a rulemaking when it published a request for public comments on a draft interpretation and then issued a final notice of interpretation, but without following the procedures specified in the Administrative Procedures Act.

The organizations also raised issues related to the requirements of the Vehicle Safety Act. MEMA *et al.* stated that, under the interpretation, the standard is design-based and conflicts with the agency's charter to establish performance-based standards based upon safety benefits.

SEMA also argued that the interpretation results in a design standard, which it stated the agency does not have the authority to establish except when necessitated by safety. SEMA also argued that the interpretation results in a design standard that is improperly delegated to the vehicle manufacturers.

Limitations on aftermarket manufacturers and consumers. Another concern raised by the organizations was their belief that, under the interpretation, the standard imposes inappropriate limitations on aftermarket manufacturers and consumers. MEMA *et al.* stated that aftermarket lighting manufacturers suddenly find themselves relegated to a technology-restrictive ''me too'' position of cloning their lamp's light sources and, thus, essentially performance to that of the OE design. Those organizations argued that manufacturers of replacement lamps for OEM vehicle manufacturers and the manufacturers of vehicle compatible aftermarket replacement lamps should be given the full design freedom allowed for OEMs as long as all performance, functional and positioning criteria of FMVSS 108 are met and electrical compatibility with the intended vehicle is provided.

MEMA *et al.* stated that owners of motor vehicles and trailers should be allowed to replace the original lighting

equipment with any system that meets the performance, functional and positioning requirements of FMVSS 108, and which is electrically compatible with their vehicles. They argued that a requirement that owners use the same light source will severely limit the ability of consumers to benefit from improvements in lighting safety and durability, while at the same time increase the cost of supplying aftermarket lamps across a wide range of vehicle applications and special situations. According to those organizations, the customer's opportunities for vehicle personalization and freedom to choose products offering performance attributes tailored to his or her needs, while still meeting basic safety requirements, is also significantly restricted by the standard under the interpretation.

Final stage manufacturers. MEMA *et al.* and NTEA also requested clarification as to how the interpretation applies with respect to final stage manufacturers. MEMA *et al.* stated that by its terms, the interpretation is limited to replacement, or aftermarket, lamp applications. It sought clarification that the interpretation does not apply to final stage manufacturers. NTEA requested clarification that the final stage manufacturer is the vehicle manufacturer for purposes of this interpretation and able to install compliant lighting in the manner they believe is most appropriate for the vehicle.

Revised Interpretation

In responding to the requests for reconsideration, we begin by noting that both the initial interpretation, as well as the one provided today, are interpretations of existing language of FMVSS No. 108, and not amendments to the standard. The practice of requesting public comments on a draft interpretation and/or publishing an interpretation in the **Federal Register** is neither intended to nor in fact transforms an interpretation into a rulemaking. Moreover, as indicated above, we will respond to a letter requesting that we reconsider a notice of interpretation in the same manner as we would respond to a letter requesting that we reconsider a letter of interpretation.

On reconsideration, we have decided to modify the interpretation we provided in the October 2004 notice of interpretation. As discussed below, we believe the specific language of FMVSS No. 108 warrants a less restrictive, and less complicated, interpretation.

Primary interpretation. As indicated above, FMVSS No. 108's current requirement for replacement equipment, set forth in paragraph S5.8.1 of the standard, reads as follows:

> Except as provided below, each lamp, reflective device, or item of associated equipment manufactured to replace any lamp, reflective device, or item of associated equipment on any vehicle to which this standard applies shall be designed to conform to this standard.

This language is relatively straightforward. For any particular item of lighting equipment, *e.g.*, a lamp, FMVSS No. 108 states only that if a lamp is manufactured to replace a lamp on a vehicle to which the standard applies, it must be designed to conform to the standard. It does not say anything about the replacement lamp's being required to have the same type of light source as the OE lamp. Moreover, while it is true that, unlike other lamps, FMVSS No. 108 specifically regulates headlamp systems including their light sources, neither the language of S5.8.1 nor any other language in the standard requires replacement headlamps to use the same light sources as the OE headlamps.

Under our revised interpretation, it is our opinion that a lamp (or other item of lighting equipment, as relevant) manufactured to replace a lamp on a vehicle to which the standard applies is permitted under S5.8.1 so long as the vehicle manufacturer could have certified the vehicle to FMVSS No. 108 using the replacement lamp instead of the lamp it actually used. To the extent the vehicle manufacturer could have certified the vehicle using the replacement lamp, instead of the lamp it actually used, we believe the replacement lamp should be viewed as being designed to conform to FMVSS No. 108. This includes, but is not limited to, replacement headlamps using different light sources than the OE headlamps.

Photometric and other specific requirements. Our revised interpretation means, of course, that the replacement lamp must meet all photometric, environmental, location, material, color, area, wiring, markings, and other requirements specified in FMVSS No. 108 for that type of lamp, reflective device, or other item of equipment (in the case of a combination lamp, it must meet these requirements for each function).

Functions. Our revised interpretation also means that the replacement lamp must include all of the functions of the lamp, reflective device, or item of associated equipment, including a combination lamp, it is intended to replace (other than functions not required by FMVSS No. 108 for vehicles). This is so because the vehicle manufacturer could not have certified the vehicle using the replacement lamp instead of the lamp it actually used unless these requirements were met.

Paired lamps. As to paired lamps used on opposite sides of the vehicle, we recognize that the issue of whether the vehicle manufacturer could have certified the vehicle using one of the replacement lamps in a paired set instead of the lamp it actually used may be dependent on whether the other lamp in the paired set was also used. For example, FMVSS No. 108 requires most front and rear mounted lighting equipment to be ''at the same height'' when more than one item is required, and to be of the same color. If a replacement combination lamp is restyled to incorporate changes in the height or color of these items, the vehicle manufacturer could only have certified the vehicle using this replacement lamp if it used both of the paired lamps, one on each side of the vehicle.

For purposes of interpreting S5.8.1 for paired lamps used on opposite sides of the vehicle, we believe the simplest and most appropriate approach is to assume that both of the paired lamps would be used, one on each side of the vehicle. Since the use of matching lamps on opposite sides of the vehicle is a universal practice, we believe this is a commonsense way of interpreting the standard. That is, and as discussed further below, there is no reason to believe in the case of restyled lamps that consumers will not ordinarily maintain matching lamps on opposite sides of the vehicle.

We considered the possibility of interpreting the standard as requiring that restyled paired lamps used on opposite sides of the vehicle only be sold in pairs in this type of situation, since the use of only one such lamp would take the vehicle out of compliance with the standard. However, we decided not to do so. First, we do not believe such an interpretation follows well from the text of S5.8.1. Second, we recognize that there are situations in which consumers might replace a pair of lamps and then have a need to replace one of the replacement lamps. In such a situation, there would be no reason to require the consumer to buy two lamps instead of one.

As a practical matter, however, we believe that restyled paired lamps will generally be sold in pairs. Moreover, we believe that consumers will generally use both lamps in the pairs, since use of only one of the restyled lamps would create an odd, unbalanced look. We also observe that 49 U.S.C. 30122 prohibits, inter alia, distributors, dealers, and

motor vehicle repair businesses from knowingly making inoperative any part of a device or element of design installed on or in a motor vehicle or motor vehicle equipment in compliance with FMVSS No. 108. As such, these businesses are prohibited by the Safety Act from installing a single restyled lamp on a motor vehicle if it would have the effect of taking the vehicle out of compliance with the standard.

Additional lamps and devices sold with replacement lamps. In considering whether the vehicle manufacturer could have certified the vehicle using the replacement lamp instead of the lamp it actually used, we would not otherwise consider additional devices, such as other separate lamps or reflective devices, even if they are sold together with the replacement lamp. Thus, it would not be permissible under paragraph S5.8.1 to manufacture sets of replacement combination lamps if required functions were moved from one combination lamp to another, or removed from a combination lamp but included as a separate item in the package.

This situation is not comparable to the one in which paired lamps are used on opposite sides of the vehicle. As discussed above, the language of paragraph S5.8.1 requires that if a lamp is manufactured to replace a lamp installed on a vehicle to which the standard applied, it must be designed to conform to the standard. The focus is thus on lamp for lamp replacement.

While we believe it is reasonable and commonsense to assume that consumers will generally maintain matching lamps on opposite sides of their vehicles, and are taking account of that in our interpretation, we are not aware of any similar reason to assume that consumers will necessarily use all of the lamps included in replacement sets more generally. In particular, there is a greater chance that a consumer may not use all of the lamps in such replacement sets, since the use of only some of the lamps would not necessarily give the vehicle an odd, unbalanced appearance. For example, if a replacement lamp set consisted of four lamps across the rear of a vehicle, a consumer might replace only the outer lamps.

In addition, the safety consequences of a consumer's not using all of the lamps would be much greater. In the case of paired lamps used on opposite sides of the vehicle, the failure of a consumer to replace both lamps could result in required functions being at different heights or having different colors on opposite sides of the vehicle. In this other case, however, a required safety function would be lost altogether.

Termination of related rulemaking. In our October 2004 interpretation, we announced that we had decided to initiate rulemaking to amend FMVSS No. 108 to address issues related to restyled replacement equipment. We were concerned that, under that interpretation, the standard was unnecessarily design-restrictive for restyled lamps in some situations. This is no longer the case under our revised interpretation (see especially our discussion of paired lamps above), and NHTSA has therefore decided to terminate that rulemaking.

Effect on previous interpretations. This notice of interpretation modifies and supersedes our October 2004 interpretation, to the extent that it is inconsistent. It also supersedes our March 13, 2003 interpretation to Mr. Galen Chen concerning replacement headlamp light sources.

Location of required functions. We note that we are not changing our October 2004 interpretation with respect to location of required functions. In that document, we addressed this issue as follows:

> Another issue raised by Calcoast's letter is how compliance of replacement equipment with FMVSS No. 108 is assessed with respect to location requirements. In our draft interpretation, we stated that because FMVSS No. 108 requires rear reflex reflectors to be ''as far apart as practicable,'' an aftermarket product that moves the reflex reflectors closer together would not conform to the requirements of the standard, since the OE equipment's placement was clearly practicable to achieve.
>
> We have considered the argument made by some commenters, including the Alliance, that replacement lamp manufacturers should have flexibility in this area. However, given the language of the standard, we do not believe it would be appropriate to change our interpretation in this area.
>
> In particular, while there may be questions of fact in some situations as to what constitutes ''as far apart as practicable'' in the context of OE lighting, such questions are narrower for aftermarket lighting manufacturers. This is because the placement of the OE lighting sets a baseline for what is practicable. Again, an aftermarket product that moves the reflex reflectors closer together would not conform to the requirements of the standard, since the OE equipment's placement was clearly practicable to achieve. 69 FR at 60469 (footnote omitted).

Heavy vehicles and generic lighting. We also note that while our interpretation of S5.8.1 is not dependent on the size of the vehicle for which a lamp is intended, it has a more limited application to aftermarket lighting equipment for heavy vehicles than to light vehicles. The specific context of the questions asked by Calcoast was aftermarket combination lamps for light vehicles, such as passenger cars. These lamps are typically designed for specific models and can only be installed on those models in the same location as the lamps they replace.

However, for heavy vehicles, lighting equipment is often generic and not designed for specific models. Truck-Lite, for example, commented on our notice of draft interpretation that it sells many kinds of lighting devices through catalog sales to hundreds of vehicle manufacturers whose equipment it has no way of knowing about.

Consistent with our discussion in the October 2004 notice of interpretation, we note that our interpretation does not mean that the manufacturer of generic lighting equipment has the responsibility for ensuring correct selection and installation of its equipment. On the other hand, under our interpretation, a manufacturer of aftermarket lighting equipment could not design or recommend lighting equipment for a specific vehicle if the vehicle manufacturer could not have certified the vehicle using that lighting equipment instead of the lighting equipment it actually used.

Final stage manufacturers. Finally, as to the requests for clarification as to how the interpretation applies with respect to final stage manufacturers, we note that this issue is still relevant under our revised interpretation. As MEMA *et al.* suggested, the interpretation is limited to replacement, or aftermarket, lamp applications.

As we explained at the beginning of this document, FMVSS No. 108 is both a vehicle standard and an equipment standard. That is, under the standard, vehicle manufacturers are required to certify that a new vehicle meets FMVSS No. 108's requirements with respect to lamps, reflective devices, and associated equipment. In addition, the standard also applies to lamps, reflective devices, and associated equipment manufactured to replace any lamp, reflective device, or item of associated equipment on any vehicle to which the standard applies.

Paragraph S5.8.1 does not apply to new vehicles. Final stage manufacturers and persons altering a vehicle prior to its first retail sale are not limited by the provisions of paragraph S5.8.1, but must instead ensure the compliance of the vehicle with FMVSS No. 108 as a vehicle standard. Thus, our interpretation of paragraph S5.8.1 does not place limits on the lighting equipment that can be used by final stage manufacturers.

Issued: October 26, 2005.

Stephen P. Wood,

Acting Chief Counsel.

[FR Doc. 05–21725 Filed 10–31–05; 8:45 am]

BILLING CODE 4910–59–P

DEPARTMENT OF TRANSPORTATION

Surface Transportation Board

[STB Finance Docket No. 34658]

The Alaska Railroad Corporation—Petition for Exemption to Construct and Operate a Rail Line Between Eielson Air Force Base (North Pole) and Fort Greely (Delta Junction), Alaska

AGENCY: Surface Transportation Board, DOT.

ACTION: Notice of Intent to Prepare an Environmental Impact Statement, Notice of Availability of Draft Scope of Study for the Environmental Impact Statement, Notice of Scoping Meetings, and Request for Comments.

SUMMARY: The Alaska Railroad Corporation plans to file a petition with the Surface Transportation Board (Board) pursuant to 49 U.S.C. 10502 for authority to construct and operate a new rail line between Eielson Air Force Base (located south of Fairbanks) and the Delta Junction/Fort Greely area. The project would involve the construction and operation of approximately 80 miles of new main line track and could include an approximately 15-mile rail spur to the U.S. Air Force's Blair Lakes training area. Because the construction and operation of this project has the potential to result in significant environmental impacts, the Board's Section on Environmental Analysis (SEA) has determined that the preparation of an Environmental Impact Statement (EIS) is appropriate. The purpose of this Notice of Intent is to notify individuals and agencies interested in or affected by the proposed project of the decision to require an EIS. SEA is holding public scoping meetings as part of the EIS process. Additionally, as part of the scoping process, SEA has developed a draft Scope of Study for the EIS.

DATES AND LOCATIONS: Scoping meetings will be held on:

December 6, 2005, 4–8 pm at the City Council Chambers, 125 Snowman Lane, North Pole, Alaska

December 7, 2005, 4–8 pm at Jarvis West Building, Mile 1420.5 Alaska Highway, Delta Junction, Alaska

December 8, 2005, 4–8 pm at Lousaac Library Public Conference Room, 3600 Denali Street, Anchorage, Alaska

The public scoping meetings will be informal meetings in a workshop format during which interested persons may ask questions about the proposal and the Board's environmental review process, and advise the Board's representative about potential environmental effects of the project. In keeping with the workshop format of the scoping meetings, there will no formal presentations made by agency representatives. Rather, staff will be available to answer questions and receive comments individually. SEA has made available for public comment the draft Scope of Study contained in this notice.

The meeting locations comply with the Americans With Disabilities Act. Persons that need special accommodations should telephone SEA's toll-free number for the project at 1–800–359–5142.

SEA will issue a final Scope of Study after the close of the scoping comment period. Written comments on the Scope of Study and potential environmental effects of the project are due January 13, 2005.

Filing Environmental Comments: Interested persons and agencies are invited to participate in the EIS scoping process. Comments should be submitted to: Surface Transportation Board, Case Control Unit, 1925 K Street, NW., Washington, DC 20423–0001.

To ensure proper handling of your comments, please mark your submission: Attention: David Navecky, Environmental Filing.

Environmental comments may also be filed electronically on the Board's Web site, *www.stb.dot.gov*, by clicking on the ''E–FILING'' link. Please refer to STB Finance Docket No. 34658 in all correspondence, including e-filings, addressed to the Board.

SUPPLEMENTARY INFORMATION:

Background: The proposed Northern Rail Extension Project includes construction of approximately 80 miles of new rail line connecting the existing rail line near Eielson AFB near North Pole, Alaska to a point near Fort Greely and the Donnelly Training Area near Delta Junction, Alaska. The proposed project could also include the construction of a 15-mile spur line from Flag Hill to the Blair Lakes Military Training Area. As a result of this project, the U.S. Army would have year round access to the Tanana Flats and Donnelly training areas and all the major military installations in Alaska would be accessible by rail through Fort Greely. The EIS will analyze the potential impacts of the proposed route, the ''no-build'' alternative and possible alternative routes.

Environmental Review Process: The National Environmental Policy Act (NEPA) process is intended to assist the Board and the public in identifying and assessing the potential environmental consequences of a proposed action before a decision on the proposed action is made. SEA is responsible for ensuring that the Board complies with NEPA and related environmental statutes. The first stage of the EIS process is scoping. Scoping is an open process for determining the scope of environmental issues to be addressed in the EIS. As part of the scoping process, SEA has developed, and is making available in today's notice, a draft Scope of Study for the EIS. Concurrently, scoping meetings will be held to provide further opportunities for public involvement and input during the scoping process. At the conclusion of the scoping and comment period, SEA will issue a final Scope of Study for the EIS.

After issuing the final Scope of Study, SEA will prepare a Draft EIS (DEIS) for the project. The DEIS will address those environmental issues and concerns identified during the scoping process. It will also contain SEA's preliminary recommendations for environmental mitigation measures. The DEIS will be made available upon its completion for review and comment by the public, government agencies and other interested parties. SEA will prepare a Final EIS (FEIS) that considers comments on the DEIS. In reaching its decision in this case, the Board will take into account the DEIS, the FEIS, and all environmental comments that are received.

SEA has recently invited several other Federal agencies to participate in this EIS process as cooperating agencies on the basis their special expertise or jurisdiction by law. These agencies include: U.S. Department of Defense, Alaskan Command; U.S. Department of Defense, U.S. Army Garrison—Alaska; U.S. Department of Defense, 354th Fighter Wing Command; U.S. Army Engineers District—Alaska; U.S. Department of Interior, Bureau of Land Management—Northern Field Office; U.S. Coast Guard, Seventeenth Coast Guard District; U.S. Department of Transportation, Federal Railroad Administration; and U.S. Department of Transportation, Federal Transit Administration—Region 10.

FOR FURTHER INFORMATION CONTACT: David Navecky, Section of Environmental Analysis, Surface Transportation Board, 1925 K Street, NW., Washington, DC 20423–0001, or call SEA's toll-free number for the project at 1–800–359–5142. Assistance

for the hearing impaired is available through the Federal Information Relay Service (FIRS) at 1–800–877–8339. The website for the Surface Transportation Board is *www.stb.dot.gov*.

Draft Scope of Study for the EIS

Proposed Action and Alternatives

The proposed Northern Rail Extension Project includes construction of approximately 80 miles of new rail line connecting the existing rail line near Eielson AFB near North Pole, Alaska to a point near Fort Greely and the Donnelly Training Area near Delta Junction, Alaska. The proposed project could also include the construction of a 15-mile spur line from Flag Hill to the Blair Lakes Military Training Area. The proposed line would provide freight and passenger rail services for defense facilities, commercial interests, and communities in or near the project corridor. The proposed rail line would also provide the U.S. Army with year round access to the Tanana Flats and Donnelly training areas and all the major military installations in Alaska would be accessible by rail.

The reasonable and feasible alternatives that will be evaluated in the EIS are (1) construction and operation of the proposed project along the proposed alignments, (2) other alternatives that might be identified during the scoping process, and (3) the no-action alternative.

Environmental Impact Analysis

Proposed New Construction

Analysis in the EIS will address the proposed activities associated with the construction and operation of new rail facilities and their potential environmental impacts, as appropriate.

Impact Categories

The EIS will address potential impacts from the proposed construction and operation of new rail facilities on the human and natural environment. Impact areas addressed will include the categories of land use, biological resources, water resources, geology and soils, air quality, noise, energy resources, socioeconomics as they relate to physical changes in the environment, safety, transportation systems, cultural and historic resources, subsistence, recreation, aesthetics, and environmental justice. The EIS will include a discussion of each of these categories as they currently exist in the project area and will address the potential impacts from the proposed project on each category as described below:

1. Land Use

The EIS will:

a. Describe existing land use patterns within the project area and identify those land uses that would be potentially impacted by new rail line construction.

b. Describe the potential impacts associated with the proposed new rail line construction to land uses identified within the project area. Such potential impacts may include incompatibility with existing land uses, and conversion of land to railroad uses.

c. Propose mitigative measures to minimize or eliminate potential project impacts to land use, as appropriate.

2. Biological Resources

The EIS will:

a. Describe the existing biological resources within the project area, including vegetative communities, wildlife and fisheries, wetlands, and Federal and state threatened or endangered species and the potential impacts to these resources resulting from construction and operation of new rail facilities.

b. Describe any wildlife sanctuaries, refuges, and national or state parks, forests, or grasslands within the project area and the potential impacts to these resources resulting from construction and operation of new rail line.

c. Propose mitigative measures to minimize or eliminate potential project impacts to biological resources, as appropriate.

3. Water Resources

The EIS will:

a. Describe the existing surface water and groundwater resources within the project area, including lakes, rivers, streams, stock ponds, wetlands, and floodplains and the potential impacts on these resources resulting from construction and operation of new rail line.

b. Describe the permitting requirements for the proposed new rail line construction regarding wetlands, stream and river crossings, water quality, and erosion control.

c. Propose mitigative measures to minimize or eliminate potential project impacts to water resources, as appropriate.

4. Geology and Soils

The EIS will:

a. Describe the geology, soils, and permafrost found within the project area, including unique or problematic geologic formations or soils and prime farmland and hydric soils and the potential impacts on these resources resulting from the construction and operation of new rail line.

b. Describe measures employed to avoid or construct through unique or problematic geologic formations, soils, or permafrost.

c. Propose mitigative measures to minimize or eliminate potential project impacts to geology and soils, as appropriate.

5. Air Quality

The EIS will:

a. Evaluate rail-related air emissions, if the proposed project affects a Class I or non-attainment area as designated under the Clean Air Act.

b. Discuss and evaluate the potential air emissions increases from vehicle delays at new at-grade road/rail crossings. Emissions from vehicle delays will be factored into the emissions estimates for the affected area, as appropriate.

c. Describe the potential air quality impact resulting from new rail line construction activities.

d. Propose mitigative measures to minimize or eliminate potential project impacts to air quality, as appropriate.

6. Noise

The EIS will:

a. Describe the potential noise impacts during new rail line construction.

b. Describe the potential noise impacts of new rail line operation.

c. Propose mitigative measures to minimize or eliminate potential project impacts to sensitive noise receptors, as appropriate.

7. Energy Resources

The EIS will:

a. Describe the potential impact of the new rail line on the distribution of energy resources in the project area, including petroleum and gas pipelines and overhead electric transmission lines.

b. Propose mitigative measures to minimize or eliminate potential project impacts to energy resources, as appropriate.

8. Socioeconomics

The EIS will:

a. Describe the effects of a potential influx of construction workers and the potential increase in demand for local services interrelated with natural or physical environmental effects.

b. Propose mitigative measures to minimize or eliminate potential project adverse impacts to social and economic resources, as appropriate.

9. Safety

The EIS will:

a. Describe existing road/rail grade crossing safety and the potential for an increase in accidents related to the new rail operations, as appropriate.

b. Describe existing rail operations and the potential for increased probability of train accidents, as appropriate.

c. Describe hazardous materials safety factors for the transportation of hazardous materials and the potential for a release of those materials, as appropriate.

d. Describe the potential for disruption and delays to the movement of emergency vehicles due to new rail line construction and operation.

e. Propose mitigative measures to minimize or eliminate potential project impacts to safety, as appropriate.

10. Transportation Systems

The EIS will:

a. Describe the potential impacts of new rail line construction and operation on the existing transportation network in the project area, including vehicular delays at grade crossings.

b. Describe potential impacts to navigation associated with new bridges.

c. Propose mitigative measures to minimize or eliminate potential project impacts to transportation systems, as appropriate.

11. Cultural and Historic Resources

The EIS will:

a. Describe the potential impacts to historic structures or districts previously recorded and determined potentially eligible, eligible, or listed on the National Register of Historic Places within or immediately adjacent to the right-of-way for the proposed rail alignments.

b. Describe the potential impacts to archaeological sites previously recorded and either listed as unevaluated or determined potentially eligible, eligible, or listed on the National Register of Historic Places within the right-of-way for the proposed rail alignments.

c. Describe the potential impacts to historic structures or districts identified by ground survey and determined potentially eligible, eligible, or listed on the National Register of Historic Places within or immediately adjacent to the right-of-way for the proposed rail alignments.

d. Describe the potential impacts to archaeological sites identified by ground survey and determined potentially eligible, eligible, or listed on the National Register of Historic Places within the right-of-way for the proposed rail alignments.

e. Describe the potential general impacts to paleontological resources in the project area due to project construction, if necessary and required.

f. Propose mitigative measures to minimize or eliminate potential project impacts to cultural and historic resources, as appropriate.

12. Subsistence

The EIS will:

a. Describe the potential impacts of the proposed new rail line construction and operation on subsistence activities in the project area.

b. Propose mitigative measures to minimize or eliminate potential project impacts on subsistence activities, as appropriate.

13. Recreation

The EIS will:

a. Describe the potential impacts of the proposed new rail line construction and operation on recreational opportunities provided in the project area.

b. Propose mitigative measures to minimize or eliminate potential project impacts on recreational opportunities, as appropriate.

14. Aesthetics

The EIS will:

a. Describe the potential impacts of the proposed new rail line construction on any areas identified or determined to be of high visual quality.

b. Describe the potential impacts of the proposed new rail line construction on any waterways considered for or designated as wild and scenic.

c. Propose mitigative measures to minimize or eliminate potential project impacts on aesthetics, as appropriate.

15. Environmental Justice

The EIS will:

a. Describe the demographics in the project area and the immediate vicinity of the proposed new construction, including communities potentially impacted by the construction and operation of the proposed new rail line.

b. Evaluate whether new rail line construction or operation would have a disproportionately high and adverse impact on any minority or low-income groups.

c. Propose mitigative measures to minimize or eliminate potential project impacts on environmental justice populations, as appropriate.

16. Cumulative Impacts

The EIS will address the impact on the environment which results from the incremental impact of the action when added to other past, present, and reasonably foreseeable future actions regardless of what agency (Federal or non-federal) or person undertakes such actions.

Decided: October 26, 2005.

By the Board, Victoria Rutson, Chief, Section of Environmental Analysis.

Vernon A. Williams,

Secretary.

[FR Doc. 05–21718 Filed 10–31–05; 8:45 am]

BILLING CODE 4915–00–P

DEPARTMENT OF TRANSPORTATION

Surface Transportation Board

[STB Finance Docket No. 34767]

Transtar, Inc.—Continuance in Control Exemption—Delray Connecting Railroad Company

Transtar, Inc. (Transtar), a noncarrier, has filed a verified notice of exemption to continue in control of Delray Connecting Railroad Company (Delray), a Class III rail carrier, upon Transtar's acquiring all of Delray's issued and outstanding stock from Transtar's parent, United States Steel Corporation (USS).

The exemption became effective on October 18, 2005 (7 days after the date of filing).[1]

USS, a noncarrier, owns all of the issued and outstanding stock of Transtar, which is a noncarrier holding company. Transtar in turn owns all of the issued and outstanding stock of five common carrier railroads: Elgin, Joliet and Eastern Railway Company (Class II); Birmingham Southern Railroad Company (Class III); The Lake Terminal Railroad Company (Class III); McKeesport Connecting Railroad Company (Class III); and Union Railroad Company (Class III) (collectively, the Transtar Railroads). The common control of the Transtar Railroads by USS (formerly USX Corporation) through Transtar was the subject of exemption proceedings before the agency in *USX Corporation—Control Exemption—Transtar, Inc.*, STB Finance Docket No. 33942 (STB served Nov. 30, 2000) and *Transtar Holdings, L.P.—Corporate Family Exemption—Transtar, Inc.*, Finance Docket No. 32411 (ICC served Dec. 29, 1993). USS acquired through stock acquisition, and assumed control of, Delray pursuant to a notice of exemption in *United States Steel Corporation—Acquisition of Control Exemption—Delray Connecting Railroad Company*, STB Finance Docket

[1] Transtar explains that this transaction was consummated on May 31, 2005, under the mistaken belief that it was an inter-corporate transaction involving parties for which exemption authority had previously been secured, and that additional approval or exemption was not required.

No. 34311 (STB served Feb. 19, 2003). Transtar now seeks to acquire all of the stock of Delray from USS to consolidate all of the USS railroad subsidiaries under the mantle of Transtar. Delray is a switching and terminal railroad that operates 15.46 miles of track, all of which are located in the downriver district of Detroit, MI.

Transtar states that: (i) The Transtar Railroads and Delray do not connect with each other or any railroads in their corporate family; (ii) the continuance in control is not part of a series of anticipated transactions that would connect the railroads with each other or any other railroad in their corporate family; and (iii) the transaction does not involve a Class I railroad. Transtar also states that the transaction will not result in: (i) Any adverse changes in service levels to the public; (ii) significant operational changes; or (iii) changes in the competitive balance with carriers outside the corporate family. Therefore, the transaction is exempt from the prior approval requirements of 49 U.S.C. 11323. *See* 49 CFR 1180.2(d)(2) and (3).

Under 49 U.S.C. 10502(g), the Board may not use its exemption authority to relieve a rail carrier of its statutory obligation to protect the interests of its employees. Because the transaction involves at least one Class II and one or more Class III rail carriers, the exemption is subject to labor protection requirements of 49 U.S.C. 11326(b).

If the notice contains false or misleading information, the exemption is void *ab initio*. Petitions to revoke the exemption under 49 U.S.C. 10502(d) may be filed at any time. The filing of a petition to revoke will not automatically stay the transaction.

An original and 10 copies of all pleadings, referring to STB Finance Docket No. 34767, must be filed with the Surface Transportation Board, 1925 K Street, NW., Washington, DC 20423–0001. In addition, a copy of each pleading must be served on: John A. Vuono, Vuono & Gray, LLC, 2310 Grant Building, Pittsburgh, PA 15219.

Board decisions and notices are available on our Web site at *http://www.stb.dot.gov.*.

Decided: October 25, 2005.

By the Board, David M. Konschnik, Director, Office of Proceedings.

Vernon A. Williams,

Secretary.

[FR Doc. 05–21613 Filed 10–31–05; 8:45 am]

BILLING CODE 4915–01–P

DEPARTMENT OF THE TREASURY

Submission for OMB Review; Comment Request

October 24, 2005.

The Department of Treasury has submitted the following public information collection requirement(s) to OMB for review and clearance under the Paperwork Reduction Act of 1995, Public Law 104–13. Copies of the submission(s) may be obtained by calling the Treasury Bureau Clearance Officer listed. Comments regarding this information collection should be addressed to the OMB reviewer listed and to the Treasury Department Clearance Officer, Department of the Treasury, Room 11000, 1750 Pennsylvania Avenue, NW., Washington, DC 20220.

DATES: Written comments should be received on or before December 1, 2005 to be assured of consideration.

Internal Revenue Service (IRS)

OMB Number: 1545–1414.

Type of Review: Extension.

Title: Credit for Employer Social Security and Medicare Taxes Paid on Certain Employee Tips.

Form: IRS form 8846.

Description: Employers in food or beverage establishments where tipping is customary can claim an income tax credit for the amount of social security and Medicare taxes paid (employer's share) on tips, other than tips used to meet the minimum wage requirements.

Respondents: Business or other for-profit.

Estimated Total Burden Hours: 492,465 hours.

Clearance Officer: Glenn P. Kirkland, (202) 622–3428. Internal Revenue Service, Room 6516, 1111 Constitution Avenue, NW., Washington, DC 20224.

OMB Reviewer: Alexander T. Hunt, (202) 395–7316. Office of Management and Budget, Room 10235, New Executive Office Building, Washington, DC 20503.

Michael A. Robinson,

Treasury PRA Clearance Officer.

[FR Doc. 05–21742 Filed 10–31–05; 8:45 am]

BILLING CODE 4830–01–P

DEPARTMENT OF THE TREASURY

Submission for OMB Review; Comment Request

October 25, 2005.

The Department of Treasury has submitted the following public information collection requirement(s) to OMB for review and clearance under the Paperwork Reduction Act of 1995, Public Law 104–13. Copies of the submission(s) may be obtained by calling the Treasury Bureau Clearance Officer listed. Comments regarding this information collection should be addressed to the OMB reviewer listed and to the Treasury Department Clearance Officer, Department of the Treasury, Room 11000, 1750 Pennsylvania Avenue, NW. Washington, DC 20220.

DATES: Written comments should be received on or before December 1, 2005 to be assured of consideration.

Bureau of Engraving and Printing (BEP)

OMB Number: 1520–0001.

Type of Review: Extension.

Title: Owner's Affidavit of Partial Destruction of Mutilated Currency.

Form: BEP form 5283.

Description: The Office of Currency Standards, Bureau of Engraving and Printing requests owners of partially destroyed U.S. currency to complete a notarized affidavit (BEP 5283) for each claim submitted when substantial portions of notes are missing.

Respondents: Individuals or households.

Estimated Total Burden Hours: 90 hours.

OMB Number: 1520–0002.

Type of Review: Extension.

Title: Claims for Amounts Due in the Case of Deceased Owner of Mutilated Currency.

Form: BEP form 5287.

Description: The Office of Currency Standards, Bureau of Engraving and Printing uses form BEP 5287 to determine ownership in cases of a deceased owner mutilated currency.

Respondents: Individuals or households.

Estimated Total Burden Hours: 110 hours.

Clearance Officer: Pamela V. Grayson, (202) 874–2212, Bureau of Engraving and Printing, 14th & C Street, SW., Washington, DC 20228.

OMB Reviewer: Alexander T. Hunt, (202) 395–7316, Office of Management and Budget, Room 10235, New Executive Office Building, Washington, DC 20503.

Michael A. Robinson,

Treasury PRA Clearance Officer.

[FR Doc. 05–21743 Filed 10–31–05; 8:45 am]

BILLING CODE 4840–01–P

DEPARTMENT OF THE TREASURY

Fiscal Service

Federal Debt Collection and Discount and Rebate Evaluation

AGENCY: Financial Management Service, Fiscal Service, Treasury.

ACTION: Notice of rate for use in Federal debt collection and discount and rebate evaluation.

SUMMARY: Pursuant to Section 11 of the Debt Collection Act of 1982, as amended, (31 U.S.C. 3717), the Secretary of the Treasury is responsible for computing and publishing the percentage rate to be used in assessing interest charges for outstanding debts owed to the Government. Treasury's Cash Management Requirements (1 TFM 6–8000) prescribe use of this rate by agencies as a comparison point in evaluating the cost-effectiveness of a cash discount. In addition, 5 CFR Part 1315.8 of the Prompt Payment rule on ''Rebates'' requires that this rate be used in determining when agencies should pay purchase card invoices when the card issuer offers a rebate. Notice is hereby given that the applicable rate is 2.00 percent for calendar year 2006.

DATES: The rate will be in effect for the period beginning January 1, 2006, and ending on December 31, 2006.

FOR FURTHER INFORMATION CONTACT: Inquiries should be directed to the Agency Enterprise Solutions Division, Financial Management Service, Department of the Treasury, 401 14th Street, SW., Washington, DC 20227 (Telephone: 202–874–6650).

SUPPLEMENTARY INFORMATION: The rate reflects the current value of funds to the Treasury for use in connection with Federal Cash Management systems and is based on investment rates set for purposes of Pub. L. 95–147, 91 Stat. 1227. Computed each year by averaging Treasury Tax and Loan (TT&L) investment rates for the 12-month period ending every September 30, rounded to the nearest whole percentage, for applicability effective each January 1, the rate is subject to quarterly revisions if the annual average, on a moving basis, changes by 2 percentage points. The rate in effect for the calendar year 2006 reflects the average investment rates for the 12-month period that ended September 30, 2005.

Dated: October 19, 2005.

Gary Grippo,

Assistant Commissioner, Federal Finance.

[FR Doc. 05–21700 Filed 10–31–05; 8:45 am]

BILLING CODE 4810–35–M

DEPARTMENT OF VETERANS AFFAIRS

Annual Pay Ranges for Physicians and Dentists of the Veterans Health Administration (VHA)

AGENCY: Department of Veterans Affairs.

ACTION: Notice.

SUMMARY: As required by the ''Department of Veterans Affairs Health Care Personnel Enhancement Act of 2004'' (Pub. L. 108–445, dated December 3, 2004) the Department of Veterans Affairs (VA) is hereby giving notice of annual pay ranges for Veterans Health Administration (VHA) physicians and dentists as prescribed by the Secretary for Department-wide applicability. The inception of these annual pay ranges enhances the flexibility of the Department to recruit, develop, and retain the most highly qualified providers to serve our Nation's veterans and maintain a standard of excellence in the VA healthcare system.

EFFECTIVE DATES: Annual pay ranges are effective on January 8, 2006.

FOR FURTHER INFORMATION CONTACT: Donna R. Schroeder, Director, Compensation and Classification Service (055), Office of Human Resources Management and Labor Relations, Department of Veterans Affairs, 810 Vermont Avenue, NW., Washington, DC 20420, (202) 273–9803.

SUPPLEMENTARY INFORMATION: Under 38 U.S.C. 7431(e)(1)(A), not less often than once every two years, the Secretary must prescribe for Department-wide applicability the minimum and maximum amounts of annual pay that may be paid to VHA physicians and dentists. Further, 38 U.S.C. 7431(e)(1)(B) allows the Secretary to prescribe separate minimum and maximum amounts of pay for a specialty or assignment. In construction of the annual pay ranges, 38 U.S.C. 7431(c)(4)(A) required the consultation of two or more national surveys of pay for physicians and dentists, as applicable, whether prepared by private, public, or quasi-public entities in order to make a general assessment of the range of pays payable to physicians and dentists. Lastly, 38 U.S.C. 7431(e)(1)(C) states amounts prescribed under paragraph 7431(e) shall be published in the **Federal Register**, and shall not take effect until at least 60 days after date of publication.

Background

The ''Department of Veterans Affairs Health Care Personnel Enhancement Act of 2004'' (Pub. L. 108–445) was signed by the President on December 3, 2004. The major provisions of the law established a new pay system for Veterans Health Administration (VHA) physicians and dentists consisting of base pay, market pay, and performance pay. While the base pay component is set by statute, market pay is intended to reflect the recruitment and retention needs for the specialty or assignment of a particular physician or dentist at a facility. Further, performance pay is intended to recognize the achievement of specific goals and performance objectives prescribed annually. These three components create a system of pay that is driven by both market indicators and employee performance, while recognizing employee tenure in VHA.

Discussion

The Department of Veterans Affairs (VA) performed an extensive search of salary survey data for physicians and dentists. The result was a wealth of information in the field of compensation. Upon completion of the initial review of the data collected, VA utilized those sources which most closely represented VA comparability in the areas of practice setting, employment environment, and hospital/healthcare system. Thus, the Association of American Medical Colleges (AAMC), Hospital and Healthcare Compensation Service (HHCS), Sullivan, Cotter, and Associates (S&C) and Physician Executive Management Center (PEMC), were collectively utilized as benchmarks from which to prescribe annual pay ranges for physicians and dentists across the scope of assignments/specialties within the Department. While aggregating the data, a preponderance of weight was given to those surveys which most directly resembled the environment of the Department.

An analysis of the data produced the emergence of natural groupings for consideration in constructing annual pay ranges to accommodate the more than thirty specialties that currently exist in the VA system. The benefit of grouping specialties into consolidated pay ranges allows VA to use multiple sources that yield a high number of physician salary data which helps to minimize disparities and aberrations that may surface from data involving smaller numbers of physicians and dentists for comparison and from sample change from year to year. Thus, by aggregating multiple survey sources into like groupings, greater confidence exists that the average compensation reported is truly representative. In addition, aggregation of data provides for a large enough sample size and provides pay range with maximum

flexibility for pay setting for the more than 15,000 VHA physicians and dentists.

In developing the annual pay ranges, a few distinctive principles were factored into the compensation analysis of the data. The first principle is to ensure that both the minimum and maximum salary is at a level that accommodates special employment situations, from fellowships and medical research career development awards to Nobel Laureates, high-cost areas, and internationally renowned clinicians. The second principle, to attempt to establish a rate range of +/−25 percent of the mean, is imperative to provide ranges large enough to accommodate career progression, geographic differences, sub-specialization, and special factors. This principle is also the standard recommended by World@Work for professional compensation ranges.

All clinical specialities for VHA physicians and dentists were reviewed against relevant private sector data. The specialties were grouped into four clinical pay ranges that reflect comparable complexity in salary, recruitment, and retention considerations. Two additional pay ranges were compiled for VHA Chiefs of Staff and physicians and dentists in executive level administrative assignments at the facility, network, or headquarters level.

PAY TABLE 1.—CLINICAL SPECIALTY

Tier level	Minimum	Maximum
Tier 1	$90,000	$175,000
Tier 2	110,000	200,000
Tier 3	120,000	215,000
Tier 4	130,000	225,000

PAY TABLE 1.—COVERED CLINICAL SPECIALTIES

Admitting Physician.
Allergy and Immunology.
Endocrinology.
Geriatrics.
Infectious Diseases.
Internal Medicine/Primary Care/Family Practice.

PAY TABLE 1.—COVERED CLINICAL SPECIALTIES—Continued

Neurology.
Preventive Medicine.
Psychiatry.
Rheumatology.
General Practice—Dentistry.
Endodontics.
Periodontics.
Prosthodontics.
Assignments that do not require a specific specialty.

PAY TABLE 2.—CLINICAL SPECIALTY

Tier level	Minimum	Maximum
Tier 1	$90,000	$200,000
Tier 2	115,000	215,000
Tier 3	130,000	225,000
Tier 4	140,000	235,000

PAY TABLE 2.—COVERED CLINICAL SPECIALTIES

Dermatology.
Emergency Medicine.
Gastroenterology.
Gynecology.
Hematology—Oncology.
Nephrology.
Nuclear Medicine.
Ophthamology.
Pathology.
Physical Medicine & Rehabilitation/Physiatry/Spinal Cord Injury.
Pulmonary.
Oral Surgery.

PAY TABLE 3.—CLINICAL SPECIALTY

Tier Level	Minimum	Maximum
Tier 1	$90,000	$220,000
Tier 2	120,000	230,000
Tier 3	135,000	240,000
Tier 4	145,000	250,000

PAY TABLE 3.—COVERED CLINICAL SPECIALTIES

Cardiology.
General Surgery.
Otolaryngology.
Urology.

PAY TABLE 4.—CLINICAL SPECIALTY

Tier Level	Minimum	Maximum
Tier 1	$90,000	$255,000
Tier 2	125,000	275,000
Tier 3	140,000	285,000
Tier 4	150,000	295,000

PAY TABLE 4.—COVERED CLINICAL SPECIALTIES

Anesthesiology.
Cardio-Thoracic Surgery.
Neurosurgery.
Orthopedic Surgery.
Plastic Surgery.
Radiology.
Vascular Surgery.

PAY TABLE 5.—CHIEF OF STAFF

Tier Level	Minimum	Maximum
Tier 1	$150,000	$260,000
Tier 2	145,000	240,000
Tier 3	140,000	220,000

PAY TABLE 6.—EXECUTIVE ASSIGNMENTS

Tier Level	Minimum	Maximum
Tier 1	$110,000	$230,000
Tier 2	110,000	250,000

PAY TABLE 6.—COVERED EXECUTIVE ASSIGNMENTS

Chief Officer.
Deputy Under Secretary for Health.
Facility Director.
Network Chief Medical Officer.
Network Director.
VA Central Office Physician.
VA Central Office Dentist.

Dated: October 25, 2005.

R. James Nicholson,

Secretary of Veterans Affairs.

[FR Doc. 05–21640 Filed 10–31–05; 8:45 am]

BILLING CODE 8320–01–M

Federal Register

Tuesday,
November 1, 2005

Part II

Environmental Protection Agency

40 CFR Parts 51 and 52

Proposed Rule To Implement the Fine Particle National Ambient Air Quality Standards; Proposed Rule

ENVIRONMENTAL PROTECTION AGENCY

40 CFR Parts 51 and 52

[FRL–7969–1]

RIN 2060–AK74

Proposed Rule To Implement the Fine Particle National Ambient Air Quality Standards

AGENCY: Environmental Protection Agency (EPA).

ACTION: Proposed rulemaking.

SUMMARY: This proposed rule and preamble describe the requirements that States and Tribes must meet in their implementation plans for attainment of the fine particle ($PM_{2.5}$) national ambient air quality standards (NAAQS). The health effects associated with exposure to $PM_{2.5}$ are serious, including premature death, aggravation of heart and lung disease, and asthma attacks. Those particularly sensitive to $PM_{2.5}$ exposure include older adults, people with heart and lung disease, and children.

The EPA designated areas not attaining the $PM_{2.5}$ standards on December 17, 2004. The PM designations notice was published in the **Federal Register** on January 5, 2005 (70 FR 944) and became effective on April 5, 2005. On this same date, the Administrator signed a supplemental notice making certain changes to the designations based on 2002–2004 air quality data. The supplemental notice was published in the **Federal Register** on April 14, 2005 (70 FR 19844). A total of 39 areas with a population of 90 million were designated as nonattainment.

Within 3 years, each State having a nonattainment area must submit to EPA an attainment demonstration (and associated air quality modeling), adopted State regulations to reduce emissions of $PM_{2.5}$ and its precursors, and other supporting information demonstrating that the area will attain the standards as expeditiously as practicable. In order to address $PM_{2.5}$ problems, EPA believes that States should implement a balanced program to reduce emissions from regional sources [such as power plants emitting sulfur dioxide (SO_2) and nitrogen oxides (NO_X)] and local sources (such as cars, trucks, industrial sources, and various other combustion or burning-related activities). States should take into account national, State, and local emission reduction programs that are already in place and projected to provide future air quality benefits.

DATES: The comment period on this proposal ends on January 3, 2006. Comments must be postmarked by the last day of the comment period and sent directly to the Docket Office listed in **ADDRESSES** (in duplicate form if possible).

One public hearing will be held prior to the end of the comment period. The dates, times and locations will be announced separately. Please refer to **SUPPLEMENTARY INFORMATION** for additional information on the comment period and public hearings.

ADDRESSES: Comments may be submitted by mail to: Air Docket, Environmental Protection Agency, Mail code: 6102T, 1200 Pennsylvania Ave., NW., Washington, DC 20460, Attention Docket ID No. OAR–2003–0062.

Comments may also be submitted electronically, by facsimile, or through hand delivery/courier. Follow the detailed instructions provided under **SUPPLEMENTARY INFORMATION**.

Documents relevant to this action are available for public inspection at the EPA Docket Center, located at 1301 Constitution Avenue, NW., Room B102, Washington, DC between 8:30 a.m. and 4:30 p.m., Monday through Friday, excluding legal holidays. A reasonable fee may be charged for copying.

FOR FURTHER INFORMATION CONTACT: Regarding $PM_{2.5}$ implementation issues, contact Mr. Richard Damberg, U.S. Environmental Protection Agency, Office of Air Quality Planning and Standards, Mail Code C504–02, Research Triangle Park, NC 27711, phone number (919) 541–5592 or by e-mail at: *damberg.rich@epa.gov.* Regarding NSR issues, contact Mr. Raj Rao, U.S. Environmental Protection Agency, Office of Air Quality Planning and Standards, Mail Code C339–03, Research Triangle Park, NC 27711, phone number (919) 541–5344 or by e-mail at: *rao.raj@epa.gov.*

SUPPLEMENTARY INFORMATION: Section I of the preamble provides an overview of the $PM_{2.5}$ standards, health effects associated with $PM_{2.5}$, legal history, and EPA's overall strategy for reducing $PM_{2.5}$ pollution. Section II provides an overview of the pollutants and complex atmospheric chemistry that lead to $PM_{2.5}$ formation, the sources of emissions, and a discussion of policy options for addressing PM precursors in the $PM_{2.5}$ implemention program and the new source review (NSR) program.

Section III of the preamble describes the various core elements of the $PM_{2.5}$ implementation program, based primarily on the subpart 1 requirements of section 172 of the Clean Air Act (CAA). Important topics discussed in section III include attainment dates, attainment demonstrations and modeling, local emission reduction measures [reasonably available control technology (RACT) and reasonably available control measures (RACM)], and reasonable further progress (RFP). Section III also includes a subsection describing options for revising the NSR program to specifically address $PM_{2.5}$. A number of other topics are presented for informational purposes in section III, including innovative program guidance, emission inventory requirements, addressing $PM_{2.5}$ under the transportation conformity program, stationary source test methods for $PM_{2.5}$, and approaches for reducing emissions through improved monitoring techniques.

Section IV addresses the various statutory requirements and executive orders applicable to this rule. The final section contains proposed regulatory text for implementation of the $PM_{2.5}$ NAAQS, in the form of a proposed subpart Y amending 40 CFR part 51.

Public Hearing

The EPA will hold one public hearing on today's proposal during the comment period. The details of the public hearing, including the time, date, and location will be provided in a future **Federal Register** notice and announced on EPA's $PM_{2.5}$ implementation Web site at *http://www.epa.gov/ttn/naaqs/pm/pm25_index.html.*

The public hearing will provide interested parties the opportunity to present data, views, or arguments concerning the proposed rule. The EPA may ask clarifying questions during the oral presentations, but will not respond to the presentations or comments at that time. Written statements and supporting information submitted during the comment period will be considered with the same weight as any oral comments and supporting information presented at a public hearing.

How Can I Get Copies of This Document and Other Related Information?

Docket. The EPA has established an official public docket for this action under Docket ID No. OAR–2003–0062. The official public docket consists of the documents specifically referenced in this action, any public comments received, and other information related to this action. Although a part of the official docket, the public docket does not include Confidential Business Information (CBI) or other information whose disclosure is restricted by statute. The official public docket is the collection of materials that is available

for public viewing at the Air Docket in the EPA Docket Center, (EPA/DC) EPA West, Room B102, 1301 Constitution Ave., NW., Washington, DC. The EPA Docket Center Public Reading Room is open from 8:30 a.m. to 4:30 p.m., Monday through Friday, excluding legal holidays. The telephone number for the Public Reading Room is (202) 566–1744, and the telephone number for the Air Docket is (202) 566–1742. A reasonable fee may be charged for copying.

Electronic Access. You may access this **Federal Register** document electronically through the EPA Internet under the ''Federal Register'' listings at *http://www.epa.gov/fedrgstr/.*

An electronic version of the public docket is available through EPA's electronic public docket and comment system, EPA Dockets. You may use EPA Dockets at *http://www.epa.gov/edocket/* to submit or view public comments, access the index listing of the contents of the official public docket, and to access those documents in the public docket that are available electronically. Once in the system, select ''search,'' then key in the appropriate docket identification number.

Certain types of information will not be placed in the EPA Dockets. Information claimed as CBI and other information whose disclosure is restricted by statute, which is not included in the official public docket, will not be available for public viewing in EPA's electronic public docket. The EPA's policy is that copyrighted material will not be placed in EPA's electronic public docket but will be available only in printed, paper form in the official public docket. To the extent feasible, publicly available docket materials will be made available in EPA's electronic public docket. When a document is selected from the index list in EPA Dockets, the system will identify whether the document is available for viewing in EPA's electronic public docket. Although not all docket materials may be available electronically, you may still access any of the publicly available docket materials through the docket facility identified above. The EPA intends to work towards providing electronic access to all of the publicly available docket materials through EPA's electronic public docket.

For public commenters, it is important to note that EPA's policy is that public comments, whether submitted electronically or in paper, will be made available for public viewing in EPA's electronic public docket as EPA receives them and without change, unless the comment contains copyrighted material, CBI, or other information whose disclosure is restricted by statute. When EPA identifies a comment containing copyrighted material, EPA will provide a reference to that material in the version of the comment that is placed in EPA's electronic public docket. The entire printed comment, including the copyrighted material, will be available in the public docket.

Public comments submitted on computer disks that are mailed or delivered to the docket will be transferred to EPA's electronic public docket. Public comments that are mailed or delivered to the Docket will be scanned and placed in EPA's electronic public docket. Where practical, physical objects will be photographed, and the photograph will be placed in EPA's electronic public docket along with a brief description written by the docket staff.

For additional information about EPA's electronic public docket, visit EPA Dockets online or see 67 FR 38102; May 31, 2002.

How and To Whom Do I Submit Comments?

You may submit comments electronically, by mail, by facsimile, or through hand delivery/courier. To ensure proper receipt by EPA, identify the appropriate docket identification number, OAR–2003–0062, in the subject line on the first page of your comment. Please ensure that your comments are submitted within the specified comment period. Comments received after the close of the comment period will be marked ''late.'' The EPA is not required to consider these late comments. If you wish to submit CBI or information that is otherwise protected by statute, please follow the instructions below under, ''How Should I submit CBI to the Agency?'' Do not use EPA Dockets or e-mail to submit CBI or information protected by statute.

Electronically. If you submit an electronic comment as prescribed below, EPA recommends that you include your name, mailing address, and an e-mail address or other contact information in the body of your comment. Also include this contact information on the outside of any disk or CD ROM you submit, and in any cover letter accompanying the disk or CD ROM. This ensures that you can be identified as the submitter of the comment and allows EPA to contact you in case EPA cannot read your comment due to technical difficulties or needs further information on the substance of your comment. The EPA's policy is that EPA will not edit your comment, and any identifying or contact information provided in the body of a comment will be included as part of the comment that is placed in the official public docket, and made available in EPA's electronic public docket. If EPA cannot read your comment due to technical difficulties and cannot contact you for clarification, EPA may not be able to consider your comment.

EPA Dockets. Your use of EPA's electronic public docket to submit comments to EPA electronically is EPA's preferred method for receiving comments. Go directly to EPA Dockets at *http://www.epa.gov/edocket,* and follow the online instructions for submitting comments. To access EPA's electronic public docket from the EPA Internet Home Page, select ''Information Sources,'' ''Dockets,'' and ''EPA Dockets.'' Once in the system, select ''search,'' and then key in Docket ID No. OAR–2003–0062. The system is an ''anonymous access'' system, which means EPA will not know your identity, e-mail address, or other contact information unless you provide it in the body of your comment.

Electronic mail. Comments may be sent by e-mail to *A-and-R-Docket@epa.gov,* Attention Docket ID No. OAR–2003–0062. In contrast to EPA's electronic public docket, EPA's e-mail system is not an ''anonymous access'' system. If you send an e-mail comment directly to the Docket without going through EPA's electronic public docket, EPA's e-mail system automatically captures your e-mail address. The e-mail addresses that are automatically captured by EPA's e-mail system are included as part of the comment that is placed in the official public docket, and made available in EPA's electronic public docket.

Disk or CD ROM. You may submit comments on a disk or CD ROM that you mail to the mailing address identified under Docket above. These electronic submissions will be accepted in WordPerfect or ASCII file format. Avoid the use of special characters and any form of encryption.

By Mail. Send your comments to Air Docket (in duplicate if possible), Environmental Protection Agency, Mail code: 6102T, 1200 Pennsylvania Ave., NW., Washington, DC, 20460, Attention Docket ID No. OAR–2003–0062.

By Hand Delivery or Courier. Deliver your comments to: Air Docket, Environmental Protection Agency, 1301 Constitution Avenue, NW., Room B108, Mail code: 6102T, Washington, DC 20004, Attention Docket ID No. OAR–2003–0062. Such deliveries are only accepted during the Docket's normal hours of operation as identified above under Docket.

By Facsimile. Fax your comments to (202) 566–1741, Attention Docket ID. No. OAR–2003–0062.

How Should I Submit CBI to the Agency?

Do not submit information that you consider to be CBI electronically through EPA's electronic public docket or by e-mail. Send or deliver information identified as CBI only to the following address: Roberto Morales, U.S. EPA, Office of Air Quality Planning and Standards, Mail Code C404–02, Research Triangle Park, NC 27711, telephone (919) 541–0880, e-mail at *morales.roberto@epa.gov,* Attention Docket ID No. OAR–2003–0062. You may claim information that you submit to EPA as CBI by marking any part or all of that information as CBI (if you submit CBI on disk or CD ROM, mark the outside of the disk or CD ROM as CBI and then identify electronically within the disk or CD ROM the specific information that is CBI). Information so marked will not be disclosed except in accordance with procedures set forth in 40 CFR part 2.

In addition to one complete version of the comment that includes any information claimed as CBI, a copy of the comment that does not contain the information claimed as CBI must be submitted for inclusion in the public docket and EPA's electronic public docket. If you submit the copy that does not contain CBI on disk or CD ROM, mark the outside of the disk or CD ROM clearly that it does not contain CBI. Information not marked as CBI will be included in the public docket and EPA's electronic public docket without prior notice. If you have any questions about CBI or the procedures for claiming CBI, please consult the person identified in the **FOR FURTHER INFORMATION CONTACT** section.

What Should I consider as I Prepare My Comments for EPA?

You may find the following suggestions helpful for preparing your comments:

1. Explain your views as clearly as possible.

2. Describe any assumptions that you used.

3. Provide any technical information and/or data you used that support your views.

4. If you estimate potential burden or costs, explain how you arrived at your estimate.

5. Provide specific examples to illustrate your concerns.

6. Offer alternatives.

7. Make sure to submit your comments by the comment period deadline identified.

8. To ensure proper receipt by EPA, identify the appropriate docket identification number in the subject line on the first page of your response. It would also be helpful if you provided the name, date, and **Federal Register** citation related to your comments.

Timing

In a number of places, this document refers to time periods (e.g., x number of years) after designation or after the designation date. By this, we mean the number of years after the effective date of $PM_{2.5}$ designations (April 5, 2005).

Table of Contents

I. What Is the $PM_{2.5}$ Problem and EPA's Strategy for Addressing It?
A. What are the fine particle standards and the health effects they address?
B. What is the legal history of the $PM_{2.5}$ standards?
C. What was the process for designating $PM_{2.5}$ attainment and nonattainment areas?
D. What is the geographic extent of the $PM_{2.5}$ problem?
E. What is EPA's overall strategy for reducing $PM_{2.5}$ pollution?
1. The State implementation plan (SIP) system
2. National rules
II. Fine Particles: Overview of Atmospheric Chemistry, Sources of Emissions, and Ambient Monitoring Data
A. Introduction
B. Concentration, composition and sources of fine PM
C. The role of ammonia in sulfate, nitrate & secondary organic aerosol formation
D. Regional patterns of carbon, sulfate and nitrate, and indications of transport
E. Policy for addressing $PM_{2.5}$ precursors
1. Legal Authority to Regulate Precursors
2. Proposed policy options for addressing $PM_{2.5}$ precursors in nonattainment plan programs.
III. What Are the Specific Elements of EPA's $PM_{2.5}$ Implementation Program?
A. What classification options are under consideration for $PM_{2.5}$ nonattainment areas?
1. Background
2. Proposed options for $PM_{2.5}$ classifications
a. No classification system based on design values
b. Two-tiered classification system
c. Rural transport classification
B. When are $PM_{2.5}$ attainment demonstrations and SIPs due, and what requirements must they address?
C. What are the attainment dates for $PM_{2.5}$ nonattainment areas?
1. Background
2. Consideration of existing measures in proposing an attainment date
3. Areas may qualify for two 1-year attainment date extensions
4. Areas may submit a SIP demonstrating that it is impracticable to attain by the 5-year attainment date
5. Areas that fail to attain or do not qualify for an attainment date extension
6. Determining attainment for the $PM_{2.5}$ standards
7. How do attainment dates apply to Indian country?
D. What are the incentives for achieving early reductions of $PM_{2.5}$ and its precursors?
E. How should the States and EPA balance the need to address long-range transport of fine particle pollution with the need for local emissions reductions when implementing the $PM_{2.5}$ standards?
1. Clean Air Act provisions for achieving local and regional emissions reductions
2. Regional emission reduction strategies
3. The role of local and State emission reduction efforts in reducing health risks and achieving the $PM_{2.5}$ standards
4. Addressing regionally transported emissions in local area attainment demonstrations
F. How will EPA address requirements for modeling and attainment demonstration SIPs when implementing the 24-hour and annual average $PM_{2.5}$ standards?
1. Introduction
2. Areas that need to conduct modeling
3. Modeling guidance
4. Modeled attainment test
5. Multi-pollutant assessments and one-atmosphere modeling
6. Which future year(s) should be modeled?
7. Mid-course review
G. What requirements for RFP apply under the $PM_{2.5}$ implementation program?
1. Background
2. What is the baseline year from which States will track emission reductions for meeting RFP requirements?
3. How does EPA propose to address the pollutants associated with $PM_{2.5}$ in these RFP requirements?
4. What areas must submit an RFP plan?
a. Areas projected to attain within 5 years of designation
b. Areas projected to attain more than 5 years from the date of designation must submit a 2008 RFP plan
i. For purposes of the 2008 RFP plan, how should a nonattainment area define its emission reduction milestones?
ii. For what pollutants must States reduce emissions?
iii. How should States assess the equivalence of alternative combinations of pollutant emissions reductions?
iv. How would RFP be evaluated for a sample 2008 RFP plan?
v. What potential RFP requirements could apply for ''serious'' areas under the two-tiered classification option?
5. Other RFP issues
a. How should States account for regional control strategies in evaluating RFP?
b. What geographic area should States address in RFP plans?
c. How should RFP be addressed in multi-state nonattainment areas?
d. How should States compile emission inventories for RFP plans?

e. What RFP requirements apply in Tribal areas?
f. What must States submit to show whether they have met RFP milestones?
H. What requirements for contingency measures should apply under the $PM_{2.5}$ implementation program?
I. What requirements should apply for RACM and RACT for $PM_{2.5}$ nonattainment areas?
1. General background
2. Background for RACT
3. Emissions inventory analysis supporting RACT options
4. Which $PM_{2.5}$ precursors must be addressed by States in establishing RACT requirements?
5. What are the proposed options for implementing the RACT requirement?
6. What factors should States consider in determining whether an available control technology is technically feasible?
7. What factors should States consider in determining whether an available control technology is economically feasible?
8. How should condensable emissions be treated in RACT determinations?
9. What are the required dates for submission and implementation of RACT measures?
10. Under the $PM_{2.5}$ implementation program, does a State need to conduct a RACT determination for an applicable source that already has a RACT determination in effect?
11. What policies affect compliance with RACT for electric generating units?
12. Is EPA developing $PM_{2.5}$ controlled technique guidelines?
13. Background for RACM
14. What is the proposed approach for implementing RACM?
15. What factors should States consider in determining whether control measures are reasonably available?
16. What specific source categories and control measures should a State evaluate when determining RACM for a nonattainment area?
17. What criteria should be met to ensure effective regulations or permits to implement RACT and RACM?
J. What guidance is available to States and Tribes for implementing innovative programs to address the $PM_{2.5}$ problem?
K. What aspects of transportation conformity and the $PM_{2.5}$ standard are addressed in this proposal?
1. What is transportation conformity?
2. Why does transportation conformity apply to $PM_{2.5}$?
3. Why is EPA discussing transportation conformity in this proposal?
4. What revisions have been made to the transportation conformity rule to address the $PM_{2.5}$ standard?
5. Does EPA plan to revoke the PM_{10} standard?
6. Will some areas be demonstrating conformity for both PM_{10} and $PM_{2.5}$ at the same time?
7. When does transportation conformity apply to $PM_{2.5}$ nonattainment areas?
8. How does the 1-year grace period apply in metropolitan areas?
9. How does the 1-year grace period apply in ''donut'' areas?
10. How does the 1-year grace period apply in isolated rural areas?
L. What requirements for general conformity should apply to the $PM_{2.5}$ standards?
1. What is the purpose of the general conformity regulations?
2. How is the general conformity program currently structured?
3. Who runs the general conformity program?
4. How does an agency demonstrate conformity?
5. General conformity regulation revisions for the $PM_{2.5}$ standards
a. What *de minimis* emission levels will be set for pollutants that contribute to $PM_{2.5}$ concentrations?
b. What impact will the implementation of the $PM_{2.5}$ standards have on a State's general conformity SIP?
c. Are there any other impacts on the SIPs related to general conformity based on implementation of the $PM_{2.5}$ standards?
6. Is there a 1-year grace period which applies to general conformity determinations for the purposes of the $PM_{2.5}$ standards?
M. How will the NSR program address $PM_{2.5}$ and its precursors?
1. Background
2. What are the principal elements of the proposed major NSR program for $PM_{2.5}$?
3. Should precursors to the formation of ambient concentrations of $PM_{2.5}$ be subject to regulation under NSR?
a. Background
b. Should NSR cover precursor emissions in addition to direct emissions of $PM_{2.5}$?
4. What is a major stationary source (major source) under the major NSR program for $PM_{2.5}$?
a. Background
b. Proposed option
c. What is the effect of this proposed option?
5. What should the significant emissions rate be for direct emissions of $PM_{2.5}$?
a. Background
b. Proposed options
6. What should be the significant emissions rates for $PM_{2.5}$ precursors?
a. Background
b. Proposed options
7. What is the role of condensible emissions in determining major NSR applicability?
8. What are the requirements of the Prevention of Significant Deterioration (PSD) program for attainment areas?
9. How should BACT be implemented?
10. What is EPA's plan for preventing significant deterioration of air quality for $PM_{2.5}$?
11. How will the air quality analysis required under section 165(a)(3) be implemented?
12. How should the PSD pre-construction monitoring requirement be implemented for $PM_{2.5}$?
a. Background
b. Options for PSD preconstruction monitoring
13. Nonattainment New Source Review (NA NSR) requirements
14. What are the offset requirements for NA NSR?
a. What is the required offset ratio for $PM_{2.5}$ direct emissions?
b. Which precursors shall be subject to the offset requirement?
c. What is the required offset ratio for $PM_{2.5}$ precursors?
d. Should EPA allow interprecursor trading to comply with the offset requirement?
15. What are the implementation and transition issues associated with this rule?
16. Implementation of PSD provisions during the SIP Development period
a. Background
b. Proposed options
c. Rationale
17. Implementation of the nonattainment NSR provisions during the SIP development period
a. Background
b. Implementation of NSR under the Emissions Offset Interpretative Ruling (40 CFR part 51, Appendix S) with revisions.
c. Legal basis for requiring States to issue nonattainment NSR permits during the SIP-development period
18. NSR applicability to precursors during the interim period
19. Are there any Tribal concerns?
20. What must a State or local agency do about minor sources of $PM_{2.5}$?
21. Supplemental program option: rural transport areas
a. What flexible implementation options should be available for Transport areas?
b. Which nonattainment areas would be eligible for the transport program?
c. What would be the basic requirements of a transport nonattainment NSR program?
N. How will EPA ensure that the 8-hour ozone standard will be implemented in a way which allows an optimal mix of controls for $PM_{2.5}$, ozone, and regional haze?
1. Could an area's $PM_{2.5}$ strategy affect its 8-hour ozone and/or regional haze strategy?
2. What guidance has EPA provided regarding ozone, $PM_{2.5}$ and regional haze interaction?
3. What is EPA proposing?
O. What emission inventory requirements should apply under the $PM_{2.5}$ NAAQS?
P. What stationary source test methods should States use under the $PM_{2.5}$ implementation program?
1. Will the existing stationary source test methods for particulate matter (PM) be acceptable for use in $PM_{2.5}$ SIPs?
2. Why are the existing stationary source test methods for PM deficient?
3. If the stationary source test methods are changed, will the existing emission limitations incorporated in SIPs need to be changed?
4. The existing PM test methods and the emission limits based upon these methods have been acceptable since 1971, why do they need to be changed for $PM_{2.5}$?
5. What methods are available for measuring PM size and condensable PM from stationary sources?
6. Why is a new dilution-based test method being developed by EPA?

7. What types of sources should use the new dilution-based test method?
8. What are the main features of the new test method?
9. What is the schedule for finalization of the new test method?
10. How will use of this new method affect an areas emissions inventory and the emissions inventory for individual sources?
11. How will use of this new method affect a State's implementation program more broadly?
Q. How can potentially inadequate source monitoring in certain SIP rules be improved?
1. How does improved $PM_{2.5}$ monitoring relate to title V monitoring?
2. Are instrumental techniques more appropriate than visual emissions (VE) techniques for monitoring compliance with PM emissions limits, for some situations and applications?
3. What constitutes improved monitoring?
R. What guidance should be provided that is specific to Tribes?
S. Are there any additional requirements related to enforcement and compliance?
T. What requirements should apply to emergency episodes?
U. What ambient monitoring requirements will apply under the $PM_{2.5}$ NAAQS?
IV. Statutory and Executive Order Reviews
A. Executive Order 12866: Regulatory Planning and Review
B. Paperwork Reduction Act
C. Regulatory Flexibility Act
D. Unfunded Mandates Reform Act
E. Executive Order 13132: Federalism
F. Executive Order 13175: Consultation and Coordination with Indian Tribal Governments
G. Executive Order 13045: Protection of Children from Environmental Health and Safety Risks
H. Executive Order 13211: Actions That Significantly Affect Energy Supply, Distribution, or Use
I. National Technology Transfer Advancement Act
J. Executive Order 12898: Federal Actions to Address Environmental Justice in Minority Populations and Low-Income Populations

I. What Is the $PM_{2.5}$ Problem and EPA's Strategy for Addressing It?

A. What Are the Fine Particle Standards and the Health Effects They Address?

Fine particles in the atmosphere are made up of a complex mixture of components. Common constituents include: Sulfate (SO_4); nitrate (NO_3); ammonium; elemental carbon; a great variety of organic compounds; and inorganic material (including metals, dust, sea salt, and other trace elements) generally referred to as ''crustal'' material, although it may contain material from other sources. Airborne particulate matter (PM) with a nominal aerodynamic diameter of 2.5 micrometers or less (a micrometer is one-millionth of a meter, and 2.5 micrometers is less than one-seventh the average width of a human hair) are considered to be ''fine particles,'' and are also known as $PM_{2.5}$. ''Primary'' particles are emitted directly into the air as a solid or liquid particle (*e.g.*, elemental carbon from diesel engines or fire activities, or condensable organic particles from gasoline engines). ''Secondary'' particles (*e.g.*, sulfate and nitrate) form in the atmosphere as a result of various chemical reactions. (See section II for a more detailed technical discussion on $PM_{2.5}$, its precursors, formation processes, and emissions sources.)

The health effects associated with exposure to $PM_{2.5}$ are significant. Epidemiological studies have shown a significant correlation between elevated $PM_{2.5}$ levels and premature mortality. Other important effects associated with $PM_{2.5}$ exposure include aggravation of respiratory and cardiovascular disease (as indicated by increased hospital admissions, emergency room visits, absences from school or work, and restricted activity days), lung disease, decreased lung function, asthma attacks, and certain cardiovascular problems. Individuals particularly sensitive to $PM_{2.5}$ exposure include older adults, people with heart and lung disease, and children. On July 18, 1997, we revised the NAAQS for particulate matter to add new standards for fine particles, using $PM_{2.5}$ as the indicator. We established health-based (primary) annual and 24-hour standards for $PM_{2.5}$ (62 FR 38652).[1] The annual standard is a level of 15 micrograms per cubic meter, based on the 3-year average of annual mean $PM_{2.5}$ concentrations. The 24-hour standard is a level of 65 micrograms per cubic meter, based on the 3-year average of the 98th percentile of 24-hour concentrations. The EPA established the standards based on significant evidence and numerous health studies demonstrating that serious health effects are associated with exposures to elevated levels of $PM_{2.5}$. Estimates show that attainment of the $PM_{2.5}$ standards would be likely to result in tens of thousands fewer premature deaths each year, would be likely to prevent tens of thousands of hospital admissions each year, and would be likely to prevent hundreds of thousands of doctor visits, absences from work and school, and respiratory illnesses in children annually. The research on which EPA based the 1997 standards did not identify a specific threshold concentration below which individuals have no PM-related health effects, meaning that emissions reductions resulting in reduced concentrations below the level of the standards may continue to provide additional health benefits to the local population.[2] At the time we established the primary standards in 1997, we also established welfare-based (secondary) standards identical to the primary standards. The secondary standards are designed to protect against major environmental effects of $PM_{2.5}$ such as visibility impairment, soiling, and materials damage. The EPA also established the regional haze regulations in 1999 for the improvement of visual air quality in national parks and wilderness areas across the country. Because regional haze is caused primarily by light scattering and light absorption by fine particles in the atmosphere, EPA is encouraging the States to integrate their efforts to attain the $PM_{2.5}$ standards with those efforts to establish reasonable progress goals and associated emission reduction strategies for the purposes of improving air quality in our treasured natural areas under the regional haze program.

The scientific assessment that resulted in the establishment of the $PM_{2.5}$ standards included a scientific peer review and public comment process. We developed scientific background documents based on the review of hundreds of peer-reviewed scientific studies. The Clean Air Scientific Advisory Committee, a congressionally mandated group of independent scientific and technical experts, provided extensive review of these assessments, and found that EPA's review of the science provided an adequate basis for the EPA Administrator to make a decision. More detailed information on health effects of $PM_{2.5}$ can be found on EPA's Web site at: *http://www.epa.gov/air/urbanair/pm/index.html.* Additional information on EPA's scientific assessment documents supporting the 1997 standards is available at: *http://www.epa.gov/ttn/oarpg* (see headings for ''Staff Papers'' and ''Criteria Documents'').

[1] In the 1997 PM NAAQS revision, EPA also revised the standard for particles with a nominal aerodynamic diameter of 10 micrometers or less (also known as PM_{10}). The original PM_{10} standard was established in 1987. The revised PM_{10} standard was later vacated by the court, and thus the 1987 PM_{10} standard remains in effect. Today's proposed implementation rule and guidance does not address PM_{10}.

[2] Environmental Protection Agency. (1996) Air Quality Criteria for Particulate Matter. Research Triangle Park, NC: National Center for Environmental Assessment-RTP Office; report no. EPA/600/P–95/001aF-cF. 3v.

B. What Is the Legal History of the $PM_{2.5}$ Standards?

After EPA promulgated the $PM_{2.5}$ and 8-hour ozone standards in July 1997, several industry organizations and State governments challenged EPA's action in the U.S. Court of Appeals for the District of Columbia Circuit (the DC Circuit). This action initiated a long legal process, ending with a March 2002 decision by the DC Circuit upholding the standards and the authority on which they were established.

On May 14, 1999, the three-judge panel of the DC Circuit held in a split decision that the CAA, as applied by EPA in setting the 1997 standards for PM and ozone, was unconstitutional as an improper delegation of legislative authority to EPA. The ruling did not question the science or decision-making process used to establish the standards. The Court remanded the $PM_{2.5}$ standards to EPA but did not vacate them. In June 1999, the Department of Justice (DOJ) and EPA petitioned the Court for a rehearing en banc with the entire DC Circuit Court. On October 29, 1999, the Court denied the petition for rehearing.

The DOJ and EPA then filed a petition for certiorari with the United States Supreme Court in December 1999 to appeal the decision of the DC Circuit, and the Supreme Court issued its decision to hear the appeal in November 2000. The Supreme Court issued its decision on the merits of the appeal on February 27, 2001.[3] In that decision, the Supreme Court held that EPA's approach to setting the NAAQS in accordance with the CAA did not constitute an unconstitutional delegation of authority. The Supreme Court unanimously affirmed the constitutionality of the CAA provision that authorizes the Agency to set national air quality standards, stating that this provision ''fits comfortably within the scope of discretion permitted by our precedent.'' The Supreme Court also affirmed that the CAA requires EPA to set standards at levels necessary to protect the public health and welfare, without considering the economic costs of implementing the standards. The Supreme Court remanded several other issues back to the DC Circuit, including the issue of whether EPA acted arbitrarily and capriciously in establishing the specific levels of the standards.

The DC Circuit heard arguments in this remanded case in December 2001, and issued its decision on March 26, 2002. The DC Circuit found that the Agency had ''engaged in reasoned decision making,'' rejecting the claim that the Agency had acted arbitrarily and capriciously in setting the levels of the standards. This last decision by the DC Circuit gave EPA a clear path to move forward with implementation of the $PM_{2.5}$ standards.

The implementation rule we are proposing today provides specific requirements for State, local, and Tribal[4] air pollution control agencies to address as they prepare implementation plans required by the CAA to attain and maintain the $PM_{2.5}$ standards.[5] Each State with an area that is not attaining the $PM_{2.5}$ NAAQS will have to develop, as part of its State implementation plan (SIP), emission limits for appropriate sources and other requirements to attain the NAAQS within the timeframes set forth in the CAA.[6] Tribes with jurisdiction over Indian country that is not attaining the $PM_{2.5}$ NAAQS could voluntarily submit a Tribal implementation plan (TIP) but are not required to do so. However, in cases where Tribes elect not to submit a TIP, EPA, working with the Tribes, has the responsibility for developing an implementation plan in those areas.

C. What Was the Process for Designating $PM_{2.5}$ Attainment and Nonattainment Areas?

We issued guidance in April 2003[7] and February 2004[8] on the process for designating attainment and nonattainment areas for $PM_{2.5}$ and on factors for States and Tribes to consider in defining boundaries for nonattainment areas. The guidance states that EPA believes the presumptive boundaries for nonattainment areas should be equal to the 1999 Office of Management and Budget (OMB) definitions of the combined metropolitan statistical area, where applicable, or the metropolitan statistical area. We also recognized the fact that in June 2003, OMB released updated definitions of combined statistical areas and core-based statistical areas. We communicated to the States and Tribes that in evaluating potential nonattainment area boundaries, they should include any additional counties that were added in 2003 to the 1999 metro area definitions, plus adjacent counties, in their review of data associated with the nine technical factors discussed in EPA guidance.

States were required to submit their recommendations to EPA by February 15, 2004.[9] Tribes were encouraged, but not required, to submit designation recommendations to EPA for their reservations or other areas under their jurisdiction. In general, the recommendations were based on the most recent 3 years of air quality data available (e.g. 2001–2003). On June 29, we sent letters to the Governors and Tribal leaders notifying them of any modifications we intended to make to their recommendations. After considering additional comments and information from States and Tribes, EPA issues final $PM_{2.5}$ designations on December 17, 2004. They were published in the **Federal Register** on January 5, 2005 (70 FR 944).

The nonattainment designation for an area starts the process whereby a State or Tribe must develop an implementation plan that includes, among other things, a demonstration showing how it will attain the ambient standards by the attainment dates required in the CAA. Under section 172(b), States have up to 3 years after EPA's final designations to submit their SIPs to EPA. These SIPs will be due in April 2008, three years from the effective date of the designations.

D. What Is the Geographic Extent of the $PM_{2.5}$ Problem?

The $PM_{2.5}$ ambient air quality monitoring data for the 2001–2003 period suggest that areas violating the standards are located across much of the eastern half of the United States and in much of central and southern California.

[3] *Whitman* v. *American Trucking Assoc.,* 121 S.Ct. 903, 911–914 (2001) (Whitman).

[4] The 1998 Tribal Authority Rule (TAR) (40 CFR part 49), which implements section 301(d) of the CAA, provides for Tribes to be treated in the same manner as a State in implementing sections of the CAA. It gives Tribes the option of developing tribal implementation plans (TIPs), but unlike States, Tribes are not required to develop implementation plans. See section III.Q. for further discussion of Tribal issues.

[5] When the term ''State'' is used hereafter, it will refer to States, local air agencies, and Tribal governments electing to be treated as States for the purposes of implementing the CAA.

[6] The CAA requires EPA to set ambient air quality standards and requires States to submit plans designed to attain those standards.

[7] See ''Designations for the Fine Particle National Ambient Air Quality Standard,'' memorandum from Jeffrey R. Holmstead, Assistant Administrator, to EPA Regional Administrators, April 1, 2003. Available at: *http://www.epa.gov/pmdesignations/guidance.htm.*

[8] See ''Additional Guidance on Defining Area Boundaries for $PM_{2.5}$ Designations,'' memorandum from Lydia N. Wegman, Director of Air Quality Strategies and Standards Division, EPA Office of Air Quality Planning and Standards, to EPA Air Division Directors, February 12, 2004. Available at: *http://www.epa.gov/pmdesignations/guidance.htm.*

[9] The Consolidated Appropriations Bill for FY2004 (Pub. L. 108–199), signed by President Bush on January 23, 2004, codifies the required State submittal date (February 15, 2004) and the date for EPA to finalize $PM_{2.5}$ designations (December 31, 2004) that were originally included in EPA's April 2003 guidance on $PM_{2.5}$ designations.

A total of 47 areas comprised of 224 counties and the District of Columbia were designated as nonattainment in December 2004. In April 2005, EPA issued a supplemental notice which changed the designation status of eight areas (with 17 counties) from nonattainment to attainment based on newly updated 2002–2004 air quality data. In addition, four areas previously designated as unclassifiable were changed to attainment in this notice.

The population of the 39 $PM_{2.5}$ nonattainment areas is significant—about 90 million, or more than 30% of the U.S. population. Most areas violate only the annual standard, but a few violate both the annual and 24-hour standards. The 2001–2003 data show that no area violates just the 24-hour standard.[10]

The distribution of the 2001–2003 design values[11] for the 39 nonattainment areas is shown in the table below:

Design value range for $PM_{2.5}$ nonattainment areas (in µg/m3)	Number of areas	Percent of all areas (percent)
15.1–16.0	10	26
16.1–17.0	12	31
17.1–18.0	12	31
18.1–19.0	1	3
19.1 +	4	10
Total	39	100

More than 40% of the nonattainment areas, including many major metropolitan areas, have design values that are 2 µg/m^3 or more above the annual standard.

The EPA believes the $PM_{2.5}$ problem has a substantial regional component because the formation and transport of secondarily formed particles, such as sulfates and nitrates, extends over hundreds of miles. The regional nature of $PM_{2.5}$ is in contrast to the more localized nature of PM_{10}.

In addition, data suggests that ambient $PM_{2.5}$ concentrations tend to rise and fall in a consistent manner across very large geographic areas. The transport phenomena associated with $PM_{2.5}$ and its precursors has been well-documented for many years. For example, one significant source of information on long-range transport is the National Acid Precipitation Assessment Program (NAPAP) research from the 1980's and its associated reports published in 1991.[12] Additional studies and air quality modeling analyses since that time have added to the body of information documenting the regional nature of $PM_{2.5}$.[13] Since the emissions from one State may contribute significantly to $PM_{2.5}$ violations in several other States, we believe that plans to attain the $PM_{2.5}$ standards will need to include a combination of national, regional, and local emission reduction strategies.

E. What Is EPA's Overall Strategy for Reducing $PM_{2.5}$ Pollution?

Our overall strategy for achieving the $PM_{2.5}$ standards is based on the structure outlined in the CAA. The CAA outlines important roles for State and Tribal governments and for EPA in implementing national ambient air quality standards.

States have primary responsibility for developing and implementing SIPs that contain local and in-State measures needed to achieve the air quality standards in each area. We assist States and Tribes by providing technical tools, assistance and guidance, including information on control measures. In addition, we set national emissions limits for some sources such as new motor vehicles, certain categories of major new sources, and existing stationary sources of toxic air pollutants. Where upwind sources (such as coal-fired power plants) contribute to downwind problems in other States or Tribes, we can also ensure that the upwind States address these contributing emissions, or we can put in place Federal regulations in situations where the upwind States fail to address these sources. We intend to work closely with States and Tribes to use an appropriate combination of national, regional, and local pollution reduction measures to meet the standards as expeditiously as practicable, as required by the CAA.

1. The State Implementation Plan (SIP) System

A SIP is the compilation of regulations and programs that a State uses to carry out its responsibilities under the CAA, including the attainment, maintenance, and enforcement of NAAQS. (Only certain air quality programs and regulations implemented by States are required to be part of the SIP, however.) States use the SIP process to identify the emissions sources that contribute to the nonattainment problem in a particular area, and to select the emissions reduction measures most appropriate for that area, considering technical and economic feasibility, and a variety of local factors such as population exposure, enforceability, and economic impact. Under the CAA, SIPs must ensure that areas reach attainment as expeditiously as practicable. These plans need to take into consideration emission reductions resulting from national programs (such as mobile source regulations, the acid rain program, or maximum achievable control technology (MACT) standards for air toxics) as well as from State or local programs not directly mandated under the CAA.

The SIP system for nonattainment areas is an important component of the CAA's overall strategy for meeting the $PM_{2.5}$ standards, but it is not the only component. As noted below, the CAA also includes requirements for national rules or programs that will reduce emissions and help achieve cleaner air.

2. National Rules

For the States to be successful in developing local plans showing attainment of standards, we must do our part to develop standards and programs to reduce emissions from sources that are more effectively and efficiently addressed at the national level. We also have the responsibility to ensure that interstate transport is addressed through SIPs or other means. As outlined below, we have issued final regulations that will achieve important emissions reductions from power plants, onroad and nonroad engine sources, and other sources that may enable some areas to meet the $PM_{2.5}$ standards in the near term and make it easier for others to attain.

The acid rain program, authorized under title IV of the 1990 CAA amendments, was projected to reduce annual SO_2 emissions by 10 million tons from 1980 levels by 2010, and to reduce annual NO_X emissions by 2 million tons from 1980 levels by 2010. The EPA has implemented the acid rain

[10] A listing of counties and associated $PM_{2.5}$ 3-year annual average concentrations, or ''design values,'' is available on EPA's Web site at: *http://www.epa.gov/airtrends/values.html.*

[11] The $PM_{2.5}$ design value for a nonattainment area is the highest of the 3-year average concentrations calculated for the monitors in the area, in accordance with 40 CFR part 50, appendix N.

[12] National Acid Precipitation Assessment Program. Acid Deposition: State of the Science and Technology. Washington, DC. 1991. See also: Environmental Protection Agency. (2004) Air Quality Criteria for Particulate Matter. Research Triangle Park, NC: Office of Research and Development; report no. EPA/600/P–99/002a,bF. October. The 2004 PM criteria document is available at: *http://www.epa.gov/ttn/naaqs/standards/pm/s_pm_cr_cd.html.*

[13] NARSTO (2004) Particulate Matter Assessment for Policy Makers: A NARSTO Assessment. P. McMurry, M. Shepherd, and J. Vickery, eds. Cambridge University Press, Cambridge, England. ISBN 0 52 184287 5. For more information, see *http://www.cgenv.com/NARSTO.* See also supporting technical information for the Clear Skies Act, *http://www.epa.gov/clearskies/,* and for the Clean Air Interstate Rule, *http://www.epa.gov/cleanairinterstaterule.*

program in two phases: Phase I for SO_2 began in 1995 and targeted the largest and highest-emitting coal-fired power plants. Phase I for NO_X began in 1996. Phase II for both pollutants began in 2000 and sets restrictions on Phase I plants as well as many additional smaller coal-, gas-, and oil-fired plants. Over 2,000 sources (mostly electricity generating facilities) are now affected by the Acid Rain Program. The acid rain emissions trading system had a cap of 8.95 million tons on the total amount of SO_2 that may be emitted by power plants nationwide, about half the amount emitted in 1980. Sulfate particles formed from SO_2 emissions and nitrate particles formed from NO_X emissions contribute significantly to total $PM_{2.5}$ mass in the eastern U.S. (ranging from 30–50 percent), so the reductions already achieved under the Acid Rain Program have led to improvements in $PM_{2.5}$ concentrations across the region.

Additional reductions in NO_X emissions from power plants and large industrial sources were required by May 2004 under our rules to reduce interstate transport of ozone pollution in the eastern U.S. These rules are known as the NO_X SIP Call, published October 27, 1998 (63 FR 57356), and the Section 126 Rule, published May 25, 1999 (64 FR 28250). We estimate that when fully implemented, this program will result in the reduction of more than one million tons of summertime NO_X. While this program was established primarily to address the ground-level ozone problem in the East, it will also result in reduced ambient levels of nitrate, one of the main components of $PM_{2.5}$.

The Administration has proposed nationwide legislation—the Clear Skies Act [14]—to address health and environmental concerns associated with power plant emissions of sulfur dioxide, nitrogen oxides, and mercury. However, because passage of the CSA legislation is not assured, EPA has established the Clean Air Interstate Rule (CAIR),[15] a regulatory approach to address interstate transport of pollution under section 110 of the CAA. Section 110 gives EPA the authority to require SIPs to ''prohibit * * * any source or other type of emission activity within the State from emitting any air pollutant in amounts which will contribute significantly to nonattainment in, or interfere with maintenance by, any other State with respect to'' any NAAQS, and to prohibit sources or emission activities from emitting pollutants in amounts which will interfere with measures required to be included in State plans to prevent significant deterioration of air quality or to protect visibility (such as the protection of 156 mandatory Federal class I areas under the regional haze rule [16]).

CAIR, issued by EPA on March 10, 2005, employs the same emissions trading approach used to achieve cost-effective emission reductions under the acid rain program. It outlines a two-phase program with declining power plant emissions caps for 28 eastern states and the District of Columbia: SO_2 caps of 3.6 million tons in 2010, and 2.5 million in 2015; NO_X caps of 1.5 in 2009 and 1.3 in 2015; and NO_X ozone season caps of 580,000 tons in 2009 and 480,000 tons in 2015. Emission caps are divided into State SO_2 and NO_X budgets. By the year 2015, the Clean Air Interstate Rule will result in:

—$85 to $100 billion in annual health benefits, annually preventing 17,000 premature deaths, millions of lost work and school days, and tens of thousands of non-fatal heart attacks and hospital admissions.

—Nearly $2 billion in annual visibility benefits in southeastern national parks, such as Great Smoky and Shenandoah.

—Significant regional reductions in sulfur and nitrogen deposition, reducing the number of acidic lakes and streams in the eastern U.S.

Current emissions standards for new cars, trucks and buses are reducing motor vehicle emissions of volatile organic compounds (VOCs, also referred to as hydrocarbons), NO_X, and direct PM emissions (such as elemental carbon) as older vehicles are retired and replaced. Other existing rules are reducing emissions from several categories of nonroad engines. The Tier 2 motor vehicle emission standards, together with the associated requirements to reduce sulfur in gasoline, will provide additional benefits nationally beginning in 2004.[17] When the new tailpipe and sulfur standards are fully implemented, Americans will benefit from the clean-air equivalent of removing 164 million cars from the road.

These new standards require passenger vehicles to have emissions 77 to 95 percent cleaner than those on the road today and reduce the sulfur content of gasoline by up to 90 percent. In addition, the 2001 heavy-duty diesel engine regulations [18] will lead to continued emissions reductions as older vehicles in that engine class are retired and fleets turn over. New emission standards will begin to take effect in model year 2007 and will apply to heavy-duty highway engines and vehicles. These standards are based on the use of high-efficiency catalytic exhaust emission control devices or comparably effective advanced technologies. Because these devices are damaged by sulfur, the level of sulfur in highway diesel fuel will be reduced by 97 percent by mid-2006. We project a 2.6 million ton reduction of NO_X emissions in 2030 when the current heavy-duty vehicle fleet is completely replaced with newer heavy-duty vehicles that comply with these emission standards. By 2030, we estimate that this program will reduce annual emissions of hydrocarbons by 115,000 tons and PM by 109,000 tons. These emissions reductions are on par with those that we anticipate from new passenger vehicles and low sulfur gasoline under the Tier 2 program.

EPA also finalized national rules in May 2004 to significantly reduce $PM_{2.5}$ and NO_X emissions from nonroad diesel-powered equipment.[19] These nonroad sources include construction, agricultural, and industrial equipment, and their emissions constitute an important fraction of the inventory for direct $PM_{2.5}$ emissions (such as elemental carbon and organic carbon), and NO_X. The EPA estimates that affected nonroad diesel engines currently account for about 44 percent of total diesel PM emissions and about 12 percent of total NO_X emissions from mobile sources nationwide. These proportions are even higher in some urban areas. The diesel emission standards will reduce emissions from this category by more than 90 percent, and are similar to the onroad engine requirements implemented for highway trucks and buses. Because the emission control devices can be damaged by sulfur, EPA also established requirements to reduce the allowable level of sulfur in nonroad diesel fuel by more than 99 percent by 2010. In 2030, when the full inventory of older nonroad engines has been replaced, the nonroad diesel program will annually prevent up to 12,000 premature deaths, one million lost work days, 15,000 heart attacks and 6,000 children's asthma-related emergency room visits.

[14] For more information on the proposed Clear Skies Act, see EPA's website: *http://www.epa.gov/clearskies/*.

[15] See *http://www.epa.gov/cair*.

[16] See 64 FR 35714, July 1, 1999.

[17] See Tier II emission standards at 65 FR 6698, February 10, 2000.

[18] See heavy-duty diesel engine regulations at 66 FR 5002, January 18, 2001.

[19] For more information on the proposed nonroad diesel engine standards, see EPA's website: *http://www.epa.gov/nonroad/*.

II. Fine Particles: Overview of Atmospheric Chemistry, Sources of Emissions, and Ambient Monitoring Data

A. Introduction

Particulate matter is a chemically and physically diverse mixture of discrete solid particles and liquid droplets. It exists in the air in a range of particle sizes, from submicrometer to more than 30 micrometers in size. The composition of particles varies throughout this range of sizes, depending on the age of the particle, the nature of the source of pollutant emissions, and the source's operating characteristics.

This regulation focuses on reducing ambient concentrations of the $PM_{2.5}$ size fraction of PM. The term $PM_{2.5}$ is used to describe the fraction of particles whose nominal aerodynamic diameter is less than or equal to 2.5 micrometers. $PM_{2.5}$ in the ambient air is defined operationally as the set of particles measured (and associated concentration) by the Federal Reference Method sampling device. Since the cut point of this sampling device is not perfectly sharp, some particles smaller than 2.5 micrometers are not retained and some particles larger than 2.5 micrometers are captured by sampling devices. This is important because there are two relevant modes to the PM size distribution, fine PM (nominally $PM_{2.5}$) and coarse PM (nominally from 2.5 to 10 micrometers aerodynamic diameter). These modes overlap slightly, but they are generally associated with distinctly different source types and formation processes.

Fine particles emitted directly into the air in a stable solid or liquid chemical form are referred to as ''primary'' particles. Particles formed near their source by condensation processes in the atmosphere are also considered to be primary particles. $PM_{2.5}$ that is formed by chemical reactions of gases in the atmosphere is considered to be ''secondarily'' formed particulate matter.

$PM_{2.5}$ in the atmosphere is composed of a complex mixture of constituents: Sulfate; nitrate; ammonium; particle-bound water; black carbon (also known as elemental carbon); a great variety of organic compounds; and miscellaneous inorganic material (sometimes called ''crustal material,'' which includes geogenic dust and metals). Atmospheric $PM_{2.5}$ also contains a large number of elements in various compounds and concentrations. Some organic materials such as pollen, spores, and plant detritus are also found in both the fine and coarse particle modes but from different sources or mechanisms. Crustal materials such as calcium, aluminum, silicon, magnesium, and iron are found predominately in coarse mode particles. Nitrate is generally found in the fine particle mode, but it is also found in the coarse mode particles, coming primarily from the reaction of gas-phase nitric acid with preexisting coarse particles.

Primary coarse particles are usually formed by mechanical processes. This includes material emitted from such sources as wind-blown dust, road dust, and particles formed by abrasion, crushing, and grinding. Some combustion-generated particles such as fly ash and soot also are found in the coarse mode. Primary $PM_{2.5}$ includes soot from diesel engines, a wide variety of organic compounds condensed from incomplete combustion or cooking operations, and compounds such as arsenic, selenium, and zinc that condense from vapor formed during combustion or smelting. The concentration of primary $PM_{2.5}$ in the air depends on source emission rates, transport and dispersion, and removal rate from the atmosphere.

Secondary PM is formed by chemical reactions of gas-phase precursors in the atmosphere. These reactions form condensable vapors that either form new particles or condense onto other particles in the air. Most of the sulfate and nitrate and a portion of the organic compounds in the atmosphere are formed by such chemical reactions. Secondary PM formation depends on numerous factors including the concentrations of precursors; the concentrations of other gaseous reactive species such as ozone, hydroxyl radicals, peroxy radicals, or hydrogen peroxide; atmospheric conditions including solar radiation, temperature, and relative humidity (RH); and the interactions of precursors and pre-existing particles with cloud or fog droplets or in the liquid film on solid particles. Several atmospheric aerosol species, such as ammonium nitrate and certain organic compounds, are semivolatile and are found in both gas and particle phases. Given the complexity of PM formation processes, new information from the scientific community continues to emerge to improve our understanding of the relationship between sources of PM precursors and secondary particle formation.

Certain particles, such as sulfates, nitrates, and certain organics, readily take up water and are considered to be hygroscopic. As a result of the equilibrium of water vapor with liquid water in hygroscopic particles, many ambient particles contain some amount of liquid water. When filter samples are weighed at lower relative humidity levels according to the $PM_{2.5}$ Federal reference method specifications, the filters are desiccated and much of this water is removed, but some particle-bound water will be measured as a component of the particle mass. Particle-bound water in the ambient air increases with higher relative humidities. This phenomenon is important because it affects the size of certain particles, and in turn, their properties of light scattering and aerodynamics. Differences in relative humidity can result in different measured particle size distributions, mass concentrations, and resulting visibility impairment levels. Regional emission reduction strategies to reduce $PM_{2.5}$, particularly hygroscopic particles such as sulfates and nitrates, should also provide significant visibility improvements, both in urban areas and in federal class I areas (national parks and wilderness areas).

The following discussion elaborates on the relationship between source types and the composition of $PM_{2.5}$. More information and references on the composition of PM may be found in the EPA 2004 PM Air Quality Criteria Document.[20]

B. Concentration, Composition and Sources of Fine PM

The relative contribution of $PM_{2.5}$ components varies significantly by region of the country. Data on $PM_{2.5}$ composition primarily in urban areas is available from the EPA Speciation Trends Network beginning in 2001. $PM_{2.5}$ composition data for primarily rural areas (*e.g.* national parks and wilderness areas) is available from the IMPROVE visibility monitoring network beginning in 1988. Speciation data from September 2001 to August 2002 are summarized for urban and rural areas in nine regions in table 2.

BILLING CODE 6560–50–U

[20] Environmental Protection Agency. (2004) Air Quality Criteria for Particulate Matter. Research Triangle Park, NC: Office of Research and Development; report no. EPA/600/P–99/002a,bF. October. The 2004 PM criteria document is available at: *http://www.epa.gov/ttn/naaqs/standards/pm/s_pm_cr_cd.html.*

TABLE 2. PM2.5 CHEMICAL COMPOSITION DATA, SEPTEMBER 2001 - AUGUST 2002

		URBAN SITES						RURAL SITES					
REGION (# sites)	Metric	Sulfate	Estimated Ammonium	Nitrate	Total Carbon Mass	Crustal Material	URBAN TOTAL	Sulfate	Estimated Ammonium	Nitrate	Total Carbon Mass	Crustal Material	RURAL TOTAL
Southeast	Mass	4.0	1.7	0.7	5.1	0.6	12.1	3.2	1.4	0.4	2.8	0.5	8.3
(8 urban/11 rural)	%	33%	14%	6%	42%	5%	100%	39%	17%	5%	34%	6%	100%
Midwest	Mass	4.1	2.1	2.6	5.2	0.7	14.7	4.2	1.8	1.1	2.8	0.7	10.6
(8 urban/7 rural)	%	28%	14%	18%	35%	5%	100%	40%	17%	10%	26%	7%	100%
East Coast	Mass	4.5	2.3	2.0	6.2	0.6	15.6	4.1	1.6	0.7	3.1	0.5	10.0
(10 urban/8 rural)	%	29%	15%	13%	40%	4%	100%	41%	16%	7%	31%	5%	100%
California	Mass	1.9	2.7	7.0	9.5	1.0	22.1	0.8	0.4	0.4	2.1	0.6	4.3
(5 urban, 14 rural)	%	9%	12%	32%	43%	5%	100%	19%	9%	9%	49%	14%	100%
Desert-West	Mass	1.3	0.8	1.0	6.1	1.5	10.7	0.7	0.3	0.2	1.2	1.3	3.7
(5 urban/29 rural)	%	12%	7%	9%	57%	14%	100%	19%	8%	5%	32%	35%	100%
Northwest	Mass	1.2	0.7	0.8	4.4	0.4	7.5	0.4	0.3	0.2	1.7	0.4	3.0
(2 urban/17 rural)	%	16%	9%	11%	59%	5%	100%	13%	10%	7%	57%	13%	100%
East Texas/South	Mass	3.3	1.6	1.1	4.2	0.9	11.1	3.0	1.4	0.8	2.4	0.8	8.4
(3 urban/3 rural)	%	30%	14%	10%	38%	8%	100%	36%	17%	10%	29%	10%	100%
Far North East	Mass	2.7	1.3	1.1	4.3	0.4	9.8	2.1	0.9	0.4	2.3	0.3	6.0
(2 urban/11 rural)	%	28%	13%	11%	44%	4%	100%	35%	15%	7%	38%	5%	100%
North Plains	Mass	1.8	1.2	1.9	3.0	0.6	8.5	0.7	0.4	0.2	1.5	0.5	3.3
(2 urban/17 rural)	%	21%	14%	22%	35%	7%	100%	21%	12%	6%	45%	15%	100%

Source: EPA Speciation Trends Network, IMPROVE visibility monitoring network

Notes:

1. All units are in micrograms/cubic meter. All mass numbers represent median annual average values for the time period September 2001-A
2. All sites included in analyses had complete data for this time period as defined by 50% or more observations per quarter for all major chem
3. All Ammonium concentrations are estimated from a 'fully-neutralized' assumption of ammonium sulfate and ammonium nitrate.
4. The regions are defined as follows:

South East: AL, SC, NC, LA, MS, TN, FL, GA

Mid West: IL, IN, Eastern IA, Southern MI, South-Eastern WI, MO, OH, KY

East Coast/North East: DC, MD, NJ, NY, Northern VA, PA, Northern WV

CA: All of CA

Desert West: Eastern AZ, CO, NV, UT, Western TX, NM

North West: WA, OR, ID

East Texas, South: Dallas, Houston, AK, Southern OK

Far North East: ME, VT, NH, Upstate NY

North Plains: MN, Dakotas, Upper MI, MT, WY

BILLING CODE 6560–50–C

This discussion focuses on the eastern U.S. and California since most nonattainment areas will be located in those regions. In general, urban areas have higher annual average $PM_{2.5}$ concentrations than nearby rural areas. In the eastern U.S. urban areas, ammonium sulfate and total carbon (comprised of black carbon and organic carbon) are the dominant species, each accounting for 30–40 percent of total reconstructed mass in most locations. (Reconstructed mass is the PM mass calculated by adding together the mass from each of the main components of PM as obtained from chemical composition monitoring.) Nitrate plus associated ammonium ion is a more significant component of PM mass in northern regions, such as the midwest and east coast, but is a less significant fraction in the southeast. In California, the main species contributing to urban $PM_{2.5}$ mass are ammonium nitrate (35–40 percent) and total carbon (43 percent), while sulfate and associated ammonium accounts for approximately 10–15 percent.

Table 3 compares chemical composition data for 13 pairs of urban and nearby non-urban sites in order to identify the primary components that make up the ''urban increment.'' To conduct this analysis, for each species the $PM_{2.5}$ mass in the rural location is subtracted from the species mass for the urban location. The amount by which the urban site exceeds the nearby rural site is the ''urban increment.'' [21]

[21] V. Rao, N. Frank, A. Rush, F. Dimmick, ''Chemical Speciation of $PM_{2.5}$ in Urban and Rural Areas,'' In the Proceedings of the Air & Waste Management Association Symposium on Air Quality Measurement Methods and Technology, San Francisco, November 13–15, 2002.

TABLE 3.—URBAN INCREMENT ANALYSIS FOR 13 URBAN/RURAL PAIRS

[All values in micrograms per cubic meter]

Chemical species	West (3 site pairs)			East (10 site pairs)		
	Min.	Max.	Avg.	Min.	Max.	Avg.
Sulfate	0.2	0.7	0.5	−0.5	1.1	0.3
Est. Ammonium	0.2	2.2	1.2	0.1	0.8	0.4
Nitrate	0.6	6.9	3.7	0.4	1.4	0.8
Total Carbon	4.8	9.8	6.6	2.1	5.3	3.1
Crustal	0.1	0.6	0.4	−0.1	0.8	0.3
Total Excess	5.8	20.1	12.4	2.0	9.4	4.8

Carbonaceous mass is the largest contributor to urban increments in all regions of the country. In east coast and midwestern urban areas, carbon can account for as much as 70–90 percent of the total urban increment. The highest local increment of carbon as calculated from available data appears to be about 10 μg/m^3 in Fresno, CA. Nonroad diesel, onroad diesel, gasoline highway vehicles, and fire related activities are regarded to be important major contributors to this urban excess of carbon. The relative amounts of primary versus secondary organic compounds in the ambient air vary with location and time of year. While it is difficult to generalize, it is clear that both primary and secondary organic compounds are significant contributors to ambient $PM_{2.5}$ mass in many parts of the country.

The urban increment for sulfate, on the other hand, appears to be fairly low in most locations. Rural and urban sulfate levels are often very similar, indicating that sulfate is a regional pollutant that can be transported long distances. This is consistent with the fact that power plants are the principal sources of SO_2, the precursor to sulfate, and in general, these plants are located outside urban core areas. In some eastern cities, the small estimated urban excess (up to 0.5 μg/m^3) may be attributed to a range of source types, including power plants located within the metro area, the combustion of sulfur-laden fuel oil used for commercial or institutional heating, and fuel combustion by diesel and gasoline motor vehicles.

Excess nitrate concentrations are observed predominantly in northern, midwestern, and western locations, comprising a larger local contribution than sulfate or crustal material. Nitrate is particularly high in the winter time partly because it is less volatile at colder temperatures and partly because SO_2 is less prone to react preferentially with ammonium in the winter as opposed to the summer. Local sources of NO_X leading to excess urban nitrate likely include mobile sources and other types of fuel combustion.

Some locations also show a small urban excess of crustal material (*e.g.* inorganic material including metals, dust, sea salt, and other trace elements). The estimation procedure used in the IMPROVE protocol includes the measurement of iron and other trace elements. Therefore, this difference also reflects oxidized particulate metals, some of which may be attributed to road dust or industrial sources in urban areas.

We have developed a National Emissions Inventory (NEI) inventory for use in analyzing trends in emissions, conducting various regulatory analyses for PM, and for use in regional scale modeling.[22] The NEI covers all 50 States plus some of the U.S. territories, and includes point, area, onroad and nonroad mobile sources, biogenic, and geogenic emissions. Large stationary sources are located individually in the inventory while county tallies are used for smaller stationary sources, and area and mobile source category groups. Spatial, temporal and compositional profiles are used to allocate these emissions to time-resolved grids for chemical transport modeling. The inventory includes emissions of SO_2, NO_X, VOC, NH_3, PM_{10}, and $PM_{2.5}$. A brief discussion of each particle type, their principal sources (based on the NEI), formation mechanisms, and spatial and temporal patterns follows.

Primary PM (Crustal and Carbonaceous). This section addresses inorganic and organic forms of primary PM. The main anthropogenic sources of inorganic (or crustal) particles are: Entrainment by vehicular traffic on unpaved or paved roads; mechanical disturbance of soil by highway, commercial, and residential construction; and agricultural field operations (tilling, planting and harvesting). However, much of these emissions are coarse PM rather than fine PM.

Industrial processes such as quarries, minerals processing, and agricultural crop processing can also emit crustal materials, but their influence is most important close to the source and they are not generally significant contributors to regional scale PM problems. Even so, during certain high wind events, fine crustal PM has been shown to be transported over very long distances. Satellite data and other studies have shown that dust has been transported into the U.S. as a result of Asian or African dust storms.

Emission estimates of mechanically suspended crustal PM from sources within the U.S. are often quite high. However, this PM is often released very close to the ground, and with the exception of windblown dust events, thermal or turbulent forces sufficient to lift and transport them very far from their source are not usually present. Thus, as shown in table 1, crustal material is only a minor part of $PM_{2.5}$ annual average concentrations.

Primary carbonaceous particles are largely the result of incomplete combustion of fossil or biomass fuels. This incomplete combustion usually results in emissions of both black carbon and organic carbon particles. High molecular weight organic molecules (*i.e.*, molecules with 25 or more carbon atoms) are either emitted as solid or liquid particles, or as gases that rapidly condense into particle form. These heavy organic molecules sometimes are referred to as volatile organic compounds, but because their characteristics are most like direct PM emissions, they will be considered to be primary emissions for the purposes of this regulation. Primary organic carbon

[22] USEPA, *National Air Quality and Emissions Trends Report: 2003 Special Studies Edition,* Report Number EPA–454/R–03–005, Research Triangle Park, NC, September 2003. USEPA, *National Air Pollutant Emissions Trends,* Report Number EPA–454/R–00–002, Research Triangle Park, NC, March 2000. See also: *http://www.epa.gov/ttn/chief/trends/.*

also can be formed by condensation of semi-volatile compounds on the surface of other particles.

The main combustion sources emitting carbonaceous $PM_{2.5}$ are mobile sources (both onroad and nonroad), managed burning, wildland fires, open burning of waste, residential wood combustion, certain industrial processes, and coal and oil-burning boilers (utility, commercial and industrial). Certain organic particles also come from natural sources such as decomposition or crushing of plant detritus. Most combustion processes emit more organic particles than black carbon particles. A notable exception to this are diesel engines, which typically emit more black carbon particles than organic carbon. Because photochemistry is typically reduced in the cooler winter months for much of the country, studies indicate that the carbon fraction of PM mass in the winter months is likely dominated by direct PM emissions as opposed to secondarily formed organic aerosol.

Particles from the earth's crust may contain a combination of metallic oxides and biogenic derived organic matter. The combustion of surface debris will likely entrain some soil. Additionally, emissions from many processes and from the combustion of fossil fuels contain elements that are chemically similar to soil. Thus, a portion of the emissions from combustion activities may be classified as crustal in a compositional analysis of ambient $PM_{2.5}$.

Secondary PM. Although some sulfate and nitrate salts (*i.e.* calcium sulfate, calcium nitrate) and acids (*i.e.* sulfuric acid, nitric acid) are directly emitted by sources under certain circumstances, sulfates and nitrates are predominately formed as a result of chemical reactions with ammonia and other compounds in the atmosphere. (See next sections for more detail.) During combustion, very small combustion nucleation particles (ultrafine particles, less than 0.1μm) are produced. These small particles act as nucleation sites where gases, water vapor, and other nucleation particles can condense or coagulate and therefore cause particle growth in both particle size and particle mass. Ammonium sulfate, ammonium nitrate, and secondarily formed organic aerosols, as well as agglomerating fine particles, all may use these ultrafine particles in their formation and growth in the atmosphere. The secondary organic aerosol (SOA) component of $PM_{2.5}$ is a complex mixture of perhaps thousands of organic compounds. A brief discussion of the sources of SO_2, NO_X, NH_3, and organic gases (including VOC and semi-volatile compounds), and the formation of sulfate, nitrate and secondary organic aerosol follows. More detailed discussions of the formation and characteristics of secondary particles can be found in the U.S. EPA Criteria Document,[23] and in the NARSTO Fine Particle Assessment,[24] on which much of the following discussion is based.

Sulfate. SO_2 is emitted mostly from the combustion of fossil fuels in boilers operated by electric utilities and other industry. Less than 20 percent of SO_2 emissions nationwide are from other sources, mainly from other industrial processes including oil refining and pulp and paper production.

The formation of sulfuric acid from the oxidation of SO_2 is an important process for most areas in North America. There are three different pathways for this transformation. First, gaseous SO_2 can be oxidized by the hydroxyl radical (OH) to create sulfuric acid. This gaseous SO_2 oxidation reaction occurs slowly and only in the daytime. The hydroxl radical is an important product of the atmospheric chemistry process that forms ozone through the oxidation of NO_X to form nitric acid. It is also involved in the formation of secondary organics.

Second, SO_2 can dissolve in cloud water (or fog or rain water), and there it can be oxidized to sulfuric acid by a variety of oxidants, or through catalysis by transition metals such as manganese or iron. If ammonia is present and taken up by the water droplet, then ammonium sulfate will form as a precipitant in the water droplet. After the cloud changes and the droplet evaporates, the sulfuric acid or ammonium sulfate remains in the atmosphere as a particle. This aqueous-phase production process involving oxidants can be very fast; in some cases all the available SO_2 can be oxidized in less than an hour.

Third, SO_2 can be oxidized in reactions in the particle-bound water in the aerosol particles themselves. This process takes place continuously, but only produces appreciable sulfate in alkaline (dust, sea-salt) coarse particles.[25] Oxidation of SO_2 has been also observed on the surfaces of black carbon and metal oxide particles. During the last twenty years, much progress has been made in understanding the first two major pathways, but some important questions still remain about the smaller third pathway. Models indicate that more than half of the sulfuric acid in the eastern United States and in the overall atmosphere is produced in clouds.[26]

The sulfuric acid formed from the above pathways reacts readily with ammonia to form ammonium sulfate, $(NH4)2SO_4$. If there is not enough ammonia present to fully neutralize the produced sulfuric acid (one molecule of sulfuric acid requires two molecules of ammonia), part of it exists as ammonium bisulfate, $NH4HSO_4$ (one molecule of sulfuric acid and one molecule of ammonia) and the particles are more acidic than ammonium sulfate. In extreme cases (in the absence of sufficient ammonia for neutralization), sulfate can exist in particles as sulfuric acid, $H2SO_4$. Sulfuric acid often exists in the plumes of stacks where SO_2, SO_3, and water vapor are in much higher concentrations than in the ambient atmosphere, but these concentrations become quite small as the plume is cooled and diluted by mixing.

Nitrate. The main sources of NO_X are combustion of fossil fuel in boilers and onroad mobile sources. Together they account for more than 60 percent of NO_X emissions in $PM_{2.5}$ nonattainment areas (based on 2001 emission inventory information), with stationary and mobile source fuel combustion each accounting for about half of these emissions. Nitrates are formed from the oxidation of oxides of nitrogen into nitric acid either during the daytime

[23] USEPA, 2003. Air Quality Criteria for Particulate Matter (Fourth External Review Draft). EPA/600/P–99/002aD and bD. U.S. Environmental Protection Agency, Office of Research and Development, National Center For Environmental Assessment, Research Triangle Park Office, Research Triangle Park, NC. June 2003. Available electronically at *http://cfpub.epa.gov/ncea/cfm/partmatt.cfm.*

[24] North American Research Strategy for Tropospheric Ozone and Particulate Matter (NARSTO) (2004) Particulate Matter Assessment for Policy Makers: A NARSTO Assessment. P. McMurry, M. Shepherd, and J. Vickery, eds. Cambridge University Press, Cambridge, England. ISBN 0 52 184287 5. For more information, see *http://www.cgenv.com/NARSTO.* See also supporting technical information for the Clear Skies Act, *http://www.epa.gov/clearskies/,* and for the Clean Air Interstate Rule, *http://www.epa.gov/cleanairinterstaterule.*

[25] Sievering, H., Boatman, J., Gorman, E., Kim, Y., Anderson, L., Ennis, G., Luria, M., Pandis, S.N., 1992. Removal of sulfur from the marine boundary layer by ozone oxidation in sea-salt. Nature 360, 571–573.

[26] McHenry, J.N., Dennis, R.L., 1994. The relative importance of oxidation pathways and clouds to atmospheric ambient sulfate production as predicted by the Regional Acid Deposition Model. Journal of Applied Meteorology 33, 890–905. Also: Langner, J., Rodhe, H., 1991. A global three dimensional model for the tropospheric sulfur cycle. Journal of Atmospheric Chemistry 13, 225–263.

(reaction with OH) or during the night (reactions with ozone and water).[27]

Nitric acid continuously transfers between the gas and the condensed phases through condensation and evaporation processes in the atmosphere. However, unless it reacts with other species (such as ammonia, sea salt, or dust) to form a neutralized salt, it will volatize and not be measured using standard $PM_{2.5}$ measurement techniques.[28] The formation of aerosol ammonium nitrate is favored by the availability of ammonia, low temperatures, and high relative humidity. Because ammonium nitrate is not stable in higher temperatures, nitrate levels are typically lower in the summer months and higher in the winter months. The resulting ammonium nitrate is usually in the sub-micrometer particle size range. Reactions with sea-salt and dust lead to the formation of nitrates in coarse particles. Nitric acid may be dissolved in ambient aerosol particles.

Secondary Organic Aerosol (SOA). The organic component of ambient particles is a complex mixture of hundreds or even thousands of organic compounds. These organic compounds are either emitted directly from sources (*i.e.* primary organic aerosol) or can be formed by reactions in the ambient air (*i.e.* secondary organic aerosol, or SOA).

Volatile organic compounds[29] are key precursors in both the SOA and ozone formation processes. The lightest organic molecules (*i.e.*, molecules with six or fewer carbon atoms) occur in the atmosphere mainly as vapors and typically do not directly form organic particles at ambient temperatures due to the high vapor pressure of their products. However, they participate in atmospheric chemistry processes resulting in the formation of ozone and certain free radical compounds (such as the hydroxyl radical [OH]) which in turn participate in the oxidation of semivolatile organic compounds to form secondary organic aerosols, sulfates and nitrates. These VOCs include all alkanes with up to six carbon atoms (from methane to hexane isomers), all alkenes with up to six carbon atoms (from ethene to hexene isomers), benzene and many low-molecular weight carbonyls, chlorinated compounds, and oxygenated solvents. The relative importance of organic compounds in the formation of organic particles varies from area to area, depending upon local emissions sources, atmospheric chemistry, and season of the year. Intermediate weight organic molecules (*i.e.*, compounds with 7 to 24 carbon atoms) often exhibit a range of volatilities and can exist in both the gas and aerosol phase. For this reason they are also referred to as semivolatile compounds. Semivolatile compounds react in the atmosphere to form secondary organic aerosols. These chemical reactions are accelerated in warmer temperatures, and studies show that SOA typically comprises a higher percentage of carbonaceous PM in the summer as opposed to the winter.

The production of SOA from the atmospheric oxidation of a specific VOC depends on four factors: Its atmospheric abundance, its chemical reactivity, the availability of oxidants (O_3, OH, HNO_3), and the volatility of its products. In addition, recent work by Jang and others suggests that the presence of acidic aerosols may lead to an increased rate of SOA formation.[30]

Aromatic compounds such as toluene, xylene, and trimethyl benzene are considered to be the most significant anthropogenic SOA precursors and have been estimated to be responsible for 50 to 70 percent of total SOA in some airsheds.[31] As organic gases such as aromatics are oxidized in the gas phase by species such as the hydroxyl radical (OH), ozone (O_3), and the nitrate radical (NO_3) their oxidation products accumulate. Some of these products have low volatility and condense on available particles in an effort to establish equilibrium between the gas and condensed phases. Man-made sources of aromatics gases are mobile sources, petrochemical manufacturing and solvents. The experimental work of Odum and others[32] showed that the secondary organic aerosol formation potential of gasoline could be accounted for solely in terms of its aromatic fraction.

Some of the biogenic hydrocarbons emitted by trees are also considered to be important precursors of secondary organic particulate matter. Terpenes (α- and β-pinene, limonene, carene, etc.) and the sesquiterpenes are expected to be major contributors to SOA in areas with significant vegetation cover, but isoprene is not. Terpenes are very prevalent in forested areas, especially in the southeastern U.S. The rest of the anthropogenic hydrocarbons (higher alkanes, paraffins, etc.) have been estimated to contribute 5–20 percent to the SOA concentration depending on the area.

TABLE 4.—ROLE OF ORGANIC GASES IN SECONDARY ORGANIC AEROSOL FORMATION

	SOA-forming organic gases	Non SOA-forming organic gases
Anthropogenic	—Aromatics (esp. toluene, xylenes, trimethyl-benzenes) —Higher alkanes (>6 C atoms)	—Lower alkanes <6 C atoms, (ethane to hexane isomers). —Benzene. —Lower MW carbonyls, chlorinated compounds & oxygenated solvents.
Biogenic	—Terpenes (esp. α- and β-pinene, limonene, carene) —Sesquiterpenes	—Isoprene.

The contribution of the primary and secondary components of organic aerosol to the measured organic aerosol concentrations remains a controversial issue. Most of the research performed to date has been done in southern California, and more recently in central California, while fewer studies have been completed on other parts of North

[27] Wayne, R.P., *et al.*, 1991. The nitrate radical: physics, chemistry and the atmosphere. Atmospheric Environment 25A, 1–203.

[28] Seinfeld, J.H., Pandis, S.N., 1998. Atmospheric Chemistry and Physics: From Air Pollution to Climate Change. J. Wiley, New York.

[29] 29 As discussed earlier, high molecular weight organic molecules (*i.e.*, molecules with 25 or more carbon atoms) are either emitted directly as particles or as liquids that rapidly condense onto existing particles. Because these condensable emissions act primarily as direct PM emissions, they are to be regulated as direct $PM_{2.5}$ emissions, not as VOC precursors, for the purposes of this regulation.

[30] Jang, M.; Czoschke, N.; Lee, S.; Kamens, R. Heterogenous Atmospheric Aerosol Production by Acid-Catalyzed Particle-Phase Reactions, *Science*, vol. 298, p. 814–817, October 25, 2002.

[31] Grosjean, D., Seinfeld, J.H., 1989. Parameterization of the formation potential of secondary organic aerosols. Atmospheric Environment 23, 1733–1747.

[32] Odum, J.R., Jungkamp, T.P.W., Griffin, R.J., Flagan, R.C., Seinfeld, J.H., 1997. The atmospheric aerosol-forming potential of whole gasoline vapor. Science 276, 97–99.

America. Early studies suggested that the majority of the observed organic particulate matter was secondary in nature. Later investigators focusing on the emissions of primary organic material proposed that 80 percent or so of the organic aerosol in Southern California on a monthly basis resulted from direct organic particle emissions.[33] More recent studies suggest that the primary and secondary contributions are highly variable even during the same day. Studies of pollution episodes indicated that the contribution of SOA to the organic particulate matter varied from 20 percent to 80 percent during the same day.[34]

Despite significant progress that has been made in understanding the origins and properties of SOA, it remains the least understood component of $PM_{2.5}$. The reactions forming secondary organics are complex and the number of intermediate and final compounds formed is voluminous. Some of the best efforts to unravel the chemical composition of ambient organic aerosol matter have been able to quantify the concentrations of hundreds of organic compounds representing only 10–20 percent of the total organic aerosol mass. For this reason, SOA continues to be a significant topic of research and investigation.

C. The Role of Ammonia in Sulfate, Nitrate & Secondary Organic Aerosol Formation

Ammonia (NH_3) is a gaseous pollutant that is emitted by natural and anthropogenic sources. Emissions inventories for ammonia are considered to be among the most uncertain of any species related to PM. One recent estimate shows, however, that livestock (73 percent) and fertilizer application (17 percent) are the two primary sources of emissions.[35] (Note that these estimates do not include natural emissions from soil, which can be significant.)

Ammonia serves an important role in neutralizing acids in clouds, precipitation and particles. In particular, ammonia neutralizes sulfuric acid and nitric acid, the two key contributors to acid deposition (acid rain). Deposited ammonia also can be an important nutrient, contributing to problems of eutrophication in water bodies.[36] Ammonia would not exist in particles, if not for the presence of acidic species with which it can combine to form a particle. In the eastern U.S., sulfate, nitrate, and the ammonium associated with them can together account for between roughly 30 percent and 75 percent of the $PM_{2.5}$ mass. The ammonium itself roughly accounts for between 5 percent and 20 percent of the $PM_{2.5}$.[37]

The NARSTO Fine Particle Assessment indicates that sulfates form preferentially over nitrates and that particle nitrate formation is affected by a number of factors, including the availability of sulfates, NO_X, ammonia, nitric acid and VOCs. The report also notes that implementing decreasing ammonia emissions where sulfate concentrations are high can reduce $PM_{2.5}$ mass concentrations, but may also increase particle and precipitation acidity.[38] As noted above, this acidification of particles may result in an increase in the formation of secondary organic compounds. Moreover, the relationship between ammonia and sulfate-nitrate equilibrium may also impact SOA formation, although this link is not well understood. Recent studies of ammonia sources and possible emission reduction measures indicate that ammonia controls are a maturing science, but that ongoing research will greatly improve our understanding of such control measures.

The same can be said of our understanding of the role of ammonia in aerosol formation. Based on the above information and further insights gained from the NARSTO Fine Particle Assessment, it is apparent that the formation of sulfate, nitrate and SOA compounds is a complex, nonlinear process. The control techniques for ammonia and the analytical tools to quantify the impact of reducing ammonia emissions on atmospheric aerosol formation are both evolving sciences. Also, there are indications that there may be considerable ambiguity concerning the results of reducing ammonia emissions and in some cases, there may be undesired consequences of ammonia reductions. Therefore, based on our current understanding of ammonia's role in these complex precursor interactions and emission reduction processes, it seems prudent to continue research on ammonia control technologies and the ammonia—sulfate—nitrate—SOA equilibrium before one undertakes broad national programs to reduce ammonia emissions. However, as States and EPA develop a greater understanding over the coming years about the potential air quality effects of reducing ammonia emissions in specific nonattainment areas, it may be appropriate for ammonia reduction strategies to be included in future SIPs. At this time, however, we believe that reducing SO_2 and NO_X will allow us to move with greater certainty toward achieving our nation's air quality goals. We encourage you to provide comments on the resolution of this issue.

D. Regional Patterns of Carbon, Sulfate and Nitrate, and Indications of Transport

Table 2 above shows that much of the eastern U.S., both urban and non-urban areas alike, is subject to high $PM_{2.5}$ concentrations, with the highest concentrations occurring in urban areas. Table 3 above compares the urban and rural concentrations of sulfate, nitrate, and carbon particles. The data show that there are high concentrations of sulfate across the region and that sulfate at urban monitoring sites is only slightly higher than at nearby non-urban sites. In contrast, the carbon mass at urban sites is significantly higher than at the nearby non-urban sites. This seems to indicate that sulfate is present on a much more regional scale and likely is associated with significant pollutant transport. On the other hand, a sizeable fraction of the carbonaceous mass seems to be more associated with urban sources. Mobile sources are much more concentrated in urban areas and may explain much of the elevated urban carbon concentrations. However, black carbon and organic aerosols still make up a large percentage of the non-urban air quality composition, indicating that there is a regional background level of carbon that is enhanced in urban areas by local sources.

The atmospheric lifetimes of particles and thus the distances they can be transported vary with particle size. The regional nature of $PM_{2.5}$ reflects the fact that fine particles can be transported over long distances. Ultra-fine and fine particles rapidly grow in size into a relatively stable size range, generally less than 2 μm. These fine particles are kept suspended by normal air motions and have very low deposition rates to surfaces. They can be transported

[33] Hildemann, L.M., Cass, G.R., Mazurek, M.A., Simoneit, B.R.T., 1993. Mathematical modeling of urban organic aerosol properties measured by high resolution gas-chromatography. Environmental Science and Technology 27, 2045–2055.

[34] Turpin, B.J., Lim, H.J., 2000. Species contributions to PM mass concentrations: Revisiting common assumptions for estimating organic mass, Aerosol Science and Technology, vol. 35, no. 1, p. 602–610.

[35] Anderson, N., R. Strader, and C. Davidson (2003) Airborne reduced nitrogen: Ammonia emissions from agriculture and other sources, Environment International, 29: 277–286.

[36] Seinfeld, J.H., Pandis, S.N., 1998. Atmospheric Chemistry and Physics: From Air Pollution to Climate Change. J. Wiley, New York.

[37] NARSTO, 2003. Particulate Matter Science for Policy Makers—A NARSTO Assessment. Parts 1 and 2. NARSTO Management Office (Envair), Pasco, Washington. *http://www.cgenv.com/NARSTO.*

[38] Ibid, at S–31 (table S.4).

thousands of kilometers and remain in the atmosphere for a number of days. Thus, they are important when considering regional PM transport. Coarse particles can settle rapidly from the atmosphere within hours and normally travel only short distances. However, when mixed high into the atmosphere, as in some dust storms, the smaller-sized coarse-mode particles may have longer lives and travel greater distances.

Meteorology also plays a role in the size and characteristics of particles. High temperatures increase reaction rates, which may explain why sulfate concentrations are generally greatest in the summer. Conversely, lower temperatures result in a greater fraction of nitrates being in the particle phase. Fine particles, especially particles with a hygroscopic component, grow as the relative humidity increases, serve as cloud condensation nuclei, and grow into cloud droplets. If the cloud droplets grow large enough to form rain, the particles are removed in the rain. Falling rain drops impact coarse particles and remove them. Very fine particles are small enough to diffuse to the falling drop, be captured, and be removed in rain. However, falling rain drops are not nearly as effective in removing $PM_{2.5}$ as the cloud processes mentioned above. Sulfuric acid, ammonium nitrate, ammonium sulfates, and organic particles also are deposited on surfaces by dry deposition. Therefore, reductions in SO_2 and NO_X emissions will decrease both acidic deposition and PM concentrations.

E. Policy for Addressing $PM_{2.5}$ Precursors

1. Legal Authority To Regulate Precursors

The Clean Air Act authorizes the Agency to regulate criteria pollutant precursors. The term 'air pollutant'' is defined in section 302(g) to include ''any precursors to the formation of any air pollutant, to the extent the Administrator has identified such precursor or precursors for the particular purpose for which the term 'air pollutant' is used.''' The first clause of this second sentence in section 302(g) explicitly authorizes the Administrator to identify and regulate precursors as air pollutants under other parts of the Act. In addition, the second clause of the sentence indicates that the Administrator has discretion to identify which pollutants should be classified as precursors for particular regulatory purposes. Thus, we do not necessarily construe the Act to require that EPA identify a particular precursor as an air pollutant for all regulatory purposes where it can be demonstrated that various Clean Air Act programs address different aspects of the air pollutant problem. Likewise, we do not interpret the Act to require that EPA treat all precursors of a particular pollutant the same under any one program when there is a basis to distinguish between such precursors. For example, in a recent rule addressing $PM_{2.5}$ precursors for purposes of transportation conformity, we chose to adopt different approaches for some precursors based on the degree to which the various precursors emitted by transportation-related sources contributed to the $PM_{2.5}$ air quality problem. 70 FR 24280 (May 6, 2005).

Other provisions of the Act reinforce our reading of section 302(g) that Congress intended precursors to NAAQS pollutants to be subject to the air quality planning and control requirements of the Act, but also recognized that there may be circumstances where it is not appropriate to subject precursors to certain requirements of the Act. Section 182 of the Act provides for the regulation of NO_X and VOCs as precursors to ozone in ozone nonattainment areas, but also provides in Section 182(f) that major stationary sources of NO_X (an ozone precursor) are not subject to emission reductions controls for ozone where the State shows through modeling that NO_X reductions do not decrease ozone. Section 189(e) provides for the regulation of PM_{10} precursors in PM_{10} nonattainment areas, but also recognizes that there may be certain circumstances where it is not appropriate to apply control requirements to PM_{10} precursors. In providing that the Agency was to issue guidelines for the control of PM_{10} precursors, the legislative history of Section 189(e) recognized the complexity behind the science of precursor transformation into PM_{10} ambient concentrations and the need to harmonize the regulation of PM_{10} precursors with other provisions of the Act:

> The Committee notes that some of these precursors may well be controlled under other provisions of the Act. The Committee intends that * * * the Administrator will develop models, mechanisms, and other methodology to assess the significance of the PM_{10} precursors in improving air quality and reducing PM_{10}. Additionally, the Administrator should consider the impact on ozone levels of PM_{10} precursor controls. The Committee expects the Administrator to harmonize the PM_{10} reduction objective of this section with other applicable regulations of this Act regarding PM_{10} precursors, such as NO_X.

See H. Rpt. 101–490, Pt. 1, at 268 (May 17, 1990), reprinted in S. Prt. 103–38, Vol. II, at 3292.

In summary, section 302(g) of the Act clearly calls for the regulation of precursor pollutants, but the Act also identifies circumstances when it may not be appropriate to regulate precursors and gives the Administrator discretion to determine how to address particular precursors under various programs required by the Clean Air Act. Due to the complexities associated with precursor emissions and their variability from location to location, we believe that in certain situations it may not be effective or appropriate to control a certain precursor under a particular regulatory program or for EPA to require similar control of a particular precursor in all areas of the country.

In the following section II.E.2, we discuss our proposal for how States should address $PM_{2.5}$ precursors for the majority of the nonattainment program issues in $PM_{2.5}$ implementation plans, such as RACT, RACM, reasonable further progress and most of the other issues discussed in section III. This discussion is linked to related discussions of precursor issues in the NSR section of this package (see section III.M.), the transportation conformity program (see section III.K. of this package, and the conformity regulations [39]), and the general conformity program (see section III.L. of this package. All of these programs take effect prior to approval of SIPs for attaining the $PM_{2.5}$ NAAQS. In the case of NSR, the program applies on the effective date of the nonattainment area designation. In the case of transportation conformity and general conformity, the program takes effect one year from the effective date of designation of the nonattainment area (i.e., April 5, 2006). Thus, for each of these programs there is an interim period between the date the program becomes applicable to a given nonattainment area and the date the State receives EPA approval of its overall $PM_{2.5}$ implementation plan. Options for addressing $PM_{2.5}$ precursors in the NSR program are discussed in section III.M. below. For the transportation conformity program, precursor policies are addressed in the final rule on $PM_{2.5}$ precursors.[40]

[39] See the final transportation conformity rule (69 FR 40004; July 1, 2004); the conformity rule amendments addressing $PM_{2.5}$ precursors (70 FR 24280; May 6, 2005); and transportation conformity regulations at 40 CFR Parts 51 and 93.

[40] The final transportation conformity rule on $PM_{2.5}$ precursors was published in the **Federal Register** on May 6, 2005 at 70 FR 24280.

2. Proposed Policy Options for Addressing $PM_{2.5}$ Precursors in Nonattainment Plan Programs

This section discusses potential options for addressing the $PM_{2.5}$ precursors SO_2, ammonia, NO_X and volatile organic compounds in $PM_{2.5}$ nonattainment plan programs other than NSR and transporation conformity. Several other preamble sections in today's notice, including those on RFP, RACT, RACM, and modeling and attainment demonstrations refer the reader to this overall section. Our approach to precursors of $PM_{2.5}$ in these areas will be decided after consideration of comments through this rulemaking process and our policy for $PM_{2.5}$ precursors will be stated in the final rule.

As an initial matter, it is helpful to clarify the terminology we use throughout this notice to discuss precursors. We recognize NO_X, SO_2, VOCs, and ammonia as precursors of $PM_{2.5}$ in the scientific sense because these pollutants can contribute to the formation of $PM_{2.5}$ in the ambient air. However, the degree to which these individual precursors and pollutants contribute to $PM_{2.5}$ formation in a given location is complex and variable. This requires that we further consider in this action how States should address these $PM_{2.5}$ precursors in their $PM_{2.5}$ nonattainment plan programs. Thus, where we believe that all states should address a given precursor of $PM_{2.5}$ under a specific $PM_{2.5}$ nonattainment plan requirement, we refer to it more specifically as a ''$PM_{2.5}$ nonattainment plan precursor, transportation conformity precursor, or NSR precursor. We request comment on all aspects of the proposed options set forth below.

Sulfur dioxide. We believe the previous technical discussion and analysis of speciated air quality data provides an appropriate basis for requiring States to address sulfur dioxide as a $PM_{2.5}$ nonattainment plan precursor in all areas.[41] The fact that sulfate is a significant contributor (e.g. ranging from 9 percent to 40 percent) to $PM_{2.5}$ nonattainment and other air quality problems in all regions of the country is a critical piece of evidence supporting this approach. The EPA requests comments on the requirement that SO_2 is a $PM_{2.5}$ nonattainment plan precursor in all nonattainment areas.

Ammonia. In regard to ammonia, however, we believe there is sufficient uncertainty about emissions inventories and about the potential efficacy of control measures from location to location such that the most appropriate approach for proposal is a case-by-case approach. Ammonia reductions may be appropriate in selected locations, but in others such reductions may lead to increased atmospheric acidity, exacerbating acidic deposition problems. Each State should evaluate whether reducing ammonia emissions would lead to $PM_{2.5}$ reductions in their specific $PM_{2.5}$ nonattainment areas. Under this proposed policy, however, States are not required to address ammonia as a $PM_{2.5}$ nonattainment plan precursor, unless the State or EPA makes a technical demonstration that ammonia emissions from sources in the State significantly contribute to the $PM_{2.5}$ problem in a given nonattainment area or to other downwind air quality concerns. As noted above, ammonia reductions may be effective primarily in areas where nitric acid is in abundance and ammonia is the limiting factor to ammonium nitrate formation. Where the State or EPA has determined that ammonia is a significant contributor to $PM_{2.5}$ formation in a nonattainment area, the State would address ammonia emissions in its nonattainment SIP due in 2008. From that point in time, the implementation of the PM program and other associated programs (e.g. the NSR program and transportation conformity program) in that area would proceed in accordance with this determination.[42] Ammonia will be addressed under the transportation conformity program if the SIP establishes a budget specifically for on-road ammonia emissions. The EPA requests comments on this approach to addressing ammonia emissions under the $PM_{2.5}$ program.

Nitrogen oxides. Based on a review of speciated monitoring data analyses, it is apparent that nitrate concentrations vary significantly across the country. For example, in some southeastern locations, annual average nitrate levels are in the range of 6 to 8 percent of total $PM_{2.5}$ mass, whereas nitrate comprises 40 percent or more of $PM_{2.5}$ mass in certain California locations. Nitrate formation is favored by the availability of ammonia, low temperatures, and high relative humidity. It is also dependent upon the relative degree of nearby SO_2 emissions because ammonia reacts preferentially with SO_2 over NO_X.

The sources of NO_X are numerous and widespread, including motor vehicles, power plants, and many other combustion activities. We believe the previous technical discussion and analysis of speciated air quality data provides an appropriate basis for presuming that states must evaluate and implement reasonable controls on sources of NO_X in all nonattainment areas. Under this policy, States are required to address NO_X under all aspects of the program, unless the State and EPA makes a finding that NO_X emissions from sources in the State do not significantly contribute to the $PM_{2.5}$ problem in a given area or to other downwind air quality concerns. An additional consideration is that the majority of potential $PM_{2.5}$ nonattainment areas are already designated as nonattainment for the 8-hour ozone standard. For $PM_{2.5}$ areas that are also violating the 8-hour ozone standard, strategies to reduce NO_X emissions will help address both air pollution problems. The EPA requests comments on this approach to addressing NO_X emissions under the $PM_{2.5}$ program.

Volatile Organic Compounds (VOC). Section II.B. discusses the main categories of organic compounds with varying degrees of volatility: Highly reactive, volatile compounds with six or fewer carbon atoms which indirectly contribute to PM formation through the formation of oxidizing compounds such as the hydroxyl radical and ozone; and semivolatile compounds with between seven and 24 carbon atoms which can exist in particle form and can readily be oxidized to form other low volatility compounds. High molecular weight organic compounds (with 25 carbon atoms or more and low vapor pressure) are emitted directly as primary organic particles and exist primarily in the condensed phase at ambient temperatures. For this reason, these organic compounds will be regulated as primary $PM_{2.5}$ emissions and not VOCs for the purposes of the $PM_{2.5}$ implementation program.

Current scientific and technical information clearly shows that carbonaceous material is a significant fraction of total $PM_{2.5}$ mass in most areas, and that certain aromatic VOC emissions such as toluene, xylene, and trimethyl-benzene are precursors to the formation of secondary organic aerosol. Further, analyses of ambient data

[41] As stated in the May 6, 2005 (70 FR 24282) final transportation conformity rule on $PM_{2.5}$ precursors, on-road emissions of sulfur dioxide would only be addressed in conformity determinations if the state air agency or EPA Regional Administrator found that the on-road emissions are a significant contributor to the area's $PM_{2.5}$ problem or if the area's SIP established a motor vehicle emissions budget for sulfer oxides.

[42] As stated in the May 6, 2005 (70 FR 24282) final transportation conformity rule on $PM_{2.5}$ precursors, on-road emissions of ammonia would also be addressed in conformity determinations before a SIP is submitted and budgets are found adequate or approved if the state air agency or EPA Regional Administrator found that the on-road emissions of ammonia are a significant contributor to the area's $PM_{2.5}$ problem.

indicate that a considerable fraction of the total carbonaceous material is likely from local as opposed to regional sources.

However, while significant progress has been made in understanding the role of gaseous organic material in the formation of organic PM, this relationship remains complex. We recognize that further research and technical tools are needed to better characterize emissions inventories for specific VOC compounds, and to determine the extent of the contribution of specific VOC compounds to organic PM mass.

In light of the factors discussed above, EPA proposes that States are not required to address VOC's as $PM_{2.5}$ nonattainment plan precursors, unless the state or EPA makes a finding that VOC's significantly contribute to a $PM_{2.5}$ nonattainment problem in the State or to other downwind air quality concerns. In proposing this policy, we are mindful of the fact that a majority of areas that have been designated as nonattainment for $PM_{2.5}$ are already designated as nonattainment for the 8-hour ozone standard. Thus, these areas will already be required to evaluate VOC control measures for ozone purposes. (The inventory of VOC as defined here, including gaseous organic compounds, is essentially identical to the inventory of VOC for ozone control purposes.) The few $PM_{2.5}$ areas not designated as nonattainment for the 8-hour ozone standard will not be required to regulate VOC emissions sources unless the State or EPA makes a relevant technical finding. We request comments accompanied by detailed technical supporting information on this proposed policy approach for addressing VOC's under the $PM_{2.5}$ implementation program.

In general. Any State or EPA technical demonstration to modify the presumptive policy approach for ammonia, NO_X, or VOC should be developed well in advance of the SIP submittal date. In addition, the development of such a technical demonstration should include consultation with appropriate State, local, and EPA technical representatives representing air quality and transportation agencies.

III. What Are the Specific Elements of EPA's $PM_{2.5}$ Implementation Program?

A. What classification options are under consideration for $PM_{2.5}$ nonattainment areas?

1. Background

Section 172 of subpart 1 contains the general requirements for SIPs for all nonattainment areas. Section 172(a)(1) states that on or after the date of designation, the Administrator may classify the area for the purpose of applying an attainment date or for some other purpose. Thus, a classification system is allowed under section 172, but is not required for the purposes of implementing a national ambient air quality standard.

If we choose to establish a classification system, the Act states that we may consider certain factors in doing so, such as the severity of nonattainment in such areas, and the availability and feasibility of the pollution control measures that may be needed to achieve attainment. We must publish a notice in the **Federal Register** announcing any classifications and provide for at least 30 days for written comment. Classifications are not subject to notice and comment rulemaking requirements, however, nor are they subject to judicial review until we take any action on plan submissions (under sections 110(k) or 110(l)), or sanctions in cases where the State fails to submit a plan (under section 179).

2. Proposed Options for $PM_{2.5}$ Classifications

This section describes two implementation approaches for classifying or not classifying $PM_{2.5}$ nonattainment areas. The first and preferred option is to not have any classification system. The second option would have a two-tiered classification system, with areas classified as ''moderate'' or ''serious'' based on specific criteria. These options are discussed below.

a. No Classification System Based on Design Values

In today's notice, our preferred option is to not have any system for classifying $PM_{2.5}$ nonattainment areas or assigning attainment dates and control strategy requirements based on the severity of the nonattainment problem (e.g. the area's design value). We believe that an advantage of this approach is that it will provide a relatively simple implementation structure for state implementation of the $PM_{2.5}$ standards. This approach also will allow flexibility to determine attainment dates and control strategies appropriate for each area under Clean Air Act requirements.

We believe that with the variable mix of sources contributing to $PM_{2.5}$ concentrations in various regions of the country and the variable set of appropriate control measures, it may not be advantageous to have a classification system which automatically requires a longer list of control strategies, and allows a later attainment date, for areas with higher current levels of $PM_{2.5}$ pollution.

Under our proposed approach, the State will be required to submit an attainment demonstration for each nonattainment area proposing an attainment date that is as expeditious as practicable for each area. (Attainment date issues are discussed in more detail in section III.C.) In determining what attainment date is considered ''as expeditious as practicable,'' the State will need to demonstrate that it is achieving RFP (see section III.G.), and it will have to adopt rules to implement the RACT and RACM requirements within the nonattainment area (see section III.I.) in order to attain the standard as expeditiously as practicable. In determining an expeditious attainment date, the State will need to take into consideration the air quality improvements that are expected due to other emission reduction programs at the national level (e.g. Tier II vehicle standards, heavy-duty diesel program, etc.), regional level reductions (e.g. NO_X SIP call), any additional regional SO_2 or NO_X reductions that may be achieved under a legislative or regulatory approach, and State level (e.g. Clean Smokestacks legislation in North Carolina).

b. Two-Tiered Classification System

Another option on which we are seeking comment is a two-tiered classification system. Under this approach, areas with higher $PM_{2.5}$ levels (i.e. design values) would qualify for an attainment date extension beyond April 2010 to no later than April 2015. In return, consistent with the approach in subpart 2, part D of Title I for ozone, such areas would be required to include certain mandatory measures in their SIPs.

Definition of serious and moderate areas. This option would establish two nonattainment classification categories: ''moderate'' and ''serious.'' These categories could be based on the severity of nonattainment (e.g., serious areas would be those with a design value above a specific threshold), the attainment date for the area (e.g., serious areas would be those with attainment dates after April 2010), or some other measure. We invite comment on appropriate ways to define moderate and serious areas and request that any recommended approach be accompanied by adequate supporting information.

Under a potential two-tiered classification system, all areas not classified as ''serious'' would be classified as ''moderate.'' However, any

moderate area that needed an attainment date longer than five years would be reclassified to serious. This would ensure that areas with a more persistent $PM_{2.5}$ problem are subject to more stringent requirements, even if they are not one of the areas with the highest current design values. For such areas, the state would be required to request reclassification and ensure that the 2008 attainment SIP submission for the area includes all measures needed to meet serious area requirements.

Serious area requirements. Serious areas would be required to meet RACM and RACT requirements described elsewhere in this notice. The attainment date would be as expeditiously as practicable, but no later than 10 years after designation, depending on the year in which the area would be projected to attain considering existing control requirements and the effect of RACM, RACT and RFP.

Various approaches can be considered for outlining additional requirements for serious areas beyond those required for all areas by subpart 1. More stringent requirements for serious areas could be established for RFP, RACT, and/or RACM.

For RFP, one approach could involve setting a more prescriptive or higher RFP requirement for serious areas from the 2002 base year to the attainment year. For example, the required rate could be a specific annual percentage reduction in direct $PM_{2.5}$ and all $PM_{2.5}$ precursors, analogous to the 3% per year reduction requirement for the 1-hour ozone program in section 182 of the Act. This approach is described among the options in the RFP section of this proposal (see section III.G.5). Progress would be evaluated in 2008 and every 3 years thereafter. An alternative could be to require a specific weighted average annual reduction in direct $PM_{2.5}$ and all precursors, based upon the $PM_{2.5}$ speciation profile for the relevant urban area.

An additional requirement for serious areas could be to define a lower emissions threshold for major sources for purposes of determining applicability for RACT than would apply in moderate areas. Note that the option of a lower threshold for RACT is consistent with only options 1 and 3 proposed in the RACT section of this notice (see section III.I.5). A discussion of possible thresholds is included in that section.

Moderate area requirements. Under this option, ''moderate'' areas would constitute all areas that are not categorized as ''serious.'' They would be required to submit 2008 plans that demonstrate attainment of the standards as expeditiously as practicable, but not later than April 2010.[43] Attainment would be based on implementation of existing measures (e.g. CAIR, mobile source rules, previously adopted state and local measures) and any other measures necessary to meet the RACT, RACM, RFP, and expeditious attainment requirements. (The scope of these requirements will be determined based on which options for these program elements are adopted in the final rule.) The area would be required to provide a demonstration that it had adopted all reasonable controls to ensure expeditious attainment, and that there was no additional collection of reasonable controls (i.e. RACM and RACT) available in the area that would advance the attainment date by at least one year. EPA seeks comment on what would constitute adequate information provided by the State to show that a moderate area has met the RACT, RACM, and RFP requirements and cannot advance the attainment date.

Failure to attain. Under the general authority in section 172(a)(1) to establish a classification system, EPA proposes a process here that is similar to the PM_{10} process included in subpart 4 for addressing areas that fail to attain. With this approach, EPA would have the authority to make a finding of failure to attain within 6 months for any moderate area that fails to attain the standards by April 2010. Once EPA issues such a finding, the area would be automatically ''bumped-up'' to the serious category. The area would then have one year to develop a revised implementation plan and RFP plan in order to attain the standards as expeditiously as practicable, but no later than April 2015.

Any serious area that fails to attain by its attainment date would be subject to the requirements of sections 179(c) and (d) of the Act. EPA would make a finding of failure to attain no later than 6 months after the attainment date and publish a notice in the **Federal Register**. The state would be required to submit an implementation plan revision within one year after publication of the **Federal Register** notice pursuant to section 179(d)(2) of the Act.

Voluntary Bump-Up. Under this option, any area wishing to reclassify from moderate to serious may do so. The Administrator shall publish a notice in the **Federal Register** of any such request and of the action by the Administrator granting the request.

[43] Under this approach, attaining by April 2010 means that the design value for 2007–2009 would attain the standards.

c. Rural Transport Classification

The 8-hour ozone implementation program includes a ''rural transport classification'' for subpart 1 nonattainment areas. In this section we discuss whether an area classification of this type would be appropriate for the $PM_{2.5}$ implementation program in light of the fact that no currently designated $PM_{2.5}$ nonattainment area could meet criteria similar to those that apply to rural transport areas under the ozone implementation program.

Under this potential concept, a $PM_{2.5}$ nonattainment area would qualify for the ''rural transport'' classification if it met criteria similar to those specified for rural transport areas for the 1-hour ozone standard under section 182(h). Section 182(h) defines ''rural transport'' areas as those areas that do not include, and are not adjacent to, any part of a Metropolitan Statistical Area (MSA) or, where one exists, a Consolidated Metropolitan Statistical Area (CMSA). Because OMB issued revised metropolitan area definitions in 2003, EPA suggests that if $PM_{2.5}$ rural transport areas are made possible under the final rule, this geographic criterion would be revised for $PM_{2.5}$ such that a rural transport area could not include or be adjacent to any part of a core-based statistical area (CBSA) or a consolidated statistical area (CSA). Section 182(h) further limits the category to those areas whose own emissions do not make a significant contribution to pollutant concentrations in those areas, or in other areas.

In the event the ozone approach is followed, a State with a $PM_{2.5}$ ''rural transport'' area would need to (1) demonstrate that the area meets the above criteria, (2) demonstrate using EPA approved attainment modeling that the nonattainment problem in the area is due to the ''overwhelming transport'' of emissions from outside the area, and (3) demonstrate that sources of $PM_{2.5}$ and its precursor emissions within the boundaries of the area do not contribute significantly to $PM_{2.5}$ concentrations that are measured in the area or in other areas. Because this is a proposed rule, EPA currently has not developed any modeling guidance for $PM_{2.5}$ rural transport demonstrations.

An area which qualifies for the ''rural transport'' classification would only be required to adopt local control measures sufficient to demonstrate that the area would attain the standard by its attainment date ''but for'' the overwhelming transport of emissions emanating from upwind States. RFP requirements under subpart 1 would

still apply to these areas (see section E of this notice).

As with other nonattainment areas, rural transport nonattainment areas would be subject to NSR, transportation conformity, and general conformity requirements. However, in section M of today's notice, we are soliciting comment on whether it would be appropriate to establish less burdensome NSR requirements in the event that a classification for rural transport areas is adopted in the final rule.[44] Regarding transportation conformity, EPA has issued revised conformity regulations to address the 8-hour ozone and $PM_{2.5}$ standards in separate actions. In general under the current program, nonattainment areas not part of a metropolitan planning organization subject to transportation conformity already have less burdensome requirements. For example, areas without a metropolitan planning organization do not need to conduct emissions analyses for conformity purposes until the time that a federal highway or transit project is proposed within the area (see further discussion of transportation conformity issues in section III.K. of this notice).

Under this potential approach, a State applying for a rural transport classification for an area would need to develop an attainment demonstration that takes into consideration projected emissions reductions from the implementation of local, regional, and national control measures in order to show that it would reach attainment as expeditiously as practicable. Because such an area would need to rely on national or regional reductions to some degree, the State or Tribe should take into consideration the attainment date of contributing nonattainment areas that contribute to the affected area's air quality problem, and the implementation schedule for any regional reduction strategy (such as a regulation to address transported emissions of SO_2 and NO_X), in developing its attainment demonstration. The issues related to interstate transport are also discussed elsewhere in this proposed rulemaking.

In reviewing the currently designated $PM_{2.5}$ nonattainment areas, it appears that all areas are within or adjacent to a CBSA or CSA, and thus would not meet the criteria discussed above. Because of this fact, EPA requests comment on whether this type of classification option is needed at all under the $PM_{2.5}$ implementation program.

B. When are $PM_{2.5}$ attainment demonstrations and SIPs due, and what requirements must they address?

Part D of Title I of the Act sets forth the requirements for SIPs needed to attain the national ambient air quality standards. Part D includes a general subpart 1 which applies to all NAAQS for which a specific subpart does not exist. Because the PM standards were not established until 1997, the nonattainment plan provisions found in section 172 of subpart 1 apply.

Section 172(b) of the Act requires that at the time the Agency promulgates nonattainment area designations, the EPA must also establish a schedule for states to submit SIPs meeting the applicable requirements of section 172(c) and of section 110(a)(2) of the Act. Nonattainment area designations were finalized in December 2004, and a supplemental notice was issued in April 2005. Consistent with section 172(b) of the Act, section 51.1002 of the proposed rule requires the State to submit its attainment demonstration and SIP revision within three years, or by April 2008.

Section 51.1006 of the proposed rule addresses the situation in which an area is initially designated as attainment/unclassifiable but is later designated as nonattainment based on air quality data after the 2001–2003 period. Under such circumstances, the SIP submittal date would be three years from the effective date of the redesignation, and the attainment date would be as expeditiously as practicable but no later than five years from the effective date of the redesignation.

The section 172(c) requirements that States are to address under section 172(c) (including RACT, RACM, RFP, contingency measures, emission inventory requirements, and NSR) are discussed in later sections of this notice. Section 110(a)(2) of the Act requires all States to develop and maintain a solid air quality management infrastructure, including enforceable emission limitations, an ambient monitoring program, an enforcement program, air quality modeling, and adequate personnel, resources, and legal authority. Section 110(a)(2)(D) also requires State plans to prohibit emissions from within the State which contribute significantly to nonattainment or maintenance areas in any other State, or which interfere with programs under part C to prevent significant deterioration of air quality or to achieve reasonable progress toward the national visibility goal for federal class I areas (national parks and wilderness areas). In order to assist States in addressing their obligations regarding regionally transported pollution, EPA has finalized the CAIR to reduce SO_2 and nitrogen oxide emissions from large electric generating units (see section I.E.2. for further discussion).[45]

To date, few states have submitted a SIP revision addressing the section 110(a) requirements for the purposes of implementing the PM standards. The EPA recognizes that this situation is due in part to the fact that there were a series of legal challenges to the PM standards which were not resolved until March 2002, at which time the standards and EPA's decision process were upheld (see section I.B. for further discussion of past legal challenges to the standards). To address the States' continuing obligation to address the requirements of section 110(a), however, section 51.1002 of the proposed rule also requires each State to address the required elements of section 110(a)(2) of the Act in its nonattainment plan SIP revision, if it has not already done so.

C. What are the attainment dates for $PM_{2.5}$ nonattainment areas?

1. Background

Section 172(a)(2)(A) states that the attainment date for a nonattainment area must be ''as expeditiously as practicable, but no later than 5 years from the date of designation for the area.'' Since $PM_{2.5}$ designations were promulgated in December 2004 and have an effective date of April 2005, the initial attainment date for $PM_{2.5}$ areas would be no later than April 2010. For an area with an attainment date of April 2010, EPA would determine whether it had attained the standard by evaluating air quality data from the three previous calendar years (*i.e.* 2007, 2008, and 2009).

Section 172 also states that if EPA deems it appropriate, the Agency may extend the attainment date for an area for a period not greater than 10 years from the date of designation, taking into account the severity of the nonattainment problem in the area, and the availability and feasibility of pollution control measures. (See further discussion of attainment date extensions in section III.C.4.) For any areas that are granted the full five year attainment date extension, the attainment date would be no later than April 2015. For

[44] The Agency is also considering the development of a separate proposed rule on flexible implementation of nonattainment NSR for any areas where transport is the primary cause of the area's nonattainment for any criteria pollutant. Such a proposal would not be dependent on the incorporation of a transport classification in a classification system for a NAAQS.

[45] More information on the Clean Air Interstate Rule is available at: *http://www.epa.gov/cair.*

such areas, EPA would determine whether they have attained the standard by evaluating air quality data from 2012, 2013, and 2014. Section 51.1004 of the proposed regulations addresses the attainment date requirement.

2. Consideration of Existing Measures in Proposing an Attainment Date

As part of their attainment demonstrations, States will need to assess the effect of implementation of existing national and State programs already in place (*e.g.* partial implementation of the CAIR rule, final Acid Rain Program, motor vehicle tier II standards and heavy-duty diesel engine standards, NO_X SIP call, State legislation such as Clean Smokestacks bill in North Carolina), plus the implementation of RACT and RACM in the nonattainment area, to determine what is the most expeditious attainment date for the area. States in this situation will need to first project the emissions reductions expected by 2009 due to national standards, State regulations, and any local measures already being implemented, and then conduct local-scale modeling to project the estimated level of air quality improvement in accordance with EPA's modeling guidance. These assessments and any needed State emission reduction programs will need to be part of the State's 2008 attainment demonstration.

3. Areas May Qualify for Two 1-Year Attainment Date Extensions

Subpart 1 provides for States to request 2 one-year extensions of the attainment date for a nonattainment area under limited circumstances. Section 172(a)(2)(C) of the Act provides that EPA initially may extend an area's attainment date for one year, provided that the State has complied with all the requirements and commitments pertaining to the area in the applicable implementation plan, and provided that the area has had no more than a minimal number of ''exceedances'' of the relevant standard in the preceding year. Because the $PM_{2.5}$ standards do not have exceedance-based forms but are based on 3-year averaging periods, we interpret the air quality test in section 51.1005 to mean that the area would need to have ''clean data'' for the third of the three years that are to be evaluated to determine attainment.[46] By this we mean that for the third year, the air quality for all monitors in the area as analyzed in accordance with Appendix N to 40 CFR Part 50 each must have an annual average of 15.0 μg/m³ or less, and a 98th percentile of 24-hour monitoring values of 65 μg/m³ or less in order to qualify for a 1-year extension. (Given the rounding provisions specified in 40 CFR Part 50, Appendix N, these criteria would be satisfied if the concentrations before final rounding are less than an annual average of 15.05 μg/m³ and a 24-hour value of 65.5 μg/m³.)

For example, suppose an area in violation of the annual standard has an attainment date of April 2010, and its annual average for 2007 was 15.8 and for 2008 was 15.6. If the annual average for the area in 2009 is 14.9, then the 3-year average would be 15.4, and it would not have attained the standard. We interpret section 172(a)(2)(C) as allowing the area to submit a request to EPA for a one-year extension of its attainment date to 2013 (provided the State has also complied with its requirements and commitments) since the 14.9 ambient air quality value in the third year (2009) met the test of being at or below 15.0. Section 51.1005(a) of the proposed regulation addresses the initial one-year attainment date extension.

The air quality measured in 2010 in conjunction with prior data will determine if the area attains the standard, qualifies for a second one-year extension, or does not attain the standard. For example, if the area's annual average for 2011 is 14.3, then its 3-year average for 2009–2011 would be 14.9 and it would have met the annual standard.

If the area's annual average for 2011 is 14.9, however, then its 3-year average for 2009–2011 would be 15.1. In this situation the area would not have attained the standard, but the area would meet the air quality test for the second of the 1-year extensions allowed under section 172(a)(2)(C), because the 2011 annual average was at or below 15.0. Section 51.1005(b) of the proposed rule addresses the second one-year attainment date extension. After obtaining a second one-year extension, the State would evaluate whether the air quality values in 2012, in conjunction with 2010 and 2011 data, bring the area into attainment.

Pursuant to section 172(a)(2)(C), States must submit additional information to EPA to demonstrate that they have complied with applicable requirements, commitments, and milestones in the implementation plan. This information is needed in order for EPA to make a decision on whether to grant a 1-year attainment date extension. The EPA will not be inclined to grant a 1-year attainment date extension to an area unless the State can demonstrate that it has met important requirements contained in the area's implementation plan. States must demonstrate that: (1) Control measures have been submitted in the form of a SIP revision and substantially implemented to satisfy the requirements of RACT and RACM for the area, (2) the area has made emissions reductions progress that represents reasonable further progress (RFP) toward attainment of the NAAQS, and (3) trends related to recent air quality data for the area indicate that the area is in fact making progress toward attainment of the standard. Any decision made by EPA to extend the attainment date for an area will be based on facts specific to the nonattainment area at issue, and will only be made after providing notice in the **Federal Register** and an opportunity for the public to comment.

If an area fails to attain the standard by the attainment date, EPA would publish a finding to this effect in accordance with section 179 of the Act. The area then would be required, within 1 year of publication of this finding, to develop a revised SIP containing additional emission reduction measures needed to attain the standard as expeditiously as practicable. See section III.C.5. below for further discussion.

4. Areas May Submit a SIP Demonstrating That It Is Impracticable To Attain by the 5-Year Attainment Date

As stated previously, under section 172(a)(2)(A), EPA may grant an area an extension of the initial attainment date for a period of one to five years. States that request an extension of the attainment date under this provision of the Act must submit a SIP in 2008 that includes, among other things, an attainment demonstration showing that attainment within 5 years of the designation date is impracticable. It must also show that the area will attain the standard by an alternative date that is as expeditiously as practicable, but in no case later than 10 years after the designation date for the area (i.e. by April 2015 for an area with an effective designation date of April 2005). An appropriate extension in some cases may be only 1 or 2 years—a five-year extension is not automatic upon request.

The attainment demonstration must provide sufficient information to show that attainment by the initial attainment date is impracticable due the severity of the nonattainment problem in the area, the lack of available or feasible control measures, and any other pertinent information which shows that additional time is required for the area to attain the standard. States requesting an extension of the attainment date must also demonstrate that all local

[46] See section 51.1005 of the proposed regulation.

control measures that are reasonably available and technically feasible for the area are currently being implemented to bring about expeditious attainment of the standard by the alternative attainment date for the area. The State's plan will need to project the emissions reductions expected due to federally enforceable national standards, State regulations, and local measures such as RACT and RACM, and then conduct modeling to project the level of air quality improvement in accordance with EPA's modeling guidance. The EPA will not grant an extension of the attainment date beyond the initial five years required by section 172(a)(2)(A) for an area if the State has not thoroughly considered the implementation of all RACM and RACT local control measures for the area (see section III.I for a more detailed discussion of RACT and RACM). EPA also will examine whether the State has adequately considered measures to address intrastate transport of pollution from sources within its jurisdiction. In attainment planning, States have the obligation and authority to address the transport of pollution from one area of the state to another. Any decision made by EPA to extend the attainment date for an area beyond its original attainment date will be based on facts specific to the nonattainment area at issue and will only be made after providing notice in the **Federal Register** and an opportunity for the public to comment.

5. Areas That Fail To Attain or Do Not Qualify for an Attainment Date Extension

Section 179 of the Act requires that EPA publish a finding in the **Federal Register** for areas that fail to attain by their attainment dates, or that fail to qualify for an attainment date extension. Within one year of EPA's determination that the area failed to attain, the State is then required to submit a SIP revision providing for attainment of the standard as expeditiously as practicable in accordance with section 172(a)(2) of the Act. Section 179(d)(3) provides that the SIP revision must include any specific additional measures as may be prescribed by EPA, including ''all measures that can be feasibly implemented in the area in light of technological achievability, costs, and any nonair quality and other air quality-related health and environmental impacts.'' The EPA believes that in considering the factors above, States that fail to attain the standard initially should give greater weight to technologically feasible measures despite the fact that these measures may be more costly than those implemented under the previous plan.

6. Determining Attainment for the $PM_{2.5}$ Standards

The EPA has the responsibility for determining whether a nonattainment area has attained the standard by its applicable attainment date. Section 179(c)(1) of the Act requires EPA to make determinations of attainment no later than 6 months following the attainment date for the area. Under section 179(c)(2), EPA must publish a notice in the **Federal Register** identifying those areas which failed to attain by the applicable attainment date. The statute further provides that EPA may revise or supplement its determination of attainment for the affected areas based upon more complete information or analysis concerning the air quality for the area as of the area's attainment date.

Section 179(c)(1) of the Act provides that the attainment determination for an area is to be based upon an area's ''air quality data as of the attainment date.'' The EPA will make the determination of whether an area's air quality is meeting the $PM_{2.5}$ NAAQS by the applicable attainment date primarily based upon data gathered from the air quality monitoring sites which have been entered into EPA's Air Quality System (AQS) database. No special or additional SIP submittal will be required from the State for this determination.

A $PM_{2.5}$ nonattainment area's air quality status is determined in accordance with appendix N of 40 CFR part 50. To show attainment of the 24-hour and annual standards for $PM_{2.5}$, the most recent three consecutive years of data prior to the area's attainment date must show that three-year average $PM_{2.5}$ concentrations are at or below the levels of the standards. A complete year of air quality data, as described in part 50, Appendix N, is comprised of all 4 calendar quarters with each quarter containing data from at least 75 percent of the scheduled sampling days. The annual standard for $PM_{2.5}$ is attained when the 3-year average annual mean concentration is less than or equal to 15.0 $\mu g/m^3$. The 24-hour standard for $PM_{2.5}$ is met when the average of 98th percentile values for three consecutive calendar years at each monitoring site is less than or equal to 65 $\mu g/m^3$.

The EPA will begin processing and analyzing data related to the attainment of $PM_{2.5}$ areas immediately after the applicable attainment date for the affected areas. Current EPA policy, under 40 CFR part 58, sets the deadline for submittal of air quality data into the AQS database for no later than 90 days after the end of the calendar year.

While EPA may determine that an area's air quality data indicates that an area may be meeting the $PM_{2.5}$ NAAQS for a specified period of time, this does not eliminate the State's responsibility under the Act to adopt and implement an approvable SIP. If EPA determines that an area has attained the standard as of its attainment date, the area will remain classified as nonattainment until the State has requested, and EPA has approved, redesignation to attainment for the area.

In order for an area to be redesignated as attainment, the State must comply with the five requirements listed under section 107(d)(3)(E) of the Act. Among other things, section 107(d)(3)(E) requires that EPA determine that an area has met the $PM_{2.5}$ NAAQS and that the State has submitted a SIP for the area which has been approved by EPA.

7. How Do Attainment Dates Apply to Indian Country?

The Tribal Authority Rule (TAR) at 40 CFR 49.9 provides guidelines by which Tribes may implement air quality programs in a similar manner as States. However, Tribes choosing to implement their own air quality programs are not required to meet the same schedules and deadlines that apply to States, including attainment dates for NAAQS.

In situations where a Tribe chooses to not implement its own air quality program or any element thereof, EPA is required under the TAR to develop a Federal Implementation Plan (FIP) as necessary and appropriate. 40 CFR 49.11. Because public health considerations are of utmost concern, we believe that any FIP for tribal lands should provide for an attainment date that is as expeditious as practicable. Therefore, EPA will work in consultation with the Tribes to ensure that implementation of the standards is conducted as soon as possible taking into consideration the needs of the Tribes, and to ensure that attainment in other jurisdictions is not adversely affected.

D. What Are the Incentives for Achieving Early Reductions of $PM_{2.5}$ and Its Precursors?

There are significant regulatory incentives for achieving early local area emissions reductions. Areas with design values just over the level of the standard may be able to achieve reductions in the local area or in the State so that, when their effect is considered in combination with reductions achieved under national programs, they may be sufficient to attain the standards before

SIPs are due in 2008. For example, if monitoring in a nonattainment area shows that the air quality for 2004–2006 meets the standards, then the area may be subject to reduced regulatory requirements and be redesignated as ''attainment.'' EPA issued a ''Clean Data'' policy memorandum in December 2004 describing possible reduced regulatory requirements for areas that attain the standards early, but have not yet been redesignated as attainment.[47] For example, the area also would be relieved of the requirements to implement the nonattainment NSR program otherwise required for nonattainment areas, and instead would implement the PSD program.

Another regulatory incentive for early emissions reductions is credit toward RFP requirements. We issued a guidance memorandum designating 2002 as the base year for emissions inventories for $PM_{2.5}$ and 8-hour ozone attainment plans and for regional haze implementation plans.[48] For $PM_{2.5}$, States therefore can take credit for emissions reductions achieved after 2002 in meeting their requirements for RFP. In addition, when developing attainment demonstrations, States should account for these reductions when establishing baseline control scenarios for assessing what additional reductions might be needed to attain the standards.

Examples of possible early reduction programs include efforts to reduce diesel engine emissions (e.g. Clean School Bus USA, retrofits for trucks, locomotives, construction equipment, and marine vessels such as ferries, and diesel idling emissions programs); programs to reduce auto emissions through reduced vehicle miles traveled and improving maintenance of high emitting vehicles; implementation and enforcement of regulations to reduce emissions from burning activities (such as smoke management programs, wood stove retrofit programs, and ordinances to ban open burning of waste or debris from land clearing); energy conservation programs that can reduce demand from power plants; improved emission controls on stationary sources; and improved compliance assurance monitoring to ensure that stationary source emissions are maintained at the levels demonstrated during emissions performance tests. Additional discussion of possible emission reduction strategies which could be introduced early is included in section III.I. on RACM and RACT.

E. How Should the States and EPA Balance the Need To Address Long-Range Transport of Fine Particle Pollution With the Need for Local Emissions Reductions When Implementing the $PM_{2.5}$ Standards?

1. Clean Air Act Provisions for Achieving Local and Regional Emissions Reductions

Section I provides background on $PM_{2.5}$ monitoring data, the geographic distribution of potential nonattainment areas, and the estimated population affected. It also includes a discussion of the regional nature of the $PM_{2.5}$ problem.

Section 172(a)(2) of the Act requires States to attain the standards as expeditiously as practicable but within five years of designation (i.e. attainment date of April 2010 based on air quality data for 2007–2009), or within up to ten years of designation (i.e. to 2015) if the EPA Administrator extends an area's attainment date by 1–5 years based upon the severity of the nonattainment problem and/or the feasibility of implementing control measures.

Virtually all nonattainment problems appear to result from a combination of local emissions and transported emissions from upwind areas. The structure of the CAA requires EPA to develop national rules for certain types of sources which are also significant contributors to local air quality problems, including motor vehicles and fuels. It also provides for States to address emissions sources on an area-specific basis through such requirements as RACT, RACM, and RFP.

We believe that to attain the $PM_{2.5}$ standards, it is important to pursue emissions reductions simultaneously on the local, regional, and national levels. As discussed in more detail in section III.I. on RACM and RACT requirements, States will need to evaluate technically and economically feasible emission reduction opportunities at the local level and determine which measures can be reasonably implemented within the nonattainment area. Local and regional emission reduction efforts should proceed concurrently and expeditiously.

In addition, reductions in pollutants that contribute to $PM_{2.5}$ can provide concurrent benefits in addressing a number of air quality problems—such as ozone, regional haze, urban visibility, and toxic air pollutant problems—by reducing common pollutants. Such is the case with programs to reduce diesel emissions, for example. While diesel engines collectively are large sources of NO_X and direct PM emissions, they also emit significant amounts of toxic air pollutants.[49] Similarly, many sources and activities which lead to direct emissions of organic and elemental carbon (such as open burning and residential wood combustion) also are key sources of toxic air pollutants (i.e. polycyclic aromatic hydrocarbon emissions), and contribute to regional haze as well. Thus, programs and strategies designed to reduce local emissions of PM and its precursors can help reach attainment for the $PM_{2.5}$ standards and provide other air quality benefits as well.

2. Regional Emission Reduction Strategies

As stated earlier in section II, the principal regional pollutants contributing to downwind $PM_{2.5}$ concentrations in the eastern U.S. are SO_2 and NO_X. Sulfate formed from SO_2 accounts for about 30–50 percent of $PM_{2.5}$ mass in most eastern locations, while ammonium nitrate formed from NO_X accounts for 6 percent to more than 20 percent in some locations. The EPA implemented phase II of the Acid Rain Program in 2000, setting an emissions cap of 8.95 million tons of SO_2 and bringing the average emission rate for power plants to a level of 1.2 lbs per mmBTU. However, EPA analyses have shown that sulfate and nitrate contribute to nonattainment problems significantly and will remain a large percentage of $PM_{2.5}$ concentrations in the eastern U.S. even after full implementation of the Acid Rain Program. In order to address health and environmental problems associated with $PM_{2.5}$, ozone, and mercury deposition, the President has proposed the Clear Skies Act. [The Clear Skies Act of 2003 was introduced in the U.S. House of Representatives (H.R. 999) and the U.S. Senate (S. 485) on February 27, 2003.] It is designed to achieve significant reductions in SO_2, NO_X, and mercury emissions from power plants. (For more information, see section I.E.1. above.)

[47] Memorandum of December 14, 2004, from Steve Page, Director, EPA Office of Air Quality Planning and Standards to EPA Air Division Directors, ''Clean Data Policy for the Fine Particle National Ambient Air Quality Standards.'' This document is available at: *http://www.epa.gov/pmdesignations/guidance.htm.*

[48] Memorandum of November 18, 2002, from Lydia Wegman and Peter Tsirigotis, ''2002 Base Year Emission Inventory SIP Planning: 8-hr Ozone, $PM_{2.5}$ and Regional Haze Programs.'' This document is available at the following web site: *http://www.epa.gov/ttn/oarpg/t1/memoranda/2002bye_gm.pdf.*

[49] USEPA, 2002. Health Assessment Document for Diesel Engine Exhaust. The EPA/600/8–90/057F. 01 May 2002. U.S. Environmental Protection Agency, Office of Research and Development, National Center for Environmental Assessment, Washington, DC. Available on EPA's Web site: *http://cfpub.epa.gov/ncea/.*

Because it is uncertain whether the CSA will be enacted, EPA established the CAIR under the existing CAA to achieve regional reductions of SO_2 and NO_X. (See section I.E.2. for a discussion of CAIR.) The CAA requires States to develop SIPs that provide for attainment by deadlines in the CAA and requires States to have implementation plans that prohibit emissions that contribute significantly to nonattainment in other States. As described in the **Federal Register** actions for the NO_X SIP call and section 126 rulemakings, EPA believes it has the authority under the CAA to define what States need to do to address the interstate transport requirements of section 110 in advance of the submission of nonattainment area SIPs. The CAIR program will help many cities throughout the region meet the $PM_{2.5}$ standards or make significant progress toward attainment.

Air quality modeling analyses in support of the final CAIR rule show that of the 36 areas currently designated nonattainment for $PM_{2.5}$ in the eastern United States, 17 areas are projected to attain the standards by 2010 with implementation of CAIR and other existing federal and state measures. By 2015, 22 areas are projected to attain the standards. While the air quality benefits from implementation of CAIR and other programs are significant, it is also evident that in some areas local emission reduction measures will serve an important role in addressing the $PM_{2.5}$ nonattainment problem.

3. The Role of Local and State Emission Reduction Efforts in Reducing Health Risks and Achieving the $PM_{2.5}$ Standards

As discussed above, the implementation of regional and national strategies (such as CAIR and various mobile source programs) are expected to provide significant air quality improvements for $PM_{2.5}$ nonattainment areas. At the same time, analyses for the final CAIR rule indicate that without implementation of local measures, approximately 14 to 19 areas would be projected to remain in $PM_{2.5}$ nonattainment status in the 2010–2015 timeframe. Thus, EPA believes that local and State emission reduction efforts will need to play an important role in addressing the $PM_{2.5}$ problem as well. EPA intends to work closely with States, Tribes, and local governments to develop appropriate in-state pollution reduction measures to complement regional and national strategies to meet the standards expeditiously and in a cost-effective manner.

Many types of emissions sources contribute to the PM problem, and in many cases cost-effective measures are available to reduce their emissions. Examples of possible local measures are discussed in the previous section III.D. on early reductions, as well as in section III.I. on RACT and RACM. The EPA has also provided grant funding to STAPPA/ALAPCO to develop a ''menu of options'' document to provide State and local agencies and the general public with additional information on sources of emissions, potential control measures, and their associated costs and air quality benefits.

EPA encourages States to implement technologically available and economically feasible local measures expeditiously. States can adopt a number of programs now, or expand their level of implementation of existing programs, in order to achieve local area emissions reductions in the near term. While regional emissions reductions may have a lower cost per ton of emissions reduced than many local reductions, local reduction opportunities may be more readily available, they may be more feasible to implement in a shorter period of time than a broad regional emissions trading program, and they may have high benefits per ton of emission reduction. In addition, local emissions reductions can be especially beneficial in reducing exposure to air pollution for dense urban populations. Thus, by taking action in advance of the date that regional reductions may be achieved, local communities can enjoy the benefits of improved public health (including a reduction in health care costs).

Preliminary EPA analyses [50] show that if local emissions reductions (e.g., including SO_2 and other local emissions) were obtained only from sources located within metro areas projected to be nonattainment, the average air quality improvement in these cities would be 1.26 $\mu g/m^3$, and the number of counties projected to have violating monitors in 2010 would decrease from 61 to 26. These analyses also show that if local emissions reductions were limited to pollutants other than SO_2, the average air quality improvement in these cities would be 0.37 $\mu g/m^3$, and the number of counties projected to have violating monitors in 2010 would decrease from 61 to 48. Thus, these analyses support the conclusion that emissions reductions due to regional and national programs such as CAIR and recently promulgated national rules for mobile sources will make important contributions to attainment for many eastern nonattainment areas. In the absence of regional controls on upwind sources, downwind States would be forced to obtain greater emissions reductions, and incur greater costs, to offset the transported pollution from upwind sources. At the same time, this preliminary analysis also illustrates that local emissions reductions can be beneficial, and have the potential to bring a number of metropolitan areas into attainment.

EPA believes that expeditiously achieving the $PM_{2.5}$ reductions that are available from reasonable local controls is important because, as discussed in section I.A., the effects of $PM_{2.5}$ on public health are serious. Estimates suggest that each year tens of thousands of people die prematurely from exposure to $PM_{2.5}$, and many hundreds of thousands more people experience significant respiratory or cardiovascular effects. Even small reductions in $PM_{2.5}$ levels may have substantial health benefits on a population level. For example, in a moderate-sized metropolitan area with a design value of 15.5 $\mu g/m^3$, efforts to improve annual average air quality down to the level of the standard (15.0 $\mu g/m^3$) may be expected to result in as many as 25–50 fewer mortalities per year due to air pollution exposure. In a smaller city, the same air quality improvement from 15.5 to 15.0 $\mu g/m^3$ still may be expected to result in a number of avoided mortalities per year. These estimates are based on EPA's standard methodology for calculating health benefits as used in recent rulemakings.[51]

The benefits of $PM_{2.5}$ control also are significant in dollar terms. Depending on the particular emission controls on sources of $PM_{2.5}$ precursor emissions, EPA has estimated that the monetized health benefits of reducing emissions of pollutants that lead to $PM_{2.5}$ formation exceed the costs by 3 to over 30 times.[52]

[50] See discussion of local control measures in the proposed CAIR, 69 FR 4596–4599, and associated supporting information (docket #OAR–2003–0053, item #OAR–2003–0053–0162, Technical Support Document for the CAIR, Modeling Analyses).

[51] These estimates are based on the relative risk for all-cause mortality from the Pope et al. 2002 analysis of the American Cancer Society cohort. The EPA standard methodology for estimating health benefits has been used in developing regulatory impact analyses for a number of regulations. Most recently, this methodology was used in support of the CAIR (docket #OAR–2003–0053, item #OAR–2003–0053–0175, Benefits of the Proposed CAIR, January 2004).

[52] U.S. EPA, 2005. Regulatory Impact Analysis for the Clean Air Interstate Rule. EPA 452/–03–001. Prepared by Office of Air and Radiation. Available at: *http://www.epa.gov/interstateairquality/tsd0175.pdf.* See also: U.S. Environmental Protection Agency, 2004. Final Regulatory Analysis: Control of Emissions from Nonroad Diesel Engines. EPA420–R–04–007. Prepared by Office of Air and Radiation. Available at *http://www.epa.gov/nonroad-diesel/2004fr/420r04007.pdf.*

As discussed in more detail in section III.I. on RACM and RACT requirements, States will need to evaluate technically and economically feasible emission reduction opportunities at the local level and determine which measures can be reasonably implemented within the nonattainment area. To avoid the public health consequences of delayed improvements in $PM_{2.5}$ concentrations, we believe that local and regional emission reduction efforts should proceed concurrently and expeditiously.

Although direct emissions may appear relatively small in tonnage terms, States should not overlook reductions of direct local emissions, particularly carbonaceous emissions. Monitoring data show that many urban areas have higher levels of carbonaceous $PM_{2.5}$ than rural areas. Based on information developed by EPA in support of regulations on diesel engines, the population weighted impact per ton of direct PM diesel emissions reduced is estimated to be about 9–14 times more effective in reducing health effects as compared to SO_2 and NO_X reductions from the same sources.[53] This analysis reflects the fact that by definition, all of the direct fine particle emissions contribute to $PM_{2.5}$ concentrations, but only a fraction of the SO_2 and NO_X emissions undergo reactions in the atmosphere to become $PM_{2.5}$.

In addressing a nonattainment area having military training, testing and operational activities occurring within it, the State should not need to target these activities for emission reductions. Regarding prescribed burning activities, EPA intends to continue implementation of the Interim Air Quality Policy on Wildland and Prescribed Fires.[54]

4. Addressing Regionally Transported Emissions in Local Area Attainment Demonstrations

As discussed in section III.C., the CAA requires States with $PM_{2.5}$ nonattainment areas to attain the standards as expeditiously as practicable, but no later than within five years of designation (e.g., April 2010). If the State provides an adequate demonstration showing that it cannot attain the standards within five years, based on the severity of the area's problem, the availability of control measures, and the feasibility of implementing controls, then EPA may grant the area an attainment date extension of one to five years.

Now that the multi-state CAIR emission reduction program has been adopted well before the $PM_{2.5}$ SIPs are due, it will be important for affected States to take into account the incremental projected emissions reductions resulting from that program in assessing the degree of air quality improvement that can be expected in the State and the projected timetable for those reductions to be realized.

Experience with implementation of the cap-and-trade and emissions banking provisions of the Acid Rain Program has shown that certain sources likely will take steps to reduce emissions and ''bank'' emissions allowances prior to the date that compliance with the initial emissions cap is required.

Under a trading program with an emissions banking provision, we estimate that SO_2 emissions will be reduced on a steadily decreasing glidepath rather than a stair step pattern. By 2009, the last year prior to the 2010 attainment year, a portion of the total regional SO_2 emissions reductions expected under CAIR would be realized. In developing their SIPs, States should use existing projections of the geographic distribution and magnitude of early emissions reductions that are expected to be achieved by 2009 using existing information from the IPM emissions projection model. They should also assess the associated impact of these reductions on air quality by using a regional air quality model. We encourage the States to use existing analyses to the extent possible to project interim air quality improvements from regional emissions reduction strategies, and we commit to working with the States and regional planning organizations to evaluate the expected air quality improvements from CAIR. In addition, states must assess the effect of potential RACM, including RACT, in determining an appropriate attainment date. We will work with the States as they develop attainment demonstrations and SIPs designed to attain the standards as expeditiously as practicable, taking into account emissions reductions from broad regional programs (such as the CAIR and NO_X SIP Call); national measures such as new emissions standards for cars and trucks; and other cost effective State and local strategies which may advance the attainment date.

F. How Will EPA Address Rrequirements for Modeling and Attainment Demonstration SIPs When Implementing the 24-Hour and Annual Aaverage $PM_{2.5}$ Standards?

1. Introduction

Section 172(c) requires States with nonattainment areas to submit an attainment demonstration. An attainment demonstration consists of: (1) Technical analyses that locate, identify, and quantify sources of emissions that are contributing to violations of the $PM_{2.5}$ NAAQS; (2) analyses of future year emissions reductions and air quality improvement resulting from already-adopted national and local programs, and from potential new local measures to meet the RACT, RACM, and RFP requirements in the area; (3) adopted emission reduction measures with schedules for implementation; and (4) contingency measures required under section 172(c)(9) of the CAA. with a nonattainment area will have to submit a SIP with an attainment demonstration that includes analyses supporting the State's proposed attainment date. The State must show that the area will attain the standards as expeditiously as practicable, and it must include an analysis of whether implementation of reasonably available measures will advance the attainment date.

2. Areas That Need To Conduct Modeling

Some areas having design values close to the standard may be projected to come into attainment within five years based on modeling analyses of national and regional emission control measures that are scheduled to occur through 2009. Regional scale modeling for national rules such as the Tier II motor vehicle standards, the Heavy-duty Engine standards and the Nonroad Engine standards indicate major reductions in $PM_{2.5}$ by 2010. A portion of these benefits will occur in the 2004–2009 $PM_{2.5}$ attainment timeframe.

Experience with past ozone attainment demonstrations has shown that the process of performing detailed photochemical grid modeling to develop an attainment demonstration can be very resource intensive for States. The EPA believes that it would be appropriate for States to leverage resources by collaborating on modeling analyses to support SIP submittals, or by making use of recent modeling analyses that have already been completed. For this reason, EPA proposes that States may use in a $PM_{2.5}$ attainment demonstration certain local, regional and/or national modeling analyses that

[53] ''Estimated NO_X, SO_2, and PM Emissions Health Damages for Heavy-duty Vehicle Emissions.'' April 22, 2002. Memorandum by Bryan Hubbell, EPA Office of Air Quality Planning and Standards, to docket A–2000–01, docket item IV–A–146.

[54] USEPA, ''Interim Air Quality Policy on Wildland and Prescribed Fires,'' memorandum from Richard Wilson, Acting Assistant Administrator for Air and Radiation, to Regional Administrators, May 15, 1998.

have been developed to support Federal or local emission reduction programs, provided the modeling meets the attainment modeling criteria set forth in EPA's modeling guidance (described below). As with all SIPs under subpart 1, the State must demonstrate that the area will attain the $PM_{2.5}$ standards as expeditiously as practicable. As part of this demonstration, the State must evaluate those technically and economically feasible measures in the nonattainment area in order to determine whether, if implemented together, these measures would advance the attainment date. (This evaluation of local measures may or may not involve additional modeling.) The EPA proposes that if the State can rely on existing modeling analyses as part of its attainment demonstration, it should reference appropriate reports on that modeling which are readily available, or include the modeling documentation in its submittal. In such situations, the State must provide an explanation describing how it meets the criteria for attainment-level modeling, and why the existing modeling is appropriate for use as part of the attainment demonstration. The EPA requests comment on this proposed approach for using existing air quality modeling analyses in attainment demonstrations, where appropriate.

Nonattainment areas would be required to submit an attainment demonstration SIP that includes new modeling showing attainment of the standards as expeditiously as practicable. The new modeling will need to include additional emissions controls or measures in order to demonstrate attainment.

3. Modeling Guidance

Section 110(a)(2)(K)(i) states that SIPs must contain air quality modeling as prescribed by the Administrator for the purpose of predicting the effect of emissions on ambient air quality. The procedures for modeling $PM_{2.5}$ as part of an attainment SIP are contained in EPA's ''DRAFT Guidance for Demonstrating Attainment of Air Quality Goals for $PM_{2.5}$ and Regional Haze.'' [55] The EPA welcomes public comments on the guidance at any time and will consider those comments in any future revision of the document. Comments submitted on the modeling guidance document should be identified as such and will not be docketed as part of this rulemaking, nor will a comment/response summary of these comments be a part of the final $PM_{2.5}$ implementation rule since they will not affect the rule itself. The final version of the guidance is scheduled for release in 2005 and will be posted on EPA's web site (*http://www.epa.gov/ttn/scram/*).

The draft modeling guidance describes how to estimate whether a control strategy to reduce emissions of particulate matter and its precursors will lead to attainment of the annual and 24-hour $PM_{2.5}$ NAAQS. Part I of the guidance describes a ''modeled attainment test'' for the annual and 24-hour $PM_{2.5}$ NAAQS. Both tests are similar. The output of each is an estimated future design value consistent with the respective forms of the NAAQS. If the future design value does not exceed the concentration of $PM_{2.5}$ specified in the NAAQS, the test is passed. The modeled attainment test applies to locations with monitored data.

A separate test is recommended to examine projected future year $PM_{2.5}$ concentrations in unmonitored locations.[56] Interpolated $PM_{2.5}$ ambient data combined with modeling data can be used to predict $PM_{2.5}$ concentrations in unmonitored areas. The details of such an analysis will be contained in the final modeling guidance.

States may use other analyses in addition to the modeled attainment test and hot spot analysis to estimate whether future attainment of the NAAQS is likely. Attainment is likely if a preponderance of evidence suggests so. This procedure is called a ''weight of evidence determination.''

Reliability of recommended tests for estimating future attainment depends on having reliable data bases. The guidance identifies and prioritizes key data gathering activities and analytical capabilities which will increase credibility of analyses used to estimate if the air quality goals for $PM_{2.5}$ will be met.

Part II of the guidance describes how to apply air quality models to generate results needed by the modeled tests for attainment. This includes developing a conceptual description of the problem to be addressed; developing a modeling/analysis protocol; selecting an appropriate model to support the demonstration; selecting appropriate meteorological episodes or time periods to model; choosing an appropriate area to model with appropriate horizontal/vertical resolution; generating meteorological and air quality inputs to the air quality model; generating emissions inputs to the air quality model; evaluating performance of the air quality model; and performing diagnostic tests. After these steps are completed, the model is used to simulate effects of candidate control strategies.

EPA is not recommending a specific model for use in the attainment demonstration for the $PM_{2.5}$ NAAQS. At present, there is no single model which has been extensively tested and shown to be clearly superior to other available models. The current modeling guideline, 40 CFR part 51, appendix W does not identify a ''preferred model'' for use in attainment demonstrations of the NAAQS for $PM_{2.5}$. Thus, States may choose from several alternatives. The EPA's draft modeling guidance provides a set of general requirements which an air quality model should meet to qualify for use in an attainment demonstration for the $PM_{2.5}$ NAAQS. These include having received a scientific peer review, being applicable to the specific application on a theoretical basis, and having an adequate data base to support its application.

In some cases, multiple models may need to be applied in the attainment demonstration. In most cases, a photochemical grid model is needed to treat secondary particulate matter. Photochemical grid models can also be used to treat primary particulate. In high concentration areas of primary particulate, however, a Gaussian plume model or puff model may also be needed to more accurately represent steep concentration gradients. The modeling guidance provides details and recommendations on using multiple models.

The application of air quality models requires a substantial effort by State agencies and EPA. Therefore, States should work closely with the appropriate U.S. EPA Regional Offices in executing each step of the modeling process. By doing so, it will increase the likelihood of EPA approval of the State demonstration submitted at the end of the modeling and overall SIP development process.

4. Modeled Attainment Test

The two modeled attainment tests for the annual and 24-hour standards use monitored data to estimate current air quality. The attainment test for a given standard is applied at each monitor location within or near a designated nonattainment area for that standard. There is also an additional attainment test to be performed in unmonitored areas. Models are used in a relative sense to estimate the response of

[55] ''DRAFT Guidance for Demonstrating Attainment of Air Quality Goals for $PM_{2.5}$ and Regional Haze'' can be found at: *http://www.epa.gov/scram001/guidance/guide/draft_pm.pdf.*

[56] The unmonitored area attainment test will be limited to locations which are appropriate to allow the comparison of predicted $PM_{2.5}$ concentrations to the NAAQS, based on $PM_{2.5}$ monitor siting requirements and recommendations.

measured air quality to future changes in emissions. Future air quality is estimated by multiplying current monitored values times modeled responses to changes in emissions. Because $PM_{2.5}$ is a mixture of chemical components, States should use current observations and modeled responses of major components of $PM_{2.5}$ to estimate future concentrations of each component. The predicted future concentration of $PM_{2.5}$ is the sum of the predicted component concentrations.

Direct application of the modeled attainment tests requires speciated $PM_{2.5}$ ambient data co-located with FRM sites. However, there will not be speciation monitors at every FRM site. In fact, speciation monitors are only located at approximately 20 percent of the FRM monitoring sites. Therefore EPA is developing a refinement of the modeled attainment test that uses interpolated ambient speciation data to calculate current values of $PM_{2.5}$ species at all of the FRM monitoring sites. Gridded spatial fields of interpolated speciated $PM_{2.5}$ data are created in order to estimate the species fractions at each FRM site. This information, combined with modeling results, may be used to calculate future air quality at each FRM monitoring site.

An application of this methodology was employed and documented as part of EPA's Clean Air Interstate Rule (CAIR). The final modeling guidance will contain default recommendations for the disaggregation and treatment of $PM_{2.5}$ species for the purpose of applying the modeled attainment test.

5. Multi-Pollutant Assessments and One-Atmosphere Modeling

A multi-pollutant assessment, or one-atmosphere modeling, is conducted with a single air quality model that is capable of simulating transport and formation of multiple pollutants simultaneously. For example, this type of model simulates the formation and deposition of $PM_{2.5}$, ozone, and regional haze components, and it includes algorithms simulating gas phase chemistry, aqueous phase chemistry, aerosol formation, and acid deposition.

Multipollutant assessments are recommended for $PM_{2.5}$ attainment demonstrations because the formation and transport of $PM_{2.5}$ is closely related to the formation of both regional haze and ozone. The components of $PM_{2.5}$ account for the vast majority of visibility impairment associated with regional haze. For any given mass, fine particles are more efficient at scattering light than particles larger than 2.5 micrometers in diameter, and certain components of $PM_{2.5}$ are more efficient at scattering or absorbing light than others. The most efficient light-scattering particle types are secondary particulate species such as sulfates and nitrates. Primary particles composed of crustal and other inorganic material are less efficient at scattering light. Secondary particulate matter comprises a significant fraction of measured $PM_{2.5}$ in most parts of the country, and therefore is a significant contributor to regional haze. The impact of fine particles on visibility is enhanced still further by high relative humidity, which is especially relevant in the Eastern U.S., because sulfates and nitrates commonly absorb water and grow to sizes comparable to the wavelengths of visible light.

There is often a positive correlation between measured ozone and secondary particulate matter. Many of the same factors affecting concentrations of ozone also affect concentrations of secondary particulate matter. For example, similarities exist in sources of precursors for ozone and secondary particulate matter. Emissions of NO_X may lead to formation of nitrates as well as ozone. Sources of VOC may be sources or precursors for both ozone and organic particles. Presence of ozone itself may be an important factor affecting secondary particulate formation. For example, as ozone builds up, hydroxyl (OH) radicals do also as a result of equilibrium reactions between ozone, water and OH in the presence of sunlight. Hydroxyl (OH) radicals are instrumental in oxidizing gas phase SO_2 to sulfuric acid, which is eventually absorbed by liquid aerosol and converted to particulate sulfate in the presence of ammonia. SO_2 also reacts with ozone and hydrogen peroxide (a byproduct of photochemistry), in the aqueous phase, to form particulate sulfate. Hydroxyl radicals and NO are also precursors for gas phase nitric acid, which is absorbed by liquid aerosol and, in the presence of ammonia, leads to particulate nitrate.

Strategies to reduce ozone can also affect formation of secondary PM. Reducing VOC emissions could reduce ozone, OH, and/or hydrogen peroxide. If sulfate or nitrate production is limited by lack of availability of oxidizing agents, the ozone reduction strategy could also reduce secondary PM. Recent research has also shown increased secondary organic aerosol concentrations in the presence of acid aerosols. Reductions in oxidizing agents may lead to lower concentrations of sulfate and/or nitrate which may lead to reduced levels of secondary organic aerosols. Control of certain VOCs [57] may also reduce secondary organic aerosols by reducing their semi-volatile precursors. Reducing NO_X emissions diminishes one of the precursors for nitric acid (*i.e.*, NO_2 which results from NO). Therefore, in the presence of sufficient ammonia, reducing NO_X emissions could reduce particulate nitrate concentrations. There are also more subtle interfaces between strategies to reduce ozone and to reduce secondary particulate matter. For example, reducing NO_X in the presence of substantial particulate sulfates and lack of sufficient ammonia could in some cases exacerbate the particulate sulfate problem, or reducing SO_2 in the presence of substantial NO_X and ammonia could in some cases exacerbate the particulate nitrate problem.

Therefore, models and data analysis intended to address $PM_{2.5}$ should also address visibility impairment. These models also need to be capable of simulating transport and formation of ozone. At a minimum, modeling should include previously implemented or planned measures to reduce ozone, PM, and visibility impairment. An integrated assessment of the impact controls have on ozone, $PM_{2.5}$, and regional haze provides safeguards to ensure that optimal emission reduction strategies are developed for the three programs to the extent possible. States that undertake multi-pollutant assessments as part of their attainment demonstration should assess the impact of their $PM_{2.5}$ strategies on visibility and ozone, or perform a consistent analysis for $PM_{2.5}$,visibility, and ozone. To facilitate such an effort, EPA encourages States to work closely with established regional haze Regional Planning Organizations (RPOs) and the jurisdictions responsible for developing ozone implementation plans.

6. Which Future Year(s) Should be Modeled?

The concept of simultaneously modeling control impacts on $PM_{2.5}$, regional haze, and ozone may be further facilitated by the alignment of the implementation process for ozone, regional haze, and $PM_{2.5}$. To the extent that dates for attainment demonstration SIPs coincide, the practicality of using common data bases and analysis tools for all three programs becomes more viable and encourages efficient use of resources.

[57] Certain VOCs (especially aromatic compounds) with >6 carbon atoms may form secondary organics aerosols.

In some cases the attainment dates for areas that are classified as nonattainment for both the 8-hour ozone NAAQS and the $PM_{2.5}$ NAAQS will coincide. In other cases they may differ by one or more years. The choice of the future modeling year should take into account the local attainment dates for $PM_{2.5}$ and ozone as well as the attainment dates of nearby nonattainment areas within the State and/or nearby areas or regions. Where possible, future modeling years should be coordinated so that a single year can be used for both $PM_{2.5}$ and ozone modeling. This coordination will help to reduce resources expended for individual modeling applications for $PM_{2.5}$ and ozone and will facilitate simultaneous evaluation of ozone and PM impacts.

Although there is some flexibility in choosing the future year modeling time periods, unless the State believes it cannot attain the standards within five years of the date of designation and must request an attainment date extension, the choice of modeling years for $PM_{2.5}$ cannot go beyond the initial five year attainment period. For example, if a nonattainment area has an ozone nonattainment date that is beyond the 5 year $PM_{2.5}$ period, the area cannot show attainment of the $PM_{2.5}$ NAAQS by modeling the later ozone attainment date. In this case, the State could model an earlier year for both $PM_{2.5}$ and ozone.

Attainment date extensions will only be granted under certain circumstances. Among other things, the State must submit an attainment demonstration showing that attainment within 5 years of the designation date is impracticable. Section III.C. includes further discussion on attainment date issues.

Further details on choosing future modeling years is contained in EPA's draft modeling guidance. Further revisions to the guidance are expected to address the needed flexibility in choosing future modeling years.

7. Mid-Course Review

A MCR is a process by which the State assesses whether a nonattainment area is or is not making sufficient progress toward attainment of the $PM_{2.5}$ standards, as predicted in its attainment demonstration. Such a review would evaluate the most recent monitoring and other data to assess whether the control measures relied on in a State's attainment demonstration have resulted in adequate improvement in air quality.

In reviewing each attainment demonstration, EPA will assess on a case-by-case basis whether a MCR would be needed. EPA will consider a number of factors in making this determination, including: The length of time to the proposed attainment date; the supporting information provided in the attainment demonstration; and uncertainties associated with future projections of pollutant emissions, air quality levels, and related information.

Where EPA finds that a MCR would be required, the approval of the demonstration would be contingent on a commitment from the State to conduct the MCR. For such cases, the EPA believes that a commitment to perform a MCR is a critical element in an attainment demonstration that employs a long-term projection period. Because of the uncertainty in long term projections, EPA believes such attainment demonstrations should contain provisions for periodic review of monitoring, emissions, and modeling data to assess the extent to which refinements to emission control measures are needed.

In reviewing individual attainment demonstrations, EPA will give particular consideration to requiring a MCR for areas that are granted an extension of their attainment date of two years or more beyond the first five year period. For areas where the effective date of designations is April 2005, the MCR requirement would then apply to areas with attainment date extensions to April 2012 to April 2015. The EPA would require submittal of the MCR within five years of the effective date of designations.

The procedure for performing a MCR contains three basic steps: (1) Demonstrate whether the appropriate emission limits and emission reduction programs that were approved as part of the original attainment demonstration and SIP submittal were adopted and implemented; (2) analyze available air quality, meteorology, emissions and modeling data and document relevant findings; and (3) document conclusions regarding whether progress toward attainment is being made using a weight of evidence determination. This determination may or may not include new modeling analyses.

The EPA does not request that States commit in advance to adopt new control measures as a result of the MCR process. Based on the MCR, however, if EPA determines that sufficient progress has not been made, EPA would determine whether additional emissions reductions are necessary from the State or States in which the nonattainment area is located, or from upwind States, or both. The EPA would then require the appropriate State or States to adopt and submit the new measures within a specified period. The EPA anticipates that these findings would be made as calls for SIP revisions under section 110(k)(5), and therefore the period for submission of the measures would be no longer than 18 months after the EPA finding. Thus, States must complete the MCR three or more years before the applicable attainment date to ensure that any additional controls that may be needed can be adopted in sufficient time to reduce emissions by the attainment year.

A number of States previously participated in a consultative process with EPA which resulted in the development of the 1-hour ozone MCR guidance.[58] If a MCR will be required for certain $PM_{2.5}$ nonattainment areas, separate $PM_{2.5}$ MCR guidance will be written to address the specific requirements of $PM_{2.5}$ nonattainment areas.

G. What Requirements for RFP Apply Under the $PM_{2.5}$ Implementation Program?

1. Background

Section 172(c)(2) provides that nonattainment area plans ''shall require reasonable further progress.'' Section 171(1) defines ''reasonable further progress,'' as ''such annual incremental reductions in emissions of the relevant air pollutant as are required by this part or may reasonably be required by the Administrator for the purpose of ensuring attainment of the applicable national ambient air quality standard by the applicable date.'' This section presents how EPA will implement the RFP requirement, and it proposes the criteria by which EPA will judge State submittals addressing this requirement. The approaches proposed here should ensure emissions reductions on a path towards attainment which will yield an incremental improvement in air quality, while being sufficiently flexible to accommodate the range of control strategies necessary to address the complex mixtures of pollutants comprising $PM_{2.5}$ in different areas.

EPA has previously described its interpretation of RFP requirements applicable to particles with a nominal aerodynamic diameter of 10 micrometers and smaller (PM_{10}).[59] The

[58] Memorandum of March 28, 2002, from Lydia N. Wegman and J. David Mobley, re: ''Mid-Course Review Guidance for the 1-Hour Ozone Nonattainment Areas that Rely oin Weight-of-Evidence for Attainment Demonstration.'' Located at URL: *http://www.epa.gov/scram001/guidance/guide/policymem33d.pdf.*

[59] EPA issued general guidance for moderate PM_{10} nonattainment areas in the General Preamble on CAA Title I provisions, published April 16, 1992, at 57 FR 13498. (See 57 FR 13539). Further guidance by EPA (published August 16, 1994 at 59

guidance for serious PM_{10} nonattainment areas included extensive discussion of the need for incremental reductions to provide RFP. According to the criteria described in that guidance, PM_{10} nonattainment areas are expected to implement an ongoing series of measures providing steady progress toward attainment. It is important that reductions needed to attain the standards not be achieved only in the last year or two prior to the attainment date. The EPA believes that these principles should also apply in achieving RFP for the $PM_{2.5}$ standards.

2. What Is the Baseline Year From Which States Will Track Emission Reductions for Meeting RFP Requirements?

EPA issued a memorandum identifying 2002 as the appropriate emission inventory base year for purposes of addressing the RFP and SIP planning requirements under the implementation programs for the 8-hour ozone and the $PM_{2.5}$ standards.[60] The EPA selected 2002 as the appropriate inventory base year for RFP and attainment demonstration purposes for several reasons. First, the inventory for 2002 will be the most recently available consolidated emissions inventory available at the time EPA promulgates $PM_{2.5}$ designations. Under the ''Consolidated Emissions Reporting Rule'' (June 10, 2002, 67 FR 39602), emissions inventories are required every three years, including the years 2002 and 2005.

Second, with a 2002 base year, States will receive credit for reductions from the 2002 base year forward. The policy provides an incentive for State and local agencies to achieve early emissions reductions, and it gives appropriate credit for projected future reductions from certain already-adopted national, regional, and local measures. Third, EPA designated nonattainment areas based on air quality data for the 2001 to 2003 period. Emissions inventories for 2002 should be representative of the period on which States and EPA establish nonattainment area designations. For all these reasons, EPA proposes that the base year inventory for attainment and RFP planning should be 2002.

3. How Does EPA Propose to Address the Pollutants Associated With $PM_{2.5}$ in these RFP Requirements?

Ambient $PM_{2.5}$ is a complex mixture containing multiple components. In many areas more than half of the $PM_{2.5}$ mass collected by speciation monitors arises not from direct particle emissions but rather from emissions of precursors that undergo atmospheric transformation into particles. Section II.E. takes comment on options for addressing $PM_{2.5}$ precursors, and the pollutants required to be addressed in RFP plans will be determined in the final rule. As proposed, the pollutants that are to be addressed in all RFP plans for $PM_{2.5}$ are direct $PM_{2.5}$ (including organic carbon, elemental carbon, and crustal material), sulfur dioxide, and nitrogen oxides. Ammonia and/or VOCs should be addressed in the RFP plan if ammonia and/or VOC emission reduction strategies are included in the attainment demonstration.

4. What Areas Must Submit an RFP Plan?

Under this proposed RFP approach, an area's RFP requirement would be considered to be met if its attainment demonstration (due by April 2008) shows that the area will attain the standards within 5 years of its nonattainment designation (i.e. by April 2010). An area submitting an attainment demonstration indicating that it will not attain by April 2010 must submit an RFP plan by April 2008 along with its attainment demonstration. The RFP plan must show how the area will make reasonable progress toward attainment with periodic 3-year milestones. Subsection (a) discusses areas projected to attain by April 2010. Subsection (b) discusses areas projected to attain after April 2010.

a. Areas Projected To Attain Within 5 Years of Designation

Under this option, an area that the State projects will attain within five years of designation (i.e. April 2010) will be considered to have met the RFP requirement through submission of all regulations and emissions reductions necessary to demonstrate attainment as expeditiously as practicable. For such areas, attainment-level emissions must be achieved during 2009. It would be assumed that adequate interim progress is already being made in the area since the area would be projected to attain within a relatively short period of time—only two years from the date of SIP submittal. This option provides a flexible interpretation of RFP (''annual incremental emission reductions'') in order to minimize additional regulatory burden on State and local agencies. It is consistent with the approach taken for ''subpart 1 areas'' in the implementation rule for the 8-hour ozone program. How a State projects that an area will attain the standards within five years is a critical issue in implementing this approach and one on which EPA seeks comment. For example, should State projections of attainment be based on regional modeling conducted for major regulatory analyses (such as for CAIR), or should State projections only be based on local modeling analyses performed with a finer grid resolution and more refined local emission inventory inputs? EPA proposes that States must follow the Agency's most recent modeling guidance for $PM_{2.5}$ implementation in developing such projections. Section III.F. includes an in-depth discussion about modeling guidance and attainment demonstrations, and it requests comment on a number of related issues.

b. Areas Projected To Attain More Than 5 Years From the Date of Designation Must Submit a 2008 RFP Plan

Under this approach, EPA proposes that for any area for which the State submits an attainment demonstration in April 2008 requesting an attainment deadline extension beyond April 2010,[61] the state also must submit an RFP plan along with the area's attainment plan. This 2008 RFP plan must show that the area will achieve generally linear progress according to emission reduction milestones the State establishes for 2010 and every 3 years thereafter until the attainment year. Just as attainment is determined by evaluating air quality data for previous years, compliance with an RFP milestone would be determined by evaluating emissions from the previous year. Thus, any reference to an RFP milestone in this section refers to annual emissions levels achieved during the previous year and prior to January 1 of the milestone year.

The following sections III.G.4.b.i. through III.G.4.b.iv. describe the proposed 2008 RFP plan option under a scenario where there is no classification system. Section III.G.4.b.v. discusses a potential 2008 RFP plan approach for ''serious'' areas under a two-tiered classification system. As described in

FR 41997) described RFP requirements for serious PM_{10} nonattainment areas. (See 59 FR 42015.)

[60] Memorandum of November 18, 2002, from Lydia Wegman and Peter Tsirigotis, ''2002 Base Year Emission Inventory SIP Planning: 8-hr Ozone, $PM_{2.5}$ and Regional Haze Programs.'' This document is available at the following web site: *http://www.epa.gov/ttn/oarpg/t1/memoranda/2002bye_gm.pdf*.

[61] Section 172(a)(2)(A) allows EPA to provide extensions of 1 to 5 years based on an adequate demonstration by the State. Attainment deadline extensions under section 172(a)(2)(C), which extend the attainment deadline by up to a total of 2 additional years to confirm preliminary monitoring data indicating attainment, would not trigger the requirement for the second RFP plan.

section III.A., a serious area would be one that could not demonstrate that it would attain the standards within the first five years after designation, or one with a design value above a particular threshold.

i. For purposes of the 2008 RFP plan, how should a nonattainment area define its emission reduction milestones?

The deadline for submittal of the 2008 RFP plan is the same as the deadline for submittal of the attainment plan, i.e. three years after designations. In developing their RFP plans and emission reduction targets for specific nonattainment areas, States should use the emission inventories and air quality modeling they have completed for attainment planning purposes. EPA expects the attainment plan would define several elements of the 2008 RFP plan. First, the attainment plan will define the pollutants that are to be reduced for attaining the standards. Second, the attainment plan will define the relationship between emissions reductions and air quality improvement, including identifying the emissions reductions by pollutant which are needed to attain the standard. Third, the attainment plan will define the expected attainment year, thereby defining the number of years over which the reductions leading to attainment must occur.

EPA proposes that the 2008 RFP plan must provide emission reduction and program implementation milestones to be achieved by January 1, 2010 (based on the 2009 emissions year), and, if necessary, milestones to be achieved by January 1, 2013 (based on the 2012 emissions year). As part of the plan, the State also should include a motor vehicle emissions budget for each milestone year. The motor vehicle emissions budget should only apply to emissions attributed to vehicles in the nonattainment area. (See section III.K. for further discussion of transportation conformity issues.)

Under Section 172(a)(2)(A), EPA may extend the attainment deadline to as late as April 2015 (for areas where the effective date of designations is April 2005), based on an acceptable demonstration. Thus, 2014 is the latest year in which attainment level emissions are to be achieved. The EPA proposes to define RFP as emissions reductions that would be estimated to provide generally linear progress toward attainment from the 2002 base year emissions to the emissions year prior to the attainment date. The States have flexibility in meeting RFP goals with alternative emission reduction and air quality improvement scenarios.

An important element of establishing appropriate RFP milestones for addressing $PM_{2.5}$ is establishing the relative degrees of control of various pollutants. The following subsection describes how EPA proposes to assure that the plans provide for the necessary air quality improvement and yet provide flexibility for addressing a variety of situations of relative feasibility and significance of controlling various pollutants.

ii. For what pollutants must States reduce emissions?

One approach for achieving RFP is to address all pollutants, including direct PM and all precursors, on the same timetable. However, EPA recognizes that different control measures address different pollutants, and States can implement some measures more quickly than others. Therefore, EPA's proposal for 2008 RFP plan requirements includes two components: (1) A benchmark set of pollutant reductions that establish the overall level of control that the 2010 milestones must provide; and (2) an equivalency process that allows States the flexibility to address different pollutants according to different schedules so long as the EPA finds the net air quality improvements to be equivalent.

The RFP benchmark reflects reductions only for those pollutants that the State intends to reduce in the attainment plan, subject to EPA approval. Pollutants that are not subject to control measures in the attainment plan, either because of insignificant benefits in reducing ambient $PM_{2.5}$ concentrations or because of availability or feasibility of control, are not included in the RFP benchmark for 2008 RFP plan purposes.

EPA proposes that States should define RFP benchmark emission reduction levels in each area to reflect generally linear progress toward attainment. Consider an example for a particular area in which the State proposes an April 2013 attainment date and thus would need to achieve attainment level emissions in 2012. If the attainment plan calls for a 20 percent reduction in SO_2 emissions from 2002 levels and a 10 percent reduction in $PM_{2.5}$ direct emissions, then the RFP benchmark for SO_2 would reflect roughly a 2 percent reduction in SO_2 emissions per year, and the benchmark level for $PM_{2.5}$ would be roughly a 1 percent reduction per year. The 2010 milestones in this example would be about a 14 percent reduction in annual SO_2 emissions and a 7 percent reduction in $PM_{2.5}$ direct emissions to be achieved during 2009 (the emissions year prior to the January 1, 2010 milestone date).

EPA proposes that States must provide 2010 RFP milestones that provide air quality improvement equivalent to this RFP benchmark. The next subsection describes the process EPA is proposing to use to assess whether alternative timetables for controlling various pollutants are equivalent.

iii. How should States assess the equivalence of alternative combinations of pollutant emissions reductions?

EPA proposes to judge an alternative combination of pollutant emissions reductions as being at least equivalent to the RFP benchmark (e.g., emissions reductions to be achieved from 2002 to the January 1, 2010 milestone) if the State makes an adequate showing that the alternative will provide estimated air quality improvements that are roughly the same as those that the benchmark emission reductions would provide. If the State elects to follow this approach, it must provide in its 2008 RFP plan the information necessary to assess whether an alternative set of emissions reductions is generally equivalent to the RFP benchmark reduction levels. The attainment plan will define a set of emissions reductions and analyze the corresponding expected air quality improvements. For example, attainment plans that include reductions in SO_2 emissions will include modeling and an attainment demonstration which assess the corresponding reduction in sulfate concentrations. States should use this information to evaluate the equivalence of alternative combinations of pollutant emissions reductions.

EPA recommends that States estimate air quality improvements associated with intermediate emission control levels by assuming that the same relationship between emissions and air quality applies at intermediate levels as would apply at attainment plan levels. For the purpose of developing their 2010 RFP milestones, States should assume that by January 1, 2010, a given fraction of the emissions reductions in the attainment plan (i.e. the fraction being the percent of reductions to be achieved by the 2010 milestone) will achieve the same fraction of the associated air quality benefits in the attainment plan. An example in the next section further explains this point.

EPA recognizes that because atmospheric processes are quite complex, a specific percent change in emissions typically does not lead to an equivalent percent change in air quality. This non-linear relationship introduces

uncertainties as to whether alternate RFP plans will in fact achieve equivalent benefits. Nevertheless, EPA believes that it is important to provide the flexibility to address different pollutants on different timetables so long as the plan can reasonably be expected to achieve the intended air quality benefits at the RFP benchmark level. In general, EPA does not intend to require dispersion modeling specifically to assess whether an alternative approach to meeting RFP provides equivalent air quality benefits as the benchmark definition. The attainment plan modeling addresses the nonlinearities at attainment levels, and EPA believes for RFP plan purposes that the relationship between emissions and air quality at attainment levels provides an adequate approximation of the relationship at RFP levels.

EPA anticipates that RFP plans will generally only control pollutants that are also controlled in the attainment plan. Therefore, EPA expects the attainment plan to include information on the emissions-air quality relationship for all pollutants included in the RFP plan. If a case arises where the RFP plan reduces emissions for a pollutant that is not reduced in the attainment plan, the State may need to conduct additional modeling to assess the air quality benefit of the relevant component of the RFP plan to support its demonstration of equivalence with the RFP benchmark.

iv. How would RFP be evaluated for a sample 2008 RFP plan?

As an example, suppose that the attainment plan for ''Kleenare City'' projects that the area will attain the standards with a 20 percent reduction in SO_2 emissions, 20 percent reduction in nitrogen oxide emissions, and a 10 percent reduction in direct $PM_{2.5}$ emissions. (For the purpose of simplifying this example, assume that direct $PM_{2.5}$ emissions are principally comprised of organic and elemental carbon.) The area's plan projects that, consistent with the requirement to attain as expeditiously as practicable, the area would attain by April 2013 based on reductions achieved during 2012. Under EPA's proposal, the RFP benchmark levels should reflect roughly 1/10 of the emission reduction for each pollutant each year. Thus, for the ten year period from 2002–2012, this roughly equates to a 2.0 percent annual reduction in SO_2 emissions, 2.0 percent annual reduction in nitrogen oxide emissions, and 1.0 percent annual reduction in direct $PM_{2.5}$ (carbon) emissions per year. The January 1, 2010 milestones should then include 7/10 of the progress from 2002 conditions through 2009 (the emissions year prior to the milestone). Thus, the 2010 RFP benchmark would have emission levels reflecting a 14 percent reduction of SO_2 emissions, a 14 percent reduction of nitrogen oxide emissions, and a 7 percent reduction of direct $PM_{2.5}$ (carbon) emissions.

Unless the State sets RFP emission reduction milestones for 2010 identical to (or greater than) the RFP benchmark, the next step is to assess the air quality improvement estimated for the RFP benchmark and the air quality improvement estimated for the State's alternative milestones. Both assessments would rely on the relationship between emissions reductions and air quality improvement for the various pollutants addressed in the attainment plan.

This example assumes that Kleenare City has the concentrations of $PM_{2.5}$ constituents described in the above example, the attainment plan described in the paragraph above, and the expectation of achieving attainment level emissions by 2012 (i.e., a 2013 attainment deadline). Thus, the design value for the area is 17.0 μg/m^3, consisting of 7.0 μg/m^3 of ammonium sulfate, 6.0 μg/m^3 of carbonaceous PM (*e.g.* organic and elemental carbon), and 4.0 μg/m^3 of ammonium nitrate. Assume further that the attainment plan as described just above demonstrates relative reduction factors which indicate the following impacts: The 20 percent SO_2 emission reduction is expected to reduce ammonium sulfate concentrations by 1.2 μg/m^3; the 10 percent reduction in direct $PM_{2.5}$ emissions is expected to reduce direct $PM_{2.5}$ concentrations (assume this component is primarily organic and elemental carbon) by 0.4 μg/m^3; and the 20 percent NO_X emission reduction is expected to reduce nitrate concentrations by 0.6 μg/m^3.

As calculated above, the RFP benchmark levels for 2010 would include 7/10 of the emissions reductions planned through 2012, which would be expected to achieve at least 7/10 of the associated air quality improvement expected in the attainment plan. Thus, the 2010 RFP benchmark levels would be expected to reflect the following estimated air quality improvement: the 20 percent SO_2 emission reduction would yield an estimated [1.2 * (14 percent / 20 percent)] or 0.84 μg/m^3 ammonium sulfate reduction, the 8 percent direct $PM_{2.5}$ (carbon) emission reduction would yield an estimated [0.4 * (7 percent / 10 percent)] or 0.28 μg/m^3 carbon particle reduction, and the 20 percent NO_X emission reduction would yield an estimated [0.6 * (14 percent / 20 percent)] or 0.42 μg/m^3 ammonium nitrate reduction. The total air quality improvement of this 2010 benchmark plan would be estimated as (0.84 + 0.28 + 0.42), or 1.54 μg/m^3. Thus, for this example, the target air quality level for the 2007–9 period would be approximately 15.5 μg/m^3 (17.0 − 1.54 = 15.46).

Now suppose that the State is considering phasing in emission reduction strategies such that by the 2010 milestone date, SO_2 emissions would be reduced by only 10 percent, direct organic and elemental carbon particle emissions would be reduced by the full 10 percent (as included in the attainment plan), and NO_X emissions would be reduced by the full 20 percent. This alternative would be estimated to achieve air quality improvement that includes [1.2 * (10 percent / 20 percent)] or 0.6 μg/m^3 ammonium sulfate reduction, [0.4 * (10 percent / 10 percent)] or 0.4 μg/m^3 carbon particle reduction, and [0.6 * (20 percent / 20 percent)] or 0.6 μg/m^3 ammonium nitrate reduction. The total air quality improvement of this 2010 milestone alternative would be estimated to be (0.6 + 0.4 + 0.6) or 1.6 μg/m^3 reduction in $PM_{2.5}$ concentrations. Since this estimated air quality improvement exceeds the improvement estimated for the 2010 RFP benchmark level, EPA would judge this set of milestones to be considered equivalent to the 2010 RFP benchmark levels.

v. What potential RFP requirements could apply for ''serious'' areas under the two-tiered classification option?

As described in section III.A. on classification options, a serious area would be one that could adequately demonstrate that attainment of the standards ''as expeditiously as practicable'' would not be within the first five years after designation, and therefore would receive an attainment date extension of 1 to 5 years. Under the two-tiered classification option, a serious area would be subject to more stringent requirements in return for the attainment date extension. The classifications section III.A. takes comment on possible ''more stringent'' requirements for serious areas, including prescriptive RFP requirements and/or lower thresholds for RACT review (under one RACT option presented in section III.I.5 of this package).

One possible RFP approach contemplated in the classifications discussion is a fixed percentage reduction of the emissions of direct $PM_{2.5}$ and regulated $PM_{2.5}$ precursors to be achieved in specified milestone years between the 2002 base year and the

attainment year proposed in the attainment demonstration. This approach would be patterned after the rate of progress requirement in section 182 for ozone, which requires a 3 percent per year average emission reduction of VOC for certain areas, with emission reduction targets to be met every three years (*i.e.*, a 9 percent reduction over three years). The EPA could formulate this alternative either with the same 3 percent average annual emission reduction as specified in section 182 or with some other more appropriate percentage. Use of a fixed percentage reduction target would be consistent with the congressional intent behind the section 182 requirement to require additional emission reduction actions in areas with more serious air quality problems.

This approach could require a strict percentage reduction of each pollutant, or it could allow the States flexibility to employ a different mix of pollutant reduction percentages in order to achieve an equivalent air quality improvement as would be achieved under the fixed percentage approach. Section III.G.5.b.iii. above provides guidance on how to demonstrate equivalency in this type of situation.

Under this option, RFP plans would be submitted in April 2008 along with attainment plans. RFP milestones would be established for 2010 and, in the case of areas with later attainment dates, 2013. The application of the percent reduction concept is relatively straight forward. For example, under a 3 percent per year RFP emission reduction requirement for an area with an attainment date extension to 2015, the area's 2010 emission reduction milestone would reflect a 21% reduction (i.e. 3% per year $\times$ 7 years from 2002 through 2009) in emissions of regulated $PM_{2.5}$ pollutants. For a 2013 milestone (e.g. reductions through 2012), a 30% emission reduction would be required (3% per year $\times$ 10 years from 2002 to 2012). The requirement for RFP between 2013 and the attainment date would be satisfied by the reductions needed for attainment.

As with the basic RFP approach proposed above, all emissions reductions since 2002 from federal, regional, state and local measures would be creditable toward meeting the RFP targets. These would include, for example, substantial reductions from CAIR, federal motor vehicle emissions standards and other federal rules. Overall, we believe there would be merit in establishing a more stringent RFP requirement under any option for serious areas. An advantage of the fixed percentage approach may be that it would be easier to implement and communicate to the public. EPA requests comment on the use of a fixed percentage requirement for serious areas and on what is an appropriate annual percentage reduction rate for $PM_{2.5}$ and associated precursors.

5. Other RFP Issues

a. How should States account for regional control strategies in evaluating RFP?

States should consider all adopted, enforceable control programs in evaluating whether RFP is being achieved, including national measures, regional measures, and local measures. National programs established by EPA include the Clean Air Interstate Rule addressing SO_2 and NO_X emissions in the eastern U.S., eastern NO_X reductions from power plants and other sources to address the ozone standards (the ''NO_X SIP call''), and a variety of motor vehicle limitations, including the phase-in of emission limits as new vehicles replace older vehicles through fleet turnover. More recent mobile source rules include limits for new heavy-duty diesel engines starting in 2004, considerably more stringent diesel engine limits starting in 2007, emission limits for new gasoline vehicles (''Tier II'') starting in 2004, limits on the sulfur content of gasoline and diesel starting in 2004 and 2006, respectively, and limits on nonroad vehicle emissions. Expressed more generally, States should base the evaluation of RFP simply on the enforceable emissions for the area, regardless of what mix of adopted control programs and other influences lead to the applicable emissions level.

The guidance for $PM_{2.5}$ differs somewhat in this respect from the guidance for ozone. For ozone, CAA section 182(b)(1)(D) specifies several types of measures that may not be credited toward achievement of the ozone rate of progress requirements. These restrictions are only mandated by the statute with respect to pre-1990 controls for ozone. The Act does not provide any such requirement with respect to controls for PM.

b. What geographic area should States address in RFP plans?

Another important issue is the geographic area to be addressed in the RFP plan. As discussed above, EPA believes the CAA RFP provision requires emissions reductions that will provide steady improvement in air quality in the nonattainment area prior to its attainment date. This suggests that RFP requirements should apply within a geographic area from which emissions substantially affect air quality in the nonattainment area. This geographic area may differ for different pollutants that contribute to $PM_{2.5}$ levels. The EPA also envisions approaching this issue differently for the reasons described below.

EPA proposes an approach based on EPA's views of the typical emissions area that most strongly correlates with associated components of urban $PM_{2.5}$ concentrations. Since different prospective nonattainment areas have different types of $PM_{2.5}$ problems, some areas may warrant use of different geographic areas from the defaults presented here. For example, a mountain valley area in which concentrations are dominated by local emissions regularly trapped in inversions should address all pollutants on a nonattainment area basis and not on a statewide basis.

EPA is proposing default areas of consideration for emissions of direct $PM_{2.5}$, NO_X, and SO_2. For direct $PM_{2.5}$ emissions, including emissions of elemental carbon, organic particles and inorganic particles such as metals and crustal material, emissions from within the nonattainment area should be considered for tracking compliance with RFP milestones. Particles that originate from direct $PM_{2.5}$ emissions tend to be dominated by nearby emissions. While the greatest impact at a monitoring location may arise from sources within a few kilometers, a nonattainment area-wide approach assures that the entire area is achieving RFP. A nonattainment area-wide approach also will generally be easier to administer in conjunction with other requirements such as RACT and RACM. EPA does not believe that direct $PM_{2.5}$ emissions from sources outside the nonattainment area should be considered for RFP purposes.

The proposed approach for considering NO_X and SO_2 emissions for RFP under the $PM_{2.5}$ program is similar to the approach for addressing NO_X emissions in past guidance for 1-hour ozone rate of progress plans.[62] The ozone guidance provides that in their RFP baseline inventories, States at a minimum are required to include all

[62] Memorandum of December 29, 1997 from Richard D. Wilson to Regional Administrators, Regions I–X re ''Guidance for Implementing the 1-Hour Ozone and Pre-Existing PM_{10} NAAQS.'' Located at URL: *http://www.epa.gov/ttn/oarpg/t1/memoranda/iig.pdf-*. This policy recognized that VOC emissions up to 100 km and NO_X emissions up to 200 km from the nonattainment area could be relied on for RFP. The specified distances resulted from discussions of the FACA Subcommittee on Ozone, PM, and Regional Haze Implementation Programs. Because some stakeholders have expressed concerns about this policy, EPA is in the process of subjecting this policy to a technical review and may revise it in light of that review.

sources of NO_X and VOC emissions from within the nonattainment area. The ozone guidance also provides that States may include in RFP plans certain NO_X sources located up to 200 kilometers outside of an ozone nonattainment area and certain VOC sources located 100 kilometers outside of an ozone nonattainment area and take credit for emission reductions from these sources for RFP purposes. EPA believes that for the $PM_{2.5}$ program, it would be appropriate to allow for the possibility of crediting SO_2 and NO_X reductions outside the nonattainment area because numerous technical studies have generally demonstrated the long-range transport of sulfates and nitrates. (See section II on the technical characterization of $PM_{2.5}$.) As with ozone, EPA believes that ambient particle concentrations reflect a combination of effects from local as well as regional NO_X and SO_2 emissions, justifying an approach that focuses on nonattainment area NO_X and SO_2 emissions but also gives incentive for reductions outside the nonattainment area.

However, because of various concerns expressed about such a policy for RFP purposes, any State proposing to take credit for reductions by any NO_X or SO_2 source located within 200 kilometers of the nonattainment area will need to include with its SIP submittal appropriate documentation demonstrating that emissions from the sources outside the nonattainment area contribute to fine particle concentrations within the nonattainment area. Because of the uncertainty associated with VOC contributions to $PM_{2.5}$ concentrations, we do not believe it would be appropriate to extend the policy to VOC sources located 100 kilometers outside of a $PM_{2.5}$ nonattainment area. If the State or EPA finds that VOC are a significant contributor to an area's $PM_{2.5}$ problem, RFP credit for VOC will be granted for reductions achieved within the nonattainment area only.

As discussed earlier, the RFP plan should include a motor vehicle emissions budget for each milestone year. Because the transportation conformity program applies only within the nonattainment area, the RFP plan cannot take credit for motor vehicle direct $PM_{2.5}$ and applicable $PM_{2.5}$ precursor emissions reductions achieved outside of the nonattainment area. (See section III.K. for further discussion of transportation conformity issues.)

The EPA expects that analyses conducted as part of the attainment demonstration will help identify the most appropriate geographic range of interest for each pollutant. EPA believes that if an area concludes that controls for a specific pollutant on an alternate geographic scale are more appropriate for reaching attainment, the area should use that same alternate geographic scale in assessing RFP. In particular, for each pollutant addressed, the same geographic scale must be used in analyzing the 2002 inventory, the attainment year inventory, and any RFP milestone year inventories, in order to assure that the milestones in fact represent RFP on a path to timely attainment.

EPA solicits comments on other alternatives for the geographic coverage of NO_X and SO_2 inventories. The principal alternatives of interest are to be either more or less inclusive. EPA takes comment on (1) an approach that would allow the State to include a broader set of sources [63] located within 200 kilometers of the nonattainment area, and (2) an approach including all nonattainment area sources but no additional sources outside the nonattainment area.

c. How should RFP be addressed in multi-state nonattainment areas?

In general, EPA seeks to ensure that nonattainment areas that include more than one State meet RFP requirements as a whole. States that share a nonattainment area should consult to assure that the collective set of emission reduction milestones provide for adequate emissions reductions to represent RFP for the area as a whole. The States should work with the EPA region or regions that oversee the SIPs for those States to confirm that their collective approach is acceptable for RFP.

d. How should States compile emission inventories for RFP plans?

In general, States should prepare emission inventories for RFP plans according to the same guidance that applies to emission inventories for attainment plans. Similar guidance on assessment of allowable emissions resulting from a new emission limit applies in both cases. Emission inventories for RFP plans should be adequate to track progress in meeting the annual standard in all areas. States should also develop inventories adequate to ensure progress in meeting the 24-hour standard for those areas that violate or are close to violating this standard.

e. What RFP requirements apply in Tribal areas?

Under the Tribal Authority Rule (40 CFR 49.4), EPA found that it was not appropriate to treat Tribes in a manner similar to a State with regard to SIP schedules. This flexibility extends to submittal of plans for the RFP requirement. Because there are typically limited emissions in Tribal areas, this flexibility on RFP should not have significant impact on surrounding jurisdictions in most instances. However, the TAR also acknowledges that where the Tribes are unable to meet the requirements of the CAA, EPA will implement the program where it is ''necessary and appropriate''. Therefore, in the event that flexibility in the RFP deadline for Tribes jeopardizes RFP in surrounding jurisdictions, EPA will work with the Tribes to ensure that emissions on Tribal lands are appropriately addressed.

EPA guidance for nonattainment areas that include both State and Tribal lands is similar to guidance for multi-State nonattainment areas. States and Tribes that share a nonattainment area should consult to assure that the collective set of emission reduction milestones for the nonattainment area as a whole satisfy the requirements described above and thus provide for the steady air quality improvement intended under the CAA.

f. What must States submit to show whether they have met RFP milestones?

The establishment of milestones implies subsequent reporting demonstrating whether these milestones have been met. For example, the establishment in a 2008 RFP plan of milestones reflecting 2009 emissions implies reporting in 2010 whether these milestones were met. However, emissions for a given year are commonly not known until well after the year has ended. The EPA is evaluating alternative approaches to this issue and plans to issue guidance on this issue at a later date.

H. What requirements for contingency measures should apply under the $PM_{2.5}$ implementation program?

For $PM_{2.5}$, under Subpart I of the CAA, all nonattainment areas must include in their SIPs contingency measures consistent with section 172(c)(9). Contingency measures are additional control measures to be implemented in the event that an area fails to meet RFP or fails to attain the standards by its attainment date. These contingency measures must be fully

[63] Under this option, sources outside the nonattainment area would exclude on-road sources since under the transportation conformity program, motor vehicle emissions budgets apply only within the nonattainment area.

adopted rules or control measures that are ready to be implemented quickly upon failure to meet RFP or failure of the area to meet the standard by its attainment date. The SIP should contain trigger mechanisms for the contingency measures, specify a schedule for implementation, and indicate that the measures will be implemented without significant further action by the State or EPA. The contingency measures should consist of other control measures for the area that are not included in the control strategy for the SIP.

The April 16, 1992 General Preamble provided the following guidance: ''States must show that their contingency measures can be implemented with minimal further action on their part and with no additional rulemaking actions such as public hearings or legislative review. In general, EPA will expect all actions needed to affect full implementation of the measures to occur within 60 days after EPA notifies the State of its failure.'' (57 FR at 13512.) This could include Federal measures and local measures already scheduled for implementation.

The EPA has approved numerous SIPs under this interpretation—i.e., that use as contingency measures one or more Federal or local measures that are in place and provide reductions that are in excess of the reductions required by the attainment demonstration or RFP plan. (62 FR 15844, April 3, 1997; 62 FR 66279, December 18, 1997; 66 FR 30811, June 8, 2001; 66 FR 586 and 66 FR 634, January 3, 2001.) The key is that the statute requires extra reductions that are not relied on for RFP or attainment and that are in the demonstration in order to provide a cushion while the plan is revised to meet the missed milestone. In other words, contingency measures are intended to achieve reductions over and beyond those relied on in the attainment and RFP demonstrations. Nothing in the statute precludes a State from implementing such measures before they are triggered. In fact, a recent court ruling upheld contingency measures that were previously required and implemented where they were in excess of the attainment demonstration and RFP SIP. *See LEAN* v. *EPA,* 382 F.3d 575 5th Circuit, 2004.

One basis EPA recommends for determining the level of reductions associated with contingency measures is the amount of actual $PM_{2.5}$ emissions reductions required by the control strategy for the SIP to attain the standards. The contingency measures are to be implemented in the event that the area does not meet RFP, or attain the standards by the attainment date, and should represent a portion of the actual emissions reductions necessary to bring about attainment in area. Therefore, the emissions reductions anticipated by the contingency measures should be equal to approximately one year's worth of emissions reductions necessary to achieve RFP for the area (See section III.G. for more detail on RFP requirements.)

As stated previously, EPA believes that contingency measures should consist of other available control measures beyond those required to attain the standards, and may go beyond those measures considered to be RACM for the area. It is, however, important that States make decisions concerning contingency measures in conjunction with their determination of RACM for the area, and that all available measures needed in order to demonstrate attainment of the standards must be considered first; all remaining measures should then be considered as candidates for contingency measures. It is important not to allow contingency measures to counteract the development of an adequate control strategy demonstration.

Contingency measures must also be implemented immediately after EPA determines that the area has either failed to meet RFP, or attain the standard by its attainment date. The purpose of the contingency measure provision is to ensure that corrective measures are put in place automatically at the time that EPA makes its determination that an area has either failed to meet RFP or failed to meet the standard by its attainment date. The EPA is required to determine within 90 days after receiving a State's RFP demonstration, and within 6 months after the attainment date for an area, whether these requirements have been met. The consequences for states which fail to attain or to meet RFP are described in section 179 of the Act.

I. What requirements should apply for RACM and RACT for $PM_{2.5}$ nonattainment areas?

1. General Background

Subpart 1 of section 172 of the Act includes general requirements for all designated nonattainment areas. Section 172(c)(1) requires that each nonattainment area plan ''provide for the implementation of all reasonably available control measures as expeditiously as practicable (including such reductions in emissions from existing sources in the area as may be obtained through the adoption, at a minimum, of reasonably available control technology), and shall provide for attainment of the national primary ambient air quality standards.'' States are required to implement RACM and RACT in order to attain the standards ''as expeditiously as practicable.''[64] A RACM demonstration should show that there are no additional reasonable measures available that would advance the attainment date by at least one year or contribute to RFP for the area.[65]

This section first discusses issues associated with RACT, traditionally considered to be an independent stationary source control requirement, and then addresses issues associated with RACM.

2. Background for RACT

EPA's historic definition of RACT has been the lowest emissions limitation that a particular source is capable of meeting by the application of control technology that is reasonably available, considering technological and economic feasibility. Because RACT is a control technology requirement and modeling techniques were not precise in the past, RACT has been considered to be independent of the need to demonstrate attainment.

Section 172 (subpart 1) does not include specific applicability thresholds for the size of sources that should be the minimum starting point for RACT analysis, as are provided in subpart 2 (ranging from 100 to 10 tons per year for ozone, depending on the level of nonattainment) or subpart 4 (either 100 or 70 tons per year for PM_{10} depending on the level of nonattainment). Subpart 1 also does not include a specific list of stationary source categories for which control techniques guidelines are to be developed. For PM_{10}, the Act provided particular emphasis for specific sources of area emissions, but did not highlight specific stationary sources for the purposes of RACT. (Section 190 of the Act required EPA to develop RACM guidance documents for residential wood combustion, prescribed burning for forest management and agricultural activities, and for urban fugitive dust control.) Under subpart 2 for ozone, EPA has more specifically identified RACT for certain source categories through issuance of a number of control techniques guidelines (CTGs) and

[64] Under the TAR, requirements for RACT and RACM may be considered to be severable elements of implementation plan requirements for Tribes.

[65] In the context of the PM_{10} NAAQS, EPA has concluded, based upon the annual form of the standard, that ''advancement of the attainment date'' should mean an advancement of at least one calendar year. See: State Implementation Plans; General Preamble for the Implementation of Title I of the CAA Amendments of 1990; Proposed Rule.'' April 16, 1992 (57 FR 13498). *See also Sierra Club* v. *EPA,* 294 F.3d 155 (DC Cir. 2002).

alternative control techniques (ACTs) documents.

3. Emissions Inventory Analysis Supporting RACT Options

As supporting information for developing options for RACT for $PM_{2.5}$, we have reviewed the 2001 National Emissions Inventory to examine both the size range of stationary sources and the types of sources that emit $PM_{2.5}$ and its precursors. Because the statutory requirements for both PM_{10} and ozone are such that the RACT applicability threshold cannot be higher than a potential to emit 100 tons per year, we began our analysis by evaluating the national emissions inventory to identify sources of $PM_{2.5}$ or any precursor which exceeded this threshold. Because information in the national emission inventory is expressed in terms of actual emissions rather than ''potential'' emissions, we used actual emissions information in this analysis as a surrogate for potential emissions thresholds.

Our analysis of the national emissions inventory indicates that the mix of source categories responsible for $PM_{2.5}$ and precursor emissions in potential $PM_{2.5}$ nonattainment areas varies greatly. Contributing sources include stationary sources such as electricity generating units, industrial boilers, and oil refineries, as well as smaller mobile and area sources, such as diesel engines, solvent usage, and various types of burning activities.

The analysis of point source emissions for stationary sources located in $PM_{2.5}$ nonattainment areas shows that for each of the five main pollutants associated with $PM_{2.5}$ (direct $PM_{2.5}$, SO_2, NO_X, VOC, and ammonia), individual facilities with actual emissions greater than 100 tons per year of one of these pollutants account for a significant amount of the total emissions for all facilities in these areas. When the potential 70 and 50 ton per year thresholds are compared to the 100 ton per year threshold, the additional emissions coverage increases by 2 percent or less for $PM_{2.5}$, NO_X, SO_2, and ammonia. For VOC, the emissions coverage increases modestly, by about 9 percent.

In contrast, the number of facilities potentially covered at the 70 and 50 ton thresholds increase more significantly. When the number of facilities exceeding the 100 ton threshold for each pollutant is compared to the number of facilities exceeding the 70 ton threshold, the numbers of facilities increase from 10 percent (ammonia) to 44 percent (VOC). When the number of facilities exceeding the 100 ton threshold for each pollutant is compared to the number of facilities exceeding the 50 ton threshold, the numbers of facilities increase by 24 percent (SO_2) to 90 percent (VOC).

4. Which $PM_{2.5}$ precursors must be addressed by States in establishing RACT requirements?

As discussed earlier in this section on RACT and RACM and in the technical overview section, the precursors of $PM_{2.5}$ are SO_2, NO_X, VOC, and ammonia. In section II.E., we discuss options for addressing these precursors under the PM implementation program. The EPA will finalize its precursor policy for PM implementation after considering public comment received on this proposal.

5. What are the proposed options for implementing the RACT requirement?

This section describes the approaches EPA is considering for implementation of the RACT requirement of section 172(c)(1), to insure that States consider and adopt RACT measures for stationary sources in a way that is consistent with the overarching requirement to attain the standards as expeditiously as practicable, yet provides flexibility for States to focus regulatory resources on those sources of emissions that contribute most to local $PM_{2.5}$ nonattainment. The RACT requirement will apply both to sources of direct $PM_{2.5}$ emissions and to sources of $PM_{2.5}$ precursors in the given nonattainment area. The EPA will require States to demonstrate that they have adopted all appropriate RACT measures in the attainment demonstrations that States must submit to EPA in early 2008.

EPA is proposing three basic approaches to implementing the RACT requirement. The first alternative would simply require States to conduct a RACT analysis and require reasonably available controls for all affected stationary sources in the nonattainment area, comparable to the implementation of RACT provided in subpart 4 governing implementation of the PM_{10} NAAQS and subpart 2 governing implementation of the 1-hour ozone NAAQS. Under this alternative for RACT, EPA is also proposing to limit the universe of sources for which States must conduct a RACT analysis and impose RACT controls, based upon the amount of emissions potentially emitted by the sources. (See discussion later in this section on potential emissions thresholds applicable under the first alternative.) The second alternative would likewise require States to conduct a RACT analysis and require reasonably available controls on stationary sources, but would allow States to decline to impose controls that would not otherwise be necessary to meet RFP requirements or to attain the $PM_{2.5}$ NAAQS as expeditiously as practicable.[66]

The third alternative would be a combination of the first two and is consistent with the RACT approach adopted in the final implementation rule for the 8-hour ozone program. It would require States to conduct a RACT analysis and require reasonably available controls for all affected stationary sources in the nonattainment area only for areas with attainment dates more than five years from the date of designation. For areas with an attainment date within five years of designation (e.g. by April 2010 for areas designated in late 2004), RACT would be required as under the second alternative, in which States could decline to impose controls that would not otherwise be necessary to meet RFP requirements or to attain the $PM_{2.5}$ NAAQS as expeditiously as practicable. The EPA seeks comment on the three alternative approaches for RACT discussed below, and on the options presented for a RACT source emissions threshold applicable under the first and third options.

First proposed alternative for RACT. Under the first alternative, EPA would require States to conduct RACT determinations and require RACT controls for all stationary sources located in nonattainment areas, subject to any size threshold as discussed in the options below. In this approach, covered sources would be required to apply technically and economically feasible controls and there would be no opportunity for States to excuse major stationary sources from control on the basis that the emissions reductions from those controls would not be necessary for RFP or to expedite attainment. The EPA believes that this first alternative would be consistent with the approach set forth in the CAA in subpart 4 governing PM_{10} nonattainment areas and in subpart 2 governing 1-hour ozone nonattainment areas wherein all stationary sources with at least a given amount of potential annual emissions are subject to RACT controls. The logic behind requiring RACT for all such sources in subpart 2 and subpart 4 was presumably that large stationary sources are a significant source of emissions in nonattainment areas and that States

[66] Note that States are required to implement RACT only within the nonattainment area while it is proposed elsewhere in today's proposal that States may use reductions from selected sources outside the nonattainment area to meet RFP milestones.

necessarily need to control them as part of an effective SIP.

EPA believes that requiring RACT for all large sources may also be appropriate for implementation of the RACT requirement for $PM_{2.5}$ for a number of reasons. First, as with ozone problem areas, sources located across a broad region appear to contribute to $PM_{2.5}$ nonattainment problems. As such, implementing the RACT requirement for all major sources located in nonattainment areas will ''level the playing field'' from one area to another. Controls on sources subject to RACT will improve air quality in the nonattainment area in which the facility is located, and in many cases will also improve air quality in nearby nonattainment areas.

Second, like ozone and to a lesser extent PM_{10}, $PM_{2.5}$ nonattainment in many areas appears to be largely a product of secondarily formed particles that result from emissions of precursors that react in the atmosphere. While we understand the basic processes and mechanisms that cause $PM_{2.5}$ formation, we likewise recognize that sorting out the various sources and their impacts on local and regional nonattainment is a difficult and resource intensive process, subject to some uncertainty. Requiring RACT controls for all large stationary sources under subpart 2 (for ozone) and subpart 4 (for PM_{10}) greatly simplified the SIP development process by requiring the analysis for and imposition of RACT controls for these sources, and thereby foreclosed the need to divert State resources to demonstrate conclusively the need for RACT controls for large stationary sources or to explore plan options that would permit excusing certain sources from control, perhaps at the cost of regulating other smaller sources less central to the nonattainment problem.

Third, EPA notes that the rule to implement the new 8-hour ozone NAAQS also sought comment on an option that would require RACT for all large stationary sources in subpart 1 areas with design values greater than 91 parts per billion (ppb). Given that some of the $PM_{2.5}$ and 8-hour ozone nonattainment areas will overlap and that PM and ozone have common precursors, EPA anticipates that many of the same large stationary sources will be subject to RACT in connection with the ozone NAAQS in any case. Thus, requiring RACT on all large sources will also ''level the playing field'' among sources located in ozone or $PM_{2.5}$ nonattainment areas, and will help to alleviate unintended consequences of an inconsistent approach.

Notwithstanding the practical and policy arguments in favor of requiring RACT for all large stationary sources, EPA recognizes that in other contexts concerning other NAAQS, RACT has been interpreted alternatively as a component of the general RACM requirement in section 172(c)(1). Nevertheless, EPA believes that the health impacts of $PM_{2.5}$ nonattainment and the similarities between the $PM_{2.5}$, PM_{10}, and ozone problems (e.g., cause by many and various sources, regional in nature) may justify consideration of a comparable RACT approach. The EPA specifically solicits comment on this alternative in which RACT is required for all large sources above a particular tonnage threshold, without regard to RFP or attainment needs.

Options for a RACT emissions threshold under the first proposed alternative. Under the first proposed alternative in which States are required to impose RACT controls on stationary sources, EPA recognizes that it may not be reasonable for States to require RACT controls regardless of the amount of the emissions from the individual sources in question. Section 172(c)(1) does not provide an explicit cutoff for the size of sources that States should subject to RACT controls, but there are such cutoffs elsewhere in the statute.

For example, in section 182(b)(2) governing nonattainment areas for the one-hour ozone NAAQS, the CAA requires RACT for those sources covered by preexisting control techniques guidelines or for other ''major stationary sources,'' *i.e.*, those sources with emissions above a specified number of tons per year, which varies depending upon the area's nonattainment classification. In subpart 4 governing PM_{10} nonattainment areas, section 189(b)(3) defines a ''major source'' as one stationary source (or a group of such sources contiguously located and under common control) that emits or has the potential to emit at least 70 tons of PM_{10} per year, thereby altering the otherwise applicable 100 ton definition of major source in ''moderate'' PM_{10} nonattainment areas and imposing greater control requirements on smaller sources in areas that are ''serious'' nonattainment for PM_{10}. The logic behind such emissions thresholds is presumably that requiring RACT controls for small sources may not achieve the same degree of reductions that may be possible through focusing regulatory resources on relatively larger sources.

Given the significance of the health impacts that result from $PM_{2.5}$ nonattainment, EPA considered proposing that there should be no size threshold for sources that States must address in a RACT analysis, thereby considering even small emissions sources for RACT controls and implementing those controls as appropriate. Ultimately, however, EPA has concluded that under the first proposed alternative for RACT, requiring RACT analyses for all stationary sources, regardless of the amount of annual potential emissions, may divert resources and attention from the necessary RACT analyses for larger, more significant sources of direct $PM_{2.5}$ and $PM_{2.5}$ precursors. Moreover, EPA expects States to consider controls for smaller stationary sources as part of the RACM analysis discussed below, so EPA does not anticipate that the creation of a RACT threshold based upon the amount of emissions will serve to exempt smaller stationary sources completely from all consideration of controls.

In short, EPA finds that under the first proposed alternative, it may not be reasonable to require RACT controls for all stationary sources regardless of size, and EPA is proposing to interpret section 172(c)(1) to allow EPA to define the universe of sources for which States should consider the need to impose RACT, based upon the potential annual emissions of the sources affected. For the first overall RACT alternative discussed above, EPA is proposing three sub-options for thresholds for implementing the RACT requirement that would limit the universe of sources for which States must conduct a RACT analysis, based upon the potential emissions from each source.

The first sub-option would require States to conduct RACT determinations, at a minimum, for all existing stationary sources[67] located in nonattainment areas and which have the potential to emit 100 tons per year or more of direct $PM_{2.5}$ or any individual precursor to $PM_{2.5}$. (See the following subsection for a more detailed discussion of precursor emissions covered under RACT.) A source would be subject to this requirement if its plant-wide potential emissions exceeded the 100 ton threshold for $PM_{2.5}$ or any individual precursor in the baseline year of 2002 or later. We would require States to adopt RACT rules covering those sources above this threshold for which control

[67] A stationary source, as defined in various EPA regulations, is any building, structure, facility or installation which emits or may emit any pollutant regulated under the CAA, and for which all of the pollutant-emitting activities belong to the same industrial grouping, are located on one or more contiguous or adjacent properties, and are under the control of the same person (or persons under common control).

measures are technically and economically feasible. As discussed in the previous section, the number of sources with emissions over 100 tons per year of direct $PM_{2.5}$ or any precursor pollutant make up a fairly small percentage of all stationary sources, but on a pollutant-by-pollutant basis, they are responsible for 70–90+ percent of the emissions in many nonattainment areas. Thus, this proposed approach to RACT would provide a mechanism by which States can address large emissions sources in all contributing source categories while evaluating a relatively small number of sources for consideration of RACT and implementation of RACT, as compared to the entire inventory of emissions sources.

Under the second proposed sub-option on emissions thresholds, we would require States to conduct RACT determinations for all existing stationary sources located in nonattainment areas which have potential emissions of 50 tons per year or more of direct $PM_{2.5}$ or any individual precursor to $PM_{2.5}$. Under this option, States would conduct RACT determinations for a larger universe of stationary sources responsible for a larger fraction of direct $PM_{2.5}$ and precursor emissions. This sub-option would provide a lower threshold for RACT that would require States to address smaller sources and a broader range of sources under the RACT requirement.

As a third suboption for a RACT emissions threshold under the first alternative, EPA is considering creation of a scaled RACT threshold based upon the severity of pollution in the nonattainment area. Under this approach, most PM areas would have a 100-ton threshold, but areas with a more serious PM problem would have a 50-ton threshold. As a variation, another tier (e.g., 25 tons or 10 tons) could be created for areas with the highest PM levels.

The CAA imposes a tiered RACT approach for ozone in subpart 2, and EPA believes that the approach has been helpful to assure more expeditious attainment of the ozone NAAQS. The EPA has not yet determined what design values might be appropriate as cut points for lower thresholds, and we specifically request comments and supporting analyses on this issue, as well as on the overall approach in general.

Under all three sub-options for the RACT threshold, the specified potential-to-emit threshold would be the minimum starting point for RACT analyses. The EPA would not preclude a State from conducting an analysis to assess the suitability of RACT controls for sources with emissions below the applicable threshold, particularly in areas having more serious air quality problems, in order to apply available control technology to those existing sources in the nonattainment area that are reasonable to control in light of the attainment needs of the area and the feasibility of installing such controls.[68] For example, States may find that selected source categories can apply controls cost-effectively at smaller sources than EPA's baseline applicability threshold.

Second proposed alternative for RACT. Under the second proposed alternative for RACT, EPA also would require States to conduct a RACT analysis and to require RACT for stationary sources, but would allow States to decline to impose controls that would otherwise be required as RACT if they are not necessary to meet RFP requirements or to attain the $PM_{2.5}$ NAAQS as expeditiously as practicable. In connection with other NAAQS, EPA has previously interpreted section 172(c)(1) to provide that a State must adopt at a minimum those RACM measures that are necessary for the nonattainment areas in that State to meet RFP requirements and to attain the standards as expeditiously as practicable. Under this second proposed alternative, the imposition of RACT controls on stationary sources would derive from the same statutory provision and impose the same requirement.[69] The EPA has also interpreted section 172(c)(1) to allow a State to decline to adopt certain technically and economically feasible measures, if adoption of those measures would not advance the attainment date by at least a year for the nonattainment area. Under this alternative interpretation, EPA would take the position that the RACT requirement for the $PM_{2.5}$ standards should be subject to that limitation as well.[70]

In the context of the PM_{10} NAAQS, EPA has concluded, based upon the annual form of the standard, that ''advancement of the attainment date'' should mean an advancement of at least one calendar year.[71] Similarly, given that the annual $PM_{2.5}$ standard is considered to be the ''controlling'' standard (as opposed to the 24-hour standard), and the fact that all sites violating the $PM_{2.5}$ standards are violating the annual standard rather than only the 24-hour standard, EPA believes that, under this option, advancement of the attainment date by at least one calendar year is likewise the proper test for assessing whether RACM (including RACT under this option) would advance the attainment date for purposes of the $PM_{2.5}$ NAAQS.

EPA's second proposed RACT alternative, therefore, would require that all States must adopt such RACT measures for stationary sources as are necessary to meet RFP requirements and to attain the $PM_{2.5}$ standards as expeditiously as practicable. Under this approach, determination of RACT would be part of the broader RACM analysis and identification of all measures—for stationary, mobile, and area sources—that are technically and economically feasible, and that would collectively contribute to advancing the attainment date. Because RACT and RACM are considered together under this alternative, we are not proposing emissions threshold options for evaluation of stationary source RACT as are included under the first proposed alternative. In addition, under the second alternative, areas cannot avoid the imposition of either available RACT or RACM measures without a demonstration showing that there is no combination of such declined RACT and RACM measures that would advance the date of attainment by one year.

EPA presumes that many States with $PM_{2.5}$ nonattainment areas will conclude that RACT standards are necessary for many of the major stationary sources of emissions within the boundaries of such nonattainment areas in order to meet RFP and to expedite attainment of the standards. Nevertheless, there may be nonattainment areas in which a requirement for RACT controls on certain stationary sources would not

[68] This approach is consistent with EPA's historical RACT policy outlined in the 1992 general preamble (57 FR 13541).

[69] Subpart 1 of part D of the CAA includes the general provision that States must adopt plans for nonattainment areas which require implementation of RACM and RACT. The EPA has interpreted the provision to require States to include RACM and RACT measures to the extent that such measures will meet RFP requirements and will expedite attainment. In Subpart 2 specifically governing one-hour ozone nonattainment areas, however, the Act requires States to implement RACT on certain stationary sources independent of the emissions reductions needed to attain the applicable standard.

[70] A recent decision by the U.S. Court of Appeals for the District of Columbia has upheld this interpretation for RACM. The Court agreed with EPA's view that the statute does not require a State to adopt reasonably available control measures without regard to whether they would facilitate RFP or would expedite attainment. *See Sierra Club* v. *EPA,* 294 F.3d 155 (DC Cir. 2002).

[71] ''State Implementation Plans; General Preamble for the Implementation of Title I of the CAA Amendments of 1990; Proposed Rule.'' April 16, 1992 (57 FR 13498). See also *Sierra Club* v. *EPA,* 294 F.3d 155 (DC Cir. 2002).

advance attainment by at least one year. For example, there may be nonattainment areas that are within a few tenths of a microgram of the standard and the State may determine that other local measures are adequate to bring the area into attainment as expeditiously as practicable, and that the absence of such controls will not significantly impact downwind States. In such areas, EPA believes that it might be reasonable to forego the requirement of RACT controls on certain stationary sources. Under this second alternative, each State would make that determination through its own fact specific RACT analysis in the attainment demonstration it submits to the Agency. EPA proposes that the RACT analysis under this option would not need to be a source-specific analysis, and instead could be conducted on a source-category basis. This alternative would provide greater flexibility for States to design local control programs for such areas.[72] EPA requests comment on all aspects of the second proposed option for RACT.

Third proposed alternative for RACT. The third proposed alternative for RACT would be a combination of the first two and is consistent with the RACT approach adopted in the final implementation rule for the 8-hour ozone program. Because of the importance EPA places on providing consistent policies between the ozone and $PM_{2.5}$ implementation programs, we propose this alternative as our preferred option.

The third proposed alternative would require States to conduct a RACT analysis and impose reasonably available controls for all affected stationary sources in the nonattainment area, only for those nonattainment areas with attainment dates more than five years from the date of designation. The same proposed suboptions with respect to the size of sources for consideration discussed under the first alternative would be included under this alternative as well.

For areas with an attainment date within five years of designation (e.g. by April 2010 for areas designated in late 2004), RACT would be required as described under the second alternative, in which States could decline to impose controls that would not otherwise be necessary to meet RFP requirements or to attain the $PM_{2.5}$ NAAQS as expeditiously as practicable.

EPA believes that this alternative, which is in effect a ''hybrid'' of the first two, provides important policy advantages. First, it recognizes that certain areas are projected to attain the standards within five years of designations predominantly due to federal emission reduction programs. This alternative enables such areas to decline to impose controls on certain categories of sources if their implementation would not provide for an advancement of the attainment date. Second, it recognizes that those areas that need an attainment date extension due to more serious nonattainment problems should be required to impose RACT controls on affected sources in return for receiving the extension. This alternative is consistent with the overall approach taken in the 1990 Clean Air Act amendments, such as subpart 2 for ozone, under which areas with more severe air quality problems are required to implement a broader range of control requirements, in conjunction with attainment dates that are farther into the future. EPA requests comment on all three proposed RACT alternatives presented above.

Factors to consider in determining RACT. States should consider a number of factors in analyzing whether or not RACT controls will help a given area to meet RFP requirements or to attain the standard as expeditiously as practicable, and in determining what would constitute RACT for a given source category. First, our understanding of $PM_{2.5}$ formation indicates that ambient pollutant levels are the result of emissions from a large number of varied sources of direct $PM_{2.5}$ and $PM_{2.5}$ precursors. Accordingly, each State should examine closely the universe of emissions sources in each nonattainment area and evaluate carefully whether RACT controls are appropriate for some or all of these sources, given the specific nature of the nonattainment problem in such area. We anticipate that States may decide upon RACT controls that differ from State to State, but that are the most effective given the relevant mixture of sources and potential controls in the respective nonattainment areas. So long as each State can adequately demonstrate that its chosen RACT approach will provide for meeting RFP requirements and for attainment of the NAAQS as expeditiously as practicable, we anticipate approving plans that may elect to control a somewhat different mix of sources or to implement somewhat different controls as RACT. Nevertheless, States should consider and address RACT measures developed for other areas or other States as part of a well reasoned RACT analysis. The EPA's own evaluation of State SIPs for compliance with the RACT and RACM requirements will include comparison of measures considered or adopted by other States.

Second, implementation of the $PM_{2.5}$ NAAQS is in its initial stages, and many of the designated $PM_{2.5}$ nonattainment areas are not current or former PM_{10} nonattainment areas. Thus, some existing stationary sources in these areas may currently be uncontrolled or undercontrolled for PM or PM precursors. Further, emissions controls for existing sources in these areas may focus primarily on particulate matter that is filterable at stack temperatures and thus may not adequately control condensable emissions. In addition, States should bear in mind that the controlled sources may have installed emission controls 15 years ago or more, and now there may be cost-effective opportunities available to reduce emissions further through more comprehensive and improved emissions control technologies, or through production process changes that are inherently lower in emissions.

Moreover, improved monitoring methods may enhance the ability of sources to maintain the effectiveness of installed emissions controls and to reduce emissions by detecting equipment failures more quickly. For example, State imposition of requirements for more frequent monitoring (e.g., continuous opacity monitors, PM continuous emissions monitors, etc.) may provide greater assurance of source compliance and quicker correction of inadvertent upset emissions conditions than existing approaches.

Third, even in former or current PM_{10} nonattainment areas, existing requirements for controlling direct PM emissions (*e.g.*, with a baghouse or electrostatic precipitator) may not have been revised significantly since the 1970's. When EPA established the PM_{10} standards in 1987, we stated in the General Preamble that it was reasonable to assume that control technology that represented RACT for total suspended particulates (TSP) should satisfy the requirement for RACT for PM_{10}. The rationale for this provision was that controls for PM_{10} and TSP would both be focused on reducing coarse particulate matter, and specifically that fraction of particulate matter that is solid (rather than gaseous or condensable) at typical stack

[72] EPA must initially rely on the States to provide the necessary analysis and documentation to show whether RACT measures would advance the attainment date at least one year. It should be noted that although the court upheld EPA's interpretation of § 172(c)(1) in *Sierra Club* v. *EPA, supra*, the court also concluded in that case that neither the local government authority nor EPA had provided an adequate analysis to support the determination that certain control measures were not in fact capable of advancing the attainment date for that area.

temperatures. However, emission controls to capture coarse particles in some cases may be less effective in controlling $PM_{2.5}$. For this reason, there may be significant opportunities for sources to upgrade existing control technologies [73] and compliance monitoring methods to address direct PM emissions contributing to fine particulate matter levels with technologies that have advanced significantly over the past 15 years.

Fourth, it will be important for States to conduct RACT determinations for stationary sources of $PM_{2.5}$ precursors as well as direct $PM_{2.5}$ emissions. A significant fraction of $PM_{2.5}$ mass in most areas violating the standards is attributed to secondarily-formed components such as sulfate, nitrate, and carbonaceous PM, and EPA believes that certain stationary sources of these precursors in nonattainment areas currently may be poorly controlled. Accordingly, to address these precursors, States should review existing sources for emission controls or process changes that could be reasonably implemented to reduce emissions from activities such as fuel combustion, industrial processes, and solvent usage.

Finally, EPA believes that the proper and timely implementation of RACT by the States is a relevant criterion in assessing State requests for any attainment date extension of the applicable attainment date. Because EPA anticipates that most States will conclude that RACT controls are appropriate and consistent with meeting RFP requirements and with expeditious attainment of the standards, EPA assumes that States will include a detailed RACT analysis in connection with any extension request. The EPA proposes that any State that seeks an attainment date extension of 1 to 5 years beyond the initial 5-year attainment date provided in section 172(a)(2) must, among other things, submit a demonstration satisfactory to EPA showing that the State has implemented all RACT for the appropriate sources in that State in order to meet RFP requirements and to provide for attainment of the $PM_{2.5}$ standards as expeditiously as practicable.

EPA requests comment on all aspects of the proposed alternatives and guidance for implementing the RACT requirement discussed above.

[73] For example, see past EPA guidance on $PM_{2.5}$ control technologies: Stationary Source Control Techniques Document for Fine Particulate Matter (EPA–452/R–97–001), EPA Office of Air Quality Planning and Standards, October 1998.

6. What factors should States consider in determining whether an available control technology is technically feasible?

The technological feasibility of applying an emission reduction method to a particular source should consider factors such as the sources's process and operating procedures, raw materials, physical plant layout, and any other environmental impacts such as water pollution, waste disposal, and energy requirements. For example, the process, operating procedures, and raw materials used by a source can affect the feasibility of implementing process changes that reduce emissions and the selection of add-on emission control equipment. The operation of, and longevity of, control equipment can be significantly influenced by the raw materials used and the process to which it is applied. The feasibility of modifying processes or applying control equipment also can be influenced by the physical layout of the particular plant. The space available in which to implement such changes may limit the choices and will also affect the costs of control.

Reducing air emissions may not justify adversely affecting other resources by increasing pollution of bodies of water, creating additional solid waste disposal problems or creating excessive energy demands. An otherwise available control technology may not be reasonable if these other environmental impacts cannot reasonably be mitigated. For analytic purposes, a State may consider a $PM_{2.5}$ control measure technologically infeasible if, considering the availability (and cost) of mitigative adverse impacts of that control on other pollution media, the control would not, in the State's reasoned judgment, provide a net benefit to public health and the environment. In many instances, however, $PM_{2.5}$ control technologies have known energy penalties and adverse effects on other media, but such effects and the cost of their mitigation are also known and have been borne by owners of existing sources in numerous cases. Such well-established adverse effects and their costs are normal and assumed to be reasonable and should not, in most cases, justify rejection of the potential $PM_{2.5}$ control technology. The costs of preventing adverse water, solid waste and energy impacts will also influence the economic feasibility of the $PM_{2.5}$ control technology.

EPA recommends that States evaluate alternative approaches to reducing emissions of particulate matter by reviewing existing EPA guidance [74] and other sources of control technology information. In EPA's 1998 guidance, the design, operation and maintenance of general particulate matter control systems such as electrostatic precipitators, fabric filters, and wet scrubbers are presented. The filterable particulate matter collection efficiency of each system is discussed as a function of particle size. Information is also presented regarding energy and environmental considerations and procedures for estimating costs of particulate matter control equipment. Secondary environmental impacts are also discussed. Because control technologies and monitoring approaches are constantly being improved, the State should also consider more updated or advanced technologies not referenced in this 1998 guidance when conducting a RACT determination. Emissions reductions may also be achieved through the application of monitoring and maintenance programs that use critical process and control parameters to verify that emission controls are operated and maintained so that they more continuously achieve the level of control that they were designed to achieve.[75]

7. What factors should States consider in determining whether an available control technology is economically feasible?

Economic feasibility considers the cost of reducing emissions and the difference between the cost of the emissions reduction approach at the particular source and the costs of emissions reduction approaches that have been implemented at other similar sources. Absent other indications, EPA presumes that it is reasonable for similar sources to bear similar costs of emission reduction. Economic feasibility for RACT purposes is largely determined by evidence that other sources in a source category have in fact applied the control technology or process change in question.

The capital costs, annualized costs, and cost effectiveness of an emission reduction technology should be considered in determining its economic feasibility. The EPA Air Pollution

[74] Stationary Source Control Techniques Document for Fine Particulate Matter (EPA–452/R–97–001), EPA Office of Air Quality Planning and Standards, October 1998. See also: Controlling SO_2 Emissions: A Review of Technologies (EPA/600/R–00/093), EPA Office of Research and Development, November 2000.

[75] See EPA's website for more information: *http://www.epa.gov/ttn/emc/monitor.html.*

Control Cost Manual[76] describes procedures for determining these costs for stationary sources. The above costs should be determined for all technologically feasible emission reduction options.

States may give substantial weight to cost effectiveness in evaluating the economic feasibility of an emission reduction technology. The cost effectiveness of a technology is its annualized cost ($/year) divided by the emissions reduced (*i.e.*, tons/year) which yields a cost per amount of emission reduction ($/ton). Cost effectiveness provides a value for each emission reduction option that is comparable with other options and other facilities.

In considering what level of control is reasonable, EPA is not proposing a fixed dollar per ton cost threshold for RACT. We believe that what is considered to be a reasonable control level should vary based on the severity of the nonattainment problem in the area. In addition, we believe that in determining what are appropriate emission control levels, the State should also consider the collective health benefits that can be realized in the area due to projected improvements in air quality. The health benefits associated with reducing $PM_{2.5}$ levels are significant. Using estimation techniques reviewed and deemed reasonable by the National Academy of Sciences, national monetized health benefits resulting from reductions in PM concentrations are estimated to exceed emission control costs by a factor of three to thirty times, depending on the particular controls on sources of PM precursor emissions.[77] This approach is consistent with EPA's view that RACT may be related to what is needed for attainment. That is, for options where RACT is met where an area demonstrates timely attainment and areas with more severe air quality problems typically will need to adopt more stringent controls, RACT level controls in such areas will require controls at higher cost effectiveness levels ($/ton) than areas with less severe air quality problems.

Areas with more serious air quality problems typically will need to obtain greater levels of emissions reductions from local sources than areas with less serious problems, and it would be expected that their residents could realize greater health benefits. For this reason, we believe that it will be reasonable and appropriate for areas with more serious air quality problems and higher design values to impose emission reduction requirements with generally higher costs per ton of reduced emissions than the cost of emissions reductions in areas with lower design values.

If a source contends that a source-specific RACT level should be established because it cannot afford the technology that appears to be RACT for other sources in its source category, the source should support its claim with such information regarding the impact of imposing RACT on:

1. Fixed and variable production costs ($/unit),
2. Product supply and demand elasticity,
3. Product prices (cost absorption vs. cost pass-through),
4. Expected costs incurred by competitors,
5. Company profits, and
6. Employment costs.

8. How should condensable emissions be treated in RACT determinations?

Certain commercial or industrial activities involving high temperature processes (fuel combustion, metal processing, cooking operations, etc.) emit gaseous pollutants into the ambient air which rapidly condense into particle form. The constituents of these condensed particles include, but are not limited to, organic material, sulfuric acid, and metals. In general, condensable emissions are taken into account wherever possible in emission factors used to develop national emission inventories, and States are required under the consolidated emissions reporting rule (CERR)[78] to report condensable emissions in each inventory revision. Currently, some States have regulations requiring sources to quantify condensable emissions and to implement control measures for them, and others do not. In 1990, EPA promulgated Method 202 in Appendix M of 40 CFR Part 51 to quantify condensable particulate matter emissions.

EPA is in the process of developing detailed guidance on a new test method which quantifies and can be used to characterize the constituents of the $PM_{2.5}$ emissions including both the filterable and condensable portion of the emissions stream. (See section III.P for more information.) When a source implements either of these test methods addressing condensable emissions, the State will likely need to revise the source's emissions limit to account for those emissions that were previously unregulated. For the purposes of determining RACT applicability and establishing RACT emission limits, EPA intends to require the State to adopt the new test method once EPA issues its detailed guidance for use by all sources within a $PM_{2.5}$ nonattainment area that are required to reduce emissions as part of the area's attainment strategy. The EPA requests comment on this proposal with respect to addressing condensable emissions in $PM_{2.5}$ RACT determinations.

9. What are the required dates for submission and implementation of RACT measures?

States must submit adopted RACT rules to EPA within three years of designation, at the same time as the attainment demonstration due in April 2008. States should also implement any measures determined to be RACT expeditiously, as required by section 172. Implementation of RACT measures should start no later than the beginning of the final year of the three-year period on which attainment is to be assessed. (See section I.11. for a discussion of RACT for sources subject to CAIR.) For example, if an area has an attainment date of April 2010, then any required RACT measures should be in place and operating no later than the beginning of 2009, so that their effect will be reflected in the air quality levels for calendar year 2009. (See related-discussion in section I.11. on the interaction of CAIR and RACT.) If the area has recorded air quality levels above 15.1 μg/m3 for the first two years of the three-year period, then it is possible that implementation of the emission controls in the third year could enable the area to have improved air quality below 15.1 and thereby be eligible to receive a one-year attainment date extension.

While EPA expects that States will implement required RACT controls by January 2009 in most situations, there may be cases where additional implementation time is needed to implement an innovative control measure or to achieve a greater level of reduction through a phased approach. If an area has provided an adequate demonstration showing that an attainment date extension would be appropriate, then the area may consider phasing-in certain RACT controls after January 2009. Implementation of

[76] *EPA Air Pollution Control Cost Manual—Sixth Edition* (EPA 452/B–02–001), EPA Office of Air Quality Planning and Standards, Research Triangle Park, NC, Jan 2002.

[77] U.S. EPA, 2003 Technical Support Package for Clear Skies; U.S. EPA, 2003. See also: Draft Regulatory Impact Analysis: Control of Emissions from Nonroad Diesel Engines. United States Environmental Protection Agency Office of Air and Radiation EPA420-R–03–008, April 2003.

[78] The consolidated emissions reporting rule was published in the **Federal Register** on June 10, 2002, pages 39602–39616.

selected RACT controls after January 2009 would only be allowable if the state can show why additional time is needed for implementation, and still would need to be on a schedule that provides for expeditious attainment. In no event could the area wait to implement RACT controls until the last few years prior to the attainment date. EPA requests comments on this approach for RACT implementation.

10. Under the $PM_{2.5}$ implementation program, does a State need to conduct a RACT determination for an applicable source that already has a RACT determination in effect?

In $PM_{2.5}$ nonattainment areas, States are required to implement the RACT requirement to reduce emissions of direct $PM_{2.5}$ and $PM_{2.5}$ precursors from applicable sources. Under this proposal, RACT would need to be addressed for emissions of SO_2 and NO_X in all areas. For VOC and ammonia, this proposal would require RACT to be addressed only in those areas for which EPA or the State provides a determination that the pollutant is a significant contributor to the local $PM_{2.5}$ problem.

The sources subject to RACT in a particular nonattainment area will depend on which RACT option described in section III.I.5 is adopted in the final rule. Under EPA's preferred option, an area projected to attain within five years after designations (by April 2010) according to the attainment demonstration would need to impose RACT controls only on those sources as necessary to attain as expeditiously as practicable. An area projected to attain in more than five years would be required to conduct RACT determinations for all sources exceeding a particular emissions threshold.

EPA anticipates that for a number of sources located in a $PM_{2.5}$ nonattainment area, the State would have previously conducted RACT determinations for VOC or NO_X under the 1-hour ozone standard, or for direct PM_{10} emissions under the PM_{10} standards. Some of the RACT determinations established under these other programs would have been made more recently, while other determinations will be more than ten years old. In some cases, a new RACT determination would call for the installation of similar control technology as the initial RACT determination because the relevant pollutant was addressed, the same emission points were reviewed, and the same fundamental control techniques would still have similar costs. In other cases, a new RACT analysis could determine, for example, that better technology has become available, and that cost-effective emission reductions are achievable.

For these reasons, EPA recommends that the State should closely review any existing RACT determinations established under another NAAQS program. We believe States must consider new information that has become available since the original RACT determination. EPA proposes that where major sources or source categories were previously reviewed and sources subsequently installed controls to meet the RACT requirement for the pollutant(s) in question, States would be allowed to accept the initial RACT analysis as meeting RACT for purposes of the $PM_{2.5}$ program, provided that the State submits as part of its SIP revision a certification with appropriate supporting information that it previously met the RACT requirement for these sources as part of its prior SIP revision, and that the previous determination currently represents an appropriate RACT level of control for $PM_{2.5}$. In the alternative, the State should revise the SIP to reflect a modified RACT requirement for specific sources or source categories.

In any case where additional information on updated control technologies is presented as part of notice-and-comment rulemaking, including a RACT SIP submittal for sources previously controlled, States (and EPA) must consider the additional information as part of that rulemaking. In cases where the State's RACT analysis previously concluded that no additional controls were necessary, we propose that a new RACT determination is required for that source. The new RACT determination is needed to take into account that newer, cost-effective control measures may have become available for sources that were not previously regulated. EPA believes it may not always be sufficient for a State to rely on technology guidance that is several years old in conducting new RACT determinations. States should take into account appropriate information about updated control technologies as well as any additional information obtained through public comments when conducting RACT determinations for $PM_{2.5}$.

EPA requests comment on the policy approach described above for taking existing RACT determinations into account, and on the following questions: (1) Should new RACT determinations be required for all existing determinations that are older than a specified amount of time (such as 10 years old)?; (2) what supporting information should a state be required to submit as part of its certification to demonstrate that a previous RACT analysis meets the RACT requirement currently for purposes of the $PM_{2.5}$ program?

Prior BACT/LAER/MACT determinations. In many cases, but not all, best available retrofit technology (BACT) or lowest achievable emission rate (LAER) provisions for new sources would assure at least RACT level controls on such sources. The BACT/LAER analyses do not automatically ensure compliance with RACT since the regulated pollutant or source applicability may differ and the analyses may be conducted many years apart. States may, however, rely on information gathered from prior BACT or LAER analyses for the purposes of showing that a source has met RACT to the extent the information remains valid. We believe that the same logic holds true for emissions standards for municipal waste incinerators under CAA section 111(d) and NSR/PSD settlement agreements. Where the State is relying on these standards to represent a RACT level of control, the State should present their analysis with their determination during the SIP adoption process.

In situations where the State has determined VOC to be a significant contributor to $PM_{2.5}$ formation in an area, compliance with MACT standards may be considered in VOC RACT determinations. For VOC sources subject to MACT standards, States may streamline their RACT analysis by including a discussion of the MACT controls and relevant factors such as whether VOCs are well controlled under the relevant MACT air toxics standard, which units at the facility have MACT controls, and whether any major new developments in technologies or costs have occurred subsequent to the MACT standards. We believe that there are many VOC sources that are well controlled (*e.g.*, through add-on controls or through substitution of non-VOC non-HAP materials for VOC HAP materials) because they are regulated by the MACT standards, which EPA developed under CAA section 112. Any source subject to MACT standards must meet a level that is as stringent as the best-controlled 12 percent of sources in the industry. Examples of these HAP sources that may effectively control VOC emissions include organic chemical plants subject to the hazardous organic NESHAP (HON), pharmaceutical production facilities, and petroleum refineries.[79] We believe

[79] However, there are some MACT categories for which it may not be possible to determine the

Continued

that, in many cases, it will be unlikely that States will identify emission controls more stringent than the MACT standards that are not prohibitively expensive and thus unreasonable. We believe this will allow States, in many cases, to rely on the MACT standards for purposes of showing that a source has met VOC RACT.

Year-round controls. In some cases, sources subject to NO_X RACT for PM will also be subject to controls under the NO_X SIP Call. We proposed in the 8-hour ozone implementation rule that certain sources which have installed emission controls to comply with the NO_X SIP call would be deemed to meet NO_X RACT for the purposes of the 8-hour ozone implementation program. Some of these sources subject to the NO_X SIP call may choose to control NO_X emissions only or primarily during the ozone season. For purposes of PM, however, EPA believes that the operation of emission controls only or primarily during the ozone season would not constitute RACT for PM purposes. Instead, EPA believes that RACT for PM should be year-round operation of controls because PM concentrations are a year-round problem and NO_X emissions have a more significant role in PM formation in cooler temperatures.

As described above, the PM RACT determination is made on a case-by-case basis. For sources subject to both the NO_X SIP call and NO_X RACT for PM, we believe that, in most cases, the additional costs of running the NO_X SIP call controls year-round would be feasible and the cost effectiveness would be lower than the average cost effectiveness for many other sources subject to PM RACT. For example, if a source that has installed selective catalytic reduction to comply with the NO_X SIP call extends operation of the control equipment from just during the ozone season to year-round, it would only incur additional operating costs but would achieve substantial additional emissions reductions. Thus, where sources have installed controls to meet the NO_X SIP call, we believe that in most cases, RACT for PM would require running the emission controls year-round.

11. What policies affect compliance with RACT for electric generating units?

Overview. The Clean Air Interstate Rule (CAIR) (70 FR 25162) provides for a cap-and-trade mechanism that States may choose to use to achieve the emissions reductions required by CAIR. Under the cap-and-trade program, electric generating units (EGUs) [80] must collectively reduce their emissions of SO_2 and NO_X across a multi-state area in order to comply with emissions caps for these pollutants. A source subject to a cap-and-trade program such as the CAIR trading program generally has the option of installing emissions control technology, adopting some other strategy (such as using lower sulfur coal) to control its emissions, or purchasing emissions allowances and thereby effectively paying another source covered by the cap to reduce its emissions. The initial CAIR NO_X cap is effective in 2009, and the initial CAIR SO_2 cap is effective in 2010. However, EPA analysis shows that sources covered by the SO_2 trading program will make significant reductions in their SO_2 emissions well before 2010 because they are able to ''bank'' these early reductions. EPA also expects some early NO_X reductions due to the opportunity for states to use their portion of the compliance supplement pool to award credit for early annual NO_X reductions.

Although we expect that many EGUs that will be subject to mandatory requirements under the cap-and-trade program under CAIR will not be located in $PM_{2.5}$ nonattainment areas, some of these units will be located in nonattainment areas and thus will be subject to RACT requirements for large stationary sources. As discussed elsewhere in this section, RACT is one of the basic subpart 1 control requirements for nonattainment areas. Under the Clean Air Act, a source subject to CAIR that is located within a nonattainment area is also subject to the nonattainment RACT provisions for emissions of $PM_{2.5}$ and nonattainment plan precursors (including SO_2 and, in the absence of a finding that NO_X is not a significant contributor, NO_X).

In this rulemaking, EPA is proposing to determine that in states that fulfill their CAIR emission reductions entirely through emission reductions from EGUs, CAIR would satisfy SO_2 RACT requirements for EGU sources in eastern $PM_{2.5}$ nonattainment areas covered by CAIR. EPA is proposing a similar finding for NO_X RACT for EGUs, subject to a requirement that existing SCRs in those nonattainment areas be operated year-round beginning in 2009. The EPA believes that the SIP provisions for those sources meet the ozone Nox RACT requirement. A State that is relying on this conclusion for the affected sources should document this reliance in its RACT SIP.

SO_2 RACT. As stated elsewhere in this proposal, RACT controls in $PM_{2.5}$ nonattainment areas should be in place and operational by the beginning of 2009 unless an attainment date extension is obtained. As discussed more fully in the CAIR final rulemaking notice, EPA has set the 2009 and 2010 CAIR caps at a level that will require EGUs to install emission controls on the maximum total capacity on which it is feasible to install emission controls by those dates. Although the actual SO_2 cap does not become effective until 2010, we have designed ''banking'' provisions in CAIR so that covered EGUs will begin to reduce their SO_2 emissions almost immediately after CAIR is finalized, and will continue steadily to reduce their emissions in anticipation of the 2010 cap and the more stringent cap that becomes effective in 2015. The 2015 SO_2 and NO_X caps are specifically designed to eliminate all SO_2 and NO_X emissions from EGUs that are highly cost effective to control (the first caps represent an interim step toward that end). In general, we expect that the largest-emitting sources will be the first to install SO_2 and NO_X control technology and that such control technology will gradually be installed on progressively smaller-emitting sources until the ultimate cap is reached.

We do not believe that requiring source-specific RACT controls on EGUs in nonattainment areas will reduce total SO_2 and NO_X emissions from sources covered by CAIR below the levels that would be achieved under CAIR alone. In fact, if states chose to require smaller-emitting sources in nonattainment areas to meet source-specific RACT requirements by 2009, they would likely use labor and other resources that would otherwise be used for emission controls on larger sources. Because of economies of scale, more boiler-makers may be required per megawatt of power generation for smaller units than larger units. In this case, the imposition of source-specific RACT on smaller emitting sources by 2009 could actually reduce the amount of ''banking'' that would otherwise occur and result in higher SO_2 emissions in 2009 as compared to the level that would result from CAIR alone.

In any event, the imposition of source-specific control requirements on a limited number of sources also covered by a cap-and-trade program would not reduce the total emissions from sources subject to the program. Under a cap-and-trade program such as CAIR, there is a given number of

degree of VOC reductions from the MACT standard without additional analysis; for example, the miscellaneous metal parts and products (40 CFR part 60, subpart MMMM) due to the uncertainty of the compliance method that will be selected.

[80] Under CAIR, states may allow other units to opt into the trading program.

allowances that equals a given emission level. Source-specific control requirements may affect the temporal distribution of emissions (by reducing banking and thus delaying early reductions) or the spatial distribution of emissions (by moving them around from one place to another), but it does not affect total emissions. If source-specific requirements were targeted at the units that can be controlled most cost-effectively, then the imposition of source-specific controls would likely achieve the same result as the cap-and-trade program. If not, however, the imposition of source-specific requirements would make any given level of emission reduction more costly than it would be under the cap-and-trade program alone. Thus, the imposition of source-specific RACT on EGUs covered by CAIR would not reduce total emissions, but would likely achieve the same total emission reductions in a more costly way.

We recognize that the RACT provisions are an important tool to help nonattainment areas come into attainment. However, neither EPA nor the States have determined what would constitute SO_2 and NO_X RACT on EGUs for the purpose of the $PM_{2.5}$ implementation program. Therefore, it is not possible to determine at this time whether, for any particular $PM_{2.5}$ nonattainment area, CAIR or the imposition of RACT on EGUs located in that area would achieve greater emissions reductions from those specific EGUs. We are confident, however, that CAIR will provide substantial SO_2 emissions reductions in most nonattainment areas in the CAIR region, as well as substantial SO_2 reductions in attainment areas, which together will substantially improve air quality in $PM_{2.5}$ nonattainment areas in the CAIR region. EPA requests comment on this option in which EGUs located within $PM_{2.5}$ nonattainment areas would be considered to meet their SO_2 RACT requirements through participation in the CAIR trading program.

NO_X RACT. With respect to NO_X, we propose to find that, for EGUs subject to CAIR SIPs, CAIR satisfies NO_X RACT in $PM_{2.5}$ nonattainment areas, except that in addition, the state's SIP must ensure that any source that has selective catalytic reduction (SCR) technology for summertime NO_X control will operate the SCR year-round, starting by the beginning of 2009. In the CAIR final rulemaking notice, EPA found that the operation of existing SCRs on a year-round basis, instead of operating them only during the ozone season, could achieve NO_X reductions at low cost relative to other available NO_X controls for EGUs or for other sectors. EPA projected that power generators would employ this control measure for CAIR compliance. Based on this control opportunity, EPA estimated the average cost of non-ozone-season NO_X control at $500/ton. These considerations support a finding that RACT should include year-round operation of existing SCRs that are located in $PM_{2.5}$ nonattainment areas. ''Existing'' SCR would be defined to include those in place by the date of proposal of this rule; using the proposal date rather than the final rule date would avoid creating a potential incentive to delay installation of new SCR. Because all areas violate the annual form of the $PM_{2.5}$ standard and public health can be affected by high $PM_{2.5}$ levels in the winter as well as the summer, we believe that year-round operation of existing SCR in nonattainment areas will provide additional health benefits for relatively low dollar cost per ton of pollutant reduced.

The Act requires RACT to be implemented as expeditiously as practicable (and, in the case of areas without an attainment date extension, no later than 2009). EPA has considered the following factors in proposing January 1, 2009, as the compliance date for year-round operation of existing SCR. Depending on the source, year-round operation of existing SCR involves either no alteration or relatively minor alteration of existing equipment. For EGUs where these alterations are needed, we expect the work to be conducted during a routine outage at a unit, which typically occurs one or more times a year. Finally, a year-round operation requirement would not be legally applicable to individual sources until the RACT SIP is adopted. We note that all EGUs in $PM_{2.5}$ nonattainment areas would be on notice from the date this rule is finalized that RACT SIPs must require year-round operation of existing SCRs. Taking these factors into account, EPA believes that a January 1, 2009, implementation date would provide ample lead time to enable existing SCRs in $PM_{2.5}$ nonattainment areas to be operated year-round, including those SCRs for which physical alterations are necessary. EPA requests comment on the proposal to find that for an EGU located in a $PM_{2.5}$ nonattainment area in the CAIR region and having selective catalytic reduction control technology to reduce NO_X emissions, compliance with CAIR satisfies NO_X RACT, provided the State's SIP ensures that the source operates the SCR year-round, starting no later than the beginning of 2009.

RACT for sources in states requiring non-EGU reductions for CAIR compliance or allowing non-EGUs to ''opt into'' CAIR. Under CAIR, a State may elect to meet its state caps for SO_2 and NO_X emissions by requiring emissions reductions from SO_2 and NO_X sources that are not electric generating units. A second, separate option allowed under CAIR is that the state may elect to allow non-EGU sources to voluntarily enter the EPA-administered CAIR trading program through an opt-in provision in the CAIR model rule. If only part of a state's CAIR reductions are achieved by EGUs, and the balance of the reductions obtained from non-EGU sources, then the stringency of CAIR EGU control would be diminished to some extent (an amount that cannot be determined until the State submits a SIP indicating which sources are participating in the program). Therefore, in these cases, the above rationale for our judgment that CAIR satisfies RACT would not apply. For this reason, a state selecting either of the above non-EGU options in implementing CAIR would need to conduct RACT analyses for EGUs in its $PM_{2.5}$ nonattainment areas (either on an individual basis, or using the averaging approach within the nonattainment area) to determine whether the lesser EGU reductions satisfy RACT.

For clarity, it should be noted that a State has authority to conduct its own RACT analysis for any source. Also, the proposed approach to CAIR and RACT would not prevent a state from requiring beyond-RACT controls to provide for expeditous attainment.

RACT averaging concept. In addition to the option above relating to EGU compliance with CAIR and RACT for $PM_{2.5}$, we propose to provide states with a nonattainment area RACT averaging option for EGU's previously available in the ozone program. We also propose to make this option available to non-EGU categories for which accountability of an averaging system could be assured.

The EPA's NO_X RACT guidance (NO_X General Preamble at 57 FR 55625) under the ozone program encourages States to develop NO_X RACT programs for EGU's that are based on ''areawide average emission rates.'' Thus, EPA's 1992 policy for ozone RACT provides for States to submit a demonstration as part of their RACT submittal showing that the weighted average emission rate from EGU sources in the nonattainment area subject to RACT—including sources reducing emissions to meet the NO_X SIP Call or CAIR NO_X requirements—meet RACT requirements. Under this approach, emission reductions within the nonattainment area must be at least

equivalent to the emission reductions that would result from collective application of source-specific RACT within the nonattainment area.

We envision that the state would first identify presumptive RACT for a set of emissions sources, as EPA has not issued guidance on RACT for $PM_{2.5}$ purposes. The state would then propose a program that would assure collective emissions reductions equivalent or greater than the emissions reductions that would be achieved if the presumptive RACT level were met by each individual source.

EPA proposes that the approach described above be available as a way for states to show that EGUs in $PM_{2.5}$ nonattainment areas comply with RACT for NO_X and SO_2. Similarly, EPA proposes that this option be available to non-EGUs. As with other economic incentive programs, an approvable program would be required to ensure emissions reductions that are quantifiable, surplus, enforceable and permanent, and provide an environmental benefit.[81]

We generally solicit comment on whether RACT averaging should be permitted in $PM_{2.5}$ areas for EGUs and non-EGUs, and which non-EGU source categories have adequate monitoring methods available to provide for accountability in an emissions trading program. In addition, we solicit comment on the following topics:

- Whether RACT averaging in $PM_{2.5}$ nonattainment areas, if permitted for both EGUs and non-EGUs, should be separate for EGUs and for non-EGUs, or whether averaging among EGUs and non-EGUs should be permitted
- Whether a collective approach to RACT should be implemented through a rate-based approach (mass of emissions per activity level) involving weighted average emission rates (e.g., pounds of NO_X per MMBtu of heat input), or through a cap-and-trade approach that controls total emissions regardless of activity level.
- The appropriate averaging period for showing compliance with RACT for $PM_{2.5}$ purposes

12. Is EPA developing $PM_{2.5}$ control techniques guidelines for specific source categories?

To date, EPA has not developed a series of control techniques guidelines for specific source categories for the purposes of $PM_{2.5}$ implementation. However, there are a number of sources of information on recent control technologies and other approaches for reducing $PM_{2.5}$ and precursor emissions from stationary sources that are available to States and Tribes and can be helpful in making RACT determinations on a source category or source-specific basis. These sources of information include EPA's 1998 guidance document on stationary source control measures, a 1996 particulate matter ''Menu of Options'' document by STAPPA/ALAPCO,[82] and the EPA's Clean Air Technology Center website.[83] The Clean Air Technology Center website includes a wide variety of control technology information, including summaries of previous RACT determinations for other NAAQS programs, as well as assessments for best available control technology (BACT) and lowest achievable emissions rate (LAER) under the NSR and prevention of significant deterioration programs.

Under the implementation program for the 1-hour ozone standard, a number of control techniques guidance (CTG) and alternative control technology (ACT) documents have been developed for sources of NO_X and VOC over the past 25 years. (CTGs include a presumptive RACT level while ACTs do not. However, ACTs are intended to help States in making RACT determinations.) Over a five year period, 1991–94, EPA issued nine alternative control technique guideline documents for large stationary sources of NO_X. In 2000, updates to the NO_X ACT documents were completed for stationary internal combustion engines and cement kilns. In addition, EPA issued a number of CTGs in the 1980's for various source categories of NO_X and VOC.

As discussed in section III.I.10 above, EPA recognizes that control technology guidance for certain source categories has not been updated for many years. Section 183(c) of the CAA, which addresses control technologies to address ozone nonattainment problems, requires EPA to ''revise and update such documents as the Administrator determines necessary.'' As new or updated information becomes available States should consider the new information in their RACT determinations. A State should consider the new information in any RACT determinations or certifications that have not been issued by the State as of the time such updated information becomes available.[84]

In addition, EPA is considering related recommendations from the Air Quality Management Work Group to the Clean Air Act Advisory Committee (CAAAC) dated January 2005. One of the recommendations to the CAAAQ is that ''for the SIPs States are required to submit over the next several years, EPA and States, locals, and Tribes should promote the consideration of multipollutant impacts, including the impacts of air toxics, and where there is discretion, select regulatory approaches that maximize benefits from controlling key air toxics, as well as ozone, $PM_{2.5}$ and regional haze.'' As part of this effort, EPA intends in the future to develop updated technology guidance with respect to source categories emitting multiple pollutants in large amounts. At this time, however, we think it is unlikely that updated technology guidance will be available prior to 2006. The EPA also intends to maintain an updated list of references for new $PM_{2.5}$ control technology options. We request that commenters submit any additional references for $PM_{2.5}$ control technology information that may be useful for state program implementation efforts.

We also have provided STAPPA/ALAPCO with funding to update its 1996 Particulate Matter Menu of Options document with additional information regarding control measures to reduce $PM_{2.5}$ and its precursors. STAPPA/ALAPCO will be able to draw on the information and experience of its broad national membership in developing this updated guidance document for $PM_{2.5}$. While we anticipate that this guidance document will provide very useful updated information for regulatory agencies and affected sources, the specifications in this privately-issued document will not be binding on States, sources, or EPA.

13. Background for RACM

The proposed approach for implementing the RACM requirement for $PM_{2.5}$ is generally consistent with the approach followed under other NAAQS implementation programs. Under this approach, the State is required to provide a demonstration in its SIP that it has adopted all reasonably available measures needed to meet RFP and to attain the standard as expeditiously as

[81] Economic incentive program guidance, ''Improving Air Quality With Economic Incentive Programs,'' January 2001.

[82] *Controlling Particulate Matter Under the Clean Air Act: A Menu of Options*, STAPPA/ALAPCO, July 1996.

[83] See EPA's website at *http://www.epa.gov/ttn/catc* for the Clean Air Technology Center and RACT/BACT/LAER Clearinghouse.

[84] Available at: *http://www.epa.gov/air/caaac/aqm.html#library* in response to the recent National Research Council report on *Air Quality Management in the United States* (January 2004) [available for sale; individual pages available for viewing at *http://www.nap.edu/books/0309089328/html*].

practicable. The demonstration should show that there are no additional reasonable measures available that would advance the attainment date by at least one year or contribute to RFP for the area. Reasonable measures are those measures that are technologically and economically feasible within the nonattainment area.

Under section 172, the attainment date for a nonattainment area is presumed to be within five years or less after the effective date of designation of the area (e.g., no later than April 2010 for the final designations December 2004). Each State is required to evaluate all RACM in the area to determine if any such measures could contribute to RFP or attainment as expeditiously as practicable. If this evaluation of all RACM finds that the State will not be able to demonstrate attainment within five years of designation based on the severity of the problem or the availability or feasibility of implementing controls, then the State may request an attainment date extension. The EPA may extend the attainment date for a period of 1 to 5 years, provided the State has presented an adequate demonstration showing they will implement all RACT and RACM as expeditiously as practicable, and still need additional time to attain.

14. What is the proposed approach for implementing RACM?

The State should begin the process of determining RACM by identifying all available control measures in the nonattainment area. RACM can apply to mobile sources, area sources, and stationary sources not already subject to $PM_{2.5}$ RACT requirements. If the State receives substantive public comment demonstrating through appropriate documentation that other specific control measures may be available for existing emissions sources or activities in the area, then the State or local agency must also closely review those additional control measures and determine if they are reasonably available for the area in light of local circumstances.

After the universe of available measures have been identified for the sources in the area, the State should evaluate them to determine whether implementation of such measures is technically and economically feasible, and whether the measure will contribute to advancing the attainment date. The State should consider the feasibility of partial implementation of certain measures when ''full'' implementation would be infeasible. For example, if a State is considering diesel retrofits of school buses to be RACM for an area, it may not be feasible to retrofit all school buses in the nonattainment area, but it may be feasible to retrofit buses for specific school districts. The burden is with the State to provide a demonstration to EPA containing the justification and supporting documentation describing which measures it has determined to be RACM, and which it has not.

Because the local circumstances for each area (e.g., design value, variety of emissions sources, contribution of each $PM_{2.5}$ precursor to overall $PM_{2.5}$ mass) will be different, the set of measures that constitute RACM are expected to vary from area to area. We anticipate that what may be considered RACM in one area may not be considered RACM in another. For example, certain transportation control measures, such as high occupancy vehicle (HOV) lanes, may be appropriate in a densely populated urban area with a significant commuting population, whereas HOV lanes may not be appropriate in a less densely populated suburban county.

In any case, the State or local agency will have the initial responsibility for demonstrating to EPA that the area has adopted all reasonably available measures so that the area will achieve RFP and attain the standards as expeditiously as practicable, in accordance with applicable policy and guidance for attainment demonstrations and modeling. In reviewing the State's selection of measures for RACM, or determination that certain measures are not RACM, EPA may supplement the rationale of the State or provide an alternative reason for reaching the same conclusion as the State, where appropriate.

In the past under other SIP programs, there have been instances where a State proposed to reject a single measure under consideration as RACM because the emission reduction benefits from that measure alone would not advance the attainment date by one year. The EPA does not believe this approach is appropriate under section 172. In the past, EPA has historically interpreted the RACM requirement as requiring the collective evaluation of measures and the assessment of whether they will advance the attainment date when taken together. EPA believes this approach is appropriate for implementing the $PM_{2.5}$ program.

In a RACM assessment, the State should not reject an individual measure unless the State can show that it has evaluated the collective effect of that measure plus all other available control measures to determine whether implementing those measures together would advance the attainment date. The State's analysis should provide a reasoned justification for rejecting any available control measures. The supporting information must show why each rejected measure, including any measure raised as part of the State's public hearing or public comment process, is infeasible or unreasonable, or will not contribute to advancing attainment by one year.

If, for example, a State determines that there are six available control measures that are technically and economically feasible, yet when implemented together they would not contribute to RFP or advance the attainment date, then the state would not be required to adopt the measures as RACM. On the other hand, suppose a State determines that there are ten available control measures that are technically and economically feasible and collectively these measures would advance the attainment date by more than a year but less than two years. If the State determines that the collective implementation of only seven of the measures would still advance the attainment date by at least one year, then the state only would be required to adopt the seven measures and not all ten.

EPA emphasizes the importance for States to provide credible and thorough RACM analyses as part of their SIP demonstrations, complete with adequate supporting information and rationale supporting the State's inclusion or rejection of control measures. Recent experience with other SIP programs has shown that members of the public may bring legal challenges against the State if the State fails to provide an adequate technical analysis and supporting information for RACM. We believe it is essential that the public have the benefit of reviewing credible State RACM analyses in order to be sure that emissions reductions will be achieved expeditiously and all requirements for RFP and timely attainment will be achieved.

In the CAIR rulemaking (May 12, 2005 (70 FR at 25221 *et seq.*), EPA found that the control installations projected to result from the CAIR NO_X and SO_2 caps in 2009 and 2010 would be as much as feasible from EGUs across the CAIR region by those dates. EPA concluded that the CAIR compliance dates represent an aggressive schedule that reflects the limitations of the labor pool, and equipment/vendor availability, and need for electrical generation reliability for installation of emission controls. States should recognize these constraints in developing their own compliance schedules for emission controls in meeting their CAIR and

RACT responsibilities. However, the CAIR trading program did not specify which sources should install emissions control equipment or reduce emissions rates to a specific level in order to meet the SO_2 and NO_X caps under CAIR.

Based on our experience developing the NO_X SIP call, CAIR, and the proposed Clear Skies legislation, we believe that many power companies will develop their strategies for complying with CAIR based, in part, on consultations with air quality officials in the areas in which their plants are located. Because power plants are generally major emission sources, the operators of those plants typically have ongoing relationships with state and local officials that will be involved in developing air quality plans. We are aware that, in the past, companies have worked with air quality officials to meet their emission control obligations under a cap-and-trade approach such as the NO_X SIP call while also addressing the concerns of air quality officials about the air quality impacts of specific plants. This has led to controlling emissions from power plants located in or near specific ozone nonattainment areas. A number of companies have indicated that such collaboration will be even more important as the States where they are located address multiple air quality goals (e.g., visibility, interstate air pollution, local attainment).

EPA expects similar consultations between States and power sector companies on the location of plants to be controlled under CAIR, considering local $PM_{2.5}$ and ozone attainment needs in planning for CAIR compliance. This consultation might reveal opportunities to provide improved air quality earlier for large numbers of people. Power companies may identify economic advantages in situating CAIR controls to help the local area attain; for example, it might need to control fewer facilities for the area to reach attainment. These benefits may outweigh any additional marginal costs the company might incur by forgoing controls on another more distant plant. In any event, the intent of these consultations would not be to upset market behavior or incentives. Rather, we anticipate that these consultations will affect individual control decisions for certain $PM_{2.5}$ areas. In this regard, EPA notes that CAIR SIPs will be due in 2006, while local attainment plans are proposed to be due in April 2008. EPA suggests that consultations on location of CAIR controls would be timely during state development of the CAIR SIP.

15. What factors should States consider in determining whether control measures are reasonably available?

Once the State has identified measures that are available for implementation in the nonattainment area, then it must evaluate those measures to determine whether implementation of such measures would be technically and economically feasible, and would collectively advance attainment. Many of the factors that the State should take into consideration in determining technical and economic feasibility are described earlier in sections 6 and 7 for RACT. Since RACM applies to area and mobile sources as well as stationary sources, the State should consider other factors as well in conducting its RACM analysis. For example, in many cases obtaining emissions reductions from area and mobile sources is achieved not by adding control technology to a specific emissions source, but by reducing the level of activity of a fleet of vehicles or by modifying a type of commercial process. In these situations, the State should also consider issues such as the social acceptability of the measure; local circumstances such as infrastructure, population, or workforce; and the time needed to implement the measure in light of the attainment date.

In regard to economic feasibility, EPA is not proposing a fixed dollar per ton cost threshold for RACM, just as it is not doing so for RACT. We believe that what is considered to be a reasonable emission reduction level can vary based on the severity of the nonattainment problem in the area and existing control measures in place. Where the severity of the nonattainment problem makes reductions more imperative or where essential reductions are more difficult to achieve, the acceptable cost of achieving those reductions could increase. In addition, we believe that in determining what are economically feasible emission reduction levels, the State should also consider the collective health benefits that can be realized in the area due to projected improvements in air quality. Areas with more serious air quality problems typically will need to obtain greater levels of emissions reductions from local sources than areas with less serious problems, and it would be expected that their residents could realize greater health benefits from such reductions. For this reason, we believe that it will be reasonable and appropriate for areas with more serious air quality problems and higher design values to impose emission reduction requirements with generally higher costs per ton than the cost of emissions reductions in areas with lower design values. In areas with existing control measures in place for the purpose of attaining the PM_{10} standards, the RACM analysis should evaluate the cost-effectiveness of additional control measures beyond those already being implemented.

Some nonattainment areas with 2001–2003 design values relatively close to the standard may be able to demonstrate through existing modeling analyses that they are projected to attain the standard within five years of the date of designation, based on the implementation of existing federally enforceable national and State measures alone (e.g., CAIR, national mobile source measures such as Tier II standards).

EPA believes that while areas projected to attain within five years of designation as a result of existing national measures should still be required to conduct a RACM analysis, such areas may be able to conduct a limited RACM analysis that does not involve additional air quality modeling. A limited analysis of this type could involve the review of available reasonable measures, the estimation of potential emissions reductions, and the evaluation of the time needed to implement these measures. If the State could not achieve significant emissions reductions by the beginning of 2008 due to time needed to implement reasonable measures or other factors, then it could be concluded that reasonably available local measures would not advance the attainment date. In lieu of conducting air quality modeling to assess the impact of potential RACM measures, existing modeling information could be considered in determining the magnitude of emissions reductions that could significantly affect air quality and potentially result in earlier attainment. If the State, in consultation with EPA, determines from this initial, more limited RACM analysis that the area may be able to advance its attainment date through implementation of reasonable measures, then the State must conduct a more detailed RACM analysis, involving air quality modeling analyses, to assess whether it can advance the attainment date.

16. What specific source categories and control measures should a State evaluate when determining RACM for a nonattainment area?

Section 172 does not provide a specific list of source categories and control measures that must be evaluated for RACM for $PM_{2.5}$. In order to provide further guidance to States in the form of a starting list of source categories to

consider in a RACM analysis, we reviewed 2001 national emission inventory information for the more than 200 counties comprising $PM_{2.5}$ nonattainment areas. We have identified the detailed stationary, mobile, and area source categories that are major contributors to total emissions of $PM_{2.5}$ and its precursors in these counties.[85] Based on our review of this emission inventory data and air quality monitoring data from the speciation trends network, we recognize that a wide variety of source categories contribute to $PM_{2.5}$ concentrations in nonattainment areas across the country. We have also reviewed a wide variety of information sources to identify available control measures for many of these categories. Based on this analysis, a list of potential RACM measures is included at the end of this section.

Emission reduction measures constituting RACM should be determined on an area-by-area basis. We believe that a State should consider each of the measures listed in this section to determine if each measure is reasonably available in the applicable nonattainment area. However, under current EPA policy we do not presume that each of these measures is reasonably available in each nonattainment area.

We propose that each State use the list of source categories in this section as a starting point for identifying potentially available control strategies for a nonattainment area. States are encouraged and expected to add other potentially available measures to the list based on its knowledge of the particular universe of emissions sources in the area and comments from the general public. We expect that, depending on the potential measure being analyzed, the State's degree of evaluation will vary as appropriate.

Stationary Source Measures

—Stationary diesel engine retrofit, rebuild or replacement, with catalyzed particle filter
—New or upgraded emission control requirements for direct $PM_{2.5}$ emissions at stationary sources (*e.g.*, installation or improved performance of control devices such as a baghouse or electrostatic precipitator; revised opacity standard; improved compliance monitoring methods)
—New or upgraded emission controls for $PM_{2.5}$ precursors at stationary sources (*e.g.*, SO_2 controls such as wet or dry scrubbers, or reduced sulfur content in fuel)
—Energy efficiency measures to reduce fuel consumption and associated pollutant emissions (either from local sources or distant power providers)

Mobile Source Measures

—Onroad diesel engine retrofits for school buses[86] and trucks using EPA-verified technologies
—Nonroad diesel engine retrofit, rebuild or replacement, with catalyzed particle filter[87]
—Diesel idling programs for trucks, locomotive, and other mobile sources[88]
—Transportation control measures (including those listed in section 108(f) of the CAA as well as other TCMs), as well as other transportation demand management and transportation systems management strategies[89]
—Programs to reduce emissions or accelerate retirement of high emitting vehicles, boats, and lawn and garden equipment
—Emissions testing and repair/maintenance programs for onroad vehicles
—Emissions testing and repair/maintenance programs for nonroad heavy-duty vehicles and equipment[90]
—Programs to expand use of clean burning fuels
—Prohibitions on the sale and use of diesel fuel that exceeds a high sulfur content
—Low emissions specifications for equipment or fuel used for large construction contracts, industrial facilities, ship yards, airports, and public or private vehicle fleets
—Opacity or other emissions standards for ''gross-emitting'' diesel equipment or vessels
—Reduce dust from paved and unpaved roads

Area Source Measures

—New open burning regulations and/or measures to improve program effectiveness
—Smoke management programs to minimize emissions from forest and agricultural burning activities
—Programs to reduce emissions from woodstoves and fireplaces
—Controls on emissions from charbroiling or other commercial cooking operations
—Reduced solvent usage or solvent substitution (particularly for organic compounds with 7 carbon atoms or more, such as toluene, xylene, and trimethyl benzene)
—Reduce dust from construction activities and vacant disturbed areas

We request comment on the specific sources and potential control measures recommended for RACM analysis on this list. Commenters supporting the inclusion or exclusion of measures for this list should provide detailed supporting information as part of their comments.

17. What criteria should be met to ensure effective regulations or permits to implement RACT and RACM?

After the State has identified a RACT or RACM measure for a particular nonattainment area, it must then implement that measure through a legally enforceable mechanism (*e.g.*, such as a regulation or a permit provision). The regulation or permit provision should meet four important criteria.

First, the baseline emissions from the source or group of sources and the future year projected emissions should be quantifiable so that the projected emissions reductions from the sources can be attributed to the specific measures being implemented. It is important that the emissions from the source category in question are accurately represented in the baseline inventory so that emissions reductions are properly calculated. In particular, it is especially important to ensure that both the filterable and condensable components of $PM_{2.5}$ are accurately represented in the baseline since traditional Federal and State test methods have not included the condensable component of particulate matter emissions and have not required particle sizing of the filterable component.

Second, the control measures must be enforceable. This means that they must specify clear, unambiguous, and measurable requirements. When feasible, the measurable requirements for larger emitting facilities should include periodic source testing to establish the capability of such facilities to achieve the required emission level. Additionally, to verify the continued performance of the control measure,

[85] ''Emission inventory analysis for 39 $PM_{2.5}$ Nonattainment Areas,'' memo by Richard Damberg to docket OAR–2003–0062.

[86] See Clean School Bus USA program at *http://www.epa.gov/cleanschoolbus/*. See also: ''What You Should Know About Diesel Exhaust and School Bus Idling'', (June 2003, EPA420–F–03–021) at *http://www.epa.gov/otaq/retrofit/documents/f03021.pdf.*

[87] See EPA's voluntary diesel retrofit program web site at *http://www.epa.gov/otaq/retrofit/overfleetowner.htm.*

[88] See EPA's voluntary diesel retrofit program web site at *http://www.epa.gov/otaq/retrofit/idling.htm.*

[89] See EPA's website on transportation control measures at *http://www.epa.gov/otaq/transp/traqtcms.htm.*

[90] See EPA's web site on nonroad engines, equipment, and vehicles at *http://www.epa.gov/otaq/nonroad.htm.*

specific monitoring programs appropriate for the type of control measure employed and the level of emissions must be included to verify the continued performance of the control measure. The control measures and monitoring program must also have been adopted according to proper legal procedures.

Third, the measures should be replicable. This means that where a rule contains procedures for interpreting, changing, or determining compliance with the rule, the procedures are sufficiently specific and nonsubjective so that two independent entities applying the procedures would obtain the same result.

Fourth, the control measures should be accountable. This means, for example, that source-specific emission limits should be permanent and must reflect the assumptions used in the SIP demonstration. It also means that the SIP must contain a mechanism (such as a title V operating permit) to track emission changes at sources and provide for corrective action if emissions reductions are not achieved according to the plan.

J. What guidance is available to States and Tribes for implementing innovative programs to address the $PM_{2.5}$ problem?

EPA recognizes that, in order to address their fine particle problems, States, Tribes, and local agencies may need to approach certain categories of contributing emissions sources in non-traditional and innovative ways. EPA has developed several guidance documents on innovative programs and policies that may be useful to States and Tribes in developing implementation plans for attaining the $PM_{2.5}$ standards, and these are available at *http://www.epa.gov/ttn/airinnovations/policy.html.*

Many of these guidance documents and policies provide information on approaches that could be used for achieving reductions in emissions of $PM_{2.5}$ and its precursors. In 2001, EPA released guidance on the development and implementation of nontraditional measures. This guidance, entitled ''Improving Air Quality with Economic Incentive Programs,'' provides factors to use to select the right emissions control program, as well as guidance on writing nontraditional regulations that can be approved into a SIP.

EPA has also developed policy documents that provide guidance on attaining credit in SIPs for voluntary measures which reduce emissions from stationary sources [91] and from mobile sources.[92] Current SIP policy requires that, in order for an emission reduction measure to be approved, the emissions reductions must be quantifiable, surplus to other program requirements, enforceable, and permanent. These ''voluntary measures'' policies address situations in which reductions will be achieved despite the lack of any directly enforceable requirement on the sources of emissions. Under these policies, the State would receive credit toward its SIP obligations, and it would be responsible for assuring that the emissions reductions credited in the SIP actually occur. The State would make an enforceable commitment to monitor, assess and report on the emissions reductions resulting from the voluntary measures, and to remedy any shortfalls from forecasted emissions reductions in a timely manner. An example of stationary source measures that could be considered under this policy are no-burn days for wood stoves, voluntary woodstove change-out programs, or energy conservation programs. Examples of voluntary mobile source measures include ozone action plans, reduced switchboard locomotive idling, and trip reduction strategies.

The emerging and voluntary measures policy also addresses situations where quantification of projected emissions reductions from certain measures may be difficult to assess. The policy enables a State to receive provisional credit for implementing hard-to-quantify measures and sets forth procedures by which the State should evaluate program effectiveness.

Request for Comment on the Integrated Local Emission Reduction Program Concept. While significant environmental gains will be achieved through the Title IV SO_2 Acid Rain Program, the NO_X SIP Call Program, the Mobile Source Control Program, and future implementation of the Clean Air Interstate Rule (CAIR), they are not designed to solve every nonattainment problem. Residual nonattainment areas will continue to exist after implementation of these programs, and EPA believes that it may be useful to provide incentives that would stimulate innovative programs to focus additional emission reduction efforts designed to help bring these remaining nonattainment areas into attainment.

In particular, it may be useful to provide real incentives for the emissions-generating community to help design additional approaches on their own initiative that could achieve further environmental benefits outside of the sources and emissions subject to these rules.

EPA is interested in ideas that could create a system which satisfies regional reduction obligations through targeted reduction strategies for designated nonattainment areas. These ideas and incentives could be designed and administered by individual States, or groups of States to be incorporated as part of their State and local attainment planning process for developing SIPs. We believe that, for any such program to be successful, it would need to balance accountability and flexibility, as well as respond to the needs and concerns of air pollution control agencies and regulated sources.

To support the concept of the ILERP, EPA solicits comment on the development and application of factors or criteria for the States and the emissions-generating community that would take into account the unique needs of specific nonattainment areas. We also seek comment on approaches that would provide incentives for improved monitoring and characterization of emissions, *e.g.*, using different factors based on the technical rigor and reliability of emissions verification methods.

Potential mechanisms could range from basic financial incentives to more aggressive and innovative approaches. In its simplest form, the emissions-generating community could choose to complement or expand existing control measures, or perhaps fund new ones. Under the latter approach, a specific value could be applied to a ton of local emissions to be reduced depending on one or more specific criteria such as: The accuracy and technical validity of emissions monitoring used to characterize emissions or demonstrate compliance, seasonal timing or location of the reductions, population exposure, or other considerations.

For example, reducing $PM_{2.5}$ from a sector in a nonattainment area might receive a greater value than reductions from a sector that is upwind of the nonattainment area most of the year, due to the relative effectiveness of the measures at reducing population exposure and monitoring of $PM_{2.5}$.

[91] ''Incorporating Emerging and Voluntary Measures in a State Implementation Plan,'' EPA Office of Air Quality Planning and Standards, Air Quality Strategies and Standards Division, Research Triangle Park, NC, September 2004. For further information, see: *http://www.epa.gov/ttn/oarpg/t1/memoranda/evm_ievm_g.pdf.*

[92] ''Guidance on Incorporating Voluntary Mobile Source Emission Reduction Programs in State Implementation Plans (SIPs),'' memorandum from Richard D. Wilson, Acting Assistant Administrator for Air and Radiation, to EPA Regional Administrators, October 24, 1997. For further information, see *http://www.epa.gov/otaq/transp/vmweb/vmpoldoc.htm.*

Another example could be one in which the emissions-generating facility receives an incentive in exchange for reductions in other pollutants causing $PM_{2.5}$, based on using technically appropriate air quality models to demonstrate superior environmental results.

We seek comment, consistent with the philosophy of State implementation planning, on various approaches that could incorporate these ideas to allow the States to implement such a program that would result in greater emissions reductions and greater environmental results beyond the reductions achieved by the aforementioned existing programs.

K. What aspects of transportation conformity and the $PM_{2.5}$ standard are addressed in this proposal?

1. What is transportation conformity?

Transportation conformity is required under section 176(c) of the CAA (42 U.S.C. 7506(c)) to ensure that federally supported highway and transit project activities are consistent with (''conform to'') the purpose of a SIP. Conformity to the purpose of the SIP means that transportation activities will not cause new air quality violations, worsen existing violations, or delay timely attainment of the NAAQS. Transportation conformity applies in nonattainment areas and maintenance areas. The EPA's transportation conformity rule, 40 CFR part 93, establishes the criteria and procedures for determining whether transportation activities conform to the State air quality plan. It also establishes criteria and procedures for determining whether transportation activities conform in areas where no SIP containing mobile source emissions budgets yet exists.

EPA first published the transportation conformity rule on November 24, 1993 (58 FR 62188) and has amended the rule several times. On August 15, 1997, a comprehensive set of amendments was published that clarified and streamlined language from the 1993 transportation conformity rule (62 FR 43780). On July 1, 2004 the rule was amended to address conformity requirements in 8-hour ozone and $PM_{2.5}$ nonattainment and maintenance areas (69 FR 40004). The July 1, 2004 final rule also incorporated revisions related to a March 1999 court decision and further clarified and streamlined language in the previous version of the rule. On May 6, 2005, EPA finalized a rule on requirements for addressing $PM_{2.5}$ precursors in transportation conformity determinations (70 FR 24280). These rulemakings, as well as other relevant conformity materials such as guidance documents, policy memoranda, the complete text of the conformity rule, and conformity research can be found at EPA's transportation conformity Web site, at *http://www.epa.gov/otaq/transp.htm* (once at the site, click on ''Transportation Conformity.'')

2. Why does transportation conformity apply to $PM_{2.5}$?

Transportation conformity will apply to $PM_{2.5}$ because EPA has evidence to indicate that motor vehicle emissions are significant contributors to the air quality problem in most, if not all, $PM_{2.5}$ nonattainment areas. Gasoline and diesel vehicles emit fine particulate matter as well as $PM_{2.5}$ precursors such as volatile organic compounds (VOCs), NO_X, sulfur oxides (SO_2) and ammonia (NH_3). Travel on paved and unpaved roads results in re-entrained road dust which may contribute to measured $PM_{2.5}$ violations. Also, in some areas transportation-related construction activities may also result in the creation of significant amounts of dust.

3. Why is EPA discussing transportation conformity in this proposal?

We are not proposing changes to the transportation conformity rule in today's proposal. Instead, we are discussing transportation conformity in this notice in order to provide affected parties with information on when transportation conformity will be implemented under the $PM_{2.5}$ standard. Affected parties may include State and local transportation and air quality agencies, metropolitan planning organizations (MPOs) and the U.S. Department of Transportation (DOT). To determine whether this discussion affects your organization, you should carefully examine the applicability requirements in 40 CFR 93.102 of the transportation conformity rule.

4. What revisions have been made to the transportation conformity rule to address the $PM_{2.5}$ standard?

The July 1, 2004, transportation conformity rule revisions contain a number of provisions that apply to $PM_{2.5}$ nonattainment and maintenance areas. For example, the July 1, 2004, rule contains requirements for: regional conformity tests in $PM_{2.5}$ areas; considering direct emissions of $PM_{2.5}$ (*i.e.*, exhaust, brake and tire wear and re-entrained dust) in regional emissions analyses; considering re-entrained road dust and construction-related fugitive dust in regional emissions analyses and compliance with $PM_{2.5}$ SIP control measures.

In addition to the July 1, 2004 rule, EPA published a final rule on May 6, 2005 (70 FR 24280) that established requirements for addressing $PM_{2.5}$ precursors in regional emissions analyses. EPA also published a supplemental notice of proposed rulemaking [93] requesting comment on a number of options for consideration of localized emissions impacts of individual transportation projects in $PM_{2.5}$ nonattainment and maintenance areas. We intend to finalize requirements for localized emissions analyses in $PM_{2.5}$ nonattainment and maintenance areas as expeditiously as possible.

5. Does EPA plan to revoke the PM_{10} standard?

No, we are not planning to revoke the PM_{10} standards at this time. We are in the process of reviewing the PM NAAQS, and as part of that process we are considering whether the current scientific literature would support the establishment of coarse particle standards. (Coarse particles are those which have an aerodynamic diameter between 2.5 and 10 micrometers.)

6. Will some areas be demonstrating conformity for both PM_{10} and $PM_{2.5}$ at the same time?

Yes, since the PM_{10} standard is being retained, a small number of areas will be required to determine conformity to both air quality standards. PM_{10} nonattainment and maintenance areas should continue to make PM_{10} conformity determinations according to the conformity regulation. By the end of the one-year grace period, conformity of metropolitan plans and transportation improvement programs (TIPs) must be determined, reflecting the metropolitan area and any associated donut areas (defined below).

7. When does transportation conformity apply to $PM_{2.5}$ nonattainment areas?

Transportation conformity applies to $PM_{2.5}$ nonattainment areas one year after the effective date of an area's designation. This one-year grace period is found in the CAA at 42 U.S.C. 7506(c)(6). Specifically, this section of the CAA provides areas, when they are first designated nonattainment for a given air quality standard, with a one-year grace period before the conformity regulation applies with respect to that standard. Since the $PM_{2.5}$ standard is a different standard from the PM_{10} standard, every area that is designated nonattainment for the $PM_{2.5}$ standard will have a one-year grace period before

[93] 69 FR 72140 (December 13, 2004).

conformity applies for the $PM_{2.5}$ standard, regardless of whether conformity applies in the area for the PM_{10} standard.

For more information, please see the proposed and final rulemaking entitled, ''Transportation Conformity Rule Amendments: Minor Revision of 18-Month Requirement for Initial SIP Submissions and Addition of Grace Period for Newly Designated Nonattainment Areas,'' published October 5, 2001, (66 FR 50954), and August 6, 2002, (67 FR 50808), respectively for additional discussion of the one-year grace period for newly designated areas. (The proposed and final rule can be found on EPA's transportation conformity website mentioned above.)

8. How does the 1-year grace period apply in metropolitan areas?

A one-year grace period for implementation of the conformity program applies in metropolitan areas that have an established metropolitan planning organization (MPO) that is responsible for transportation planning per 23 U.S.C. 134. In these areas, the one-year grace period means that, one year after the effective date of an area's designation as nonattainment for the $PM_{2.5}$ standard, the area must have a conforming transportation plan and transportation improvement program (TIP) [94] in place to fund or approve transportation projects. (For the discussion of which projects can proceed after the end of the grace period if a conformity determination has not been made by the MPO and U.S. DOT, please see the July 1, 2004 final rule (69 FR 40037), DOT's January 2, 2002, guidance, published February 7, 2002, at 67 FR 5882; and EPA's May 14, 1999, conformity guidance. All of these documents can be found on EPA's transportation conformity Web site.)

9. How does the 1-year grace period apply in ''donut'' areas?

For the purposes of conformity, a donut area is the geographic area outside a metropolitan planning area boundary, but inside the boundary of a designated nonattainment/maintenance area. The conformity requirements for donut areas are generally the same as those for metropolitan areas, and the MPO would include any projects occurring in the donut area in its analysis of the metropolitan transportation plan and TIP. A donut area is not an isolated rural area for the purposes of the conformity process. Therefore, the one-year grace period applies to donut areas in much the same way that it applies to metropolitan areas. That is, within one year of the effective date of an area's designation, a donut area's projects must be included in an MPO's conformity determination for the metropolitan plan and TIP for those projects to be funded or approved. If, at the conclusion of the one-year grace period, the donut area's projects have not been included in the MPO's conformity determination, new ''nonexempt'' projects and project phases could not be approved in the metropolitan area or the donut area.

10. How does the 1-year grace period apply in isolated rural areas?

For the purposes of conformity, isolated rural nonattainment and maintenance areas are areas that do not contain or are not part of any metropolitan planning area designated under the transportation planning regulations. Isolated rural areas do not have federally required metropolitan transportation plans or TIPs and do not have projects that are part of the emissions analysis of any MPO's transportation plan or TIP. Isolated rural areas are distinguished from ''donut'' areas which are geographic areas outside a metropolitan planning area boundary, but inside the boundary of a nonattainment or CAA section 175A maintenance plan area that is dominated by a metropolitan area(s).

Because isolated rural areas do not have federally required metropolitan transportation plans and TIPs, a conformity determination need only be done in an isolated rural area when that area has a transportation project or projects that need approval. Therefore, isolated rural areas also have a one-year grace period before conformity applies under the $PM_{2.5}$ standard, but at the end of that grace period, the area does not have to have made a conformity determination. An isolated rural area would be required to do conformity only at the point when a new transportation project needs approval. This point may occur significantly after the one-year grace period has ended. (Conformity requirements for isolated rural areas can be found at 40 CFR 93.109(g).)

L. What requirements for general conformity should apply to the $PM_{2.5}$ standards?

1. What is the purpose of the general conformity regulations?

Section 176(c) of the CAA requires that before a Federal entity takes an action, it must make a determination that the proposed action will not interfere with the SIP or the State's ability to attain and maintain the NAAQS. In November 1993, EPA promulgated two sets of regulations to implement section 176(c). One set, known as the Transportation Conformity Regulations (described above) deals with approval and funding of highway and mass transit project. The other set, known as the general conformity regulations, deals with all other Federal activities. Besides ensuring that Federal actions will not interfere with the SIP, the general conformity program also fosters communications with State/local air quality agencies, allows for public participation in the review of air quality impacts from Federal actions, and allows for air quality review of individual projects. In 1995, Congress limited the application of section 176(c) to nonattainment and maintenance areas only.

2. How is the general conformity program currently structured?

Due to the very broad definition of ''Federal action'' in the statute and the number of Federal agencies subject to the conformity requirement, the number of individual conformity decisions could have been on the order of a thousand or more per day. To avoid creating an unreasonable administrative burden, EPA established *de minimis* emissions levels and exempted certain actions. In addition, the regulations allow Federal agencies to develop their own list of actions which are presumed to conform. For non-exempt actions that increase emissions above the *de minimis* levels, the Federal agency must demonstrate that the action will conform with the SIP or will not cause or contribute to any new violation of any standard in any area; interfere with provisions in the applicable SIP for maintenance of any standard; increase the frequency or severity of any existing violation of any standard; or delay timely attainment of any standard or any required interim emissions reductions or other milestone. We are currently reviewing the general conformity program and, in a separate action, may revise the regulations as appropriate, with respect to the $PM_{2.5}$ standards.

[94] When used only in this section on transportation conformity, the acronym ''TIP'' refers to ''transportation improvement program.'' In all other sections of this preamble, the acronym ''TIP'' stands for ''tribal implementation plan.''

3. Who runs the general conformity program?

Each Federal agency is responsible for determining if the action it takes is subject to the conformity regulations and, if so, whether the action conforms to the SIP. Each Federal agency's approach to the conformity evaluation differs depending upon the actions being taken. Agencies that permit or fund actions subject to the conformity rules generally require the applicant to develop the technical support for the conformity determination, although some agencies undertake the complete evaluation themselves.

4. How does an agency demonstrate conformity?

Depending upon the pollutant and the specific situation, Federal agencies have several options for demonstrating conformity. For actions in $PM_{2.5}$ nonattainment and maintenance areas, the Federal agency can demonstrate that the project/action is specifically identified and accounted for in the SIP, obtain documentation from the State that the emissions are included in the SIP, have the State commit to include the emissions in the SIP, or mitigate the emissions or offset the emissions from emissions reductions within the same nonattainment or maintenance area.

5. General Conformity Regulation Revisions for the $PM_{2.5}$ Standards

a. What *de minimis* emission levels will be set for pollutants that contribute to $PM_{2.5}$ concentrations?

As discussed in the technical overview section, the key pollutants contributing to $PM_{2.5}$ concentrations in the atmosphere are direct $PM_{2.5}$ emissions, SO_2, NO_X, VOC, and ammonia. Section II.E. proposes policy options for addressing each of these precursors under the $PM_{2.5}$ implementation program. After consideration of public comment, EPA will finalize precursor requirements for the $PM_{2.5}$ implementation program. When finalized, these precursor requirements will also apply under the general conformity program.

In another rulemaking action, we will propose to establish *de minimis* emission levels for federal projects or actions covered by the general conformity program. It is expected that the proposed levels will be identical to the nonattainment area major source levels for the NSR program. Under this approach, $PM_{2.5}$ nonattainment areas would have *de minimis* emission levels for general conformity purposes of 100 tons per year for all $PM_{2.5}$ pollutants. These levels are also consistent with the levels proposed for VOC and NO_X emissions in subpart 1 areas under the 8-hour ozone implementation strategy.[95]

b. What impact will the implementation of the $PM_{2.5}$ standards have on a State's general conformity SIP?

Since we are not now proposing to make specific revisions to the general conformity regulations in this proposal, States should not need to revise their general conformity SIPs, unless they need to do so to ensure the regulations apply in the appropriate areas.

c. Are there any other impacts on the SIPs related to general conformity based on implementation of the $PM_{2.5}$ standards?

Currently, we are developing a revision to the general conformity regulations through a separate rulemaking action, but we are not proposing any general conformity revisions in today's action. However, as areas develop SIPs for the $PM_{2.5}$ standards, we recommend that State and local air quality agencies work with major facilities which are subject to the general conformity regulations (e.g., commercial airports and large military bases) to establish an emission budget for each facility in order to facilitate future conformity determinations. Such a budget could be used by Federal agencies in determining conformity or identifying mitigation measures.

6. Is there a 1-year grace period which applies to general conformity determinations for the purposes of the $PM_{2.5}$ standards?

Yes, the 1-year grace period for implementation of conformity requirements after area designations are completed applies to both transportation and general conformity.[96] Therefore, the general conformity requirements would not apply to federal actions or projects in newly designated nonattainment areas until 1 year after the effective date of the $PM_{2.5}$ area designation. The effective date of the $PM_{2.5}$ designations was April 2005. Thus, general conformity requirements would apply in April 2006. As discussed earlier, the $PM_{2.5}$ standards are new and the grace period applies to all the areas designated nonattainment for that standard. The general conformity regulations specify requirements for actions/projects in areas without an approved SIP. Those requirements would apply to $PM_{2.5}$ nonattainment areas until the SIP is approved by EPA.

M. How will the NSR program address $PM_{2.5}$ and its precursors?

1. Background

The existing regulations require both major and minor New Source Review (NSR) programs to address any pollutant for which there is a national ambient air quality standard (NAAQS) and any precursors to the formation of that pollutant when identified for regulation by the Administrator. We are proposing to amend the NSR regulations to clarify how States, local agencies and Tribes must implement NSR for the $PM_{2.5}$ standard. This proposal also explains how the existing rules will be implemented with respect to $PM_{2.5}$ during the State Implementation Plan (SIP) development period.

The NSR program is a preconstruction permitting program that applies when a source is constructed or modified. The NSR program is composed of three different programs:

- Prevention of Significant Deterioration (PSD);
- Nonattainment NSR (NA NSR); and,
- Minor NSR.

We often refer to the PSD and Nonattainment NSR program as the major NSR program because these programs regulate only major sources.[97]

The PSD program applies when a major source, that is located in an area that is designated as attainment or unclassifiable for any criteria pollutant, is constructed or undergoes a major modification.[98] The NA NSR program applies when a major source that is located in an area that is designated as nonattainment for any criteria pollutant is constructed or undergoes a major modification. The minor NSR program addresses both major and minor sources that undertake construction or modification activities that do not qualify as major, and it applies regardless of the designation of the area in which a source is located.

The national regulations that apply to each of these programs are located in the Code of Federal Regulations (CFR) as shown below:

[95] See 68 FR 32843.

[96] See section 42 U.S.C. 7506(c)(6).

[97] The Act uses the terms ''major emitting facility'' to refer to sources subject to the PSD program, and ''major stationary source'' to refer to sources subject to Nonattainment NSR. CAA Sections 169 and 302(j). For ease of reference, we use the term ''major source'' to refer to both terms.

[98] In addition, the PSD program applies to most noncriteria regulated pollutants.

	Applicable regulations
PSD	40 CFR 52.21, 40 CFR 51.166, 40 CFR 51.165(b).
NA NSR	40 CFR 52.24, 40 CFR 51.165, 40 CFR Part 51, Appendix S.
Minor NSR	40 CFR 51.160–164.

The PSD requirements include but are not limited to:

- Installation of Best Available Control Technology (BACT),
- Air quality monitoring and modeling analyses to ensure that a project's emissions will not cause or contribute to a violation of any NAAQS or maximum allowable pollutant increase (PSD increment),
- Notification of Federal Land Manager of nearby Class I areas, and
- Public comment on the permit.

Nonattainment NSR requirements include but are not limited to:

- Installation of Lowest Achievable Emissions Rate (LAER) control technology,
- Offsetting new emissions with creditable emissions reductions,
- Certification that all major sources owned and operated in the State by the same owner are in compliance with all applicable requirements under the Act,
- An alternative siting analysis demonstrating that the benefits of the proposed source significantly outweigh the environmental and social costs imposed as a result of its location, construction, or modification,
- Public comment on the permit.

Minor NSR programs must meet the statutory requirements in Section 110(a)(2)(c) of the Act which requires ''* * *regulation of the modification and construction of any stationary source* * * as necessary to assure that the [NAAQS] are achieved.''

This proposed rule on the implementation of NSR for $PM_{2.5}$ does not supersede existing PM_{10} NSR requirements. EPA is not planning to revoke the original PM_{10} standards at this time. Accordingly, sources are subject to NSR for both PM_{10} and $PM_{2.5}$.

2. What are the principal elements of the proposed major NSR program for $PM_{2.5}$?

The table below summarizes the main elements of the existing major NSR program that EPA is proposing to address for $PM_{2.5}$ as a regulated NSR pollutant. The EPA's proposal for each element, or where appropriate, explanation of implementation under existing regulations, is explained in detail in the referenced sections of this preamble.

Major NSR program element	EPA proposal	Section
PSD Major Source Threshold	100/250 TPY (no change)	IV.M.4.
NA NSR Major Source Threshold	100 TPY (no change)	IV.M.4.
Significant Emissions Rate	$PM_{2.5}$ Direct Emissions—10 TPY; SO_2—40 TPY If other precursors are included:. NO_X—40 TPY (no change). VOC & Ammonia—determined by SIP.	IV.M.5 & 6.
Control technology: BACT and LAER	Applies for $PM_{2.5}$ direct, SO_2 and other precursors, if included.	IV.M.9 & 13.
Air quality impact analysis	Applies for $PM_{2.5}$	IV.M.11.
Preconstruction monitoring	Applies for $PM_{2.5}$. Proposing five options to address.	IV.M.12.
NA NSR Statewide compliance	Applies for $PM_{2.5}$ direct and precursors, if included	IV.M.13.
NA NSR offsets	Applies for $PM_{2.5}$ direct Considering for precursor emissions	IV.M.14.
Interprecursor Offsetting	Allowed with modeling demonstration (no change)	IV.M.14.c.
Transition for PSD	Continues to apply with limited provisions for use of PM_{10} as a surrogate.	IV.M.16.
Transition for NA NSR	Applies at designation through an approved SIP or through 40 CFR part 51, appendix S.	IV.M.17.
Minor NSR	Clarifies that State and local regulatory programs must include $PM_{2.5}$ requirements for minor sources.	IV.M.20.
NSR Transport Option	Flexible implementation for areas granted a transport classification.	IV.M.21.

The proposed provisions of the $PM_{2.5}$ major NSR program will be codified in the regulatory text as revisions to 40 CFR 51.165; 51.166; 52.21; and 40 CFR part 51, Appendix S. We have made two assumptions in developing the proposed regulatory text for this rule.

The first assumption is that the ozone phase II rule will be promulgated prior to the promulgation of this proposed $PM_{2.5}$ rule. Thus, this proposed $PM_{2.5}$ rule includes language related to ozone precursors and offsets that make the format of the ozone rule consistent with the $PM_{2.5}$ language. The ozone provisions contained in the regulatory text set forth below are consistent with what we expect to finalize in the ozone rule, and this $PM_{2.5}$ proposal is not intended to alter the substance of the ozone phase II rule. To the extent there are changes to the ozone phase II regulatory language when promulgated or the ozone rule is not promulgated prior to the final $PM_{2.5}$ rule, we would need to make changes to the proposed regulatory text in this $PM_{2.5}$ rule at promulgation.

The paragraphs in the revisions to appendix S of this proposed $PM_{2.5}$ rule have not been numbered at this time, based on the second assumption that both of the appendix S rule revisions, appendix S changes in the ozone phase II rule (incorporating the 1990 amendments) and the revisions to appendix S (incorporating NSR reform), will be promulgated prior to the final $PM_{2.5}$ rule. Depending on the status of these appendix S rule revisions at the time of promulgation of the $PM_{2.5}$ rule, the paragraphs would be numbered accordingly.

3. Should precursors to the formation of ambient concentrations of $PM_{2.5}$ be subject to regulation under NSR?

a. Background

Certain NAAQS pollutants such as ozone and $PM_{2.5}$, are partially or entirely formed by precursors. Precursors are currently regulated under parts C and D of the Act based on either statutory presumptions or a scientific determination that the pollutants must be regulated to achieve attainment. The following table shows precursors that we have identified for regulation under the NSR program because of their ability

to cause or contribute to violations of the ozone NAAQS.

Criteria pollutant	Precursor pollutants
Ozone:	
Nonattainment Areas	Volatile Organic Compounds (VOC) and Nitrogen Oxides (NO_X).
Attainment Areas	VOC [99].

Individual SIPs may identify additional precursors as regulated NSR pollutants.

Scientific research has shown that various pollutants can contribute to ambient $PM_{2.5}$ concentrations, including the following:

- $PM_{2.5}$ (direct emissions)
- SO_2 (as a precursor)
- NO_X (as a precursor)
- VOC (as a precursor)
- Ammonia (as a precursor)

b. Should NSR cover precursor emissions in addition to direct emissions of $PM_{2.5}$?

Contribution of precursors to $PM_{2.5}$ nonattainment. As discussed in Section II, precursors contribute significantly to ambient $PM_{2.5}$ concentrations, producing approximately half of the concentration. In most areas of the country, $PM_{2.5}$ precursor emissions are the major contributors to ambient $PM_{2.5}$ concentrations. However, it is technically difficult to determine impacts of source-specific precursor emissions on ambient air quality levels. The relative contribution to ambient $PM_{2.5}$ concentrations from each of these pollutants varies by area. The relative effect of reducing emissions of these pollutants is also highly variable.

$PM_{2.5}$ precursors already addressed under NSR. Some $PM_{2.5}$ precursors are already subject to major NSR under other NAAQS as shown below:

$PM_{2.5}$ precursor	Existing Program coverage for major NSR applicability.
NO_X	NA NSR for NO_2 and Ozone PSD for NO_2.
SO_2	NA NSR and PSD for SO_2.
VOC	NA NSR and PSD for Ozone.
Ammonia	No coverage for NSR (Some areas regulate ammonia for other air quality purposes.)

The $PM_{2.5}$ NSR program could include some, all or none of these precursors of $PM_{2.5}$.

Legal Authority. As discussed earlier in section II.E. of this preamble, we interpret the Clean Air Act to provide explicit authority for EPA to regulate precursors but also to grant the Administrator discretion to determine how to address precursors for particular regulatory purposes. This reading is based on section 302(g) of the Clean Air Act which defines the term ''air pollutant'' to include ''any precursors to the formation of any air pollutant, to the extent the Administrator has identified such precursor or precursors for the particular purpose for which the term 'air pollutant' is used.'' The Administrator's discretion to determine how to address precursors under specific programs is also supported by the language in sections 182(f) and 189(e) which identifies circumstances where the Administrator may determine that it is not appropriate to regulate certain precursors. We discuss these provisions in more detail in section II.E.

Thus, we interpret section 302(g) of the Act to require that the Administrator consider how to address precursors under the NSR program. The term ''air pollutant'' is incorporated into the NSR provisions for various purposes. Sections 182(f) and 189(e) apply to State implementation plan provisions and control requirements, which include NSR programs.

With regard to PSD, Section 165(a)(3) of the Act states that new or modified major sources must demonstrate that emissions ''will not cause, or contribute to, air pollution in excess of any * * * NAAQS in any air quality control region.'' A source could not reasonably make this demonstration without considering precursors that the Agency has identified for this purpose. Section 165(a)(4) of the Act states that a new or modified source must apply the Best Available Control Technology (BACT) ''for each pollutant subject to regulation under this Act emitted from, or which results from, such facility.'' The phrase ''emitted from, or which results from'' indicates that the statute is not limited to direct emissions, but rather extends to precursors as well.

With regard to nonattainment NSR, Sections 172(c)(4) and 173 require States to demonstrate, among other things, that emissions from new or modified major sources are consistent with the achievement of ''reasonable further progress.'' Reasonable further progress is further defined as reductions of the relevant air pollutant, which is defined in Section 302(g) to include precursors identified by the Agency as subject to regulation for that purpose.

Treatment of Precursors for Purposes of NSR. As discussed in section II.E., where there is a basis to do so, we believe EPA may treat precursors of the same pollutant differently under the same program. In this action, we propose different approaches for addressing the individual precursors to $PM_{2.5}$ under the Act's NSR provisions. Generally, where the scientific data and modeling analyses provide reasonable certainty that the pollutant's emissions from stationary sources are a significant contributor to ambient $PM_{2.5}$ concentrations, we believe that pollutant should be identified as a ''regulated NSR pollutant'' and subject to the $PM_{2.5}$ NSR provisions. Conversely, where the effect of a pollutant's emissions from stationary sources on ambient $PM_{2.5}$ concentrations is subject to substantial uncertainty, such that in some circumstances, the pollutant may not result in formation of $PM_{2.5}$, or control of the pollutant may have no effect or may even aggravate air quality, we generally believe it is unreasonable to establish a nationally-applicable presumption that the pollutant is a regulated NSR pollutant subject to the requirements of NSR for $PM_{2.5}$. We also request comment on whether, despite reasonable scientific certainty associated with the effect of a

[99] We have proposed to amend the PSD regulations to expressly include NO_x as an ozone precursor. 68 FR 32802 (June 2, 2003).

pollutant's emissions from stationary sources on ambient $PM_{2.5}$ concentrations, there are circumstances that would support a finding that the Administrator should not identify the pollutant as a precursor for the purposes of the NSR program even if the pollutant is so identified for other programs.

For the purposes of the NSR program, the EPA proposes the following options for addressing SO_2, NO_X, VOCs, and ammonia as precursors to $PM_{2.5}$, and requests comment on these options. Commenters should provide detailed technical information supporting their comments. Sulfur Dioxide. We are proposing to regulate SO_2 as a precursor to $PM_{2.5}$ for purposes of NSR in all attainment, unclassifiable and nonattainment areas. We believe that the technical discussion and analysis of speciated air quality data described in Section II provide an appropriate basis for requiring States to address SO_2 as a precursor to $PM_{2.5}$ for NSR purposes. The fact that sulfate is a significant contributor (e.g. ranging from 9 percent to 40 percent) to $PM_{2.5}$ nonattainment and other air quality problems in all regions of the country is a critical piece of evidence supporting this approach. Additionally, sulfates are a major contributor to ambient $PM_{2.5}$ concentrations in the Eastern United States, roughly equaling the concentration of carbonaceous particles.

EPA does not believe that regulating SO_2 as a precursor to $PM_{2.5}$ is likely to add a major burden to sources as SO_2 is already regulated in these programs as part of the NSR program for the SO_2 NAAQS. The EPA requests comments on this approach to regulate SO_2 as a precursor to $PM_{2.5}$ and a ''regulated NSR pollutant'' for purposes of NSR in all attainment, unclassifiable and nonattainment areas. Nitrogen Oxides. We are proposing to regulate NO_X as a precursor to $PM_{2.5}$ for the NSR program. Under this approach, a State or EPA would presume that NO_X is a significant contributor to an area's ambient $PM_{2.5}$ concentration. This presumption is warranted based on the well-known transformation of NO_X into nitrates, as discussed in more detail in Section II. Nitrates are a significant component of $PM_{2.5}$ mass in northern regions, such as the Midwest and East Coast, and are a main contributor to urban $PM_{2.5}$ mass in California (35–40 percent). However, as described in Section II, nitrate concentrations vary significantly in other regions of the country.

Thus, a State could exempt NO_X from its $PM_{2.5}$ NSR program in a specific area by demonstrating to the Administrator's satisfaction that NO_X emissions from stationary sources in that area are not a significant contributor to that area's ambient $PM_{2.5}$ concentrations and the area is not in a State identified by EPA as a source of a $PM_{2.5}$ interstate transport problem. Hence, for such an area, the State would not need to regulate construction and modification of stationary sources that increase emissions of NO_X in that area to assure that these emissions do not interfere with reasonable further progress or the ability of that area to attain or maintain the $PM_{2.5}$ NAAQS. Otherwise, this option would make NO_X a precursor for the PSD, NA NSR and minor source programs for $PM_{2.5}$. EPA does not believe that this is likely to add a major burden to sources as NO_X is already a regulated NSR pollutant. This is because NO_X is an identified precursor for the ozone NAAQS and an indicator for the NO_2 NAAQS.

Volatile Organic Compounds. The consideration of VOC for NSR applicability is complicated by the variations in reactions of the different species of VOC in the atmospheric transformation into $PM_{2.5}$. Scientific analysis demonstrates that, while the transformation of VOC into particles is a complex and uncertain process, all VOC potentially play a role in the formation of $PM_{2.5}$. However some specific compounds play a more direct role than others. These transformations are discussed in Section II. In light of the complexity in assessing the role of VOC in $PM_{2.5}$ formation, we are not proposing to regulate VOC as a precursor to $PM_{2.5}$ for the NSR program.

However, if a State demonstrates to the Administrator's satisfaction that VOC emissions from stationary sources in a specific area are a significant contributor to that area's ambient $PM_{2.5}$ concentrations, then the State would regulate VOC (or a subset of VOC) as a $PM_{2.5}$ precursor for the NSR program in that area. Therefore, for such an area, the State would need to regulate construction and modification of stationary sources that increase emissions of VOC in that area to assure that these emissions do not interfere with reasonable further progress or the ability of that area to attain or maintain the $PM_{2.5}$ NAAQS. Under either scenario, as discussed in Section II, we would still regulate high molecular weight VOC (with 25 carbon atoms or more and low vapor pressure) as $PM_{2.5}$ direct emissions because they are emitted directly as primary organic particles and exist primarily in the condensed phase at ambient temperatures.

Ammonia. As discussed in section II.E., in some areas of the country, ammonia plays a significant role in the formation of ambient $PM_{2.5}$ concentrations. In other areas, ammonia plays a less significant role. Our understanding of emissions inventories, and the impact that reducing ammonia emissions has on ambient $PM_{2.5}$ concentrations, is evolving. In some cases, undesired consequences may result from reductions of ammonia, such as increased acidity levels for particles and deposition. For these reasons, EPA proposes that ammonia would only be identified as a precursor to $PM_{2.5}$ NAAQS in a nonattainment area for purposes of NSR on a case-by-case basis. If the State demonstrates to the Administrator's satisfaction that ammonia emissions from stationary sources in a specific nonattainment area are a significant contributor to that area's ambient $PM_{2.5}$ concentrations, then the State would regulate ammonia as a $PM_{2.5}$ precursor under the NSR program in that nonattainment area. Therefore the State would need to regulate construction and modification of stationary sources that increase emissions of ammonia in that area to assure that these emissions do not interfere with reasonable further progress or the ability of that area to attain or maintain the $PM_{2.5}$ NAAQS. However, in other nonattainment areas, we would not require States to include ammonia in their NSR programs. We are not proposing to identify ammonia as a regulated NSR pollutant for purposes of PSD in any attainment or unclassifiable areas.

The EPA requests comments on this approach for addressing ammonia emissions under the NSR programs.

4. What is a major stationary source (major source) under the major NSR program for $PM_{2.5}$?

a. Background

The major NSR program applies to construction of major stationary sources and major modifications at major stationary sources. A stationary source is a ''major source'' if its actual emissions or its potential to emit for a specific pollutant equals or exceeds the major source threshold for that pollutant established in the CAA. Different pollutants are not summed to determine applicability.

b. Proposed Option

Sections 169 and 302(j) of the Act contain definitions of ''major emitting facility'' and ''major stationary source'' that apply to programs implemented under part C and subpart 1 of part D of the Act. Accordingly, we are proposing to follow these definitions for purposes of defining a major emitting facility or

major stationary source that would be subject to major NSR based on direct $PM_{2.5}$ emissions or emissions of pollutants identified as $PM_{2.5}$ precursors for the NSR program. This approach is also consistent with how we treat other criteria pollutants that are covered by subpart 1 of part D of the Clean Air Act and thus are not subject to a tiered classification system such as the one required for ozone nonattainment areas under subpart 2 of the Clean Air Act. EPA does not interpret subpart 4 of part D of the Act (creating ''serious'' and ''moderate'' classifications for PM_{10} nonattainment areas) to apply to $PM_{2.5}$.

This means the major source thresholds would be:

PSD	100 tpy for source categories listed in 40 CFR 51.166(b)(1)(i)(a) and 52.21(b)(1)(i)(a).
	250 tpy for all other source categories.
NA NSR ..	100 tpy for all source categories.

Thus, no regulatory change would be required. See §§ 51.165(a)(1)(iv)(a); 51.166(b)(1)(i); 52.21(b)(1)(i); Appendix S, Section II.A.4.

We request comment on this approach for establishing the major source threshold for purposes of the major NSR program for the $PM_{2.5}$ NAAQS. We also request comment on whether the definitions in Section 169 and 302(j) are controlling for purposes of establishing the definition of major stationary source for the $PM_{2.5}$ NAAQS, which is being implemented under part C and subpart 1 of part D of the Act.

c. What is the effect of this proposed option?

Although our proposed approach is consistent with Sections 169 and 302(j) and Subpart 1 of part D of the Act, this approach results in a higher major source threshold in $PM_{2.5}$ nonattainment areas than the major source threshold that applies in some PM_{10} nonattainment areas under Subpart 4 of part D of the Act. This is because Section 189(b) of the Act establishes a 70 tpy major source threshold for ''serious'' PM_{10} nonattainment areas while ''moderate'' PM_{10} nonattainment areas apply a 100 tpy major source threshold based on the definition in section 302(j). We do not believe the Act gives us the discretion to promulgate a lower major source threshold for pollutants such as $PM_{2.5}$ that are only subject to Subpart 1 of part D of the Act.

Nevertheless, we do not believe this situation will adversely impact attainment of the $PM_{2.5}$ NAAQS. Data from EPA's emissions inventory indicate that a significant number of sources have actual $PM_{2.5}$ emissions in the 100 to 250 tpy range. Additionally, the more current inventory data shows that the number of sources that would be covered as major sources by a lower major source threshold would not increase substantially unless the threshold were lowered to 20 tpy or below. Thus, even if EPA had the discretion to adopt a 70 tpy major source threshold for $PM_{2.5}$ nonattainment areas, we do not believe that many additional sources would be subject to the major NSR program in $PM_{2.5}$ nonattainment areas.

States should consider this information in developing their own SIP-approved NSR programs. For example, if construction of $PM_{2.5}$ sources emitting 99 tpy with no major NSR controls and without mitigation would undermine a State's ability to achieve reasonable further progress or attain the $PM_{2.5}$ NAAQS, then the State should consider imposing emissions controls or other requirements on these sources through the State's minor NSR program.

5. What should the significant emissions rate be for direct emissions of $PM_{2.5}$?

a. Background

The determination of what should be classified as a modification subject to major NSR is based, in part, on a significant emissions rate.[100] The NSR regulations define this term as a rate above which a net emissions increase will trigger major NSR permitting requirements if such increase results from a major modification. Sources are exempt from major NSR requirements if an emissions increase resulting from a modification is below this rate because EPA considers such lower emissions increase to be de minimis for purposes of the NSR program. The significant emissions rates for criteria pollutants are given below:

Criteria pollutant	Significant emissions rate (tpy)
Ozone	VOC: Any increase—40 tpy (dependent on NA classification).
	NO_X: Any increase—40 tpy (dependent on NA classification).
NO_2	NO_X: 40 tpy.
PM_{10}	15 tpy.
CO	100 tpy.
SO_2	40 tpy.
Lead	.6 tpy.

[100] For additional background on EPA's interpretation of modification and rationale for including significant emissions rates in defining major modifications, see 61 FR 38253–54 (Dec. 31, 2002).

The significant emissions rates listed in the above table apply to the direct and precursor pollutants listed in the table in section III.M.3.a. Significant emissions rates for additional pollutants that are subject to the PSD program are contained in the following provisions of our regulations:

- 40 CFR 51.166(b)(23) and
- 40 CFR 52.21(b)(23)

The EPA performed some preliminary modeling analyses to determine an appropriate significant emissions rate for direct emissions of $PM_{2.5}$. Several typical stack heights (ranging from 5 to 200 meters in height) were modeled using meteorological data from Pittsburgh and Oklahoma City. Modelers ran ISCST (Industrial Source Complex Short Term model) to assess the impact of emissions increases on ambient $PM_{2.5}$ concentrations. EPA ran models for a variety of source types with varying meteorology, release heights, building shapes, and receptor locations.

The modeling produced the following results that we considered further in developing the options below:

- Shorter stacks had much more impact in the local area than taller stacks.
- Increases of about 5 tons per year from facilities with short stacks were shown to cause a measurable increase in ambient $PM_{2.5}$ concentrations.
- Emissions increases from tall stacks, 100 meters or greater, were associated with a small increase in ambient $PM_{2.5}$ concentrations in the immediate area.

b. Proposed Options

Preferred option 1: For direct emissions of $PM_{2.5}$, EPA is proposing to define the significant emissions rate as 10 tons per year. This proposal is based fundamentally on the same approach as we used in setting the significant emissions rate for total suspended particulate matter (TSP) and PM_{10}.

Historically, the significant emissions rate for TSP (equal or exceeding 25 tons per year) was set by analyzing the source size that would be unlikely to cause impacts above 4 percent of the standard (4 percent of 260 $\mu g/m^3$ or 10.4 $\mu g/m^3$ as a 24-hour average). Although a range of source configurations can yield a wide range of impacts per ton per year of emissions, EPA reviewed typical configurations of major TSP sources and concluded that a major modification that increased emissions by 25 tons per year or more would be unlikely to increase 24-hour average TSP concentrations by more than 10.4 $\mu g/m^3$.

When EPA set the significant emissions rate for PM_{10}, we first determined the ratio between the

controlling standards for PM_{10} and TSP, *i.e.* (150 μg/m³)/(260 μg/m³) or about 3/5. Both of these standards are based on a year's second highest 24-hour average concentration. The EPA then set the PM_{10} significant emissions rate at about 3/5 of 25 tons per year, which (with rounding) is 15 tons per year. This reflects the fact that a source emitting 25 tons of TSP per year that has an impact of 4 percent of the TSP standard would show an impact from 15 tons PM_{10} per year of approximately 4 percent of the PM_{10} standard (*i.e.*, 6 μg/m³).

Conceptually, EPA is proposing a significant emissions rate for $PM_{2.5}$ based on the same approach. However, the comparison of the $PM_{2.5}$ standard with earlier particulate matter standards is complicated by the difference in the averaging times of the controlling standards, which are 24-hour average values for TSP and PM_{10} but an annual average value for $PM_{2.5}$. Because the annual standard is the generally controlling standard for lowering both short-term and long-term ambient $PM_{2.5}$ concentrations (62 FR at 38669), EPA proposes using the annual standard to determine the significant emissions rate.

We conducted additional modeling using the ISC3 model to compare annual average and 24-hour average impacts of a fixed emissions rate for a variety of source configurations. Several typical stack heights (ranging from 5 to 200 meters in height) were modeled using meteorological data from Pittsburgh and Oklahoma City and both with and without downwash from different building types.

Our analysis of these modeling results shows that a major modification that increases direct $PM_{2.5}$ emissions by less than 10 tons per year would be unlikely to increase annual average ambient $PM_{2.5}$ concentrations by more than 4 percent of the annual $PM_{2.5}$ standard. This finding relies on EPA's comparison of annual average versus 24-hour average concentrations. As noted above, EPA previously concluded that a source that increases PM_{10} emissions by 15 tons per year would likely cause an increase in the 24-hour average PM_{10} concentration by 6 μg/m³ or less. Based on the ratios between annual and 24-hour average concentrations found in EPA's recent modeling, a source having that impact would typically increase annual average PM_{10} concentrations by about 0.8 μg/m³ or less. The EPA is using a target $PM_{2.5}$ impact of 4 percent of the annual $PM_{2.5}$ standard or 0.6 μg/m³. This target impact is (0.6 μg/m³)/(0.8 μg/m³) or 3/4 of the potential impact of a 15 ton per year emissions increase. This suggests a significant emissions rate of 3/4 of 15 tons per year. By rounding the result, we determined that an emissions increase below 10 tons per year increase in direct $PM_{2.5}$ emissions would be unlikely to increase ambient $PM_{2.5}$ concentrations by more than 4 percent of the annual $PM_{2.5}$ standard.

Option 2: The EPA recognizes that a range of source configurations can have a range of impacts, that the $PM_{2.5}$ source population differs in some respects from the TSP and PM_{10} source population and that the acceptable stationary source impact on ambient $PM_{2.5}$ concentrations may warrant being defined differently from the acceptable impact for TSP or PM_{10}. The EPA specifically solicits comments on a range of potential thresholds ranging from 5 to 15 tons per year for the significant emissions rate for $PM_{2.5}$ direct emissions. The upper bound is a set rate of 15 tons per year because that is the significant emissions rate for PM_{10}. The lower bound is a set rate of 5 tons per year because our modeling indicates that an increase in ambient $PM_{2.5}$ concentrations above the target de minimis impact level can occur where facilities with short stacks have $PM_{2.5}$ emissions increases of about 5 tons per year.

We solicit comments on the proposed significant emissions rate level and on any other approaches for determining this value.

6. What should be the significant emissions rates for $PM_{2.5}$ precursors?

a. Background

It is difficult to determine the ambient air quality effects that result from a single source of emissions of $PM_{2.5}$ precursors. There are conservative screening models for predicting impacts of large NO_X and SO_2 sources on ambient $PM_{2.5}$ concentrations. We conducted a range of modeling analyses to determine the amount of $PM_{2.5}$ precursor emissions needed to show an increase in ambient $PM_{2.5}$ concentrations. These analyses showed that precursor emissions probably have some localized impacts, but that most impact is farther downwind as precursors have the time to convert to $PM_{2.5}$. In addition, the modeling available at this time does not provide sufficient information to estimate impacts of single source emissions of ammonia and VOC on ambient $PM_{2.5}$ concentrations.

Although we have not finally determined which pollutants (if any) will be regulated as $PM_{2.5}$ precursors under the NSR program, we are proposing significant emissions rates in the event that the precursors under consideration are identified as such for the major NSR program. In the event that EPA adopts an ''opt-in'' approach—that is, the presumption that a precursor is not subject to NSR unless a State demonstrates to the Administrator's satisfaction that it should be included—the State opting in would be required to adopt the significant emissions rate for the precursor as set forth below, in the absence of demonstrating that another significant emissions rate is more appropriate.

b. Proposed Options

Preferred Option 1: The EPA proposes the use of existing significant emissions rates for those pollutants already included in major NSR programs as shown below:

Pollutant	Significant emissions rate (equal or exceeding)
NO_X	40 tpy.
SO_2	40 tpy.
VOC	40 tpy.

The use of existing significant emission rates where the $PM_{2.5}$ precursor is also regulated under NSR for a separate criteria pollutant harmonizes the NSR program for $PM_{2.5}$ with the NSR programs for those other criteria pollutants. This enables a source to determine the NSR impacts of proposed modifications by reference to a single significant emissions rate for each pollutant, and enables streamlining of determinations regarding the applicable control technology and analysis of air quality impacts into a single and comprehensive decision making process for both $PM_{2.5}$ and other criteria pollutants that also cover $PM_{2.5}$ precursors. This also follows precedent. When ozone became a criteria pollutant EPA used the NO_X significant emissions rate from the NO_2 program.

EPA has never set a significant emissions rate for ammonia to determine major NSR applicability. A necessary component of our approach to NSR applicability for ammonia is that those States who determine in their SIPs that control of ammonia is necessary will set the significant emissions rate for ammonia based on the information presented in each attainment demonstration.

Option 2: Set the precursor levels at the same level as the significant emission rate for $PM_{2.5}$ direct emissions, that is, 10 TPY. This would make more modifications subject to $PM_{2.5}$ permitting requirements and therefore could provide more protection to the environment. This does not, however, follow the precedent in the ozone NSR program. Having several different significant emissions rates for the same

pollutant would add additional complexity to an already complex program without necessarily providing additional environmental benefits.

We request comment on the options listed above and on any other approaches for establishing precursor significant emissions rates.

7. What is the role of condensible emissions in determining major NSR applicability?

Condensible emissions commonly make up a significant component of $PM_{2.5}$ emissions. As discussed in Sections IV.I. and IV.P, certain sources utilizing high temperature processes emit gaseous pollutants into the ambient air which rapidly condense into particle form. The constituents of these condensed particles include, but are not limited to, organic material, sulfuric acid, nitrates, and metals.

The EPA has issued guidance clarifying that PM_{10} includes condensible particles and that, where condensible particles are expected to be significant, States should use methods that measure condensible emissions.[101] States are already required under the consolidated emissions reporting rule to report condensible emissions in each inventory revision (see 67 FR 39602, June 10, 2001), and Method 202 in Appendix M of 40 CFR part 51 quantifies condensible particulate matter.

However, because of the flexibility incorporated into EPA's approach to the issue and the inconsistent implementation of the existing guidance, there have been some misconceptions as to whether condensible emissions must be included in a source's PM_{10} emissions under the PM_{10} standard in determining NSR applicability. The rules at 40 CFR 51.100 define ''PM emissions'' and ''PM_{10} emissions'' by reference to the PM measured by applicable reference methods, an equivalent or alternative method specified in part 51, or by a test method specified in an approved SIP. See 40 CFR 51.100(pp), (rr), and § 52.01 (incorporating § 51.100 definitions by default). As discussed in Section III.P., different test methods measure condensible emissions with varying levels of accuracy. In addition, sources often project their emissions increases from new construction and modifications based on emissions factors, such as AP–42 factors, that in some cases have not accounted for condensible emissions. Sources have used other methods to project their PM emissions that do not account for condensible emissions (e.g., projecting PM_{10} impacts based on an analysis of existing TSP limits without adding condensible emissions).

We are proposing to clarify in this rule that condensible emissions must be included when determining whether a source is subject to the major NSR program. The inclusion of condensible emissions in a source's $PM_{2.5}$ emissions is of increasing importance with the change in the indicator for particulate matter to $PM_{2.5}$. Condensible emissions are essentially fine particles, and thus are a larger fraction of $PM_{2.5}$ emissions than of TSP or PM_{10} emissions. Condensible emissions commonly make up a significant component of $PM_{2.5}$ emissions, and the failure to include them may result in adverse consequences to the environment.

While EPA has always included condensible emissions in its definition of particulate matter emissions, insofar as these emissions are measured by applicable test methods or included in emissions factors, we believe that the greater significance of condensible emissions in addressing $PM_{2.5}$ warrants greater emphasis on including these emissions in implementing the major NSR program. A key aspect of this issue is the development of the new test method discussed in Section III.P., which quantifies and can be used to characterize the constituents of $PM_{2.5}$ emissions, including both the filterable and condensible portion of the emissions stream.

8. What are the requirements of the Prevention of Significant Deterioration (PSD) program for attainment areas?

Background. Sources subject to PSD must:

- Install Best Available Control Technology (BACT),
- Conduct air quality modeling analyses to ensure that the project's emissions will not cause or contribute to:
- A violation of any NAAQS or maximum allowable pollutant increase (PSD increment),
- Any impact on any Class I area air quality related value, and
- As required, perform preconstruction monitoring.

Each of these elements is discussed below.

9. How should BACT be implemented?

We are not proposing any change to our current policy for implementing BACT requirements at a major source that is subject to the requirements of the PSD program. Accordingly, if a physical or operational change at the source will result in a significant emissions increase and a significant net emissions increase of a regulated NSR pollutant, then the major source must apply BACT (for that pollutant) to the emissions unit(s) that will be physically or operationally changed as a part of that project. Under the $PM_{2.5}$ major NSR program, BACT will be required at an emissions unit if a physical or operational change at the unit causes a significant emissions increase and significant net emissions increase of $PM_{2.5}$ direct emissions, or a $PM_{2.5}$ precursor, if applicable at the major stationary source.

10. What is EPA's plan for preventing significant deterioration of air quality for $PM_{2.5}$?

Background. The PSD provisions of the CAA limit the degradation of ambient air concentrations of certain pollutants. The CAA does not dictate the mechanism to achieve this result for pollutants other than PM_{10} and SO_2. One mechanism involves a system of ''increments'' and area classifications that define significant deterioration for individual pollutants. The PSD increments are the maximum allowable increase in ambient air concentrations above a baseline concentration for a criteria pollutant. The current increments are:

Pollutant/averaging time	Class I	Class II	Class III
PM_{10}			
Annual average	4 μg/m³	17 μg/m³	34 μg/m³
8-Hour average	8 μg/m³	30 μg/m³	60 μg/m³
SO_2			
Annual average	2 μg/m³	20 μg/m³	40 μg/m³
24-hour average	5 μg/m³	91 μg/m³	182 μg/m³
3 Hour Average	25 μg/m³	512 μg/m³	700 μg/m³

[101] Memo. from Thompson G. Pace, Acting Chief, Particulate Matter Programs Branch, to Sean Fitzsimmons, Iowa Department of Natural Resources, (Mar. 31, 1994) (copy avaiable at *http://www.epa.gov/Region7/programs/artd/air/nsr.nsrmemos/cpm.pdf*).

Pollutant/averaging time	Class I	Class II	Class III
NO_2—Annual Average	2.5 μg/m³	25 μg/m³	50 μg/m³

We are in the process of developing an approach for preventing significant deterioration of air quality which may include $PM_{2.5}$ increments. The EPA has placed this action on a separate administrative track due to the additional time necessary to fully develop any potential proposal. In the interim period, States must continue to implement the PM_{10} increments in 40 CFR 51.166, 52.21 and/or their SIPs, as applicable.

11. How will the air quality analysis required under section 165(a)(3) be implemented?

Scope of the Requirement. All sources subject to PSD review must perform an ambient air quality impact analysis to show that the emissions from the source do not cause or contribute to a PSD increment or NAAQS violation. See CAA Section 165(a)(3); 40 CFR 51.166(k), 52.21(k). Accordingly, sources will be required to perform this analysis for the $PM_{2.5}$ NAAQS. Such analyses would consider how a source impacts air quality at existing $PM_{2.5}$ monitor locations as well as at other locations which are appropriate to allow the comparison of predicted $PM_{2.5}$ concentrations to the NAAQS, based on $PM_{2.5}$ monitor siting requirements and recommendations.

Sources also will remain under an obligation to perform the air quality impact analysis for the PM_{10} increments and the PM_{10} NAAQS.

Plan for Development of Significant Impact Levels for $PM_{2.5}$. The Agency has had a practice of exempting sources from the cumulative air quality impact analyses where their level of contribution is below a significant impact level (SIL). If the maximum ambient impacts from the proposed project are less than a SIL, the source

- Is presumed to not cause or significantly contribute to a PSD increment or NAAQS violation, and
- Is not required to perform multiple source cumulative impact assessments.

The EPA has long interpreted the ''significant contribution'' test set forth in § 51.165(b)(2) to apply to the PSD program since the provision applies to major new sources and major modifications located in attainment and unclassifiable areas. We have proposed codifying this exemption in the PSD regulations in a separate **Federal Register** notice. See 61 FR 38249, 38293 (July 23, 1996). This exemption is based on the de minimis nature of the source's contribution.

The SIL (in μg/m³) have been established for other criteria pollutants with PSD increments and are given below:

Criteria pollutant	Averaging time	Class I SIL μg/m³ (proposed 7/23/96, not promulgated)	Class II and III SIL μg/m³
SO_2	3 hour	1.0	25.0
	24-hour	.2	5.0
	Annual	.1	1.0
CO	1 hour	N/A	2000
	8 hours	N/A	500
NO_2	Annual	.1	1.0
PM_{10}	24-hour	.3	5.0
	Annual	.2	1.0

Because the SIL benefits the NSR permitting program by exempting sources with *de minimis* impacts from the cumulative air quality analysis, EPA is considering establishing $PM_{2.5}$ SIL for emissions of $PM_{2.5}$ direct. This would enable sources with impacts below the SIL to avoid the cumulative air quality impact analysis with respect to their potential contribution to a $PM_{2.5}$ NAAQS violation, and create a *de minimis* ''cause or contribute'' definition for violations. Direct $PM_{2.5}$ emissions can be evaluated with current models. Therefore, the development of SIL for impact evaluations of direct $PM_{2.5}$ emissions is technically achievable. The EPA is soliciting comments on this question and on methods for the development of $PM_{2.5}$ SIL.

The limited capabilities of existing models make it difficult to establish and implement SIL for $PM_{2.5}$ precursors. Current models are only able to accurately address individual source impacts associated with direct $PM_{2.5}$ emissions and, to a lesser degree, SO_2 and NO_X. They can not accurately predict single source impacts on ambient $PM_{2.5}$ concentrations from other precursors. Without including formation of $PM_{2.5}$ from precursor emissions, the complete impact cannot be assessed.

EPA solicits comments and ideas on the direction to take and possible approaches to setting $PM_{2.5}$ SIL for direct and precursor emissions. The EPA intends to use these comments in developing SIL on a separate administrative track.

12. How should the PSD pre-construction monitoring requirement be implemented for $PM_{2.5}$?

EPA solicits comment on what preconstruction monitoring requirements should be required by the $PM_{2.5}$ PSD program.

a. Background

Sources subject to PSD are subject to pre-construction ambient air quality monitoring requirements. See Sections 165(a)(7) and 165(e) of the CAA and 40 CFR 51.166(m), § 52.21(m). The PSD permitting requirements currently provide that continuous pre-construction ambient air quality monitoring must be conducted for any criteria pollutant emitted in significant amounts. Under 40 CFR 51.166(i)(5), and 40 CFR 52.21(i)(5) the reviewing authority has the discretion to exempt an applicant from this monitoring requirement if:

- The maximum modeled concentration for the applicable averaging period caused by the proposed significant emissions increase (or net emissions increase) is less than

the prescribed significant monitoring concentration (SMC); or

• The existing monitored ambient concentrations are less than the prescribed SMC. The following are the SMC for criteria pollutants:

Pollutants	Ambient concentration ($\mu g/m^3$)	Averaging period
CO	575	8 hours.
NO_2	14	Annual.
SO_2	13	24 hours.
PM_{10}	10	24 hours.

A source may also use existing data as a surrogate for pre-construction monitoring if the existing monitored data record is determined to be representative of the project's location. For information on representative monitoring see ''Ambient Monitoring Guideline for Prevention of Significant Deterioration (PSD),'' EPA–450/4–87–007. Under the current regulatory approach, the need for pre-construction monitoring by an applicant depends on the spatial and temporal coverage of the current monitoring program. The expected gradients of concentration between existing monitors also need to be considered in deciding whether there is a need for pre-construction ambient monitoring.

The $PM_{2.5}$ ambient monitoring data are used in the PSD program to:

• Establish current $PM_{2.5}$ NAAQS compliance status in the project's impact area;

• Determine a representative background ambient $PM_{2.5}$ concentration which will be included with modeled estimates to assess NAAQS compliance.

The $PM_{2.5}$ ambient monitoring measurements include particulate matter from $PM_{2.5}$ direct emissions and those formed by $PM_{2.5}$ precursors. If required of a particular source, pre-construction monitoring could add one year to the permitting process and increase the cost of the permit. Such a requirement could have the effect of delaying or preventing sources from undertaking environmentally beneficial projects. Accordingly, today, we are reconsidering our current approach for satisfying the pre-construction monitoring requirements for the purposes of the $PM_{2.5}$ standard. While we are proposing to retain the current approach, we are also soliciting comments on innovative options that could provide better solutions for satisfying the preconstruction monitoring requirements.

b. Options for PSD Preconstruction Monitoring

Preferred Option 1: Require preconstruction monitoring for all major sources of $PM_{2.5}$ direct and the precursors identified as regulated NSR pollutants for $PM_{2.5}$, but on a case-by-case basis allow sources to satisfy this requirement by demonstrating the existing $PM_{2.5}$ network is sufficient. This option will provide information on effects of new construction on the $PM_{2.5}$ NAAQS and increments. This option would not require a change to the preconstruction monitoring regulations. Concerns about this option include:

• It is challenging to find an appropriate location for any monitor because $PM_{2.5}$ direct emissions typically affect nearby locations while precursor emissions affect areas farther away.

• The existing monitors can either measure total $PM_{2.5}$ mass or can provide data on the mass of different $PM_{2.5}$ components. The latter type, a speciation monitor, is more expensive to operate but provides useful information on the contribution of sources of precursor and $PM_{2.5}$ direct emissions.

In cases where ambient $PM_{2.5}$ concentration gradients between existing monitors are small with little likelihood of local site-specific ''hot spots,'' interpolation between existing monitored values may be appropriate for determining that the existing $PM_{2.5}$ monitoring network is sufficient. We request comment on this approach.

Option 2: Exempt all $PM_{2.5}$ sources from doing monitoring by determining the existing $PM_{2.5}$ network is sufficient.

The use of the acquired $PM_{2.5}$ monitored data record in place of applicant performed pre-construction monitoring would follow the current trend in PSD permitting activities. This procedure would have the advantage of reducing the time required for permit preparation and reduce the costs of the permit application. If ambient $PM_{2.5}$ concentration gradients between monitoring stations are small there may be little need for additional monitoring data. The need to make discretionary decisions on whether to perform pre-construction monitoring would be eliminated.

However, EPA favors the continued use of the case-by-case determination as to the need to perform ambient $PM_{2.5}$ pre-construction monitoring because of the following limitations to using the existing $PM_{2.5}$ monitoring data record:

• The $PM_{2.5}$ monitoring data record would require spatial interpolation between monitors for the determination of appropriate concentrations at the project's location.

• Use of existing monitored data will not increase the $PM_{2.5}$ monitoring data record to confirm or contradict conventional perceptions.

• The $PM_{2.5}$ monitoring data record assumes that local hot spots of high $PM_{2.5}$ concentrations do not exist or are already being monitored, which may not be true in all cases.

• Automatic acceptance of existing measurements does not follow EPA's current policy that a case-by-case determination needs to be made to determine whether pre-construction ambient monitoring is necessary.

• When used with the impact modeling, separate concentrations of direct and precursor formed particulate matter is needed.

Because of these limitations, existing $PM_{2.5}$ monitoring data must be reviewed for applicability and representativeness before being judged appropriate for use in lieu of project acquired ambient data. The current $PM_{2.5}$ network may not be sufficient for all applicants. The EPA is soliciting comments and suggestions on this issue.

Option 3: Use Significant Monitoring Concentrations (SMC) to exempt sources from pre-construction monitoring requirements. The reviewing authority has the discretion to exempt an applicant from the pre-construction monitoring requirement if the modeled impacts from the proposed source are less than the prescribed SMC.

Similar to the significant impact levels used in modeled impact analysis, the PSD process will become simpler through the use of SMC. It provides a definitive means for applicants with little impact to opt out of the resource intensive, costly, and time consuming pre-construction ambient air quality monitoring requirement. Therefore, it is an important component of the PSD program.

The form of the SMC will be defined by the form of the impact modeling. SMC must be developed for direct $PM_{2.5}$ emissions if the impact modeling only addresses direct emissions of $PM_{2.5}$. This may require different direct and precursor SMC.

Because of the advantages SMC provide to the NSR permitting program, EPA is considering the development of $PM_{2.5}$ SMC. The EPA is soliciting comments on the development and use of $PM_{2.5}$ SMC in the PSD program. This option could be used in combination with the other options described.

Option 4: Use of the available large PM_{10} data record, combined with the recent $PM_{2.5}$ acquired ambient measurements, may provide a monitoring data base that is sufficiently distributed to provide representative

ambient measurements for most applicants. This would alleviate the need for pre-construction monitoring and make the PSD program less burdensome. This would also provide an interim means to estimate ambient $PM_{2.5}$ concentrations until more extensive monitoring data record can be developed.

However, the differences in characteristics between $PM_{2.5}$ and PM_{10}, and our limited understanding of their relationships, presents a problem.

- PM_{10} conversion factors may not sufficiently reflect important industry specific and spatially related characteristics of $PM_{2.5}$.
- Removing the obligation to provide pre-construction ambient monitoring data would eliminate industry's contribution to the ambient $PM_{2.5}$ data record.

This may not be a viable substitute to satisfy the need to provide representative $PM_{2.5}$ ambient measurements. The EPA requests comments on these options on pre-construction monitoring.

Option 5: Existing § 52.21(i)(5)(ii) and § 51.166(i)(5)(iii) could be interpreted to allow a reviewing authority to exempt an applicant from pre-construction monitoring for any pollutant for which we have not established a SMC. These provisions state that a source may be exempted from preconstruction monitoring ''if * * * the pollutant is not listed in'' the list of pollutants for which SMC have been set.[102] The original rationale for this exemption is based on the lack of adequate methods for measuring ambient concentrations of pollutants not on the list. 45 FR at 52709, 52723–52724. We request comment on this interpretation and any other legal or policy rationale that could support applying the text of these provisions to exempt sources from preconstruction monitoring if we do not define a SMC for $PM_{2.5}$.

13. Nonattainment New Source Review (NA NSR) Requirements

Background. Sources subject to NA NSR must:

- Install Lowest Achievable Emissions Rate (LAER) control technology;
- Offset new emissions with creditable emissions reductions.
- Certify that all sources owned and operated by the same owner within the State are in compliance; and,
- Conduct an alternative siting analysis demonstrating that the benefits of the proposed source significantly outweigh the environmental and social costs.

14. What are the offset requirements for NA NSR?

Background. Under Section 173 of the Act, all major sources and major modifications at existing sources within a nonattainment area must obtain emissions reductions to offset any emissions increases resulting from the project in an amount that is at least equal to the emissions increase, and that is consistent with reasonable further progress towards attainment. In addition, these offsets must be:

- From the same nonattainment area or a different nonattainment area that impacts the area where the source is located (as long as the other area has the same or higher classification);
- Federally enforceable; and
- Affect air quality in the area where the emissions increases from the new major source or modification are occurring.

We refer to the proportional difference between the amount of the required offsets to the amount of emissions increase as the ''offset ratio.'' The offset ratios for the other criteria pollutants are:

Pollutant	Offset ratio
Ozone	At least 1:1 to 1.5:1 depending on ozone nonattainment classification.
PM_{10}	At least 1:1.
NO_X	At least 1:1.
SO_2	At least 1:1.
Lead	At least 1:1.
CO	At least 1:1.

a. What is the required offset ratio for $PM_{2.5}$ direct emissions?

The Act specifies an offset ratio for several situations. In ozone nonattainment areas subject to subpart 2, the ratio is set between 1.1:1 and 1.5:1 depending on the area's level of classification pursuant to subpart 2 of the Act. For other nonattainment areas, the Act establishes a minimum offset ratio of 1:1 pursuant to Subpart 1 of the Act. Since the $PM_{2.5}$ program is being implemented under subpart 1, the applicable ratio is at least 1:1 on a mass basis. We request comment on establishing a required offset ratio of at least 1:1, and on any other option for establishing the required offset ratio for $PM_{2.5}$ direct emissions.

b. Which precursors shall be subject to the offset requirement?

If we identify a precursor as a regulated NSR pollutant in our final action, then that pollutant will be subject to the offset requirement. Accordingly, consistent with our preferred approach for identifying SO_2 as a national precursor and NO_X as a presumptive national precursor, we propose that SO_2 and NO_X would be subject to the offset requirement. VOCs and ammonia would be subject to the offset requirement if we designated these pollutants as $PM_{2.5}$ precursors for the purposes of major NSR. If we adopt an approach under which the precursors are presumptively excluded from major NSR unless and until a State NA NSR program specifically includes such a pollutant, then the precursor would not be subject to the offset requirement until such time.

c. What is the required offset ratio for $PM_{2.5}$ precursors?

The Act requires that a source obtain offsets for emissions increases that occur in a nonattainment area. As with $PM_{2.5}$ direct emissions, the minimum offset ratio permitted under the Act would be at least 1:1. We believe this ratio should apply where a source seeks to offset an increase in emissions of a $PM_{2.5}$ precursor with creditable reductions of the same precursor. We request comment on requiring an offset ratio of at least 1:1 for any precursor identified by the Administrator as a regulated NSR pollutant for $PM_{2.5}$ nonattainment areas. We also request comment on whether this mandatory offset ratio should apply to any other precursor identified by a State for regulation through its SIP-approved nonattainment major NSR program, or whether the State should have the option to establish a different offset ratio for such pollutant.

d. Should EPA allow interprecursor trading to comply with the offset requirement?

Because several different pollutants contribute to ambient $PM_{2.5}$ concentrations, we are proposing to allow flexibility in how major sources may satisfy the offset requirement. Specifically, we are proposing to allow increases in emissions of direct $PM_{2.5}$ to be offset by a decrease in $PM_{2.5}$ precursor emissions; and we are proposing to allow an increase in a $PM_{2.5}$ precursor to be offset by a decrease in emissions of a different $PM_{2.5}$ precursor or with $PM_{2.5}$ direct

[102] These sections actually cross-reference the list at § 51.166(i)(8)(i) and 52.21(i)(8)(i), however we renumbered those sections to subsection (i)(5)(i) of those provisions in December 2002 and inadvertently overlooked correcting the cross-references in subsections (i)(5)(ii) and (i)(5)(iii). See 67 FR 80186. It is apparent from the rule as originally promulgated in 1980 that subsection (i)(5)(i) is now the correct cross-reference. See 45 FR 52676, 52739 (Aug. 7, 1980). We propose to correct this misnumbering and others in this section when we finalize today's proposal.

emissions. However, such trades would only be permissible if the State shows that the trade is beneficial in reducing overall ambient concentrations of $PM_{2.5}$, and the Administrator approves of the trade.

This additional flexibility might make it difficult to ensure that the ambient air concentration of $PM_{2.5}$ continues to decrease. It may also be administratively difficult to manage. Nonetheless, we are proposing to allow interprecursor trading to generate creditable emissions reductions for use as offsets, because we believe that reductions of a different $PM_{2.5}$ precursor may have an equal or better impact in reducing ambient $PM_{2.5}$ concentrations if an appropriate offset ratio is determined. Additionally, interprecursor trading may provide a reliable source of offset emissions in areas where availability may otherwise be limited.

There are several ways in which interprecursor trading for offsets could be implemented. Under one approach, a State would develop its own interprecursor trading rule for inclusion in its SIP, based on a modeling demonstration for a specific nonattainment area. The EPA would review a State interprecursor trading rule during the SIP approval process. Once approved, the State could follow this approach on all future NSR permits issued. Another approach would be to review individual trades as part of the major NSR permitting process. The EPA and the public would have an opportunity to comment on whether the modeling or other technical evidence presented by a particular State is sufficient to support interprecursor offsets for that specific permit application. Under either approach, a State could not allow interprecursor trading without EPA approval. The EPA is requesting comment on whether, States should be required to demonstrate the adequacy of offset ratio(s) using modeling as part of a State rule, in demonstrations for specific nonattainment areas, and/or on a permit-by-permit basis, and/or on some other basis. While EPA believes that such interprecursor trading flexibility is more appropriate for offsets which are statutorily required, we are seeking comment on whether this flexibility should also apply to netting analysis for a source.

15. What are the implementation and transition issues associated with this rule?

Implementation. Implementation of NSR for $PM_{2.5}$ is dependent on:

- Who implements the program and
- What regulations are used to implement NSR.

The components of the NSR programs are implemented by the following:

- PSD: States or EPA
- Nonattainment NSR: State or EPA
- Minor NSR: States only
- NSR in Indian country: Tribes or EPA

Transition. The requirements applicable to NSR SIPs for and the obligation to subject sources to NSR permitting for $PM_{2.5}$ direct and precursor emissions are codified in the existing federal regulations, and can be implemented without specific regulatory changes. The existing regulations require NSR for any NAAQS pollutant for which an area is designated attainment or nonattainment. See 40 CFR 51.160(b); 51.165(a)(2)(i); 51.166(a)(7); 52.21(a)(2); 52.24(k); 40 CFR part 51, Appendix S, Section IV. A. Thus, the obligation to implement PSD for the NAAQS was triggered upon the effective date of the NAAQS, as explained in prior guidance.[103] (In that guidance, EPA also explained that PSD permitting for PM_{10} would be accepted as a surrogate approach for this obligation, as discussed in more detail below.) For nonattainment areas, permits must comply with the nonattainment NSR requirements for $PM_{2.5}$, either in a State's approved part D program or, where that is lacking, as set forth in 40 CFR part 51, Appendix S, pursuant to § 52.24(k). To clarify how these requirements are to be implemented for $PM_{2.5}$, we are proposing to add provisions to:

- 40 CFR 51.166—implementation plan requirements for major new or modified sources in attainment or unclassifiable areas;
- 40 CFR 51.165—implementation plan requirements for addressing major new or modified sources in nonattainment areas and sources located in attainment or unclassifiable areas that would impact a nonattainment area;
- 40 CFR 52.21—the federal implementation plan for areas lacking an approved SIP or TIP program to regulate construction or modification of major stationary sources in an attainment or unclassifiable area.
- 40 CFR part 51, Appendix S—provisions for issuing permits before a State has an approved implementation plan regulating construction or modification of major stationary sources.

[103] See ''Interim Implementation for New Source Review Requirements for $PM_{2.5}$,'' J. Seitz, EPA (Oct. 23, 1997).

16. Implementation of PSD provisions during the SIP Development period

a. Background

On October 23, 1997, we issued a guidance document entitled ''Interim Implementation for the New Source Review Requirements for $PM_{2.5}$,'' John Seitz, EPA. As noted in that guidance, Section 165 of the Act suggests that PSD requirements become effective for a new NAAQS upon the effective date of the NAAQS. Section 165(a)(1) of the Act provides that no new or modified major source may be constructed without a PSD permit that meets all of the Section 165(a) requirements with respect to the regulated pollutant. Moreover, Section 165(a)(3) provides that the emissions from any such source may not cause or contribute to a violation of any NAAQS. Also, Section 165(a)(4) requires BACT for each pollutant subject to PSD regulation. The 1997 guidance stated that sources would be allowed to use implementation of a PM_{10} program as a surrogate for meeting $PM_{2.5}$ NSR requirements until certain difficulties were resolved, primarily the lack of necessary tools to calculate the emissions of $PM_{2.5}$ and related precursors, the lack of adequate modeling techniques to project ambient impacts, and the lack of $PM_{2.5}$ monitoring sites. As discussed in this preamble, those difficulties have been resolved in most respects, and where they have not been, the proposal contains appropriate provisions to account for it. These issues will be finally resolved by the Agency upon promulgation of these proposed revisions. When final, these revisions will take effect immediately on the effective date in States that issue permits under a delegation from EPA. However, States with a SIP-approved PSD program requiring amendments to incorporate these rule changes will need additional time to incorporate the final NSR rule change for $PM_{2.5}$ into their SIPs. For example, a State may need to amend their existing regulations to add the specific significant emissions rate for $PM_{2.5}$ or a designated precursor. We propose to require that States with SIP-approved PSD programs submit revised PSD programs for $PM_{2.5}$ at the same time that they must submit nonattainment NSR programs for $PM_{2.5}$ (April 5, 2008).[104] However, during the SIP-

[104] We note that we requested that States submit certifications that their SIPs were adequate with respect to certain infrastructure elements, including PSD, for the $PM_{2.5}$ NAAQS, by July 2000, consistent with Section 110(a)(1) and (2). See Re-issue of the Early Planning Guidance for the Revised Ozone and Particulate Matter (PM) National Ambient Air

Continued

development period, the $PM_{2.5}$ NAAQS must still be protected under the PSD program in such States.

b. Proposed Options

Upon promulgation of this rule, States that accept delegation would implement the $PM_{2.5}$ program in 40 CFR 52.21 from the effective date of this rule. However, for SIP-approved States, we seek comment on the following options to address implementation of the PSD program from the time this rule is final until EPA approves a State's PSD program for $PM_{2.5}$:

Option 1—Continue Implementing the 1997 Guidance To use PM_{10} Program as a Surrogate for $PM_{2.5}$

We are proposing that if a SIP-approved State is unable to implement a PSD program for the $PM_{2.5}$ NAAQS upon promulgation of these proposed revisions, then the State may continue to implement a PM_{10} program as a surrogate to meet the PSD program requirements for $PM_{2.5}$ pursuant to the 1997 guidance mentioned above. However, to assure that use of PM_{10} is protective of the $PM_{2.5}$ NAAQS, the State must assure that two requirements are met. First, States must require sources to demonstrate that emissions from construction or operation of the facility will not cause or contribute to a violation of the $PM_{2.5}$ NAAQS. We believe that States have the authority to implement this requirement through existing SIP-approved programs. Second, States will be required to include condensible particulate matter emissions in determining major NSR applicability and control requirements. As discussed elsewhere, PM_{10} already includes condensible emissions, but many States have not regulated condensible emissions in implementing the PM_{10} NAAQS because EPA has not consistently implemented its guidance on this issue. Because condensible emissions are essentially fine particles and a larger fraction of $PM_{2.5}$ emissions in comparison to PM_{10}, EPA believes inclusion of condensible emissions during the SIP development period for PSD programs is necessary to ensure that the PM_{10} indicator acts as an adequate surrogate for $PM_{2.5}$.

Quality Standards (NAAQS) (June 16, 1998). In accordance with a Consent Decree in *Environmental Defense and American Lung Ass'n* v. *Johnson*, No. 1:05CV00493 (D.D.C. June 15, 2005), EPA must determine by October 4, 2008 whether each State has submitted SIP revisions for $PM_{2.5}$ required under section 110(a)(2) of the Clean Air Act.

Option 2—Update the 1997 Guidance to Include Proposed Provisions of this Rule or Amend 40 CFR part 51, Appendix S to State That 40 CFR 52.21 Would Apply

Another option would be to update the 1997 guidance to reflect the provisions in this proposed rule and allow States to run a $PM_{2.5}$ program pursuant to this updated guidance. Alternatively, we would amend Appendix S and 40 CFR 52.24 so that the PSD requirements of 40 CFR 52.21 would govern the issuance of major NSR permits during the period between the time we finalize this implementation rule and when we approve changes to the State's PSD program to include $PM_{2.5}$ as a regulated NSR pollutant. This provision would not apply to sources located in Indian Country because they are already directly subject to the requirements of 40 CFR 52.21.

If a State does not believe it has the authority to issue PSD permits consistent with Appendix S, then EPA would issue the permit. We specifically seek comment on whether we should update the 1997 guidance or amend Appendix S to allow States to run a PSD program for $PM_{2.5}$ in attainment areas during the SIP development period.

Option 3—State Requests Delegation of 40 CFR 52.21

A third option would be for EPA to allow a State to request delegation of just the federal $PM_{2.5}$ program (reflected in § 52.21 of our regulations) in that State. A State that otherwise has a SIP-approved PSD program could request delegation for $PM_{2.5}$ by informing EPA that it does not intend to submit a PSD SIP for $PM_{2.5}$ in the immediate future.

After promulgation of a new NAAQS, EPA may allow States up to three years to submit a State implementation plan containing a PSD program for that pollutant. 42 U.S.C. 7410(a). EPA's PSD regulation at § 51.166 gives SIP-approved States up to three years to submit a revision to their PSD program after EPA amends § 51.166. (§ 51.166(a)(6)). Under section 110(c) of the Act, EPA must promulgate a federal implementation plan (FIP) upon finding that a State has failed to make a required plan submission or that a required submission is inadequate.

If a State notifies EPA prior to the close of the customary three-year period that the State does not intend to submit a PSD SIP for $PM_{2.5}$ in the immediate future and requests delegation, we believe EPA could find that the State has failed to submit the requisite PSD SIP for $PM_{2.5}$, promulgate a PSD FIP for $PM_{2.5}$ based on 40 CFR 52.21, and delegate implementation of the federal PSD program to the State. The State would then be able to implement a PSD program for $PM_{2.5}$ in accordance with the terms of section 52.21, as amended in this rulemaking action. However, such a State would still have the option to obtain EPA approval of a PSD SIP for $PM_{2.5}$ if it submitted the SIP revision at a later date.

c. Rationale

We believe option 1 is reasonable for the following reasons. First, PM_{10} will act as an adequate surrogate for $PM_{2.5}$ in most respects, because all new major sources and major modifications that would trigger PSD requirements for $PM_{2.5}$ would also trigger PM_{10} requirements because $PM_{2.5}$ is a subset of PM_{10}. The one situation where this would not be true is where a source emitted significant amounts of condensible emissions that would not otherwise be counted under a State's PM_{10} PSD program. This is the reason EPA would ensure that States include condensible emissions in determining major NSR applicability as a condition of using PM_{10} as a surrogate. Second, both of the precursors proposed for regulation in this preamble—SO_2 and NO_X—are already regulated under State NSR programs for other criteria pollutants. Thus, those precursors will be subject to NSR through those other programs. Third, requiring immediate implementation of the Section 165(a)(3) air quality analysis for the $PM_{2.5}$ NAAQS will adequately cover the remaining gap that results from using PM_{10} as a surrogate for $PM_{2.5}$.

Upon promulgation of these rules, except in SIP-approved States which would be running a PM_{10} program as a surrogate for a $PM_{2.5}$ program as stated in option 1 above, a $PM_{2.5}$ program would apply in attainment areas of delegated States and in nonattainment areas. Hence to avoid this imbalance, we are seeking comment on option 2 which addresses whether there is a need to update the 1997 interim policy to reflect these rules in SIP-approved States or whether we should amend Appendix S to allow these States to run a $PM_{2.5}$ program for PSD based on the requirements of 40 CFR 52.21 during the SIP development period in attainment areas.

Option 3 would also address this imbalance by allowing a State to request delegation of only the PSD program for $PM_{2.5}$ prior to the deadline for submitting a PSD SIP for $PM_{2.5}$. (April 5, 2008 as discussed in the background discussion of section M16.) Because we need to allow a State enough time to submit a PSD SIP for $PM_{2.5}$, we do not

believe we can unilaterally issue a FIP for the PSD $PM_{2.5}$ program right away. However, if a State informs EPA prior to April 5, 2008 that it does not intend to submit a $PM_{2.5}$ SIP, we would then have cause to issue a FIP addressing the PSD program for $PM_{2.5}$ and then delegate that program to the State.

17. Implementation of the Nonattainment NSR Provisions During the SIP Development Period

a. Background

EPA interprets section 172(c)(5) of the Clean Air Act to require that States issue major NSR permits for construction and major modifications of major stationary sources in any nonattainment area. Thus, since the $PM_{2.5}$ nonattainment designations became effective on April 5, 2005, States are now required to issue major NSR permits that address the Section 173, nonattainment major NSR requirements for $PM_{2.5}$. On the date that the $PM_{2.5}$ non-attainment designations took effect (April 5, 2005), we issued a guidance to address implementation of the NA NSR program pending the completion of this action to develop implementation rules for $PM_{2.5}$. See memorandum from Stephen D. Page, Director, Office of Air Quality Planning and Standards to Regional Air Directors, ''Implementation of New Source Review Requirements in $PM_{2.5}$ Nonattainment Areas'' (Apr. 5, 2005).

Our current guidance permits States to implement a PM_{10} nonattainment major NSR program as a surrogate to address the requirements of nonattainment major NSR for the $PM_{2.5}$ NAAQS. A State's surrogate major NSR program in $PM_{2.5}$ nonattainment areas may consist of either the implementation of the State's SIP-approved nonattainment major NSR program for PM_{10} or implementation of a major NSR program for PM_{10} under the authority in 40 CFR part 51, Appendix S. Appendix S generally applies where a State lacks a nonattainment major NSR program covering a particular pollutant.

Once this $PM_{2.5}$ implementation rule is finalized, States will have the necessary tools to implement a major NSR program for $PM_{2.5}$ States will no longer be permitted to implement a nonattainment major NSR program for PM_{10} as a surrogate for the $PM_{2.5}$ nonattainment major NSR program. Most States will then need to implement a transitional $PM_{2.5}$ nonattainment major NSR program under Appendix S (as amended in this rulemaking action) until EPA approves changes to a State's SIP-approved major NSR program to reflect the requirements of this rule.

The NA NSR provisions in a State's existing SIP-approved NA NSR program would only apply in areas designated nonattainment for the $PM_{2.5}$ NAAQS if the SIP-approved regulations contain a generic requirement to issue part D permits in areas designated as nonattainment for any criteria pollutant and do not otherwise need to be amended to incorporate the changes proposed in this rule. In the situations described below, the States will need to revise their NA NSR regulations and submit them to EPA for incorporation into the SIP by the date the new implementation plans for $PM_{2.5}$ are due (April 5, 2008):

- States that have nonattainment regulations that need to be amended to incorporate the new $PM_{2.5}$ requirements.
- States that have newly designated nonattainment areas for $PM_{2.5}$ and nonattainment NSR regulations that specifically list the areas in which NA NSR applies (i.e., the list does not include the newly designated areas).
- States that currently have no nonattainment areas but have newly designated nonattainment areas for $PM_{2.5}$.

States in the categories listed above will have to implement a transitional major NSR permitting program for $PM_{2.5}$ pursuant to 40 CFR 52.24(k) and Appendix S until their existing part D SIPs are revised to meet these new $PM_{2.5}$ NSR regulations.

b. Implementation of NSR Under the Emissions Offset Interpretative Ruling (40 CFR part 51, Appendix S) With Revisions

In general, Appendix S requires new or modified major sources to meet LAER and obtain sufficient offsetting emissions reductions to assure that a new major source or major modification of an existing major source will not interfere with the area's progress toward attainment. Readers should refer to 40 CFR part 51, Appendix S for a complete understanding of these and other existing Appendix S requirements. In this action, we propose to revise Appendix S to include provisions necessary to implement a transitional major NSR program for $PM_{2.5}$, including significant emissions rates applicable to major modifications for $PM_{2.5}$ and, as appropriate, precursors.[105]

As currently written, Appendix S applies directly to major stationary sources. In accordance with the requirements of Section 110(a)(2)(c) of the Act, we believe that the majority of States have the legal authority to issue permits consistent with these requirements under an existing SIP-approved permitting program. Nonetheless, at least one State has reported that it lacks the legal authority to issue permits implementing the requirements of Appendix S under its existing permitting rules. If a State is unable to apply the requirements of Appendix S, EPA will act as the reviewing authority for the relevant portion of the permit.

We believe that it is appropriate for EPA to issue the pre-construction permits in such circumstances. As discussed earlier, Congress amended the Act in 1990 to remove the requirements that would have applied a construction ban in area's that lacked a SIP-approved part D permit program. Thus, we believe that it is consistent with Congressional intent that either the State or EPA issue permits to construct during the interim period.

c. Legal Basis for Requiring States To Issue Nonattainment NSR Permits During the SIP-Development Period

Section 110(a)(2)(C) of the CAA establishes a general duty on States to include a program in their SIP that regulates the modification and construction of any stationary source as necessary to assure that NAAQS are achieved. This general duty exists during all periods, including before a State has an approved NA NSR permit program.

Section 110(a)(2)(c) of the Act does not define specific requirements States must follow for issuing major source permits during the period between nonattainment designation and EPA approval of a nonattainment NSR SIP (the ''SIP-development'' period). However, EPA has historically recognized that the SIP development period provided under Section 172(b) of the CAA leaves a gap in part D major NSR permitting and has determined that this gap is to be filled, in general, with a transitional major NSR program that includes the LAER and offset requirements from part D. 57 FR 18070, 18076 (Apr. 28, 1992). This transitional NSR program has been implemented, to date, through the Emissions Offset Interpretative Ruling at 40 CFR part 51, Appendix S. The EPA's regulations at 40 CFR 52.24(k) require that Appendix S govern permitting during this time.[106]

[105] In a separate **Federal Register** notice, we will be revising Appendix S to incorporate changes that conform Appendix S with the minimum requirements for implementation plans that are set forth in 40 CFR 51.165.

[106] EPA has interpreted this requirement to require States to issue permits that are consistent with the requirements in Appendix S. We believe that many States have the authority to issue permits that are consistent with Appendix S for example,

Continued

In addition, Congress indicated in the 1977 CAA Amendments that major NSR permitting should apply during the SIP development period. See Public Law 95–95, section 129(a), 91 Stat. 685 (1977). Specifically, in 1977, when Congress enacted a moratorium on construction in any area lacking an approved part D SIP, with a delayed effective date of July 1, 1979, Congress directed that Appendix S govern permitting of sources constructing in such areas prior to that date. *Id.* section 108(b), section 129(a).

The EPA subsequently codified the use of Appendix S as the transitional major NSR program in 40 CFR 52.24(k), reasoning (in the context of implementing a delay in the construction ban for then-recently designated nonattainment areas) that Congress had directed that Appendix S remain in effect to protect air quality while State plans were being designed. 45 FR 91604 (Oct. 2, 1980). When Congress removed the construction ban (except as provided in Section 110(n)(3)), it left 40 CFR 52.24(k) in place, implementing the transitional major NSR program under Appendix S.

The continued application of appendix S through § 52.24(k) is also supported by one of the purposes of the Clean Air Act ''to protect and enhance the quality of the Nation's air resources so as to promote the public health and welfare and the productive capacity of its population.'' 42 U.S.C. 7401(b)(1). This provision was the basis for the original judicial finding that the Act imposed an obligation to prevent significant deterioration in areas that meet the NAAQS, prior to Congress' enactment of the PSD program at part C of the Act.[107] This policy of nondegradation applies with even greater force in areas that fail to meet the NAAQS. Thus, we believe that an interim major NSR program for the SIP development period—as codified at appendix S and updated to reflect CAA amendments and the promulgation of the $PM_{2.5}$ NAAQS—is supported by section 110(a)(2)(C), section 101(b)(1), Congressional intent, and our gap-filling authority under section 301(a).

Although EPA omitted § 52.24(k) from the regulatory text accompanying a proposed rulemaking in 1996 (see 61 FR 38250, 38305 (July 23, 1996)), the preamble indicated that the change was intended only to update and clarify the regulation with regard to the changes to the construction ban made by the 1990 Amendments.[108] The proposal did not in any manner indicate that EPA believed that NSR permits complying with Appendix S, or otherwise satisfying Section 110(a)(2)(C), were not required during the interim period. We have discussed the continued applicability of § 52.24(k) and Appendix S in implementation of the 8-hour ozone NAAQS. 68 FR at 32846.

18. NSR Applicability to Precursors During the Interim Period

As discussed in Section M.2, EPA has proposed several options for NSR applicability to the potential $PM_{2.5}$ precursors (SO_2, NO_X, VOC, and ammonia). EPA has proposed that SO_2 is a national precursor to $PM_{2.5}$. EPA has also proposed that if NO_X emissions are subject to NSR as $PM_{2.5}$ precursor, States could exempt NO_X from its $PM_{2.5}$ NSR program in a specific area by demonstrating that NO_X emissions from stationary sources in that area are not a significant contributor to that area's ambient $PM_{2.5}$ concentrations and the area is not in a State identified by EPA as a source of a $PM_{2.5}$ interstate transport problem. However, during the SIP development period, States face substantial hurdles in making such a demonstration because they are in the initial stages of gathering information and analyses necessary to prepare their attainment demonstrations. Thus, during this period, a presumption that a precursor is a regulated NSR pollutant for $PM_{2.5}$ may amount to an irrebuttable presumption for many States. Because of the challenges posed by the SIP development period, EPA is considering whether NSR applicability to precursors should be stayed for one or more precursors during the SIP development period. The EPA is soliciting comments on the applicability of NSR to precursors during the SIP development period.

19. Are there any Tribal concerns?

We expect that some Tribal areas will be designated as nonattainment in part because of pollution that is transported from surrounding State lands. Tribal representatives have advocated for additional flexibility to address nonattainment problems caused by transported pollution, such as the provision of NSR offset set-asides (which we expect would come from State offset pools or banks), because they have limited ability to generate offsets on their own. Tribal representatives have raised these and other concerns in discussions on implementation of the 8-hour ozone and $PM_{2.5}$ standards, and in comments on the 8-hour ozone implementation rule.[109] We request comment on whether emissions offset set-asides, possibly generated by innovative measures to promote additional emissions reductions, are an appropriate method to help level the playing field for the Tribes and support economic development in Tribal areas. We also request comment on ways in which States may help provide the Tribes access to offsets from non-Tribal areas.

In addition, to address these and other issues related to implementation of the NSR program in Indian country, EPA is evaluating the impact of the NSR program on Tribes in Indian country. The EPA plans to address these concerns in a future Tribal NSR rule.

20. What must a State or local agency do about minor sources of $PM_{2.5}$?

Pursuant to Section 110(a)(2)(C), States must have a minor source permitting program. This applies to new and modified stationary sources that are not considered major for a criteria pollutants or a precursor for a criteria pollutant. At this time States must include the following pollutants in their minor NSR program:

- VOC,
- SO_2,
- NO_X,
- CO,
- PM_{10}, and
- Lead (Pb)

States must now amend their minor source programs to include

- $PM_{2.5}$ direct emissions, and
- Precursor emissions as included in $PM_{2.5}$ major NSR.

through State minor NSR permit programs. However, if a State lacks authority to issue a permit, then EPA will issue the permit.

[107] *See Alabama Power Co.* v. *Costle,* 636 F.3d 323, 346–047 (DC Cir. 1980) (discussing *Sierra Club* v. *Ruckelshaus,* 344 F. Supp. 253 (D.D.C. 1972), aff'd per curiam 4 ERC 1815 (DC Cir. 1972), aff'd by an equally divided court, sub nom *Fri* v. *Sierra Club,* 412 U.S. 541 (1973).

[108] The actual language at 40 CFR 52.24(k) arguably allows States to issue permits under Appendix S for a maximum period of 18 months after designation. After this time, if the nonattainment area does not have an approved NA NSR permit program, a construction ban would apply. However, in 1990, Congress altered the provisions of the construction ban such that it would not apply when a State/Local lacked an approved NA NSR permit program in the future. The EPA believes that Congress' removal of the construction ban from the Act supersedes the regulatory language at 52.24(k) and EPA has reinterpreted this language to allow States to issue permits under Appendix S from designation until the SIP is approved even if this exceeds 18 months. See 1991 memo, ''New Source Review (NSR) program Transitional Guidance, John S. Seitz, March 11, 1991. The EPA anticipates revising the language at section 52.24(k) to properly reflect this interpretation.

[109] 109 Letter from Bill Grantham, National Tribal Environmental Council, to docket 2003–0079, providing comments on the proposed 8-hour ozone implementation rule (66 FR 32802).

21. Supplemental Program Option: Rural Transport Areas

a. What flexible implementation options should be available for Transport areas?

EPA is considering flexible implementation for Nonattainment NSR for areas that qualify for the transport classification. These areas are designated nonattainment due to overwhelming transport, for example, areas where pollution is from surrounding jurisdictions but where there are few or no sources of $PM_{2.5}$ in the area. Under the current program no flexibility is available under NA NSR for sources in these areas overwhelmed by transport. As mentioned earlier, in this rule, we are proposing a transport classification to provide some flexibility to address some of the fairness issues associated with transport. This transport classification can be used by States and Tribes if they meet the criteria discussed below. If there is no transport classification then this option will not be available in the near-term. However, EPA intends to develop a separate proposed rule on flexible implementation of nonattainment NSR for areas designated nonattainment for any criteria pollutant, where transport is the primary cause of the area's nonattainment. Such a proposal would not be dependent on the incorporation of a transport classification in a classification system for a NAAQS.

b. Which nonattainment areas would be eligible for the transport program?

In order to be eligible for the transport option the State/Local with jurisdiction over a nonattainment area must:

(1) Have submitted an attainment plan which demonstrates, through modeling, that the area is designated nonattainment due to overwhelming transport from an upwind area(s); and

(2) Have submitted an attainment plan containing any additional local control measures needed for attainment of the $PM_{2.5}$ standard; and

(3) Have submitted the attainment plan that commits the State/Local to implement a program that meets the requirements for transport areas discussed below.

As described earlier in the classification section, an area will not be reclassified as a ''transport'' area until after the SIP is approved by the Regional Office. A transport area could apply for single or multi-state/Local nonattainment areas. Such areas will not be able to implement the nonattainment NSR transport program until the area is reclassified as a ''transport'' area. Until an area is reclassified, States must continue to apply the nonattainment NSR program.

c. What would be the basic requirements of a transport nonattainment NSR program?

EPA is requesting comment on what type of regulatory flexibility would be beneficial for transport areas while providing equal environmental protection. Specific examples of needed flexibility for areas which the commenter suggests would qualify as transport areas would be helpful. As noted above, we anticipate proposing a separate rulemaking on the details of the NSR requirements.

N. How will EPA ensure that the 8-hour ozone standard will be implemented in a way which allows an optimal mix of controls for $PM_{2.5}$, ozone, and regional haze?

1. Could an area's $PM_{2.5}$ strategy affect its 8-hour ozone and/or regional haze strategy?

Based on current data, many areas are violating both the 8-hour ozone and the $PM_{2.5}$ NAAQS. Thus, many cities will have ozone and $PM_{2.5}$ nonattainment areas with overlapping boundaries. Requirements for regional haze apply to all areas. Each State is responsible for developing SIP revisions to meet all the requirements relevant to each nonattainment area for each pollutant as well as developing a regional haze plan. In some cases, ozone control measures may also be useful for a $PM_{2.5}$ control strategy or a regional haze plan. Similarly, controls for $PM_{2.5}$ may lead to reductions in ozone or regional haze. For example, considered in isolation, a metropolitan area's ozone strategy might be based on additional VOC emissions reductions; if the area needs NO_X reductions for $PM_{2.5}$ attainment, however, an optimal approach might include a more complex ozone strategy using both NO_X and VOC reductions. We believe integration of ozone and $PM_{2.5}$ attainment planning will reduce overall costs of meeting multiple air quality goals.

Many of the factors affecting concentrations of ozone also affect concentrations of $PM_{2.5}$. Emissions of NO_X and/or VOC will lead to formation of organic particles and the precursors of particulate nitrate, as well as ozone. The presence of ozone is an important factor affecting $PM_{2.5}$ formation; as ozone builds up, so do hydroxyl (OH^-) radicals which are instrumental in oxidizing gas phase SO_2 to sulfuric acid. The sulfuric acid may be converted to sulfate particles, increasing the $PM_{2.5}$ concentration. Further, the local ozone concentrations may be decreased by the reaction of ozone with nitric oxide; thus, in some large urban areas, a decrease in local NO_X emissions can result in higher local ozone concentrations, leading to higher OH radical concentrations and increases in secondary $PM_{2.5}$. Because the precursors for ozone and $PM_{2.5}$ may be transported hundreds of kilometers, regional scale impacts must also be considered.

2. What guidance has EPA provided regarding ozone, $PM_{2.5}$ and regional haze interaction?

States must develop 8-hour ozone and $PM_{2.5}$ attainment demonstrations for most nonattainment areas. General criteria for attainment demonstrations are contained in 40 CFR part 51, appendix W (i.e., ''*EPA's Guideline on Air Quality Models*''). The EPA's May 1999 draft ''Guidance on the Use of Models and Other Analyses in Attainment Demonstrations for the 8-Hour Ozone NAAQS'' provides a set of general requirements that an air quality model should meet to qualify for use in an attainment demonstration for the 8-hour ozone NAAQS. The draft guidance encourages States to integrate $PM_{2.5}$ control strategies with strategies designed to attain the 8-hour ozone NAAQS and to meet reasonable progress goals for regional haze. In addition, the draft guidance presents some modeling/analysis principles to help States develop databases and capabilities for considering joint effects of control strategies for ozone, $PM_{2.5}$ and regional haze. Because emissions and meteorological conditions vary seasonally, the guidance recommends assessing the effects of an ozone control strategy on annual $PM_{2.5}$ concentrations by estimating effects on mean $PM_{2.5}$ for each season and using the resulting information to estimate annual impacts. Emission estimates for VOC, NO_X, primary $PM_{2.5}$, SO_2 and ammonia will be needed. In addition, the modeling should separately estimate the effects of the ozone strategy on the major components of $PM_{2.5}$: Mass associated with sulfates, nitrates, organic carbon, elemental carbon, and all other species. We believe that this approach is adequate to ensure that the 8-hour ozone standard will be implemented by States in a way that allows an optimal mix of controls for ozone, $PM_{2.5}$, and regional haze.

Similarly, EPA's draft attainment demonstration guidance for $PM_{2.5}$ and regional haze states that models intended to address secondary PM problems should also be capable of simulating ozone formation and transport (January 2, 2001 (draft),

''Guidance for Demonstrating Attainment of Air Quality Goals for $PM_{2.5}$ and Regional Haze''). The formation and transport of secondary PM are closely related to processes that are important in the formation and transport of ozone. Thus, it makes sense for programs designed to control ozone to be cognizant of programs to reduce $PM_{2.5}$ and improve visibility and vice versa. The $PM_{2.5}$ guidance suggests conducting a ''mid-course review'' of an approved $PM_{2.5}$ plan to review changes in air quality resulting from implementation of plans to reduce $PM_{2.5}$, regional haze, and ozone (see section E).

3. What is EPA proposing?

Today, we propose to continue the policy of encouraging each State with a $PM_{2.5}$ nonattainment area which overlaps, is near to, or otherwise affects an 8-hour ozone nonattainment area to take all reasonable steps to coordinate the required control measures needed to attain the standards in nonattainment areas and meet reasonable progress goals for regional haze. Specifically, States conducting modeling analyses for $PM_{2.5}$ should evaluate the concurrent effects of control strategies on estimated ozone levels. In addition, we encourage States conducting modeling analyses for ozone to estimate separately the effects of ozone control strategies on $PM_{2.5}$ and its precursors.

O. What emission inventory requirements should apply under the $PM_{2.5}$ NAAQS?

Emission inventories are critical for the efforts of State, local, tribal and federal agencies to attain and maintain the NAAQS that EPA has established for criteria pollutants including $PM_{2.5}$. Pursuant to its authority under section 110 of Title I of the CAA, EPA has long required States to submit emission inventories containing information regarding the emissions of criteria pollutants and their precursors. The EPA codified these requirements in 40 CFR part 51, subpart Q in 1979 and amended them in 1987.

The 1990 CAAA revised many of the provisions of the CAA related to attainment of the NAAQS and the protection of visibility in mandatory Class I Federal areas (certain national parks and wilderness areas). These revisions established new emission inventory requirements applicable to certain areas that were designated nonattainment for certain pollutants. In the case of particulate matter, the emission inventory provisions are in the general provisions under Section 172(c)(3).

In June 2002, EPA promulgated the Consolidated Emissions Reporting Rule (CERR)(67 FR 39602, June 10, 2002). The CERR consolidates the various emissions reporting requirements that already exist into one place in the CFR, establishes new reporting requirements for $PM_{2.5}$ and ammonia, and establishes new requirements for the statewide reporting of area source and mobile source emissions.

The CERR establishes two types of required emission inventories:

- Annual inventories
- 3-year cycle inventories

The annual inventory requirement is limited to reporting statewide emissions data from the larger point sources. For the 3-year cycle inventory, States will need to report data from all of their point sources plus all of the area and mobile sources on a statewide basis. A special case exists for the first 3-year cycle inventory for the year 2002 which is due on June 1, 2004. The EPA has designated 2002 as the new Base Year for 8-hour ozone, $PM_{2.5}$ and regional haze (November 18, 2002 EPA memorandum ''2002 Base Year Emission Inventory SIP Planning: 8-Hour Ozone, $PM_{2.5}$ and Regional Haze Programs'' *http://www.epa.gov/ttn/chief/eidocs/2002baseinven_102502new.pdf*).

States would estimate mobile source emissions by using the latest emissions models and planning assumptions available at the time the SIP is developed. The latest approved version of the MOBILE model should be used to estimate emissions from on-road transportation sources, in combination with the latest available estimates of vehicle miles traveled (VMT). The current version of the MOBILE model, MOBILE6.2, is used for areas outside California.[110] The model EMFAC2002 is used for California. The latest information on MOBILE6.2 is available at: *http://www.epa.gov/otaq/m6.htm.* The NONROAD model is currently available in draft form and can be used for estimates of non-road mobile source emissions: *http://www.epa.gov/otaq/nonrdmdl.htm.* By merging the information on point sources, area sources and mobile sources into a comprehensive emission inventory, State, local and Tribal agencies may do the following:

- Set a baseline for SIP development.
- Measure their progress in reducing emissions.
- Have a tool to support future trading programs.
- Answer the public's request for information.

EPA uses the data submitted by the States to develop the National Emission Inventory (NEI). The NEI is used by EPA to show national emission trends, as modeling input for analysis of potential regulations, and other purposes.

Most importantly, States need these inventories to help nonattainment areas develop and meet SIP requirements to attain the annual and 24-hour $PM_{2.5}$ NAAQS. There is a special situation regarding emission inventories from Tribal areas that should be considered. In the past, there have been instances where portions of tribal areas have been included in designated nonattainment areas, but when the baseline emission inventory was prepared, emissions from the tribal lands were not included. This has had the effect of preventing the tribes from generating emissions reductions from existing sources to develop emission offsets, as well as impairing the ability of the State to model as accurately as possible. We are encouraging the States and Tribes to work together to ensure that the information used in developing the baseline emission inventory is inclusive of all emissions from the nonattainment area.

In April 1999, EPA published the ''Emissions Inventory Guidance for Implementation of Ozone and Particulate Matter National Ambient Air Quality Standards (NAAQS) and Regional Haze Regulations,'' EPA–454/R–99–006. The EPA updated this guidance in August 2005.[111] The current version of this guidance is available at: *http://www.epa.gov/ttn/chief/eidocs/eiguid/index.html.* The EPA developed this guidance document to complement the CERR and to provide specific guidance to State and local agencies and Tribes on how to develop emissions inventories for 8-hour ozone, $PM_{2.5}$, and regional haze SIPs. While the CERR sets forth requirements for data elements, EPA guidance complements these requirements and indicates how the data should be prepared for SIP submissions. The SIP inventory also must be approved by EPA as a SIP element and is subject to public hearing requirements where the CERR is not. Because of the regulatory significance of the SIP inventory, EPA will need more documentation on how the SIP inventory was developed by the State as

[110] As in the past, EPA will provide sufficient time for state and local agencies to transition to any new motor vehicle emissions factor model, if one becomes available during the development of $PM_{2.5}$ SIPs.

[111] Emissions Inventory Guidance for Implementation of Ozone and Particulate Matter National Ambient Air Quality Standards (NAAQS) and Regional Haze Regulations,'' EPA–454/R–05–001, August 2005.

opposed to the documentation required for the CERR inventory. In addition, the geographic area encompassed by some aspects of the SIP submission inventory will be different from the statewide area covered by the CERR emissions inventory. If a State's 2005 emission inventory (or a later one) becomes available in time to use for an area subsequently redesignated nonattainment, then that inventory should be used. We also encourage the cooperation of the Tribes and the State and local agencies in preparing their emissions inventories.

Therefore, the basis for EPA's emission inventory program is specified in the CERR and the related guidance document. The EPA is interested in receiving comments on whether or not additional emission inventory requirements or guidance are needed to implement the $PM_{2.5}$ NAAQS. For example, do any of the following issues need to be defined through additional requirements or guidance?

- An important difference between inventories submitted in response to the CERR and SIP inventories is the issue of approvability. While it is likely that an inventory submitted under the CERR would be identical to the inventory submitted as part of a SIP, the SIP inventory will need to go through public hearing and formal approval by EPA as a SIP element. This approval process can be combined with other SIP elements. Should EPA specify an inventory approval process?
- Are the data elements specified within the CERR sufficient to develop adequate SIPs? For example, in the determination of RACT should more information on existing control devices be required?
- Currently the CERR requires the reporting of SO_2, VOC, NO_X, CO, Pb, PM_{10}, $PM_{2.5}$, and NH_3. VOC and PM are speciated by the emissions processing models based on speciation profiles for specific source categories. Is this approach sufficient, or should EPA require more specific emission component reporting such as specific organic compounds or groups of compounds or reporting of elemental carbon and organic carbon?
- The CERR allows states to adopt EPA developed emission estimates from area and mobile sources in lieu of making these estimates themselves if they accept these estimates for their emission inventory. Since 2002 has been designated as the new base year, should EPA require that States develop their own estimates for area and mobile sources?
- Are there other inventory issues that EPA should define through either regulation or guidance?

P. What stationary source test methods should States use under the $PM_{2.5}$ implementation program?

1. Will the existing stationary source test methods for particulate matter (PM) be acceptable for use in $PM_{2.5}$ SIPs?

We believe that states that need to adopt local control measures for primary particulate matter in nonattainment areas will need to revise their stationary source test methods. However, the acceptability of existing stationary source test methods for $PM_{2.5}$ SIPs depends upon what is measured under the State's current test methods for particulate matter. Information available to the Agency indicates that the majority of existing SIPs currently specify the use of stationary source test methods that quantify only filterable particulate matter. We believe that test methodologies that measure only filterable particulate matter would be acceptable in areas where no additional reductions of primary $PM_{2.5}$ and particulate precursor emissions are required to project attainment of the $PM_{2.5}$ NAAQS. The use of these existing stationary source test methods provide verification that $PM_{2.5}$ emissions are consistent with the levels emitted as a result of existing applicable requirements for filterable particulate matter. However, for areas where additional local control of primary particulate matter emissions are required as part of the attainment demonstration, we believe that existing test methodologies that measure only filterable particulate matter would not be acceptable. The use of existing source test methods potentially would limit the control measures available for developing cost effective strategies to achieve attainment of the $PM_{2.5}$ NAAQS. In addition, the existing test methods may not be acceptable for demonstrating compliance with emission limitations to achieve the $PM_{2.5}$ NAAQS under certain circumstances:

(1) Where the attainment demonstration includes control methodologies for PM precursors which are likely to result in a significant increase in the direct emissions of fine particulate matter (for example, ammonia injection to reduce NO_X emissions).

(2) Where the attainment demonstration includes control methodologies for PM precursors which are likely to result in a significant decrease in the direct emissions of fine particulate matter (for example, alkaline scrubbers to reduce SO_2 emissions) and incorporate these direct emissions reductions in their attainment demonstration or allow for the use of these reductions as credits for other programs.

2. Why are the existing stationary source test methods for PM deficient?

Most stationary source test methods specified in State rules do not adequately quantify either total PM emissions or $PM_{2.5}$ emissions. Additionally, some of the current stationary source test methods will not adequately provide a uniform indication of the sources' performance in controlling $PM_{2.5}$ emissions. Most source test methods referenced in SIPs provide a measurement of the particulate matter that is solid or liquid at a temperature specified in the method or applicable standard. Filtration temperatures of 250 °F and 320 °F are typical although other temperatures may be specified in a few test methods or applicable standards. Generally, these filterable particulate matter test methods are either identical or very similar to one of the ten Federal test methods published in Appendix A of 40 CFR Part 60 and used to determine compliance with New Source Performance Standards (NSPS). These test methods are adequate to evaluate the compliance status of a source for emissions of that component of particulate matter evaluated when the applicable rule was developed. However, these test methods do not provide a measurement of total particulate matter emissions, or $PM_{2.5}$ emissions.

The test method proposed to determine compliance with the first group of NSPS (36 FR 15713) determined the sum of the mass of material collected on or prior to the filters maintained at 250 °F and the material collected in the cooled impingers that followed the filter. While the material collected prior to the filter provided a measure of the filterable particulate material, the material collected in the impingers was stated to measure vapors in the stack that would become particulate matter at 70 °F (36 FR 15495). When combined, the method provided a measurement of the total particulate matter emissions from the facility tested. The promulgated test method (36 FR 24888) did not include the analysis of the impinger portion of the sampling train. To accommodate the change in the test method, EPA made adjustments in the promulgated emission limits to reflect the change in the test method. The EPA made adjustments of up to 50 percent in the promulgated emission limitations to

reflect the measurement of only the filterable portion of the emissions.

EPA recognized in setting several subsequent NSPS that the source test method used to determine compliance with the particulate matter emissions limits measured only part of the total particulate matter emitted by the applicable sources. This recognition was published on October 6, 1975, in the promulgated Revisions to Performance Testing Methods (40 FR 46250). Similarly, EPA acknowledged this in the proposal preamble to Subpart CC—Standards of Performance for Glass Manufacturing Plants (6/15/79) in the section ''Selection of Performance Test Methods: The use of EPA Reference Method 5—Determination of Particulate Emissions from Stationary Sources.''

In developing the NSPS emission limitations, it is evident that only a portion of the particulate matter emissions were considered. As a result, the test methods that EPA selected for determining compliance with these emission limitations measured only that same portion of the particulate matter emissions. It was recognized that these test methods were not suitable for quantifying the total emissions to the atmosphere and that the impinger portion of the sampling train contained the missing portion of the particulate matter emissions.

On December 17, 1990, EPA promulgated Method 202 in Appendix D of 40 CFR Part 51 (56 FR 65433) to provide a method for States to use to analyze the impinger (or ''back half'') content of PM emissions and provide a measure of the condensable particulate emissions. The principal procedures in Method 202 improved upon the original Method 5 back half analysis proposed in 1971. In developing this measurement method, EPA consulted with several State and local agencies and incorporated several options to simplify or accommodate existing policies and source testing methodologies for condensable particulate matter. We believe that by excluding the optional components, the use of EPA Method 202, combined with EPA Method 5 or EPA Method 17, provides a reasonable indication of total particulate matter emissions for the majority of stationary emission sources.

However, the combination of EPA Method 5 and Method 202 measures particulate matter that is larger than 2.5 micrometers in aerodynamic diameter, and will not provide a reasonable measurement of the emissions of $PM_{2.5}$. Methods are available that can separate particulate matter by aerodynamic size. On April 17, 1990, EPA promulgated EPA Method 201 and Method 201A to provide a source test method that separated filterable particulate matter greater than 10 micrometers from filterable particulate matter equal or smaller than 10 micrometers. The single cyclone used in these methods replaced the nozzle of EPA Method 17 to separate the two size classes of filterable particulate. This method allows sources to determine their emissions of filterable PM_{10} when there are size specific emission limits or when there is a need for size specific emission inventories. With the addition of a second smaller cyclone following the single cyclone of EPA Method 201A, the filterable particulate can be separated into three size classifications. These classifications include filterable particulate matter greater than 10 micrometers, filterable particulate matter equal or smaller than 10 micrometers but greater than 2.5 micrometers, and filterable particulate matter equal or smaller than 2.5 micrometers. This method is posted as Conditional Method 40 (CTM 40) on EPA's Emission Measurement Centers web page at *http://www.epa.gov/ttn/emc/ctm.html.* Of the methods mentioned previously, the most reliable measurement of total direct $PM_{2.5}$ emissions would combine the use of Conditional Method 40 with EPA Method 202.

Conditional Method 40 has been used at several facilities in the U.S. and the hardware required to implement this method has been readily available since the mid-1980's. The acceptability of a source using the existing SIP test methods for filterable particulate matter as an indication of the source's relative performance in controlling $PM_{2.5}$ emissions would depend on the source's level of condensable particulate matter emissions in relation to filterable PM emissions, the proportion of filterable particulate matter that is smaller than 2.5 micrometers, the add-on PM control device effectiveness, and the need to consider limiting the emissions of the condensable material. In areas where there is no need to reduce stationary source particulate matter emission levels to demonstrate attainment of the $PM_{2.5}$ NAAQS, the use of total filterable particulate test methods may be adequate to insure that existing levels of PM control are being maintained. However, in areas where a reduction of stationary source particulate matter emissions is incorporated into the attainment demonstration, the use of a test method that measures total $PM_{2.5}$ emissions would be more appropriate than existing test methods that measure only total filterable PM.

3. If the stationary source test methods are changed, will the existing emission limitations incorporated in SIPs need to be changed?

Changes in the source test method will require reevaluations of the emission limitations. The reevaluation will need to consider the interrelated impacts due to differences in the test method, characteristics of the particulate matter emissions from the sources, and intended changes in the stringency of the emission limitations. The following three examples provide a range of the relationships that can occur between the source test method and the characteristics of the particulate matter emissions. For sources with no condensable particulate matter emissions, a change from a total particulate matter test method (using the same particle size cutoff) to a $PM_{2.5}$ test method will result in lower measured emissions. The difference in mass measured by the two test methods depends on the size distribution of the filterable particulate matter emissions from the source. For sources with condensable particulate matter emissions, a change from a filterable particulate matter test method to a total particulate matter test method will result in higher measured emissions. The difference in mass measured by the two test methods depends on the relative emissions of filterable and condensable emissions from the source. For sources with condensable particulate matter emissions, a change from a total filterable particulate matter test method to a total $PM_{2.5}$ test method may increase or decrease the measured emissions. The increase or decrease and the magnitude of any change would depend on the particle size distribution of the filterable particulate matter and the magnitude of the condensable particulate matter emission.

As can be inferred from these three examples, the application of a single multiplier to convert existing emission limitations to a total $PM_{2.5}$ emission limitation would result in a variable change in the stringency of emission limitation. The use of a single multiplier would result in unplanned and variable changes in the stringency in the existing emission limitations. These changes may create unintended consequences for the affected sources and result in poorly understood and quantified estimates of the benefits.

4. The existing PM test methods and the emission limits based upon these methods have been acceptable since 1971, why do they need to be changed for $PM_{2.5}$?

Several changes have occurred over the last 30 years that have gradually eroded the predictive capabilities of particulate matter source test methods used in most SIPs to evaluate the sources performance in controlling the pollutant measured by the ambient air quality test method. In the 1970's and early 1980's, the ambient air quality test method quantified the total particulate matter suspended in the ambient air. At the beginning of this period, particulate matter control measures were relatively poor. Additionally, most of particulate matter control measures applied over the last 30 years have focused on filterable particulate matter. While some control measures for other air pollutants also resulted in collateral reductions in condensable particulate and particulate precursor emissions, these reductions were relatively small. As a result, the relative amount of sulfates, nitrates and condensed organic matter in the ambient air particulate matter was proportionally greater in the 1980's than it was in the 1970's. The promulgation of the PM_{10} NAAQS in 1987 resulted in further reductions in filterable PM from sources, but there were few non-attainment areas where control of the condensable constituents of PM_{10} was required in order to achieve attainment. As a result, stationary source control measures that addressed only the filterable component of particulate matter were generally adequate to achieve the PM_{10} NAAQS.

With the promulgation of the $PM_{2.5}$ NAAQS in 1997 and associated ambient air quality monitoring, speciation analyses of $PM_{2.5}$ show that a substantial portion of $PM_{2.5}$ consists of sulfates, nitrates and organic carbon. These constituents are also a substantial portion of the condensable particulate matter collected from stationary sources. With the increased application of increasingly efficient filterable particulate matter control measures, condensable emissions have become a larger percentage of overall $PM_{2.5}$ emissions for several stationary source categories.

Based upon the particle size distribution presented in Table 1.1–6 of AP–42, about 29 percent of the total filterable particulate matter is filterable $PM_{2.5}$. As a result, about 78 percent of the total $PM_{2.5}$ emissions would be condensable PM.[112] Since filterable particulate matter emissions controls have improved since 1971 and since most sources achieve substantially lower emissions than required by State and Federal emissions limitations, and condensable emissions have generally not been significantly reduced, the significance of the condensable emissions as a proportion of direct $PM_{2.5}$ emissions may be greater than indicated above. A test method that measures total filterable particulate matter, commonly including mostly particles larger than $PM_{2.5}$ and yet excluding condensable emissions, is a poor indicator of source performance at reducing $PM_{2.5}$ emissions.

5. What methods are available for measuring PM size and condensable PM from stationary sources?

EPA has adopted one of several methods that are available for classifying particulate matter by aerodynamic diameter. The method adopted is based upon the use of centrifugal forces created in cyclones to separate particulate matter into two aerodynamic size classifications. The cyclone specified in EPA Method 201 and 201A separates particulate matter with a nominal aerodynamic diameter greater than 10 micrometers from the remaining particulate matter. The addition of a second smaller cyclone following the EPA Method 201A cyclone as is specified in EPA Method CTM 40 separates the particulate matter that has an aerodynamic diameter greater than 2.5 micrometers from the remaining particulate matter. A filter follows the final cyclone of these particle sizing methods to collect the smaller material. Under EPA's source test methods to separate PM based on particle size, both of the cyclones and the filter are maintained at the flue gas temperature. Therefore, any material that is in a vapor state in the flue gas but would be condensed as a result of dilution and cooling when released to the ambient air will not be measured by these particle sizing methods.

Vapors that would condense to form particulate matter in the ambient air can be quantified by EPA Method 202. The EPA Method 202 is intended for use in conjunction with a filterable particulate matter test method such as Method 201A or CTM 40. Impingers containing cold water are used by most methods to condense water vapor for determining the flue gas moisture content. Besides condensing water vapor in the flue gas, organic and inorganic chemical vapors are also condensed in these impingers. In EPA Method 202, the organic and inorganic vapors condensed in the impingers are separated with an organic solvent and weighed after evaporating the water and organic solvent used for separation.

As recommended by the National Academy of Sciences, EPA and others are developing dilution based source test methods for collecting and analyzing $PM_{2.5}$. Rather than condensing vapors in chilled water, cool filtered dilution air condenses the vapors prior to collection on filters. In the new method developed by EPA, particulate matter is sized using the same cyclones used in CTM 40. However, the in-stack filter used in CTM 40 is removed so that all of the $PM_{2.5}$ particulate matter is collected at near ambient temperature on the filters.

6. Why is a new dilution-based test method being developed by EPA?

The use of dilution-based particulate matter sampling offers several advantages over the combination of EPA Method CTM 40 and Method 202. One advantage is that the vapors are condensed and chemical reactions occur in a manner similar to when stack gas is released to the atmosphere. As a result, the potential for particulate matter formation that may occur in water but would not occur in air is eliminated. Another advantage is that the potential for losing particulate matter during the evaporation of the impinger water is eliminated. With the use of multiple filter types, the use of dilution sampling methods will allow for the speciation of the collected $PM_{2.5}$ by the same methods used for speciation of ambient air particulate matter. Additionally, dilution-based methods allow for the measurement of the particle size distribution of the particulate matter smaller than 2.5 micrometers. This can be accomplished by modifying the hardware of the sampling equipment to extend the residence time of the sampled particulate matter. The extra residence time allows the ultrafine particulate matter initially formed during vapor condensation to grow toward its ultimate particle size distribution.

[112] The significance of the condensable fraction of $PM_{2.5}$ is illustrated using the original supporting data for the Subpart D NSPS cited previously. The promulgated standard was reduced by 50% because about half the emissions were filterable PM and the other half were condensable PM. However, only about 29 percent of the filterable particulate matter is filterable $PM_{2.5}$ (based upon the particle size distribution presented in Table 1.1–6 of AP–42). Therefore, about 78 percent of the total $PM_{2.5}$ emissions would be condensable PM {Total PM = 0.5 filterable + 0.5 condensable, Total $PM_{2.5}$ = (0.5 filterable × .29) + 0.5 condensable = 0.645, condensable $PM_{2.5}$ = 0.5/0.645 = 78%}.

7. What types of sources should use the new dilution-based test method?

The new dilution-based test method would be appropriate for most sources. Sources with very complex flue gas characteristics (e.g., having several acidic and alkali gases with semi-volatile organic matter) and those sources that want to generate a speciation profile specific to their facility should use the new dilution test method. Sources with very low $PM_{2.5}$ emission concentrations and low SO_2 and NO_X emission concentrations also may wish to use the new dilution method. However, the more complex operation and increased size of the equipment associated with the new method may persuade some sources to use an alternative method. Sources where the flue gas is near ambient temperature or where the sampled gas can be cooled to near ambient temperature could use CTM 40 or its equivalent to quantify $PM_{2.5}$ emissions. Sources with less complex flue gas characteristics may want to use CTM 40 combined with EPA Method 202.

8. What are the main features of the new test method?

The main features of the new test method are in the areas of sample extraction, particle sizing, sample flow rate measurement, dilution air conditioning, dilution air flow rate measurement, sample mixing with dilution air and sample filtration. An additional major feature, where particulate speciation is desired, is the method of extracting an aliquot of the diluted sample. Flue gas is extracted isokinetically at a flow rate that produces particulate matter sizing at 10 and 2.5 micrometers by the two in-stack cyclones. The sampled flue gas and the $PM_{2.5}$ particulate matter is extracted from the stack prior to dilution and cooling with ambient air that has been conditioned by removing excess moisture and ambient particulate matter with a HEPA filter. The objective of all the methods is to achieve complete mixing prior to filtration and to minimize sample losses on the internal surfaces of the hardware. The $PM_{2.5}$ is removed from the diluted sample gas by a Teflon filter. The $PM_{2.5}$ deposited on the internal surfaces of the hardware is quantitatively recovered with acetone. Both the Teflon filter and the $PM_{2.5}$ recovered from the internal surfaces of the sampler are weighed. When speciation of the $PM_{2.5}$ is desired, aliquots of the diluted sample gas are extracted for collection on filters. The ambient air speciation criteria are followed with respect to the filter media used and analytical finish of the three filters.

9. What is the schedule for finalization of the new test method?

We have posted the dilution-based $PM_{2.5}$ source test method on the TTN web as ''Conditional Test Method 39'' and expect that this method will provide the basis for a 40 CFR Part 51, Appendix M method to be proposed at a later date. Beyond proposing the EPA-developed dilution test method, we may identify the use of a source test method developed by a national voluntary consensus standard setting organization. Public Law 104–113, also known as the National Technology Transfer and Advancement Act (NTTAA), requires that we use technical standards that are developed or adopted by voluntary consensus standards bodies as a means to carry out policy objectives where appropriate. The law also requires us to consult with such bodies when it is in the public interest to participate with them in the development of technical standards. Recently, the ASTM Source and Ambient Atmospheres Committee developed a $PM_{2.5}$ source test method similar to the method we have developed. We believe that it is in the interest of the public and the Agency to participate in the ASTM process of developing a $PM_{2.5}$ source test method. While we cannot predict when an ASTM standard will be available and whether it will be a suitable test method for EPA to specify for use in SIPs, we expect to make a decision on the final test method in the near future. We are aware of two manufacturers which have commercially available equipment meeting the specifications of CTM–39 and the draft ASTM certification.

10. How will use of this new method affect an areas emissions inventory and the emissions inventory for individual sources?

We do not expect that particulate matter emissions inventories will be significantly affected by the use of this new test method. The stationary source emissions of $PM_{2.5}$ are based upon existing filterable particulate matter size distributions and filterable and condensable particulate matter emission factors. The emission factor information is supported by source test data similar to that available from EPA Method CTM–40 and Method 202. However, it is unclear how the use of the new dilution sampling method will affect the $PM_{2.5}$ emission inventory for any particular source category. Source categories for which emission estimates for condensable particulate matter are not available or are under estimated may find that the inventoried emissions are significantly higher. As indicated previously, the addition of the condensable portion of $PM_{2.5}$ to filterable $PM_{2.5}$ may increase direct $PM_{2.5}$ emissions by a factor of five or more. Source categories for which the condensable particulate matter emission factor is based on EPA Method 202 test data that excludes the nitrogen purge may find that their emissions are somewhat lower. The significance of this lower mass of condensable particulate matter depends on the mass of filterable and condensable particulate matter compared to the mass of particulate artifact formed by the dissolved SO_2 that was not removed from the impinger water by the nitrogen purge.

11. How will use of this new method affect a State's implementation program more broadly?

The use of this new dilution method (or the use of EPA Method CTM 40 combined with Method 202) to obtain measured source specific emissions of $PM_{2.5}$ will improve the quality of the emissions inventory for stationary sources and will aid in the development of a more reliable attainment strategy. In addition, we expect the use of the speciation capabilities of this new source test method will expand the information available to formulate attainment demonstration strategies and to justify the most effective strategy. For example, this new source-specific speciation data may allow the State to identify additional local control measures for consideration. The combined information from the ambient air speciation network and individual source category speciation data will aid in developing the most efficient attainment strategies. In addition, after initial attainment strategies are implemented, speciation profiles for the most significant sources of direct $PM_{2.5}$ combined with data from the ambient monitoring network may enable States to make important mid-course revisions to attainment strategies as needed.

Q. How can potentially inadequate source monitoring in certain SIP rules be improved?

1. How Does Improved $PM_{2.5}$ Monitoring Relate to Title V Monitoring?

Two provisions of EPA's State and federal operating permits program regulations require that title V permits contain monitoring requirements. The ''periodic monitoring'' rules, 40 CFR 70.6(a)(3)(i)(B) and 71.6(a)(3)(i)(B), require that:

''[w]here the applicable requirement does not require periodic testing or instrumental or noninstrumental monitoring (which may consist of recordkeeping designed to serve as monitoring), [each title V permit must contain] periodic monitoring sufficient to yield reliable data from the relevant time period that are representative of the source's compliance with the permit, as reported pursuant to [§ 70.6(a)(3)(iii) or § 71.6(a)(3)(iii)]. Such monitoring requirements shall assure use of terms, test methods, units, averaging periods, and other statistical conventions consistent with the applicable requirement. Recordkeeping provisions may be sufficient to meet the requirements of [§ 70.6(a)(3)(i)(B) and § 71.6(a)(3)(i)(B)].''

The ''umbrella monitoring'' rules, §§ 70.6(c)(1) and 71.6(c)(1), require that each title V permit contain, ''[c]onsistent with paragraph (a)(3) of this section, compliance certification, testing, monitoring, reporting, and recordkeeping requirements sufficient to assure compliance with the terms and conditions of the permit.''

In a final rule entitled ''Revisions to Clarify the Scope of Certain Monitoring Requirements for Federal and State Operating Permits Programs'' (69 FR 3202, January 22, 2004), EPA announced a four-step strategy for improving existing monitoring where necessary through rulemaking or other programmatic actions, while reducing resource-intensive, case-by-case monitoring reviews and so-called ''gap-filling'' in title V operating permits. Improved $PM_{2.5}$ monitoring, as discussed in this preamble and to be addressed in future guidance, is part of that strategy.

In the first step, the ''umbrella monitoring'' rule (69 FR 3202, January 22, 2004), EPA decided not to adopt proposed revisions to the regulatory text of §§ 70.6(c)(1) and 71.6(c)(1) (67 FR 58561, September 17, 2002) and instead ratified the text of those rules without making any changes. The EPA also announced that notwithstanding the recitation in §§ 70.6(c)(1) and 71.6(c)(1) of monitoring as a permit element, EPA has determined that these provisions do not establish a separate regulatory standard or basis for requiring or authorizing review and enhancement of existing monitoring independent of any review and enhancement as may be required under §§ 70.6(a)(3) and 71.6(a)(3). The EPA explained that §§ 70.6(c)(1) and 71.6(c)(1) require that title V permits contain: (1) Monitoring required by ''applicable requirements'' under the Act, as that term is defined in §§ 70.2 and 71.2 [113]; and (2) such monitoring as may be required under §§ 70.6(a)(3)(i)(B) and 71.6(a)(3)(i)(B). See *Appalachian Power Co.* v. *EPA*, 208 F.3d 1015 (DC Cir. 2000). Thus, for monitoring, EPA explained, §§ 70.6(c)(1) and 71.6(c)(1) constitute ''umbrella provisions'' that direct permitting authorities to include monitoring required under existing statutory or regulatory authorities in title V permits. Based on EPA's interpretation of the Act, the plain language and structure of §§ 70.6(c)(1) and 71.6(c)(1) and the policy reasons described in the preamble to the umbrella monitoring rule (see 69 FR at 3204), EPA concluded that where the periodic monitoring rules do not apply, §§ 70.6(c)(1) and 71.6(c)(1) do not require or authorize a new and independent type of monitoring in permits in order for the permits to contain monitoring to assure compliance as required by the Act.

In the ''umbrella monitoring'' rule, EPA also announced plans to address monitoring in three related rulemaking actions. First, EPA announced plans to encourage States to improve potentially inadequate monitoring in certain SIP rules through this preamble and specifically through separate guidance to be developed later in connection with this rulemaking. The guidance is expected to describe methods of improving monitoring frequency or adopting more appropriate monitoring for States to consider in developing their $PM_{2.5}$ SIPs and to illustrate the amount of credit that States could receive in $PM_{2.5}$ SIPs for adopting such improved monitoring. In particular, the guidance is expected to address the widespread practice of using visual techniques, such as visible emissions checks, to show compliance with particulate matter limits. As discussed in section Q.2 below, we are concerned that visible emissions techniques may be inadequate to detect $PM_{2.5}$ emissions in some circumstances. To the extent that States implement this $PM_{2.5}$ guidance and revise their SIPs to adopt improved monitoring, then further actions by the State or EPA to bring an area into attainment may be unnecessary.

In addition, EPA announced plans to identify and consider improving potentially inadequate monitoring in certain federal rules or in SIP rules not addressed in connection with the $PM_{2.5}$ implementation guidance or rulemaking over a longer time frame. Specifically, EPA announced its intent to publish an advance notice of proposed rulemaking requesting comment on what inadequate monitoring may exist in federal applicable requirements and seeking suggestions as to the ways in which inadequate monitoring in such rules could be improved. EPA also announced its intent to request comment on inadequate monitoring that may exist in other rules, such as SIP rules not addressed in connection with this $PM_{2.5}$ rulemaking and guidance. The EPA indicated that comments received on the ANPR will inform its decision as to what steps to take next, such as whether to undertake national rulemakings to revise federal rules such as NSPS or NESHAP. Finally, EPA announced plans to publish a separate proposed rule to address what monitoring constitutes ''periodic'' monitoring under §§ 70.6(a)(3)(i)(B) and 71.6(a)(3)(i)(B) and what types of monitoring should be created under §§ 70.6(a)(3)(i)(B) and 71.6(a)(3)(i)(B). Together with the umbrella monitoring rule, these three related rulemaking actions comprise EPA's four-step strategy for improving existing monitoring where necessary on a programmatic basis.

2. Are Instrumental Techniques More Appropriate Than Visual Emissions (VE) Techniques for Monitoring Compliance With PM Emissions Limits, for Some Situations and Applications?

We have a concern about the reliance on VE techniques (which are based on observations of visible emissions or opacity) for monitoring compliance with particulate matter emissions limits, in certain situations. For example, in situations where a facility has a low margin of compliance with its emission limit [*e.g.*, the emission limit is 25 milligrams of $PM_{2.5}$ per dry standard cubic meter (mg/dscm) and actual emissions are 22.5 mg/dscm, leaving a margin of compliance of 2.5 mg/dscm], VE monitoring may not provide the level of sensitivity necessary to monitor compliance. We also have a concern about the infrequency of the monitoring sometimes associated with the use of these VE monitoring techniques. Although visible emissions and the opacity of visible emissions are indicators of a change in PM emissions levels, we believe the use of available instrumental monitoring technologies that provide a more direct measure of the pollutant of concern, $PM_{2.5}$, constitute improved monitoring techniques and are the more appropriate

[113] The term ''applicable requirements'' includes, but is not limited to: monitoring required under the compliance assurance monitoring (CAM) rule, 40 CFR part 64, where it applies; monitoring required under federal rules such as new source performance standards (NSPS) in 40 CFR part 60, national emissions standards for hazardous air pollutants (NESHAP) in 40 CFR part 61, maximum achievable control technology (MACT) standards in 40 CFR part 63, and the acid rain program rules in 40 CFR parts 72 through 75; and monitoring required in EPA-approved SIP, TIP and FIP rules.

method in many cases. These instrumental techniques include bag leak detectors (BLD), and particulate matter continuous emissions monitoring systems (PM CEMS). In this proposal, we are encouraging States to adopt improved monitoring techniques for $PM_{2.5}$ in their SIPs, and we plan to show, via separate guidance, how States can improve emissions reductions and therefore increase credits in their SIPs if they adopt the improved monitoring for selected sources. See the discussion above in section I.17 for potential ways to obtain emissions reductions through improved monitoring or controls. Note that the improved monitoring techniques may also be appropriate for sources with PM_{10} emissions.

With respect to the frequency of VE monitoring, we believe more frequent monitoring will reduce the potential for excess emissions to occur unnoticed and, thus, will minimize the duration of excess emissions periods. An example is the monitoring of VE from a fabric filter control device utilizing weekly visual observations. The potential exists for excess emissions to occur during the entire period between observations, or up to seven days. Increasing the frequency of observations to a daily basis significantly reduces the potential duration of any excess emissions period. For example, consider an emissions unit controlled with a fabric filter that emits 15 tons per year $PM_{2.5}$ (filterable), and has no visible emissions during normal operation. For the baseline condition, assume an excess emissions rate of 5 percent. By increasing the frequency of observations from a weekly to a daily basis, the exceedences are observed and corrective action and repair are taken in a more timely manner; the resulting emissions reduction ranges from 11 to 13 tons per year filterable $PM_{2.5}$, or 37 to 81 percent reduction of the potential excess emissions.[114] If the potential emissions reduction for filterable PM_{10} also is considered, the PM reductions would include an additional 6.3 to 8.0 tons per year depending on the calculation method used.

With respect to improved monitoring techniques for $PM_{2.5}$, we believe currently available instrumental techniques are more capable of detecting changes in performance of the control device than visual observations or COMS, in some applications, such as at low emissions levels sometimes required for compliance with $PM_{2.5}$ emissions limits. Furthermore, unlike periodic visual observations, these instrumental techniques provide information on a continuous basis. Consequently, we believe use of these instrumental techniques can reduce the occurrence of excess emissions because (1) they are capable of sensing a change in performance that might not be sensed by a visual technique and (2) when excess emissions occur, the duration of excess emissions will be reduced as a result of the frequency of monitoring. An example of an improved monitoring technique is the use of a BLD to monitor $PM_{2.5}$ emissions from a fabric filter control device in lieu of weekly visual observations. Consider a model emissions unit emitting 15 tons per year $PM_{2.5}$ (filterable). For the baseline condition, assume an excess emissions rate of 5 percent. By using a continuous instrumental technique, such as a BLD, rather than weekly visual observations, the emissions from potential excess emissions events would be reduced by 11 to 14 tons per year of filterable $PM_{2.5}$. If the potential emissions reduction for filterable PM_{10} also is considered, the PM reductions would be an additional 6.8 to 8.5 tons per year.[115]

Use of a PM CEMS is another improved monitoring technique. PM CEMS technology provides the opportunity to quantitatively monitor PM emissions levels (concentration or emissions rates). This provides the source owner/operator with an additional level of information that can be useful for understanding and operating the process and air pollution control device. Furthermore, this technology will provide the State with quantitative information on actual PM emissions, which will help improve the inventory and achieve compliance with the NAAQS for $PM_{2.5}$.

To inform our guidance development, we are asking for comment, information, and relevant data on these monitoring issues. Specifically:

(1) In certain instances or applications, are we correct in our belief that improved monitoring techniques are available and are more appropriate to use than VE techniques for monitoring compliance with $PM_{2.5}$ emissions? Based on your experience, in which cases do you believe improved monitoring techniques are more appropriate than VE techniques for monitoring compliance with $PM_{2.5}$ (or PM, in general) emissions limits, and what monitoring techniques would you recommend? Based on your experience, are BLD and PM CEMS reliable, cost-effective methods that are more sensitive then VE techniques for monitoring compliance with PM emissions?

(2) Will increasing the frequency of VE observations resolve the issue of applicability of VE techniques for monitoring compliance with $PM_{2.5}$ emissions? In other words, are there situations in which increased VE frequency (*i.e.*, daily versus weekly) would be expected to have no impact on compliance with $PM_{2.5}$ emission limits? If so, please provide relevant data and explanation of such situations.

(3) Do we need to mandate through rulemaking a move away from VE techniques for monitoring compliance with $PM_{2.5}$ and PM emissions limits, in certain situations and applications? If so, in what cases?

(4) Should our effort with regard to the use of improved monitoring techniques in lieu of VE monitoring be focused on applicable requirements established/relied upon for compliance with the $PM_{2.5}$ standard, or should we more broadly address other applicable requirements where VE techniques are commonly used (*e.g.*, TSP, PM_{10})?

In addition, we also request comment, information, and relevant data on any other issues relating to the use of VE techniques for monitoring compliance with particulate matter emission limits.

3. What constitutes improved monitoring?

Additional Reductions from Existing Rules. We request comment on the following approach that States may choose to implement to reduce emissions through the improved monitoring of emission controls at stationary sources. An improved monitoring control measure would increase emissions reduction for existing rules. These emissions reductions would be achieved by increasing the monitoring frequency or improving the monitoring technique of the add-on air pollution control device operation and the process operation above the level currently required in existing rules. The increased frequency or improved technique would allow owners or operators to achieve greater emissions reductions by identifying and correcting periods of excess emissions. State, local, and Tribal agencies could use the improved monitoring control measure option to reduce emission levels and receive credits. As described in the docket, State, local, and Tribal air pollution agencies who have source owners/operators increase monitoring frequency at their facilities could achieve emissions reductions up to 13 percent, and those who improve the monitoring technique could achieve emissions reductions up to 15

[114] ''Impact of Improved Monitoring on $PM_{2.5}$ Emissions,'' memorandum from L. Barr and K. Schaffner, RTI International, to B. Parker, U.S. Environmental Protection Agency. December 2003.

[115] Ibid.

percent.[116] Nonattainment areas where additional reductions are needed to help the area achieve compliance with the NAAQS could implement an improved monitoring measure. State, local, and Tribal air pollution agencies could set a size cutoff or other criteria that would define which facilities would be subject. State, local, and Tribal agencies could receive SIP credits because enforceable improved monitoring or voluntary programs meeting EPA's voluntary policies for SIP credit could achieve additional emissions reductions for facilities in the area.

Improved monitoring could come in the form of (1) conducting the currently required monitoring more frequently (i.e., increased monitoring frequency), (2) changing the monitoring technique to a parameter more closely related to $PM_{2.5}$ and its precursors (i.e., an improved monitoring technique), (3) changing the technique to monitoring $PM_{2.5}$ and its precursors, or (4) a combination of these improvements. These types of monitoring improvements could be conducted for both controlled and uncontrolled emission units. The improved monitoring control measure would require facilities to pay more attention to the operation of add-on air pollution control devices and the process operation. The additional attention will reduce excess emission periods and increase emissions reductions for existing rules.

For the purposes of discussion today, we are focusing on two scenarios. The first scenario involves increased monitoring frequency for controlled emission units. The second scenario incorporates improved monitoring techniques that include upgrading to a bag leak detector (BLD) monitoring device and upgrading to a PM continuous emissions monitoring system (CEMS) for controlled emission units.

As an example of improved monitoring, consider a facility that currently monitors for visible emissions once per day voluntarily increasing its monitoring frequency of visible emissions to once per hour, or installing a BLD system that continuously monitors the control device. Under the improved monitoring control measure, the source owners/operators would be more likely to detect the presence of a problem and to correct it more quickly. Expedient detection and correction of problems will result in reduced periods of excess emissions and, consequently, lower emissions. The increased monitoring frequency works to reduce the time between equipment failure and its discovery by plant personnel. The underlying assumption is, of course, that faster discovery leads to faster correction.

The improved monitoring technique provides more certainty in detecting the presence of a problem that may have gone unnoticed with the previous technique. For example, consider a facility that monitors opacity with a COMS as a surrogate for particulate matter. The facility's opacity, as measured by the COMS, is consistently at 10 percent. However, emissions test data have shown that, when a new BLD monitoring system is applied, the facility can be exceeding its PM limit at an opacity less than 10 percent. In this example, application of an improved monitoring technique provides a more direct and more sensitive measurement of the pollutant of concern (PM vs. opacity) and allows the facility to better track performance of the control device and its emissions levels.

In addition to the improved monitoring measures, there are other ways to achieve significant $PM_{2.5}$ emissions reductions, including requiring add-on air pollution controls for uncontrolled emissions units that are capable of being controlled. In this type of approach, State, local, and Tribal agencies could require large uncontrolled emission units to be controlled with new air pollution control devices. Fabric filters would control filterable $PM_{2.5}$ emissions while other control devices such as scrubbers would control both filterable and condensable $PM_{2.5}$ emissions. In one example for a large uncontrolled unit, $PM_{2.5}$ emissions (filterable) may be reduced by 131 tons per year when a fabric filter achieving 99 percent control efficiency is installed. The cost effectiveness to install this new control device would be determined based on the annualized cost of operating the fabric filter and the emission reduction of $PM_{2.5}$ achieved by the device. If co-controlled pollutants are included in the analysis, *e.g.*, PM_{10} filterable emissions, then the emissions reductions achieved by the new fabric filter would include an additional 260 tons per year. The total emission reduction for this source would be 390 tons per year; the cost-effectiveness values with collateral benefits included will be even lower. The fabric filter in this example would be monitored with a BLD system on a continuous basis (at least four times per hour).

What are the Assumptions Used to Determine the Reductions? We estimated the emissions reductions that can be achieved by implementation of the improved monitoring measures. Consistent with the baseline excess emissions rate established in the compliance assurance monitoring (CAM) rule (40 CFR part 64) analysis, we assumed an initial excess emissions rate of five percent each year. Under the NSPS and other federal rules, an excess emissions rate greater than five percent is a trigger for increased reporting, and facilities generally ensure that they do not exceed this threshold level of excess emissions to avoid increased reporting. Of course, there may be exceptions to this assumption, where facilities have excess emissions rates greater than 5 percent. The percentage of excess emissions represents a period of noncompliance when emissions are likely to be above the allowable emissions rates. Increased frequency monitoring will help owners or operators of facilities to maintain the effectiveness of emissions controls by identifying excursions early and repairing or adjusting the control device immediately. The length of time that an emissions unit is experiencing excess emissions is directly related to the level of excess emissions from the source. Reducing the amount of time the emission unit operates in this mode will reduce its actual emissions to the atmosphere.

In this study, we made two assumptions regarding the control efficiency of the add-on air pollution control device during excess emissions periods. In one method, we assumed the control device fails catastrophically; that is, its control efficiency is zero percent. We realize that some add-on air pollution control devices fail catastrophically during malfunctions, while others operate at some efficiency less than optimal but greater than zero. For the purposes of the study and for simplification, we made the assumption of zero percent control in this method. The control efficiency could also be estimated at some value between zero and the design control efficiency. In an alternative method, the control efficiency during excess emissions periods was estimated to be 80 percent of the design efficiency.

The potential emissions reductions examined here mostly address direct, filterable $PM_{2.5}$ and also address condensable $PM_{2.5}$ only where the control device was likely to achieve reductions for condensable emissions. Additional emissions reductions may also be achieved for co-pollutants emitted from the emissions units. We

[116] "Impact of Improved Monitoring on $PM_{2.5}$ Emissions," memorandum from L. Barr and K. Schaffner, RTI International, to B. Parker, U.S. Environmental Protection Agency. December 2003.

believe that control for these other pollutants, e.g., PM_{10}, TSP, and HAP, may also be improved by the monitoring measures. However, these improvements are not accounted for here. Improved monitoring, i.e., increased frequency for existing monitoring instruments or improved monitoring techniques, could also be applied to the precursors of $PM_{2.5}$ to achieve additional potential reductions.

The improved monitoring control measure would increase emissions reductions for existing rules. The emissions reduction achieved would not necessarily be reflected in future emissions inventory data but rather would be reflected in lower ambient air monitoring concentrations.[117] In assessing emissions from a particular facility, we generally assume 100 percent compliance for 100 percent of the operating time. However, excess emissions occur as a result of less than full compliance with standards, rules, and regulations. For example, a facility with an air pollution control device designed to achieve a 95 percent control efficiency will achieve the design efficiency if maintained and operated properly. Currently, the owner or operator of such a facility would conduct a prescribed monitoring technique (control device parameter, process parameter, or pollutant concentration) at a prescribed frequency. Operation outside of limits set for the monitored parameter(s) is an excursion for CAM rule purposes (and may be an exceedance for other rules) and may be an indication of excess emissions.

In accordance with CAM rule requirements, we assumed that facilities are currently required to monitor add-on control devices of applicable emission units at least once per day. With this approach, we ensure that the emissions reductions achieved by the CAM rule are not double-counted. We determined previously during the CAM rule development that the detection of a problem with an add-on air pollution control device that is monitored once per day could take up to 12 hours to detect. After the problem has been detected, it may take an additional 24 hours to conduct the repair, during which time the process may be emitting above the emissions limit. The entire excess emissions period could last up to 36 hours. By increasing the frequency of monitoring and conducting diligent repair, the time required to detect a problem will decrease, and the time a unit operates in excess emission mode or malfunction will decrease.

Examples of the Emissions Reductions that Can Be Achieved. In a six-metropolitan statistical area (MSA) mini-study, we reviewed the $PM_{2.5}$ emissions data (filterable and some condensable) from the 1999 NEI version 3 for all emission points at stationary sources located in the MSAs. We applied the improved monitoring control measures to only those emission points in the MSA that are controlled with fabric filters, electrostatic precipitators, and scrubbers. This subset included a total of 689 emission points at 128 facilities.

Based on review of emission points with add-on air pollution control devices, we found that $PM_{2.5}$ emissions (filterable/some condensable) can be reduced from 0.25 percent up to 13 percent following the application of a requirement to conduct more frequent monitoring. Potential $PM_{2.5}$ emissions reductions ranged from 89 tons per year to 4,600 tons per year with increased monitoring frequency. We also found that $PM_{2.5}$ emissions (filterable/some condensable) can be reduced from 2.5 percent to 15 percent by requiring an improved monitoring technique such as a PM CEMS (and a corollary increased frequency). The potential $PM_{2.5}$ emissions reductions ranged from 810 to 5,300 tons per year. We analyzed the emissions reductions achievable by reducing the excess emission rate from the nominal 5 percent excess emissions to an excess emissions rate of 2.5 percent (half of the nominal excess emission rate), 0.46 percent (represents one week of excess emissions each year, 40 hours out of 8760), and 0 percent (no excess emissions). As mentioned previously, there may be some facilities with an excess emissions rate even greater than 5 percent; in these instances, the potential emissions reductions due to improved monitoring may be even greater. The emissions reduction calculation for application of an improved monitoring control measure included a certainty factor related to detecting excess emission periods and assurance of emissions levels. The certainty factor for PM CEMS was 1.0, the factor for BLD was 0.95, and the factor for parametric monitoring was 0.90. The certainty factor for visual emissions and COMS when used to monitor PM was also 0.90.

In another example of an improved monitoring technique, a BLD monitoring system was applied only to the subset of emission units in the six MSA area that are controlled with fabric filters. A total of 102 facilities were affected by this option. In this scenario, the emission reduction (filterable $PM_{2.5}$ only) was determined to be 0.78 to 12 percent, or 280 to 4,100 tons per year.

Costs to conduct monitoring at an increased frequency included the cost to develop the more frequent monitoring approach and the incremental annual costs for recordkeeping, reporting, and certification related to the improved monitoring. Costs to implement an improved monitoring technique included the total annual cost for the new monitoring equipment, including the recordkeeping and reporting costs associated with the new monitoring. We anticipate that changes to monitoring would be incorporated into individual facility permits at permit renewal, to help minimize costs to air agencies and source owners/operators; costs related to incorporating the improved monitoring into permits on a quicker basis than regular permit renewal have not been assessed. The cost algorithms for the six-MSA study are delineated in the ''Improved Monitoring'' memorandum. The cost-effectiveness values include the emissions reductions for $PM_{2.5}$ filterable and some condensable. When reduction of co-pollutants are included in the cost-effectiveness analysis, the cost-effectiveness values are even lower. States can compare the cost effectiveness for improved monitoring to the cost effectiveness of other $PM_{2.5}$ control measures when selecting the mix of measures for their implementation plans.

The methods for estimating emission reductions and cost effectiveness ranges for the six-city study discussed in this section are based on the best technical information we had available. We recognize that commenters may have suggestions for ways to improve these estimates. Thus, to inform our guidance development, we solicit your comments on a number of issues. We solicit your comments on these control measures for increased frequency of monitoring and improved monitoring technique. We also request your comments on the feasibility of co-pollutant control due to improved monitoring measures. We also solicit submission of developed examples of improved monitoring, including a description of the measure, monitoring data, etc., if available. Finally, we encourage submission of methodologies—complete with equations and explanations—for estimating emissions reductions due to improved monitoring other than those referenced here.

[117] In the six metropolitan statistical areas reviewed for this study, 100 percent rule effectiveness and 100 percent rule penetration was shown in the 1999 NEI version 3 for all facilities.

R. What guidance should be provided that is specific to Tribes?

This section summarizes guidance for Tribes offered in various parts of this proposal. The 1998 Tribal Authority Rule (TAR) (40 CFR part 49), which implements section 301(d) of the CAA, gives Tribes the option of developing tribal implementation plans (TIPs). Specifically, the TAR provides for the Tribes to be treated in the same manner as a State in implementing sections of the CAA. However, Tribes are not required to develop implementation plans. The EPA determined in the TAR that it was inappropriate to treat Tribes in a manner similar to a State with regard to specific plan submittal and implementation deadlines for NAAQS-related requirements, including, but not limited to, such deadlines in CAA sections 110(a)(1), 172(a)(2), 182, 187, and 191.[118]

If a Tribe elects to do a TIP, we will work with the Tribe to develop an appropriate schedule which meets the needs of the Tribe, and which does not interfere with the attainment of the NAAQS in other jurisdictions. The Tribe developing a TIP can work with the EPA Regional Office on the appropriateness of addressing RFP and other substantive SIP requirements that may or may not be appropriate for the Tribe's situation.

The TAR indicates that EPA is ultimately responsible for implementing CAA programs in Indian country, as necessary and appropriate, if Tribes choose not to implement those provisions. For example, an unhealthy air quality situation in Indian country may require EPA to develop a FIP to reduce emissions from sources on the reservation. In such a situation, EPA, in consultation with the Tribe and in consideration of their needs, would work to ensure that the NAAQS are met as expeditiously as practicable. Likewise, if we determine that sources in Indian country could interfere with a larger nonattainment area meeting the NAAQS by its attainment date, we would develop a FIP for those sources in consultation with the Tribe, as necessary or appropriate.

The TAR also provides flexibility for the Tribe in the preparation of a TIP to address the NAAQS. If a Tribe elects to develop a TIP, the TAR offers flexibility to Tribes to identify and implement—on a Tribe-by-Tribe, case-by-case basis—only those CAA programs or program elements needed to address their specific air quality problems. In the proposed Tribal rule, we described this flexible implementation approach as a ''modular approach.'' Each Tribe may evaluate the particular activities, including potential sources of air pollution within the exterior boundaries of its reservation (or within non-reservation areas for which it has demonstrated jurisdiction), which cause or contribute to its air pollution problem. A Tribe may adopt measures for controlling those sources of $PM_{2.5}$-related emissions, as long as the elements of the TIP are ''reasonably severable'' from the package of elements that can be included in a whole TIP. A TIP must include regulations designed to solve specific air quality problems for which the Tribe is seeking EPA approval, as well as a demonstration that the Tribal air agency has the authority from the Tribal government to develop and run their program, the capability to enforce their rules, and the resources to implement the program they adopt. In addition, the Tribe must receive an ''eligibility determination'' from EPA to be treated in the same manner as a State and to receive authorization from EPA to run a CAA program.

EPA would review and approve, where appropriate, these partial TIPs as one step of an overall air quality plan to attain the NAAQS. A Tribe may step in later to add other elements to the plan, or EPA may step in to fill gaps in the air quality plan as necessary or appropriate. In approving a TIP, we would evaluate whether the plan interferes with the overall air quality plan for an area when Tribal lands are part of a multi-jurisdictional area.

Because many of the nonattainment areas will include multiple jurisdictions, and in some cases both Tribal and State jurisdictions, it is important for the Tribes and the States to work together to coordinate their planning efforts. States need to incorporate Tribal emissions in their base emission inventories if Indian country is part of an attainment or nonattainment area. Tribes and States need to coordinate their planning activities as appropriate to ensure that neither is adversely affecting attainment of the NAAQS in the area as a whole.

S. Are there any additional requirements related to enforcement and compliance?

In general, for a SIP regulation to be enforceable, it must clearly spell out which sources or source types are subject to its requirements and what its requirements (e.g., emission limits, work practices, etc.) are. The regulation also needs to specify the time frames within which these requirements must be met, and must definitively state recordkeeping and monitoring requirements appropriate to the type of sources being regulated. The recordkeeping and monitoring requirements must be sufficient to allow determinations on a continuing basis whether sources are complying. An enforceable regulation must also contain test procedures in order to determine whether sources are in compliance.

Under the Title V regulations, major sources have an obligation to include in their Title V permit applications all emissions for which the source is major and all emissions of regulated air pollutants. The definition of regulated air pollutant in 40 CFR 70.2 includes any pollutant for which a NAAQS has been promulgated, which would include both PM_{10} and $PM_{2.5}$. To date, some permitted entities have been using PM_{10} emissions as a surrogate for $PM_{2.5}$ emissions. Upon promulgation of this rule, EPA will no longer accept the use of PM_{10} as a surrogate for $PM_{2.5}$. Thus, sources will be required to include their $PM_{2.5}$ emissions in their Title V permit applications, in any corrections or supplements to these applications, and in applications submitted upon modification and renewal.[119] Sources must continue to identify their PM_{10} emissions in their applications as described above because the original PM_{10} NAAQS remains in effect.

T. What requirements should apply to emergency episodes?

Currently, subpart H of 40 CFR part 51 specifies requirements for SIPs to address emergency air pollution episodes and for preventing air pollutant levels from reaching levels determined to cause significant harm to human health. We anticipate proposing a separate rulemaking in the future to update portions of that rule to address the 8-hour ozone and $PM_{2.5}$ NAAQS.

[118] See 40 CFR 49.4(a). In addition, EPA determined it was not appropriate to treat tribes similarly to states with respect to provisions of the CAA requiring as a condition of program approval the demonstration of criminal enforcement authority or providing for the delegation of such criminal enforcement authority. See 40 CFR 49.4(g). To the extent a tribe is precluded from asserting criminal enforcement authority, the federal government will exercise primary criminal enforcement responsibility. See 40 CFR 49.8. In such circumstances, tribes seeking approval for CAA programs provide potential investigative leads to an appropriate federal enforcement agency.

[119] See 40 CFR 70.5(c)(3)(i), 70.5(b), and 70.7(a)(1)(i); 40 CFR 71.5(c)(3)(i), 71.5(b), and 71.7(a)(1)(i).

U. What ambient monitoring requirements will apply under the $PM_{2.5}$ NAAQS?

States are required to monitor $PM_{2.5}$ mass concentrations using Federal Reference Method devices to determine compliance with the NAAQS.[120] Currently, there are more than 1200 FRM monitors located across the country. States will need to maintain monitors in designated nonattainment areas in order to track progress toward attainment and ultimately determine whether the area has attained the $PM_{2.5}$ standards.

In addition to the FRM network, EPA and the States have also deployed more than 250 speciation monitoring sites around the country to sample for chemical composition of $PM_{2.5}$. The data provided from these speciation monitors are invaluable in identifying contributing source categories and developing control strategies to reach attainment. Source apportionment and other receptor modeling techniques rely on the detailed data on species, ions, and other compounds obtained from chemical analysis. Analyses of rural versus urban sites to identify which $PM_{2.5}$ components comprise the ''urban excess'' (urban minus rural levels) portion of $PM_{2.5}$ mass also rely on data from speciation monitors. The EPA encourages states to expand their data analysis efforts using the wealth of information provided from the speciation monitoring network.

IV. Statutory and Executive Order Reviews

A. Executive Order 12866: Regulatory Planning and Review

Under Executive Order 12866, [58 FR 51735 (October 4, 1993)] the Agency must determine whether the regulatory action is ''significant'' and therefore subject to OMB review and the requirements of the Executive Order. The Order defines ''significant regulatory action'' as one that is likely to result in a rule that may:

(1) Have an annual effect on the economy of $100 million or more or adversely affect in a material way the economy, a sector of the economy, productivity, competition, jobs, the environment, public health or safety, or State, local, or tribal governments or communities;

(2) Create a serious inconsistency or otherwise interfere with an action taken or planned by another agency;

(3) Materially alter the budgetary impact of entitlements, grants, user fees, or loan programs or the rights and obligations of recipients thereof; or

(4) Raise novel legal or policy issues arising out of legal mandates, the President's priorities, or the principles set forth in the Executive Order.

Under the terms of Executive Order 12866, it has been determined that this rule is a ''significant regulatory action.'' As such, this action was submitted to OMB for EO 12866 review. Changes made in response to OMB suggestions or recommendations will be documented in the public record.

B. Paperwork Reduction Act

The information collection requirements in this rule will be submitted for approval to OMB under the Paperwork Reduction Act, 44 U.S.C. 3501 *et seq.* The information collection requirements are not enforceable until OMB approves them other than to the extent required by statute.

This rule provides the framework for the States to develop SIPs to achieve a new or revised NAAQS. This framework reflects the requirements prescribed in CAA sections 110 and part D, subpart 1 of title I. In that sense, the present final rule does not establish any new information collection burden on States. Had this rule not been developed, States would still have the legal obligation under law to submit nonattainment area SIPs under part D of title I of the CAA within specified periods after their nonattainment designation for the $PM_{2.5}$ standards, and the SIPs would have to meet the requirements of part D.

A SIP contains rules and other requirements designed to achieve the NAAQS by the deadlines established under the CAA, and also contains a demonstration that the State's requirements will in fact result in attainment. The SIP must meet the CAA requirements in subpart 1 to adopt RACM, RACT, and provide for RFP toward attainment for the period prior to the area's attainment date. After a State submits a SIP, the CAA requires EPA to approve or disapprove the SIP. If EPA approves the SIP, the rules in the SIP become federally enforceable. If EPA disapproves the SIP (or if EPA finds that a State fails to submit a SIP), the CAA requires EPA to impose sanctions (2:1 offsets for major new or modified sources and restrictions on Federal highway funding) within specified timeframes; additionally, EPA must prepare and publish a SIP within 2 years after a disapproval or finding of failure to submit. The SIP must be publicly available. States must maintain confidentiality of confidential business information, however, if used to support SIP analyses. The SIP is a one-time submission, although the CAA requires States to revise their SIPs if EPA requests a revision upon a finding that the SIP is inadequate to attain or maintain the NAAQS. The State may revise its SIP voluntarily as needed, but in doing so must demonstrate that any revision will not interfere with attainment or RFP or any other applicable requirement under the CAA (see section 110(l)).

This rule does not establish requirements that directly affect the general public and the public and private sectors, but, rather, interprets the statutory requirements that apply to States in preparing their SIPs. The SIPs themselves will likely establish requirements that directly affect the general public, and the public and private sectors.

The EPA has not yet projected cost and hour burden for the statutory SIP development obligation but has started that effort and will shortly prepare an Information Collection Request (ICR) request. However, EPA did estimate administrative costs at the time of promulgation of the $PM_{2.5}$ standards in 1997. See Chapter 10 of U.S. EPA 1997, Regulatory Impact Analyses for the Particulate Matter and Ozone National Ambient Air Quality Standards, Innovative Strategies and Economics Group, Office of Air Quality Planning and Standards, Research Triangle Park, N.C., July 16, 1997. Assessments of some of the administrative cost categories identified as a part of the SIP for the $PM_{2.5}$ standards have already been conducted as a result of other provisions of the CAA and associated ICRs (e.g., emission inventory preparation, air quality monitoring program, conformity assessments, NSR, I/M program).

The burden estimates in the ICR for this rule are incremental to what is required under other provisions of the CAA. Burden means the total time, effort, or financial resources expended by persons to generate, maintain, retain, or disclose or provide information to or for a Federal agency. This includes the time needed to review instructions; develop, acquire, install, and utilize technology and systems for the purposes of collecting, validating, and verifying information, processing and maintaining information, and disclosing and providing information; adjust the existing ways to comply with any previously applicable instructions and requirements; train personnel to be able to respond to a collection of information; search data sources; complete and review the collection of information; and transmit or otherwise disclose the information.

[120] The $PM_{2.5}$ monitoring regulations are located at 40 CFR Part 58.

An agency may not conduct or sponsor, and a person is not required to respond to a collection of information unless it displays a currently valid OMB control number. The OMB control numbers for EPA's regulations in 40 CFR are listed in 40 CFR part 9. When this ICR is approved by OMB, the Agency will publish a technical amendment to 40 CFR part 9 in the **Federal Register** to display the OMB control number for the approved information collection requirements contained in this final rule. However, the failure to have an approved ICR for this rule does not affect the statutory obligation for the States to submit SIPs as required under part D of the CAA.

The information collection requirements associated with NSR permitting for ozone are covered by EPA's request to renew the approval of the ICR for the NSR program, ICR 1230.17, which was approved by OMB on January 25, 2005. The information collection requirements associated with NSR permitting were previously covered by ICR 1230.10 and 1230.11. The OMB previously approved the information collection requirements contained in the existing NSR regulations at 40 CFR parts 51 and 52 under the provisions of the Paperwork Reduction Act, and assigned OMB control number 2060–0003. A copy of the approved ICR may be obtained from Susan Auby, Collection Strategies Division; U.S. Environmental Protection Agency (2822T); 1200 Pennsylvania Ave., NW., Washington, DC 20460 or by calling (202) 566–1672.

C. Regulatory Flexibility Act

The Regulatory Flexibility Act generally requires an Agency to prepare a regulatory flexibility analysis of any rule subject to notice and comment rulemaking requirements under the Administrative Procedures Act or any other statute unless the Agency certifies the rule will not have a significant economic impact on a substantial number of small entities. Small entities include small businesses, small organizations, and small governmental jurisdictions.

For purposes of assessing the impacts of today's proposed rule on small entities, small entity is defined as: (1) A small business that is a small industrial entity as defined in the U.S. Small Business Administration (SBA) size standards. (See 13 CFR part 121); (2) a governmental jurisdiction that is a government of a city, county, town, school district or special district with a population of less than 50,000; and (3) a small organization that is any not-for-profit enterprise which is independently owned and operated and is not dominant in its field.

After considering the economic impacts of today's proposed rule on small entities, I certify that this action will not have a significant economic impact on a substantial number of small entities. The proposed rule governing SIPs will not directly impose any requirements on small entities. Rather, this rule interprets the obligations established in the CAA for States to submit implementation plans in order to attain the $PM_{2.5}$ NAAQS.

Additionally, with respect to NSR, this proposed rule does not itself create the obligation to obtain an NSR permit for new major stationary sources and modifications resulting in emissions of $PM_{2.5}$ and its precursors. Rather, the preexisting rules establish this obligation, and this proposed rule clarifies how that obligation will be implemented.

We believe that the existing Regulatory Flexibility Screening Analysis (RFASA) further supports the conclusion that the NSR proposal will not have a significant economic impact on a substantial number of small entities. The RFASA, developed as part of a 1994 draft Regulatory Impact Analysis (RIA) and incorporated into the September 1995 ICR renewal analysis, showed that the changes to the NSR program due to the 1990 CAA Amendments would not have an adverse impact on small entities. This analysis encompassed the entire universe of applicable major sources that were likely to also be small businesses (approximately 50 ''small business'' major sources). Because the administrative burden of the NSR program is the primary source of the NSR program's regulatory costs, the analysis estimated a negligible ''cost to sales'' (regulatory cost divided by the business category mean revenue) ratio for this source group. Currently, there is no economic basis for a different conclusion. We do not believe the number of ''small business'' major sources will increase appreciably because all sources who are major for $PM_{2.5}$ or one of its precursors (SO_2, NO_X, or VOC) will already be major for PM_{10} or such precursor. We continue to be interested in the potential impacts of the proposed rule on small entities and welcome comments on issues related to such impacts.

D. Unfunded Mandates Reform Act

Title II of the Unfunded Mandates Reform Act of 1995 (UMRA), Public Law 104–4, establishes requirements for Federal agencies to assess the effects of their regulatory actions on State, local, and Tribal governments and the private sector. Under section 202 of the UMRA, EPA generally must prepare a written statement, including a cost-benefit analysis, for proposed and final rules with ''Federal mandates'' that may result in expenditures to State, local, and tribal governments, in the aggregate, or to the private sector, of $100 million or more in any 1 year. Before promulgating an EPA rule for which a written statement is needed, section 205 of the UMRA generally requires EPA to identify and consider a reasonable number of regulatory alternatives and adopt the least costly, most cost-effective or least burdensome alternative that achieves the objectives of the rule. The provisions of section 205 do not apply when they are inconsistent with applicable law. Moreover, section 205 allows EPA to adopt an alternative other than the least costly, most cost-effective or least burdensome alternative if the Administrator publishes with the final rule an explanation why that alternative was not adopted. Before EPA establishes any regulatory requirements that may significantly or uniquely affect small governments, including Tribal governments, it must have developed under section 203 of the UMRA a small government agency plan. The plan must provide for notifying potentially affected small governments, enabling officials of affected small governments to have meaningful and timely input in the development of EPA regulatory proposals with significant Federal intergovernmental mandates, and informing, educating, and advising small governments on compliance with the regulatory requirements.

The EPA has determined that this rule does not contain a Federal mandate that may result in expenditures of $100 million or more for State, local, and Tribal governments, in the aggregate, or the private sector in any 1 year. The estimated administrative burden hour and costs associated with implementing the $PM_{2.5}$ NAAQS were developed upon promulgation of the standard and presented in Chapter 10 of U.S. EPA 1997, Regulatory Impact Analyses for the Particulate Matter and Ozone National Ambient Air Quality Standards, Innovative Strategies and Economics Group, Office of Air Quality Planning and Standards, Research Triangle Park, N.C., July 16, 1997. The estimated costs presented there for States in 1990 dollars totaled $0.9 million. The corresponding estimate in 1997 dollars is $1.1 million. Thus, today's rule is not subject to the requirements of section 202 and 205 of the UMRA.

The CAA imposes the obligation for States to submit SIPs to implement the $PM_{2.5}$ NAAQS. In this rule, EPA is merely providing an interpretation of those requirements. However, even if this rule did establish an independent requirement for States to submit SIPs, it is questionable whether a requirement to submit a SIP revision would constitute a Federal mandate in any case. The obligation for a State to submit a SIP that arises out of section 110 and section 172 (part D) of the CAA is not legally enforceable by a court of law, and at most is a condition for continued receipt of highway funds. Therefore, it is possible to view an action requiring such a submittal as not creating any enforceable duty within the meaning of section 421(5)(9a)(I) of UMRA (2 U.S.C. 658(a)(I)). Even if it did, the duty could be viewed as falling within the exception for a condition of Federal assistance under section 421(5)(a)(i)(I) of UMRA (2 U.S.C. 658(5)(a)(i)(I)).

In the proposal, EPA has determined that this proposed rule contains no regulatory requirements that may significantly or uniquely affect small governments, including Tribal governments. Nonetheless, EPA carried out consultations with governmental entities affected by this rule.

E. Executive Order 13132: Federalism

Executive Order 13132, entitled ''Federalism'' (64 FR 43255, August 10, 1999), requires EPA to develop an accountable process to ensure ''meaningful and timely input by State and local officials in the development of regulatory policies that have federalism implications.'' ''Policies that have federalism implications'' is defined in the Executive Order to include regulations that have ''substantial direct effects on the States, on the relationship between the national government and the States, or on the distribution of power and responsibilities among the various levels of government.''

This proposed rule does not have federalism implications. It will not have substantial direct effects on the States, on the relationship between the national government and the States, or on the distribution of power and responsibilities among the various levels of government, as specified in Executive Order 13132. As described in section D, above (on UMRA), EPA previously determined the costs to States to implement the $PM_{2.5}$ NAAQS to be approximately $0.9 million in 1990 dollars. The corresponding estimate in 1997 dollars is $1.1 million. While this proposed rule considers options not addressed at the time the NAAQS were promulgated, the costs for implementation under these options would rise only marginally. This rule clarifies the statutory obligations of States in implementing the $PM_{2.5}$ NAAQS. Finally, the CAA establishes the scheme whereby States take the lead in developing plans to meet the NAAQS. This proposed rule would not modify the relationship of the States and EPA for purposes of developing programs to implement the NAAQS. Thus, Executive Order 13132 does not apply to this proposed rule.

Although section 6 of Executive Order 13132 does not apply to this rule, EPA actively engaged the States in the development of this proposed rule. The EPA held a number of calls with representatives of State and local air pollution control agencies.

In the spirit of Executive Order 13132, and consistent with EPA policy to promote communications between EPA and State and local governments, EPA specifically solicits comment on this proposed rule from State and local officials.

F. Executive Order 13175: Consultation and Coordination With Indian Tribal Governments

Executive Order 13175, entitled ''Consultation and Coordination with Indian Tribal Governments'' (65 FR 67249, November 9, 2000), requires EPA to develop an accountable process to ensure ''meaningful and timely input by Tribal officials in the development of regulatory policies that have Tribal implications.'' This proposed rule does not have ''Tribal implications'' as defined in Executive Order 13175. This rule concerns the requirements for state and tribal implementation plans for attaining the $PM_{2.5}$ air quality standards. The CAA provides for States to develop plans to regulate emissions of air pollutants within their jurisdictions. The Tribal Air Rule (TAR) under the CAA gives Tribes the opportunity to develop and implement CAA programs such as programs to attain and maintain the $PM_{2.5}$ NAAQS, but it leaves to the discretion of the Tribe the decision of whether to develop these programs and which programs, or appropriate elements of a program, they will adopt.

This proposed rule does not have Tribal implications as defined by Executive Order 13175. It does not have a substantial direct effect on one or more Indian Tribes, since no Tribe has implemented a CAA program to attain the $PM_{2.5}$ NAAQS at this time. EPA notes that even if a Tribe were implementing such a plan at this time, while the rule might have Tribal implications with respect to that Tribe, it would not impose substantial direct costs upon it, nor would it preempt Tribal law.

Furthermore, this rule does not affect the relationship or distribution of power and responsibilities between the Federal government and Indian Tribes. The CAA and the TAR establish the relationship of the Federal government and Tribes in developing plans to attain the NAAQS, and this rule does nothing to modify that relationship. As this rule does not have Tribal implications, Executive Order 13175 does not apply.

Although Executive Order 13175 does not apply to this rule, EPA did reach out to Tribal leaders and environmental staff regarding this proposal. The EPA supports a national ''Tribal Designations and Implementation Work Group'' which provides an open forum for all Tribes to voice concerns to EPA about the designations and implementation process for the NAAQS, including the $PM_{2.5}$ NAAQS. In conference calls EPA briefed Work Group participants and Tribal environmental professionals gave input as the rule was under development. Furthermore, EPA is sending individualized letters to all federally recognized Tribes about this proposal to give Tribal leaders the opportunity for consultation. EPA specifically solicits additional comment on this proposed rule from tribal officials.

G. Executive Order 13045: Protection of Children From Environmental Health and Safety Risks

Executive Order 13045: ''Protection of Children From Environmental Health and Safety Risks'' (62 FR 19885, April 23, 1997) applies to any rule that (1) is determined to be ''economically significant'' as defined under Executive Order 12866, and (2) concerns an environmental health or safety risk that EPA has reason to believe may have disproportionate effect on children. If the regulatory action meets both criteria, the Agency must evaluate the environmental health or safety effects of the planned rule on children, and explain why the planned regulation is preferable to other potentially effective and reasonably feasible alternatives considered by the Agency.

The proposed rule is not subject to Executive Order 13045. Nonetheless, we have evaluated the environmental health or safety effects of the $PM_{2.5}$ NAAQS on children. The results of this evaluation are contained in the 1997 **Federal Register** notice establishing the $PM_{2.5}$ standards.[121] In a number of

[121] See 62 FR 38652–38760, National Ambient Air Quality Standards for Particulate Matter, Final Rule; also 40 CFR Part 50.

locations in that notice, children are identified as one of the principle sub-populations that are particularly sensitive to exposure to fine particle pollution. Today's proposed rule provides the framework by which States will require sources to reduce pollutant emissions, thereby improving air quality and reducing the exposure of children and others to unhealthy levels of fine particle pollution.

H. Executive Order 13211: Actions That Significantly Affect Energy Supply, Distribution, or Use

This proposed rule is not a ''significant energy action'' as defined in Executive Order 13211, ''Actions That Significantly Affect Energy Supply, Distribution, or Use,'' (66 FR 28355, May 22, 2001) because it is not likely to have a significant adverse effect on the supply, distribution, or use of energy.

I. National Technology Transfer Advancement Act

Section 12(d) of the National Technology Transfer Advancement Act of 1995 (NTTAA), Public Law 104–113, section 12(d) (15 U.S.C. 272 note) directs EPA to use voluntary consensus standards (VCS) in its regulatory activities unless to do so would be inconsistent with applicable law or otherwise impractical. Voluntary consensus standards are technical standards (e.g., materials specifications, test methods, sampling procedures, and business practices) that are developed or adopted by VCS bodies. The NTTAA directs EPA to provide Congress, through OMB, explanations when the Agency decides not to use available and applicable VCS.

This proposed rulemaking does not involve technical standards. Therefore, EPA is not considering the use of any VCS.

The EPA will encourage the States and Tribes to consider the use of such standards, where appropriate, in the development of the implementation plans.

J. Executive Order 12898: Federal Actions To Address Environmental Justice in Minority Populations and Low-Income Populations

Executive Order 12898 requires that each Federal agency make achieving environmental justice part of its mission by identifying and addressing, as appropriate, disproportionate high and adverse human health or environmental effects of its programs, policies, and activities on minorities and low-income populations.

The EPA believes that this proposed rule should not raise any environmental justice issues. The health and environmental risks associated with ozone were considered in the establishment of the $PM_{2.5}$ NAAQS. The level is designed to be protective with an adequate margin of safety. The proposed rule provides a framework for improving environmental quality and reducing health risks for areas that may be designated nonattainment.

Dated: September 8, 2005.

Stephen L. Johnson,

Administrator.

For the reasons stated in the preamble, Title 40, Chapter I of the Code of Federal Regulations is proposed to be amended as follows:

PART 51—REQUIREMENTS FOR PREPARATION, ADOPTION, AND SUBMITTAL OF IMPLEMENTATION PLANS

1. The authority citation for part 51 continues to read as follows:

Authority: 23 U.S.C. 101; 42 U.S.C. 7401–7671q.

Subpart I—Review of New Sources and Modifications

2. Section 51.165 is amended:

a. By revising paragraphs (a)(1)(x), (a)(1)(xxxvii)(B), (a)(1)(xxxvii)(C);

b. By adding paragraphs (a)(1)(xxxvii)(D) and (a)(9); and

c. By adding and reserving paragraph (a)(8) to read as follows:

§ 51.165 Permit requirements.

(a) * * *

(1) * * *

(x) Significant means in reference to a net emissions increase or the potential of a source to emit any of the following pollutants, a rate of emissions that would equal or exceed any of the following rates:

Pollutant Emission Rate

Carbon monoxide: 100 tons per year (tpy).

Nitrogen oxides: 40 tpy.

Sulfur dioxide: 40 tpy.

Ozone: 40 tpy of volatile organic compounds.

Lead: 0.6 tpy.

PM_{10}: 15 tpy.

$PM_{2.5}$: 10 tpy of $PM_{2.5}$ emissions; 40 tpy of sulfur dioxide emissions; 40 tpy of nitrogen oxide emissions when identified as a $PM_{2.5}$ precursor under paragraph (a)(1)(xxxvii)of this section.

* * * * *

(xxxvii) * * *

(B) Any pollutant for which a national ambient air quality standard has been promulgated;

(C) Any pollutant that is a constituent or precursor of a general pollutant listed under paragraphs (a)(1)(xxxvii)(A) or (B) of this section, provided that a constituent or precursor pollutant may only be regulated under NSR as part of regulation of the general pollutant. Precursors identified by the Administrator for purposes of NSR are the following:

(*1*) Volatile organic compounds and nitrogen oxides are precursors to ozone in all ozone nonattainment areas.

(*2*) Sulfur dioxide is a precursor to $PM_{2.5}$ in all $PM_{2.5}$ nonattainment areas.

(*3*) Nitrogen oxides are presumed to be precursors to $PM_{2.5}$ in all $PM_{2.5}$ nonattainment areas, unless the State demonstrates to the Administrator's satisfaction that emissions of nitrogen oxides from stationary sources in a specific area are not a significant contributor to that area's ambient $PM_{2.5}$ concentrations and the area is not in a State identified by the Administrator as a source of a $PM_{2.5}$ interstate transport problem.

(*4*) Volatile organic compounds and ammonia are presumed not to be precursors to $PM_{2.5}$ in any $PM_{2.5}$ nonattainment area, unless the State demonstrates to the Administrator's satisfaction that emissions of volatile organic compounds or ammonia from stationary sources in a specific area are a significant contributor to that area's ambient $PM_{2.5}$ concentrations; or

(D) Particulate matter ($PM_{2.5}$ and PM_{10}) includes gaseous emissions from a source or activity which condense to form particulate matter at ambient temperatures.

* * * * *

(8) [Reserved.]

(9) (i) The plan shall require that in meeting the emissions offset requirements of paragraph (a)(3) of this section, the ratio of total actual emissions reductions to the emissions increase shall be at least 1:1 unless an alternative ratio is provided for the applicable nonattainment area in paragraph (a)(9)(ii) through (a)(9)(iv) of this section.

(ii) The plan shall require that in meeting the emissions offset requirements of paragraph (a)(3) of this section for ozone nonattainment areas that are subject to subpart 2, part D, title I of the Act, the ratio of total actual emissions reductions of VOC to the emissions increase of VOC shall be as follows:

(A) In any marginal nonattainment area for ozone—at least 1.1:1;

(B) In any moderate nonattainment area for ozone—at least 1.15:1;

(C) In any serious nonattainment area for ozone—at least 1.2:1;

(D) In any severe nonattainment area for ozone—at least 1.3:1 (except that the

ratio may be at least 1.2:1 if the approved plan also requires all existing major sources in such nonattainment area to use BACT for the control of VOC); and

(E) In any extreme nonattainment area for ozone—at least 1.5:1 (except that the ratio may be at least 1.2:1 if the approved plan also requires all existing major sources in such nonattainment area to use BACT for the control of VOC); and

(iii) Notwithstanding the requirements of paragraph (a)(9)(ii) of this section for meeting the requirements of paragraph (a)(3) of this section, the ratio of total actual emissions reductions of VOC to the emissions increase of VOC shall be at least 1.15:1 for all areas within an ozone transport region that is subject to subpart 2, part D, title I of the Act, except for serious, severe, and extreme ozone nonattainment areas that are subject to subpart 2, part D, title I of the Act.

(iv) The plan shall require that in meeting the emissions offset requirements of paragraph (a)(3) of this section for ozone nonattainment areas that are subject to subpart 1, part D, title I of the Act (but are not subject to subpart 2, part D, title I of the Act, including 8-hour ozone nonattainment areas subject to 40 CFR 51.902(b)), the ratio of total actual emissions reductions of VOC to the emissions increase of VOC shall be at least 1:1.

* * * * *

3. Section 51.166 is amended:

a. By adding paragraph (a)(6)(iv).

b. By revising paragraphs (b)(23)(i), (b)(49)(i), (b)(49)(iii), (i)(5)(ii), and (i)(5)(iii);

c. By adding and reserving paragraph (b)(49)(v); and

d. By adding paragraphs (b)(49)(vi) to read as follows:

§ 51.166 Prevention of significant deterioration of air quality.

(a) * * *

(6) * * *

(iv) When an implementation plan must be amended to address the prevention of significant deterioration of air quality for the $PM_{2.5}$ national ambient air quality standards, the PM_{10} implementation plan provisions approved pursuant to this section may be used to implement a $PM_{2.5}$ program until such amendments are approved, provided that: Particulate matter emissions shall include gaseous emissions from a source or activity which condense to form particulate matter at ambient temperatures for purposes of determining applicability of prevention of significant deterioration requirements; and the air quality analysis required under paragraph (m) of this section shall be conducted with respect to the $PM_{2.5}$ standards.

* * * * *

(b) * * *

(23) (i) Significant means, in reference to a net emissions increase or the potential of a source to emit any of the following pollutants, a rate of emissions that would equal or exceed any of the following rates:

Pollutant and Emissions Rate

Carbon monoxide: 100 tons per year (tpy).

Nitrogen oxides: 40 tpy.

Sulfur dioxide: 40 tpy.

Particulate matter: 25 tpy of particulate matter emissions. 15 tpy of PM_{10} emissions.

$PM_{2.5}$: 10 tpy of $PM_{2.5}$ emissions; 40 tpy of sulfur dioxide emissions; 40 tpy of nitrogen oxide emissions when identified as a $PM_{2.5}$ precursor under paragraph (b)(49).

Ozone: 40 tpy of volatile organic compounds.

Lead: 0.6 tpy.

Fluorides: 3 tpy.

Sulfuric acid mist: 7 tpy.

Hydrogen sulfide (H2 S): 10 tpy.

Total reduced sulfur (including H2 S): 10 tpy.

Reduced sulfur compounds (including H2 S): 10 tpy.

Municipal waste combustor organics (measured as total tetra-through octa-chlorinated dibenzo-p-dioxins and dibenzofurans): $3.2 \times 10–6$ megagrams per year ($3.5 \times 10–6$ tons per year).

Municipal waste combustor metals (measured as articulate matter): 14 megagrams per year (15 tons per year) Municipal waste combustor acid gases (measured as sulfur dioxide and hydrogen chloride): 36 megagrams per year (40 tons per year) Municipal solid waste landfill emissions (measured as nonmethane organic compounds): 45 megagrams per year (50 tons per year).

* * * * *

(49) Regulated NSR pollutant, for purposes of this section, means the following:

(i) Any pollutant for which a national ambient air quality standard has been promulgated and any constituents or precursors to such pollutants. Precursors identified by the Administrator for purposes of NSR are the following:

(A) Volatile organic compounds and nitrogen oxides are precursors to ozone in all attainment and unclassifiable areas.

(B) Sulfur dioxide is a precursor to $PM_{2.5}$ in all attainment and unclassifiable areas.

(C) Nitrogen oxides are presumed precursors to $PM_{2.5}$ in all attainment and unclassifiable areas, unless the State demonstrates to the Administrator's satisfaction that emissions of nitrogen oxides from stationary sources in a specific area are not a significant contributor to that area's ambient $PM_{2.5}$ concentrations and the area is not in a State identified by the Administrator as a source of a $PM_{2.5}$ interstate transport problem.

(D) Volatile organic compounds are presumed not to be precursors to $PM_{2.5}$ in any attainment or unclassifiable area, unless the State demonstrates to the Administrator's satisfaction that emissions of volatile organic compounds from stationary sources in a specific area are a significant contributor to that area's ambient $PM_{2.5}$ concentrations.

* * * * *

(iii) Any Class I or II substance subject to a standard promulgated under or established by title VI of the Act;

* * * * *

(v) [Reserved.];

(vi) Particulate matter ($PM_{2.5}$ and PM_{10}) emissions include gaseous emissions from a source or activity which condense to form particulate matter at ambient temperatures.

* * * * *

(i) * * *

(5) * * *

(ii) The concentrations of the pollutant in the area that the source or modification would affect are less than the concentrations listed in paragraph (i)(5)(i) of this section; or

(iii) The pollutant is not listed in paragraph (i)(5)(i) of this section.

* * * * *

5. A new Subpart Y is added to read as follows:

Subpart Y—Provisions for Implementation of $PM_{2.5}$ National Ambient Air Quality Standards

Sec.

51.1000 Definitions.
51.1001 Applicability of part 51.
51.1002 Submittal of State implementation plan.
51.1003 Classifications.
51.1004 Attainment dates.
51.1005 One-year extensions of the attainment date.
51.1006 Redesignation to nonattainment following initial designations for the $PM_{2.5}$ NAAQS.
51.1007 Attainment demonstration and modeling requirements.
51.1008 Emission inventory requirements for the $PM_{2.5}$ NAAQS.
51.1009 Reasonable further progress (RFP) requirements.
51.1010 Requirements for reasonably available control technology (RACT) and

reasonably available control measures (RACM).

Subpart Y—Provisions for Implementation of $PM_{2.5}$ National Ambient Air Quality Standards

§ 51.1000 Definitions.

The following definitions apply for purposes of this subpart. Any term not defined herein shall have the meaning as defined in 40 CFR 51.100.

(a) Act means the Clean Air Act as codified at 42 U.S.C. 7401–7671q. (2003).

(b) Attainment year means the final year of the three consecutive years evaluated to determine attainment with the $PM_{2.5}$ NAAQS.

(c) Benchmark RFP plan means the reasonable further progress plan that requires generally linear emission reductions from the 2002 baseline emissions year through the emissions year preceding the RFP milestone.

(d) Date of designation means the effective date of the $PM_{2.5}$ area designation as promulgated by the Administrator.

(e) Direct $PM_{2.5}$ emissions means air pollutant emissions of direct fine particulate matter, including organic carbon, elemental carbon, direct sulfate, direct nitrate, and miscellaneous inorganic material (*i.e.* crustal material).

(f) Existing control measure means any federally enforceable national, State, or local control measure that has been approved in the SIP and that results in reductions in emissions of $PM_{2.5}$ and its precursors in a nonattainment area.

(g) $PM_{2.5}$ NAAQS means the particulate matter national ambient air quality standards (annual and 24-hour) codified at 40 CFR 50.7.

(h) $PM_{2.5}$ design value for a nonattainment area is the highest of the three-year average concentrations calculated for the monitors in the area, in accordance with 40 CFR part 50, appendix N.

(i) $PM_{2.5}$ direct emissions means solid particles emitted directly from an emissions source or activity, or gaseous emissions or liquid droplets from a source or activity which condense to form particulate matter at ambient temperatures. $PM_{2.5}$ direct emissions include elemental carbon, directly emitted organic carbon, and inorganic particles (including but not limited to crustal material, metals, and sea salt).

(j) $PM_{2.5}$ nonattainment plan precursor means those $PM_{2.5}$ precursors emitted by sources in the State which the State must evaluate for emission reduction measures.

(k) $PM_{2.5}$ precursor means those regulated air pollutants other than $PM_{2.5}$ direct emissions that contribute to the formation of $PM_{2.5}$. $PM_{2.5}$ precursors include SO_2, NO_X, volatile organic compounds, and ammonia.

(l) Reasonable further progress (RFP) means the incremental emissions reductions toward attainment required under section 172(c)(2) and section 171(1).

(m) Subpart 1 means subpart 1 of part D of title I of the Act.

§ 51.1001 Applicability of Part 51.

The provisions in subparts A-X of part 51 apply to areas for purposes of the $PM_{2.5}$ NAAQS to the extent they are not inconsistent with the provisions of this subpart.

§ 51.1002 Submittal of State Implementation Plan.

(a) For any area designated by EPA as nonattainment for the $PM_{2.5}$ NAAQS, the State shall submit a State implementation plan satisfying the requirements of section 172 of the Act and this subpart Y of 40 CFR part 51 to EPA no later than 3 years from the effective date of the designation.

(b) The State must submit a plan consistent with the requirements of section 110(a)(2) of the Act unless the State already has fulfilled this obligation for the purposes of implementing the $PM_{2.5}$ NAAQS.

(c) Precursors of fine particles. The state implementation plan must identify and evaluate sources of $PM_{2.5}$ direct emissions and $PM_{2.5}$ nonattainment plan precursors in accordance with §§ 51.1009 and 51.1010 of this subpart.

(1) The State must address sulfur dioxide as a $PM_{2.5}$ nonattainment plan precursor and evaluate SO_2 emissions sources for control measures.

(2) The State must address NO_X as a $PM_{2.5}$ nonattainment plan precursor and evaluate sources of NO_X emissions sources for control measures, unless the State and EPA provide an appropriate technical demonstration for a specific area showing that NO_X emissions do not significantly contribute to the $PM_{2.5}$ nonattainment problem in the area or to other downwind air quality concerns.

(3) The State is not required to address VOC as a $PM_{2.5}$ nonattainment plan precursor and evaluate sources of VOC emissions for control measures in that area, unless:

(i) The State provides an appropriate technical demonstration for a specific area showing that VOC emissions significantly contribute to the $PM_{2.5}$ nonattainment problem in the area or to other downwind air quality concerns and such demonstration is approved by EPA, or

(ii) EPA provides such a technical demonstration.

(4) The State is not required to address ammonia as a $PM_{2.5}$ nonattainment plan precursor and evaluate sources of ammonia emissions for control measures in that area, unless:

(i) the State provides an appropriate technical demonstration for a specific area showing that ammonia emissions significantly contribute to the $PM_{2.5}$ nonattainment problem in the area or to other downwind air quality concerns and such demonstration is approved by EPA, or

(ii) EPA provides such a technical demonstration.

(5) Any technical demonstration referred to in paragraphs (c)(1) through (c)(4) of this section to modify the presumptive approach for any $PM_{2.5}$ precursor must be considered in future SIP development activities.

§ 51.1003. Classifications.

An area designated as nonattainment for the $PM_{2.5}$ NAAQS will not receive a specific classification based on design value.

§ 51.1004 Attainment dates.

(a) Consistent with section 172(a)(2)(A) of the Act, the attainment date for an area designated nonattainment for the $PM_{2.5}$ NAAQS shall be the date by which attainment can be achieved as expeditiously as practicable. The attainment date presumptively shall be 5 years or less from the date of designations. The Administrator may approve an attainment date extension pursuant to section 172(a)(2)(A).

(b) In the SIP submittal for each of its nonattainment areas, the State shall submit an attainment demonstration providing detailed information justifying its proposed attainment date. For each nonattainment area, the Administrator will approve an attainment date at the same time the Administrator approves the attainment demonstration for the area, consistent with the attainment date timing provision of section 172(a)(2)(A) and paragraph (a) of this section.

§ 51.1005 One-year extensions of the attainment date.

(a) Pursuant to section 172(a)(2)(C)(ii) of the Act, a State with an area that fails to attain the $PM_{2.5}$ NAAQS by its attainment date may apply for an initial 1-year attainment date extension if the State has complied with all requirements and commitments pertaining to the area in the applicable implementation plan, and:

(1) For an area that violates the annual $PM_{2.5}$ NAAQS as of its attainment date, the annual average concentration for the

most recent year at each monitor is 15.0 μg/m³ or less (calculated according to the data analysis requirements in 40 CFR part 50, appendix N).

(2) For an area that violates the 24-hour $PM_{2.5}$ NAAQS as of its attainment date, the 98th percentile concentration for the most recent year at each monitor is 65 μg/m³ or less (calculated according to the data analysis requirements in 40 CFR part 50, appendix N).

(b) An area that fails to attain the $PM_{2.5}$ NAAQS after receiving a 1-year attainment date extension may apply for a second 1-year attainment date extension pursuant to section 172(a)(2)(C)(ii) if the State has complied with all requirements and commitments pertaining to the area in the applicable implementation plan, and:

(1) For an area that violates the annual $PM_{2.5}$ NAAQS as of its attainment date, the annual average concentration at each monitor, averaged over both the original attainment year and the first extension year, is 15.0 μg/m³ or less (calculated according to the data analysis requirements in 40 CFR part 50, appendix N).

(2) For an area that violates the 24-hour $PM_{2.5}$ NAAQS as of its attainment date, the 98th percentile concentration at each monitor, averaged over both the original attainment year and the first extension year, is 65 μg/m³ or less (calculated according to the data analysis requirements in 40 CFR part 50, appendix N).

§ 51.1006 Redesignation to nonattainment following initial designations for the $PM_{2.5}$ NAAQS.

Any area that is initially designated ''attainment/unclassifiable'' for the $PM_{2.5}$ NAAQS may be subsequently redesignated to nonattainment if ambient air quality data in future years indicate that such a redesignation is appropriate. For any area that is redesignated to nonattainment for the $PM_{2.5}$ NAAQS, any absolute, fixed date that is applicable in connection with the requirements of this part is extended by a period of time equal to the length of time between the effective date of the initial designation for the $PM_{2.5}$ NAAQS and the effective date of redesignation, except as otherwise provided in this subpart.

§ 51.1007 Attainment demonstration and modeling requirements.

(a) For any area designated as nonattainment for the $PM_{2.5}$ NAAQS, the State must submit an attainment demonstration showing that the area will attain the annual and 24-hour standards as expeditiously as practicable. The demonstration must include modeling results, inventory data, and emission reduction analyses on which the State has based its projected attainment date. Such modeling must be consistent with EPA guidance and must be appropriate for the area. The modeled strategies must be consistent with requirements in § 51.1009 for RFP and in § 51.1010 for RACT and RACM. The attainment demonstration and supporting air quality modeling must be consistent with Appendix W of this part and EPA's most recent modeling guidance in effect at the time the modeled attainment demonstration is performed.

(b) Required timeframe for obtaining emissions reductions. For each nonattainment area, the State implementation plan must provide for implementation of all control measures needed for attainment as expeditiously as practicable, but no later than the beginning of the year prior to the attainment date. Consistent with section 172(c)(1) of the Act, the plan must provide for implementation of all RACM and RACT as expeditiously as practicable. The plan also must include RFP milestones in accordance with § 51.1009, and control measures needed to meet these milestones, as necessary.

§ 51.1008 Emission inventory requirements for the $PM_{2.5}$ NAAQS.

(a) For purposes of meeting the emission inventory requirements of section 172(c)(3) of the Act, the State shall:

(1) Submit to EPA statewide emission inventories for $PM_{2.5}$ and its precursors under the Consolidated Emissions Reporting Rule (CERR), 40 CFR part 51, subpart A.

(2) Submit any additional emission inventory information needed to support an attainment demonstration and RFP plan ensuring expeditious attainment of the annual and 24-hour $PM_{2.5}$ standards.

(b) A baseline emission inventory is required for the attainment demonstration required under § 51.1007 and for meeting RFP requirements under § 51.1009. As determined on the effective date of an area's nonattainment designation, the base year for this inventory shall be the most recent calendar year for which a complete inventory was required to be submitted to EPA pursuant to the Consolidated Emissions Reporting Rule in subpart A of this part. The baseline emission inventory for calendar year 2002 shall be used for attainment planning and RFP plans for areas initially designated nonattainment for the $PM_{2.5}$ NAAQS.

§ 51.1009 Reasonable further progress (RFP) requirements.

(a) Consistent with section 172(c)(2) of the Act, State implementation plans for areas designated nonattainment for the $PM_{2.5}$ NAAQS must demonstrate reasonable further progress as defined in section 171(1).

(b) Requirements for RFP plans.

(1) If the State submits an attainment plan for an area which proposes to attain the PM NAAQS within five years of the date of designation and such plan is approved by EPA, then compliance with the requirements of the attainment plan will be considered to also meet the requirements for achieving reasonable further progress for that area.

(2) For any area for which the State proposes an attainment date of more than five years from the date of designation (*i.e.* attainment date extension), the State must submit an RFP plan as part of its SIP submittal. The SIP submittal is due to EPA within three years of the date of designation.

(3) The RFP plan must require generally linear progress in direct $PM_{2.5}$ and $PM_{2.5}$ nonattainment plan precursor emission reductions from the 2002 base year through the year preceding the attainment date. For any area seeking an attainment date extension, the RFP plan must include RFP emission reduction milestones and projected air quality improvement to be achieved prior to January 1, 2010. Any area seeking an attainment date extension of three years or more must also include in its plan RFP emission reduction milestones and projected air quality improvement to be achieved prior to January 1, 2013. The State should develop these emission reduction milestones from attainment year modeling analyses and the projected direct $PM_{2.5}$ and $PM_{2.5}$ nonattainment plan precursor emission reduction levels presented in the analyses.

(4) In its RFP plan, the State must define the geographic area to be covered by the inventories for each pollutant addressed in the plan. For each pollutant, this area shall reflect the area for which the emissions of that pollutant best corresponds with concentrations of the associated ambient species in the nonattainment area, based on information developed during attainment planning. In no case shall the area be less than the nonattainment area. All emissions sources that the State intends to track for RFP purposes must be included in the 2002 baseline inventory.

(5) For any area seeking an attainment date extension beyond five years from designation, the benchmark RFP plan due with the area's attainment

demonstration shall include emission reduction milestones to be achieved by January 1, 2010 and January 1, 2013, if applicable. The following dates are defined for purposes of the benchmark RFP plan:

(i) The baseline year for the benchmark RFP plan is the 2002 emissions year.

(ii) The milestone date inventory is the emission inventory for the year prior to the January 1 milestone date.

(iii) The full implementation emission inventory is the emission inventory for the year preceding the attainment date.

(6) The plan shall address each emitted pollutant that is reduced or otherwise affected by the control strategy of the $PM_{2.5}$ attainment plan.

(7) For each pollutant addressed pursuant to paragraph (b)(6) of this section, an overall tonnage reduction shall be calculated by subtracting the full implementation emission inventory from the baseline year inventory.

(8) The ''milestone date fraction'' is the ratio of the number of years from the baseline year to the milestone inventory year divided by the number of years from the baseline year to the full implementation year.

(9) For each pollutant addressed pursuant to paragraph (b)(6) of this section, a benchmark tonnage emission reduction shall be calculated by multiplying the full strategy tonnage reduction pursuant to paragraph (b)(7) of this section times the milestone date fraction pursuant to paragraph (b)(8) of this section. The benchmark emission level for each pollutant as of the milestone date shall be determined by subtracting the benchmark tonnage emission reduction from the baseline year emission level. A benchmark RFP plan is defined as a plan that achieves benchmark emission levels for each pollutant to be addressed pursuant to paragraph (b)(6) of this section.

(10) The RFP plan due at the time of the attainment demonstration shall provide milestones that provide for emissions levels by January 1, 2010, to be either:

(i) At levels that are roughly equivalent to the benchmark emission levels defined in paragraph (b)(8) of this section for all applicable pollutants; or

(ii) At levels included in an alternative scenario that can be shown to provide generally equivalent air quality protection as the benchmark RFP plan.

(11) The equivalence of an alternative scenario to the corresponding benchmark plan shall be determined by comparing the expected air quality benefits of the two scenarios at the design value monitor location. This comparison shall use the information developed for the attainment plan to assess the relationship between emissions reductions of the regulated pollutants and the ambient air quality improvement for the associated ambient species. The analysis of both scenarios may use the linear assumption that achievement of a given fraction of the emissions reductions of the attainment plan will achieve the same fraction of the associated air quality improvement that the attainment plan is demonstrated to achieve.

§ 51.1010 Requirements for reasonably available control technology (RACT) and reasonably available control measures (RACM).

(a) A $PM_{2.5}$ nonattainment area that provides an attainment demonstration proposing an attainment date no later than five years from the date of designation is required to conduct RACT determinations for major stationary sources and impose RACT controls only to the extent that such controls are necessary to meet RFP or attain the $PM_{2.5}$ standards as expeditiously as practicable.

(b) A $PM_{2.5}$ nonattainment area that provides an attainment demonstration proposing an attainment date of more than five years but no later than ten years from the date of designation must conduct a RACT determination for all stationary sources with the potential to emit 100 tons or more of any one pollutant associated with $PM_{2.5}$ (direct $PM_{2.5}$, SO_2, and NO_X).

(c) In any source-specific RACT determination, the State must evaluate whether emission controls, process changes, or other emission reduction measures are technically and economically feasible in accordance with this rule and appropriate guidance. The State also must consider any additional information obtained through public comments when conducting RACT determinations for $PM_{2.5}$. Any RACT emission reduction regulations required by the State must be included in the State's SIP submittal.

(d) For any source that installed controls due to a previous RACT determination for another NAAQS implementation program, the State may accept the previous RACT determination for the purposes of the $PM_{2.5}$ program, provided it submits a certification with appropriate supporting information that the previous RACT determination currently represents an appropriate level of control for the $PM_{2.5}$ program.

(e) For each $PM_{2.5}$ nonattainment area, the State shall submit with the attainment demonstration a SIP revision demonstrating that it has adopted all reasonably available control measures necessary to demonstrate attainment as expeditiously as practicable and to meet any RFP requirements. In developing its attainment demonstration, in demonstrating attainment as expeditiously as practicable, and in determining whether a particular emission reduction measure or set of measures must be adopted as RACM under section 172(c)(1) of the Act, the State must consider the cumulative impact of implementing the available measures and whether such measures taken together would advance the attainment date by one year. In conducting a RACM analysis, the State should consider control technology information available in EPA and State guidance documents, in control technology clearinghouses, and in any comments provided by the public.

5. Appendix S to Part 51 is amended:

a. By revising paragraph II. A. 10.;

c. By adding paragraph II. A. 21.; and

b. By revising paragraph IV. G. to read as follows:

Appendix S to Part 51—Emission Offset Interpretative Ruling

* * * * *

II. * * *

A. * * *

10. Significant means, in reference to a net emissions increase or the potential of a source to emit any of the following pollutants, a rate of emissions that would equal or exceed any of the following rates:

Pollutant and Emissions Rate

Carbon monoxide: 100 tons per year (tpy) .

Nitrogen oxides: 40 tpy.

Sulfur dioxide: 40 tpy.

Ozone: 40 tpy of volatile organic compounds.

Lead: 0.6 tpy.

Particulate matter: 25 tpy of particulate matter emissions.

PM_{10}: 15 tpy.

$PM_{2.5}$: 10 tpy of $PM_{2.5}$ emissions; 40 tpy of sulfur dioxide emissions; 40 tpy of nitrogen oxide emissions when identified as a $PM_{2.5}$ precursor under paragraph II. A. 21.

* * * * *

21. Regulated NSR pollutant, for purposes of this section, means the following:

(i) Nitrogen oxides or any volatile organic compounds;

(ii) Any pollutant for which a national ambient air quality standard has been promulgated;

(iii) Any pollutant that is a constituent or precursor of a general pollutant listed under paragraphs II. A.

21. (i) or (ii) of this section, provided that a constituent or precursor pollutant may only be regulated under NSR as part of regulation of the general pollutant. Precursors identified by the Administrator for purposes of NSR are the following:

(*a*) Volatile organic compounds and nitrogen oxides are precursors to ozone in all ozone nonattainment areas.

(*b*) Sulfur dioxide is a precursor to $PM_{2.5}$ in all $PM_{2.5}$ nonattainment areas.

(*c*) Nitrogen oxides are presumed to be precursors to $PM_{2.5}$ in all $PM_{2.5}$ nonattainment areas, unless the State demonstrates to the Administrator's satisfaction that emissions of nitrogen oxides from stationary sources in a specific area are not a significant contributor to that area's ambient $PM_{2.5}$ concentrations and the area is not in a State identified by the Administrator as a source of a $PM_{2.5}$ interstate transport problem.

(*d*) Volatile organic compounds and ammonia are presumed not to be precursors to $PM_{2.5}$ in any $PM_{2.5}$ nonattainment area, unless the State demonstrates to the Administrator's satisfaction that emissions of volatile organic compounds or ammonia from stationary sources in a specific area are a significant contributor to that area's ambient $PM_{2.5}$ concentrations; or

(iv) Particulate matter ($PM_{2.5}$ and PM_{10}) includes gaseous emissions from a source or activity which condense to form particulate matter at ambient temperatures.

* * * * *

IV. * * *

G. Offset Ratios.

1. In meeting the emissions offset requirements of paragraph IV. A., Condition 3 of this Ruling, the ratio of total actual emissions reductions to the emissions increase shall be at least 1:1 unless an alternative ratio is provided for the applicable nonattainment area in paragraphs IV. G. 2. to IV. G. 4.

2. In meeting the emissions offset requirements of paragraph IV. A., Condition 3 of this Ruling for ozone nonattainment areas that are subject to subpart 2, part D, title I of the Act, the ratio of total actual emissions reductions of VOC to the emissions increase of VOC shall be as follows:

(i) In any marginal nonattainment area for ozone—at least 1.1:1;

(ii) In any moderate nonattainment area for ozone—at least 1.15:1;

(iii) In any serious nonattainment area for ozone—at least 1.2:1;

(iv) In any severe nonattainment area for ozone—at least 1.3:1 (except that the ratio may be at least 1.2:1 if the State also requires all existing major sources in such nonattainment area to use BACT for the control of VOC); and

(v) In any extreme nonattainment area for ozone—at least 1.5:1 (except that the ratio may be at least 1.2:1 if the State also requires all existing major sources in such nonattainment area to use BACT for the control of VOC);

3. Notwithstanding the requirements of paragraph IV.G. 2. of this Ruling for meeting the requirements of paragraph IV. A., Condition 3 of this Ruling, the ratio of total actual emissions reductions of VOC to the emissions increase of VOC shall be at least 1.15:1 for all areas within an ozone transport region that is subject to subpart 2, part D, title I of the Act, except for serious, severe, and extreme ozone nonattainment areas that are subject to subpart 2, part D, title I of the Act.

4. In meeting the emissions offset requirements of paragraph IV. A., Condition 3 of this Ruling for ozone nonattainment areas that are subject to subpart 1, part D, title I of the Act (but are not subject to subpart 2, part D, title I of the Act, including 8-hour ozone nonattainment areas subject to 40 CFR 51.902(b)), the ratio of total actual emissions reductions of VOC to the emissions increase of VOC shall be at least 1:1.

PART 52—APPROVAL AND PROMULGATION OF IMPLEMENTATION PLANS

5. The authority citation for part 52 continues to read as follows:

Authority: 42 U.S.C. 7401 *et seq.*

6. Section 52.21 is amended by:

a. Revising paragraphs (b)(23)(i), (b)(50)(i), (b)(50)(iii), and (i)(5)(ii);

b. Adding and reserving paragraph (b)(50)(v); and

c. Adding paragraphs (b)(50)(vi) and (i)(5)(iii) to read as follows:

§ 52.21 Prevention of significant deterioration of air quality.

* * * * *

(b) * * *

(23)(i) Significant means, in reference to a net emissions increase or the potential of a source to emit any of the following pollutants, a rate of emissions that would equal or exceed any of the following rates:

Pollutant and Emissions Rate

Carbon monoxide: 100 tons per year (tpy).

Nitrogen oxides: 40 tpy.

Sulfur dioxide: 40 tpy.

Particulate matter: 25 tpy of particulate matter emissions.

PM_{10}: 15 tpy.

$PM_{2.5}$: 10 tpy of $PM_{2.5}$ emissions; 40 tpy of sulfur dioxide emissions; 40 tpy of nitrogen oxide emissions when identified as a $PM_{2.5}$ precursor under paragraph (b)(50) of this section.

Ozone: 40 tpy of volatile organic compounds.

Lead: 0.6 tpy.

Fluorides: 3 tpy.

Sulfuric acid mist: 7 tpy.

Hydrogen sulfide (H2 S): 10 tpy.

Total reduced sulfur (including H2 S): 10 tpy.

Reduced sulfur compounds (including H2 S): 10 tpy.

Municipal waste combustor organics (measured as total tetra-through octa-chlorinated dibenzo-p-dioxins and dibenzofurans): 3.2×10-6 megagrams per year (3.5×10-6 tons per year).

Municipal waste combustor metals (measured as particulate matter): 14 megagrams per year (15 tons per year).

Municipal waste combustor acid gases (measured as sulfur dioxide and hydrogen chloride): 36 megagrams per year (40 tons per year).

Municipal solid waste landfills emissions (measured as nonmethane organic compounds): 45 megagrams per year (50 tons per year).

* * * * *

(50) Regulated NSR pollutant, for purposes of this section, means the following:

(i) Any pollutant for which a national ambient air quality standard has been promulgated and any constituents or precursors for such pollutants. Precursors identified by the Administrator for purposes of NSR are the following:

(A) Volatile organic compounds and nitrogen oxides are precursors to ozone in all attainment and unclassifiable areas.

(B) Sulfur dioxide is a precursor to $PM_{2.5}$ in all attainment and unclassifiable areas.

(C) Nitrogen oxides are presumed precursors to $PM_{2.5}$ in all attainment and unclassifiable areas, unless the State demonstrates to the Administrator's satisfaction that emissions of nitrogen oxides from stationary sources in a specific area are not a significant contributor to that area's ambient $PM_{2.5}$ concentrations and the area is not in a State identified by the Administrator as a source of a $PM_{2.5}$ interstate transport problem.

(D) Volatile organic compounds are presumed not to be precursors to $PM_{2.5}$ in any attainment or unclassifiable area, unless the State demonstrates to the Administrator's satisfaction that emissions of volatile organic compounds from stationary sources in a specific area are a significant

contributor to that area's ambient $PM_{2.5}$ concentrations.

* * * * *

(iii) Any Class I or II substance subject to a standard promulgated under or established by title VI of the Act;

* * * * *

(v) [Reserved.];

(vi) Particulate matter ($PM_{2.5}$ and PM_{10}) emissions include gaseous emissions from a source or activity which condense to form particulate matter at ambient temperatures.

* * * * *

(i) * * *

(5) * * *

(ii) The concentrations of the pollutant in the area that the source or modification would affect are less than the concentrations listed in paragraph (i)(5)(i) of this section; or

(iii) The pollutant is not listed in paragraph (i)(5)(i) of this section.

* * * * *

[FR Doc. 05–20455 Filed 10–31–05; 8:45 am]

BILLING CODE 6560–50–U

Federal Register

Tuesday,
November 1, 2005

Part III

Environmental Protection Agency

40 CFR Part 312

Standards and Practices for All Appropriate Inquiries; Final Rule

ENVIRONMENTAL PROTECTION AGENCY

40 CFR Part 312

[SFUND–2004–0001; FRL–7989–7]

RIN 2050–AF04

Standards and Practices for All Appropriate Inquiries

AGENCY: Environmental Protection Agency.

ACTION: Final rule.

SUMMARY: The Environmental Protection Agency (EPA) today is establishing federal standards and practices for conducting all appropriate inquiries as required under sections 101(35)(B)(ii) and (iii) of the Comprehensive Environmental Response, Compensation, and Liability Act (CERCLA). Today's final rule establishes specific regulatory requirements and standards for conducting all appropriate inquiries into the previous ownership and uses of a property for the purposes of meeting the all appropriate inquiries provisions necessary to qualify for certain landowner liability protections under CERCLA. The standards and practices also will be applicable to persons conducting site characterization and assessments with the use of grants awarded under CERCLA section 104(k)(2)(B).

DATES: This final rule is effective November 1, 2006.

ADDRESSES: EPA established a docket for this action under Docket ID No. SFUND–2004–0001. All documents in the docket are listed in the EDOCKET index at *http://www.epa.gov/edocket*. Although listed in the index, some information is not publicly available, i.e., information labeled Confidential Business Information (CBI) or other information whose disclosure is restricted by statute. Certain other material, such as copyrighted material, is not placed on the Internet and will be publicly available only in hard copy form. Publicly available docket materials are available either electronically in EDOCKET or in hard copy at the EPA Docket Center, EPA West Building, Room B102, 1301 Constitution Ave., NW., Washington, DC. This docket facility is open from 8:30 a.m. to 4:30 p.m., Monday through Friday, excluding Federal holidays. The telephone number for the Public Reading Room is (202) 566–1744, and the telephone number for the OSWER Docket is (202) 566–0276.

FOR FURTHER INFORMATION CONTACT: For further information on specific aspects of today's rule, contact Patricia Overmeyer of EPA's Office of Brownfields Cleanup and Redevelopment at (202) 566–2774 or at *overmeyer.patricia@epa.gov*. Mail inquiries may be directed to the Office of Brownfields Cleanup and Redevelopment (5105T), 1200 Pennsylvania Ave. NW., Washington, DC 20460.

SUPPLEMENTARY INFORMATION:

I. General Information

A. Who Potentially May be Affected by Today's Rule?

This regulation may affect most directly those persons and businesses purchasing commercial property or any property that will be used for commercial or public purposes and who may, after purchasing the property, seek to claim protection from CERCLA liability for releases or threatened releases of hazardous substances. Under section101(35)(B) of CERCLA, as amended by the Small Business Liability Relief and Brownfields Revitalization Act (Pub. L. 107–118, 115 stat. 2356, ''the Brownfields Amendments'') such persons and businesses are required to conduct all appropriate inquiries prior to or on the date on which the property is acquired. Prospective landowners who do not conduct all appropriate inquiries prior to or on the date of obtaining ownership of the property may lose their ability to claim protection from CERCLA liability as an innocent landowner, bona fide prospective purchaser, or contiguous property owner.

In addition, today's rule will affect any party who receives a brownfields grant awarded under CERCLA section 104(k)(2)(B) and uses the grant money to conduct site characterization or assessment activities. This includes state, local and tribal governments that receive brownfields site assessment grants for the purpose of conducting site characterization and assessment activities. Such parties are required under CERCLA section 104(k)(2)(B)(ii) to conduct such activities in compliance with the standards and practices established by EPA for the conduct of all appropriate inquiries. EPA notes that today's rule also may affect other parties who apply for brownfields grants under the provisions of CERCLA section 104(k), since such parties may have to qualify as a bona fide prospective purchaser to ensure compliance with the statutory prohibitions on the use of grant funds under Section 104(k)(4)(B)(I). Any party seeking liability protection as a bona fide prospective purchaser, including eligible brownfields grantees, must conduct all appropriate inquiries prior to or on the date of acquiring a property.

The background document, ''Economic Impacts Analysis for the Proposed All Appropriate Inquiries Final Regulation'' and the Addendum to this document provide a comprehensive analysis of all potentially impacted entities. These documents are available in the docket established for today's rule. A summary of potentially affected businesses is provided in the table below.

Our aim in the table below is to provide a guide for readers regarding entities likely to be directly regulated or indirectly affected by today's action. This action, however, may affect other entities not listed in the table. To determine whether you or your business is regulated or affected by this action, you should examine the regulatory language amending CERCLA. This language is found at the end of this **Federal Register** notice. If you have questions regarding the applicability of this action to a particular entity, consult the person listed in the preceding section entitled **FOR FURTHER INFORMATION CONTACT.**

Industry category	NAICS code
Manufacturing	31–33
Wholesale Trade	42
Retail Trade	44–45
Finance and Insurance	52
Real Estate	531
Professional, Scientific and Technical Services	541
Accommodation and Food Services	72
Repair and Maintenance	811
Personal and Laundry Services	812
State, Local and Tribal Government	N/A

B. How Can I Get Copies of This Document and Other Related Information?

1. *Docket*. EPA established an official public docket for this action under Docket ID No. SFUND–2004–0001. The official public docket consists of the documents specifically referenced in this action, any public comments received, and other information related to today's action. Although a part of the official docket, the public docket does not include Confidential Business Information (CBI) or other information whose disclosure is restricted by statute. Documents in the official public docket are listed in the index list in EPA's electronic public docket and comment system, EDOCKET. Documents may be available either electronically or in hard copy. Electronic documents may be viewed through EDOCKET. Hard copy

documents may be viewed at the EPA Docket Center, EPA West, Room B102, 1301 Constitution Avenue, NW., Washington, DC. The EPA Docket Center Public Reading Room is open from 8:30 a.m. to 4:30 p.m., Monday through Friday, excluding Federal holidays. The telephone number for the Public Reading Room is (202) 566–1744, and the telephone number for the OSWER Docket is (202) 566–0276.

2. *Electronic Access.* You may access this **Federal Register** document electronically through the EPA Internet under the ''**Federal Register**'' listings at *http://www.epa.gov/fedrgstr.*

An electronic version of the public docket also is available through EPA's electronic public docket and comment system, EDOCKET. You may use EDOCKET at *http://www.epa.gov/edocket/* to view public comments, access the index listing of the contents of the public docket, and access those documents in the public docket that are available electronically. Once in the system, select ''search,'' then key in the appropriate docket identification number.

Certain types of information will not be placed in EDOCKET. Information claimed as CBI and other information whose disclosure is restricted by statute, which is not included in the official public docket, will not be available for public viewing in EPA's electronic public docket. EPA's policy is that copyrighted material will not be placed in EPA's electronic public docket but will be available only in printed, paper form in the official public docket. Docket materials that are not available electronically may be viewed at the docket facility identified above.

Contents of Today's Rule

I. Statutory Authority
II. Background
A. What is the Intent of Today's Rule?
B. What is ''All Appropriate Inquiries?''
C. What were the Previous Standards for All Appropriate Inquiries?
D. What are the Liability Protections Established Under the Brownfields Amendments?
E. What Criteria Did Congress Establish for the All Appropriate Inquiries Standard?
III. Summary of Comments and Changes From Proposed Rule to Final Rule
IV. Detailed Description of Today's Rule
A. What is the Purpose and Scope of the Rule?
B. To Whom is the Rule Applicable?
C. Does the Final Rule Include Any New Reporting or Disclosure Obligations?
D. What are the Final Documentation Requirements?
E. What are the Qualifications for an Environmental Professional?
F. References
G. What is Included in ''All Appropriate Inquiries?''
H. Who is Responsible for Conducting the All Appropriate Inquiries?
I. When Must All Appropriate Inquiries be Conducted?
J. Can a Prospective Landowner Use Information Collected for Previous Inquiries Completed for the Same Property?
K. Can All Appropriate Inquiries be Conducted by One Party and Transferred to Another Party?
L. What Are the Objectives and Performance Factors for the All Appropriate Inquiries Requirements?
M. What are Institutional Controls?
N. How must Data Gaps Be Addressed in the Conduct of All Appropriate Inquiries?
O. Do Small Quantities of Hazardous Substances That Do Not Pose Threats to Human Health and the Environment Have to Be Identified in the Inquiries?
P. What are the Requirements for Interviewing Past and Present Owners, Operators, and Occupants?
Q. What are the Requirements for Reviews of Historical Sources of Information?
R. What are the Requirements for Searching for Recorded Environmental Cleanup Liens?
S. What are the Requirements for Reviewing Federal, State, Tribal, and Local Government Records?
T. What are the Requirements for Visual Inspections of the Subject Property and Adjoining Properties?
U. What are the Requirements for the Inclusion of Specialized Knowledge or Experience on the Part of the ''Defendant?''
V. What are the Requirements for the Relationship of the Purchase Price to the Value of the Property, if the Property was not Contaminated?
W. What are the Requirements for Commonly Known or Reasonably Ascertainable Information about the Property?
X. What are the Requirements for ''the Degree of Obviousness of the Presence or Likely Presence of Contamination at the Property, and the Ability to Detect the Contamination by Appropriate Investigation?''
V. Statutory and Executive Order Reviews
A. Executive Order 12866: Regulatory Planning and Review
B. Paperwork Reduction Act
C. Regulatory Flexibility Act
D. Unfunded Mandates Reform Act
E. Executive Order 13132: Federalism
F. Executive Order 13175: Consultation and Coordination with Indian Tribal Governments
G. Executive Order 13045: Protection of Children from Environmental Risks and Safety Risks
H. Executive Order 13211: Actions that Significantly Affect Energy Supply, Distribution or Use
I. National Technology Transfer Advancement Act
J. Executive Order 12898: Federal Actions to Address Environmental Justice in Minority Populations and Low-Income Populations
K. Congressional Review Act

I. Statutory Authority

These regulations are promulgated under the authority of Section 101(35)(B) of the Comprehensive Environmental Response, Compensation, and Liability Act of 1980 (42 U.S.C. 9601), as amended, most importantly by the Small Business Liability Relief and Brownfields Revitalization Act.

II. Background

A. What is the Intent of Today's Rule?

On August 26, 2004, EPA published a notice of proposed rulemaking outlining proposed standards and practices for the conduct of ''all appropriate inquiries.'' This regulatory action was initiated in response to legislative amendments to the Comprehensive Environmental Response, Compensation, and Liability Act (CERCLA). On January 11, 2002, President Bush signed the Small Business Liability Relief and Brownfields Revitalization Act (Pub. L. 107–118, 115 Stat. 2356, ''the Brownfields Amendments''). The Brownfields Amendments amend CERCLA by providing funds to assess and clean up brownfields sites, clarifying CERCLA liability provisions for certain landowners, and providing funding to enhance state and tribal cleanup programs. The intent of today's rule is to finalize regulations setting federal standards and practices for the conduct of all appropriate inquiries, a key provision of the Brownfields Amendments. Subtitle B of Title II of the Brownfields Amendments revises CERCLA section 101(35), clarifying the requirements necessary to establish the innocent landowner defense. In addition, the Brownfields Amendments add protections from CERCLA liability for bona fide prospective purchasers and contiguous property owners who meet certain statutory requirements.

Each of the CERCLA liability provisions for innocent landowners, bona fide prospective purchasers, and contiguous property owners, requires that, among other requirements, persons claiming the liability protections conduct all appropriate inquiries into prior ownership and use of a property prior to or on the date a person acquires a property. The law requires EPA to develop regulations establishing standards and practices for how to conduct all appropriate inquiries. Congress included in the Brownfields Amendments a list of criteria that the Agency must address in the regulations establishing standards and practices for conducting all appropriate inquiries

section 101(35)(2)(B)(ii) and (iii). The Brownfields Amendments also require that parties receiving a federal brownfields grant awarded under CERCLA section 104(k)(2)(B) to conduct site characterizations and assessments must conduct these activities in accordance with the standards and practices for all appropriate inquiries.

The regulations established today only address the all appropriate inquiries provisions of CERCLA sections 101(35)(B)(i)(I) and 101(35)(B)(ii) and (iii). Today's rule does not address the requirements of CERCLA section 101(35)(B)(i)(II) for what constitutes ''reasonable steps.''

B. What is ''All Appropriate Inquiries?''

An essential step in real property transactions may be evaluating a property for potential environmental contamination and assessing potential liability for contamination present at the property. The process for assessing properties for the presence or potential presence of environmental contamination often is referred to as ''environmental due diligence,'' or ''environmental site assessment.'' The Comprehensive Environmental Response Compensation and Liability Act (CERCLA) or Superfund, provides for a similar, but legally distinct, process referred to as ''all appropriate inquiries.''

Under CERCLA, persons may be held strictly liable for cleaning up hazardous substances at properties that they either currently own or operate or owned or operated at the time of disposal. Strict liability in the context of CERCLA means that a potentially responsible party may be liable for environmental contamination based solely on property ownership and without regard to fault or negligence.

In 1986, the Superfund Amendments and Reauthorization Act (Pub. L. No. 99–499, 100 stat. 1613, ''SARA'') amended CERCLA by creating an ''innocent landowner'' defense to CERCLA liability. The new section 101(35)(B) of CERCLA provided a defense to CERCLA liability, for those persons who could demonstrate, among other requirements, that they ''did not know and had no reason to know'' prior to purchasing a property that any hazardous substance that is the subject of a release or threatened release was disposed of on, in, or at the property. Such persons, to demonstrate that they had ''no reason to know'' must have undertaken, prior to, or on the date of acquisition of the property, ''all appropriate inquiries'' into the previous ownership and uses of the property consistent with good commercial or customary standards and practices. The 2002 Brownfields Amendments added potential liability protections for ''contiguous property owners'' and ''bona fide prospective purchasers'' who also must demonstrate they conducted all appropriate inquiries, among other requirements, to benefit from the liability protection.

C. What Were the Previous Standards for All Appropriate Inquiries?

As part of the Brownfields Amendments to CERCLA, Congress established interim standards for the conduct of all appropriate inquiries. The federal interim standards established by Congress became effective on January 11, 2002. In the case of properties purchased after May 31, 1997, the interim standards include the procedures of the ASTM Standard E1527–97 (entitled ''Standard Practice for Environmental Site Assessments: Phase 1 Environmental Site Assessment Process''). In the case of persons who purchased property prior to May 31, 1997 and who are seeking to establish an innocent landowner defense or qualify as a contiguous property owner, CERCLA provides that such persons must establish, among other statutory requirements, that at the time they acquired the property, they did not know and had no reason to know of releases or threatened releases to the property. To establish they did not know and had no reason to know of releases or threatened releases, persons who purchased property prior to May 31, 1997 must demonstrate that they carried out all appropriate inquiries into the previous ownership and uses of the property in accordance with generally accepted good commercial and customary standards and practices.

In the case of property acquired by a non-governmental entity or non-commercial entity for residential or other similar uses, the current interim standards for all appropriate inquiries may not be applicable. For those cases, the Brownfields Amendments to CERCLA establish that a ''facility inspection and title search that reveal no basis for further investigation shall be considered to satisfy the requirements' for all appropriate inquiries. In addition, such properties are not within the scope of today's rule.

The interim standards remain in effect only until the effective date of today's rule which promulgates federal regulations establishing standards and practices for conducting all appropriate inquiries.

On May 9, 2003, EPA published a final rule (68 FR 24888) clarifying that for the purposes of achieving the all appropriate inquiries standards of CERCLA section 101(35)(B), and until the effective date of today's regulation, persons who purchase property on or after May 31, 1997 could use either the procedures provided in ASTM E1527–2000, entitled ''Standard Practice for Environmental Site Assessments: Phase I Environmental Site Assessment Process,'' or the earlier standard cited by Congress in the Brownfields Amendments, ASTM E1527–97.

Today's notice is a final rule and as such replaces the current interim standards for all appropriate inquiries established by Congress in the Brownfields Amendments and clarified by EPA in the May 9, 2003 final rule. Since the Agency is promulgating a final rule establishing federal regulations containing the standards and practices for conducting all appropriate inquiries, the interim standard will no longer be the operative standard for conducting all appropriate inquiries upon November 1, 2006, the effective date of today's rule. Until November 1, 2006, both the standards and practices included in today's final regulation and the current interim standards established by Congress for all appropriate inquiries will be recognized by EPA as satisfying the statutory requirements for the conduct of all appropriate inquiries under section 101(35)(B) of CERCLA.

D. What are the Liability Protections Established Under the Brownfields Amendments?

The Brownfields Amendments provide important liability protections for landowners who qualify as contiguous property owners, bona fide prospective purchasers, or innocent landowners. To meet the statutory requirements for any of these landowner liability protections, a landowner must meet certain threshold requirements and satisfy certain continuing obligations. To qualify as a bona fide prospective purchaser, contiguous property owner, or innocent landowner, a person must perform ''all appropriate inquiries'' on or before the date on which the person acquired the property. Bona fide prospective purchasers and contiguous property owners also must demonstrate that they are not potentially liable or affiliated with any other person that is potentially liable for response costs at the property. In the case of contiguous property owners, the landowner claiming to be a contiguous property owner also must demonstrate that he did not cause, contribute, or consent to any release or threatened release of hazardous substances. To meet the statutory requirements for a bona fide

prospective purchaser, a property owner must have acquired a property subsequent to any disposal activities involving hazardous substances at the property.

Continuing obligations required under the statute include complying with land use restrictions and not impeding the effectiveness or integrity of institutional controls; taking ''reasonable steps'' with respect to hazardous substances affecting a landowner's property to prevent releases; providing cooperation, assistance and access to EPA, a state, or other party conducting response actions or natural resource restoration at the property; complying with CERCLA information requests and administrative subpoenas; and providing legally required notices. For a more detailed discussion of these threshold and continuing requirements please see EPA, Interim Guidance Regarding Criteria Landowners Must Meet in Order to Qualify for Bona Fide Prospective Purchaser, Contiguous Property Owner, or Innocent Landowner Limitations on CERCLA Liability (Common Elements, 2003). A copy of this document is available in the docket for today's rule.

EPA notes that, as explained below, persons conducting all appropriate inquiries in compliance with today's final rule are not entitled to the CERCLA liability protections provided for innocent landowners, bona fide prospective purchasers, and contiguous property owners, unless they also comply with all of the continuing obligations established under the statute. As explained below, compliance with today's final rule is only one requirement necessary for CERCLA liability protection. We also note that the requirements of today's rule apply to prospective property owners who are seeking protection from liability under the federal Superfund Law (CERCLA). Prospective property owners wishing to establish protection from, or a defense to, liability under state superfund or other related laws must comply with the all criteria established under state laws, including any criteria for conducting site assessments or all appropriate inquiries established under applicable state statutes or regulations.

1. Bona Fide Prospective Purchaser

The Brownfields Amendments added a new bona fide prospective purchaser provision at CERCLA section 107(r). The provision provides protection from CERCLA liability, and limits EPA's recourse for unrecovered response costs to a lien on property for the lesser of the unrecovered response costs or increase in fair market value attributable to EPA's response action. To meet the statutory requirements for a bona fide prospective purchaser, a person must meet the requirements set forth in CERCLA sections 101(40) and 107(r). A bona fide prospective purchaser must have bought property after January 11, 2002 (the date of enactment of the Brownfields Amendments). A bona fide prospective purchaser may purchase property with knowledge of contamination after performing all appropriate inquiries, provided the property owner meets or complies with all of the other statutory requirements set forth in CERCLA section 101(40). Conducting all appropriate inquiries *alone* does not provide a landowner with protection against CERCLA liability. Landowners who want to qualify as bona fide prospective purchasers must comply with all of the statutory requirements. The statutory requirements include, without limitation, that the landowner must:

- Have acquired a property after all disposal of hazardous substances at the property ceased;
- Provide all legally required notices with respect to the discovery or release of any hazardous substances at the property;
- Exercise appropriate care by taking reasonable steps to stop continuing releases, prevent any threatened future release, and prevent or limit human, environmental, or natural resources exposure to any previously released hazardous substance;
- Provide full cooperation, assistance, and access to persons that are authorized to conduct response actions or natural resource restorations;
- Comply with land use restrictions established or relied on in connection with a response action;
- Not impede the effectiveness or integrity of any institutional controls;
- Comply with any CERCLA request for information or administrative subpoena; and
- Not be potentially liable, or affiliated with any other person who is potentially liable for response costs for addressing releases at the property.

Persons claiming to be bona fide prospective purchasers should keep in mind that failure to identify an environmental condition or identify a release or threatened release of a hazardous substance on, at, in or to a property during the conduct of all appropriate inquiries does not relieve a landowner from complying with the other post-acquisition statutory requirements for obtaining the liability protections. Landowners must comply with all the statutory requirements to obtain the liability protection. For example, an inability to identify a release or threatened release during the conduct of all appropriate inquiries does not negate the landowner's responsibilities under the statute to take reasonable steps to stop a release, prevent a threatened release, and prevent exposure to any previous release once any release is identified. Compliance with the other statutory requirements for the bona fide prospective purchaser liability protection is not contingent upon the findings of all appropriate inquiries.

2. Contiguous Property Owner

The Brownfields Amendments added a new contiguous property owner provision at CERCLA section 107(q). This provision excludes from the definition of ''owner'' or ''operator'' under CERCLA section 107(a)(1) and (2) a person who owns property that is ''contiguous to, or otherwise similarly situated with respect to, and that is or may be contaminated by a release or threatened release of a hazardous substance from'' property owned by someone else. To qualify as a contiguous property owner, a landowner must have no knowledge or reason to know of contamination at the time of acquisition, have conducted all appropriate inquiries, and meet all of the criteria set forth in CERCLA section 107(q)(1)(A), which include, without limitation:

- Not causing, contributing, or consenting to the release or threatened release;
- Not being potentially liable nor affiliated with any other person who is potentially liable for response costs at the property;
- Taking reasonable steps to stop continuing releases, prevent any threatened release, and prevent or limit human, environmental, or natural resource exposure to any hazardous substances released on or from the landowner's property;
- Providing full cooperation, assistance, and access to persons that are authorized to conduct response actions or natural resource restorations;
- Complying with land use restrictions established or relied on in connection with a response action;
- Not impeding the effectiveness or integrity of any institutional controls;
- Complying with any CERCLA request for information or administrative subpoena;
- Providing all legally required notices with respect to discovery or release of any hazardous substances at the property.

The contiguous property owner liability protection ''protects parties that

are essentially victims of pollution incidents caused by their neighbor's actions.'' S. Rep. No. 107–2, at 10 (2001). Contiguous property owners must perform all appropriate inquiries prior to purchasing property. However, performing all appropriate inquiries in accordance with the regulatory requirements alone is not sufficient to assert the liability protections afforded under CERCLA. Property owners must fully comply with all of the statutory requirements to be afforded the contiguous property owner liability protection. Persons who know, or have reason to know, that the property is or could be contaminated at the time of acquisition of a property cannot qualify for the liability protection as a contiguous property owner, but may be entitled to bona fide prospective purchaser status.

Persons claiming to be contiguous property owners should keep in mind that failure to identify an environmental condition or identify a release or threatened release of a hazardous substance on, at, in or to a property during the conduct of all appropriate inquiries, does not relieve a landowner from complying with the other statutory requirements for obtaining the contiguous landowner liability limitation. Landowners must comply with all the statutory requirements to qualify for the liability protections. For example, an inability to identify a release or threatened release during the conduct of all appropriate inquiries does not negate the landowner's responsibilities under the statute to take reasonable steps to stop the release, prevent a threatened release, and prevent exposure to previous releases once a release is identified. None of the other statutory requirements for the contiguous property owner liability protection is contingent upon the results of the conduct of all appropriate inquiries.

3. Innocent Landowner

The Brownfields Amendments also clarify the innocent landowner defense. To qualify as an innocent landowner, a person must conduct all appropriate inquiries and meet all of the statutory requirements. The requirements include, without limitation:

- Having no knowledge or reason to know that any hazardous substance which is the subject of a release or threatened release was disposed of on, in, or at the facility;
- Providing full cooperation, assistance and access to persons authorized to conduct response actions at the property;
- Complying with any land use restrictions and not impeding the effectiveness or integrity of any institutional controls;
- Taking reasonable steps to stop continuing releases, prevent any threatened release, and prevent or limit human, environmental, or natural resource exposure to any previously released hazardous substances;

To successfully assert an innocent landowner liability defense, a property owner must demonstrate compliance with CERCLA section 107(b)(3) as well. Such persons must establish, by a preponderance of the evidence:

- That the release or threat of release of hazardous substances and the resulting damages were caused by an act or omission of a third party with whom the person does not have employment, agency, or a contractual relationship;
- The person exercised due care with respect to the hazardous substance concerned, taking into consideration the characteristics of such hazardous substance, in light of all relevant facts and circumstances;
- Took precautions against foreseeable acts or omissions of any such third party and the consequences that could foreseeably result from such acts or omissions.

Like contiguous property owners, innocent landowners must perform all appropriate inquiries prior to or on the date of acquisition of a property and cannot know, or have reason to know, of contamination to qualify for this landowner liability protection. Persons claiming to be innocent landowners also should keep in mind that failure to identify an environmental condition or identify a release or threatened release of a hazardous substance on, at, in or to a property during the conduct of all appropriate inquiries, does not relieve or exempt a landowner from complying with the other statutory requirements for asserting the innocent landowner defense. Landowners must comply with all the statutory requirements to obtain the defense. For example, an inability to identify a release or threatened release during the conduct of all appropriate inquiries does not negate the landowner's responsibilities under the statute to take reasonable steps to stop the release, prevent a threatened release, and prevent exposure to a previous release. Compliance with the other statutory requirements for the innocent landowner defense is not contingent upon the results of an all appropriate inquiries investigation.

E. What Criteria Did Congress Establish for the All Appropriate Inquiries Standard?

Congress included in the Brownfields Amendments a list of criteria that the Agency must include in the regulations establishing standards and practices for conducting all appropriate inquiries. In addition to providing these criteria in the statute, Congress instructed EPA to develop regulations establishing standards and practices for conducting all appropriate inquiries in accordance with generally accepted good commercial and customary standards and practices. The criteria are set forth in CERCLA section 101(35)(2)(B)(iii) and include:

- The results of an inquiry by an environmental professional.
- Interviews with past and present owners, operators, and occupants of the facility for the purpose of gathering information regarding the potential for contamination at the facility.
- Reviews of historical sources, such as chain of title documents, aerial photographs, building department records, and land use records, to determine previous uses and occupancies of the real property since the property was first developed.
- Searches for recorded environmental cleanup liens against the facility that are filed under federal, state, or local law.
- Reviews of federal, state, and local government records, waste disposal records, underground storage tank records, and hazardous waste handling, generation, treatment, disposal, and spill records, concerning contamination at or near the facility.
- Visual inspections of the facility and of adjoining properties.
- Specialized knowledge or experience on the part of the defendant.
- The relationship of the purchase price to the value of the property, if the property was not contaminated.
- Commonly known or reasonably ascertainable information about the property.
- The degree of obviousness of the presence or likely presence of contamination at the property, and the ability to detect the contamination by appropriate investigation.

III. Summary of Comments and Changes From Proposed Rule to Final Rule

EPA received over 400 public comments in response to the August 26, 2004 proposed rule. Comments were received from environmental consultants with experience in performing site assessments, trade

associations, state government agencies, environmental interest groups, and other public interest associations. Commenters generally supported the purpose and goals of the proposed rule. Many commenters complimented the Agency on its decision to develop the proposed rule using the negotiated rulemaking process. However, commenters had differing views on certain aspects of the proposed rule. In particular, the Agency received widely differing views on the proposed definition of ''environmental professional.'' Although many commenters supported the definition as proposed, other commenters raised concerns regarding the stringency of the proposed qualifications. A significant number of commenters applauded the proposed definition of an environmental professional and stated that it may increase the rigor and caliber of environmental site investigations. Commenters who would not qualify as an environmental professional under the proposed definition raised concerns with regard to the specific qualifications proposed.

EPA received a significant number of comments regarding the statutory requirements for qualifying for the CERCLA liability protections. Several commenters also raised concerns with regard to the performance-based approach to the all appropriate inquiries investigation included in the proposed rule. Commenters were concerned that the proposed performance-based approach would make it more difficult to qualify for the CERCLA liability protections than an approach that requires strict adherence to prescriptive data gathering requirements that do not allow for the application of professional judgment. However, the vast majority of commenters who commented on the performance-based nature of the proposed rule supported the proposed approach.

Other commenters raised concerns with regard to the proposed rule's requirements to identify and comment upon the significance of ''data gaps'' where the lack of information may affect the ability of an environmental professional to render an opinion regarding conditions at a property that are indicative of releases or threatened releases of hazardous substances. Commenters were concerned that if any data gaps exist potential contamination would not be identified, allowing property owners to escape liability for contamination. Other commenters supported the proposed requirement to identify data gaps, or missing information, that may affect the environmental professional's ability to render an opinion regarding the environmental conditions at a property and comment on their significance in this regard and stated that the requirement would lend credibility to the inquiry's final report.

We received many comments on the proposed provision to compare the purchase price of a property to the fair market value of the property (if the property were not contaminated). One concern raised is that commenters believe that the exact market value of a property is difficult to determine. Some commenters took exception to the fact that EPA did not propose that prospective landowners have to conduct formal real estate appraisals of the property to determine fair market value. Although this provision has been a statutory requirement for the conduct of all appropriate inquiries since 1986, some commenters thought the requirement should not be included within the scope of all appropriate inquiries. Other commenters stated that the environmental professional should not be required to undertake the comparison.

We received some comments on the results of the economic impact analysis that was conducted to assess the potential costs and impacts of the proposed rule. Many commenters generally agreed with the Agency's conclusion that the average incremental cost increase associated with the requirements in the proposed rule over the current industry standard would be minimal. However, some commenters asserted that EPA underestimated the incremental costs associated with the proposed rule. Although a few commenters mentioned particular activities included as requirements in the proposed rule that would increase the burdens and costs associated with conducting all appropriate inquiries, most of these commenters did not provide specific reasons for claimed cost increases over baseline activities. Some commenters simply stated that the proposed requirements would result in an increase in the price of phase I environmental site assessments. We provide a summary of the comments received on the economic impact analysis for the proposed rule, our responses to issues raised by commenters, and the results of some additional analyses conducted based on some of the issues raised, in an addendum to the economic impact analysis, which is provided in the docket for today's final rule.

In section IV of this preamble, we discuss the requirements of the final rule, including a summary of the provisions included in the August 26, 2004 proposed rule, the significant comments raised in response to the proposed provisions, and a summary of our rationale for the final rule requirements. Generally, the final rule closely resembles the provisions included in the proposed rule. We adopted relatively minor changes in response to public comments. For example, we received a number of comments urging EPA to modify the proposed definition of environmental professional to allow individuals who have significant experience in conducting environmental site assessments, but do not have a Baccalaureate degree, to qualify as environmental professionals. We were convinced by the arguments presented in many of these public comments. Therefore, the definition of an environmental professional included in today's final rule allows individuals with ten years of relevant full time experience to qualify as an environmental professional for the purpose of overseeing and performing all appropriate inquiries.

With respect to the proposed requirements governing the use of previously-conducted environmental site assessments for a particular property, we agreed with commenters who pointed out the proposed rule was unclear. In today's final rule, we modify the proposed rule language to allow for the use of information contained in previously-conducted assessments, even if the information was collected more than a year prior to the date on which the subject property is acquired. The final rule does require that all aspects of a site assessment, or all appropriate inquiries investigation, completed more than one year prior to the date of acquisition of the subject property be updated to reflect current conditions and current property-specific information. In the case of all appropriate inquiries investigations completed less than one year prior to the date of acquisition of the subject property but more than 180 days before the acquisition date, the final rule retains the requirements of the proposed rule that only certain aspects of the all appropriate inquiries must be updated.

In the case of the requirement to search for institutional controls that was included in the proposed requirements to review federal, state, tribal and local government records, we agreed with commenters who pointed out that searching for institutional controls associated with properties located within a half mile of the subject property is overly burdensome and without sufficient benefit to the purpose of the investigation. The final rule

requires that the search for institutional controls be confined to the subject property only.

We adopted one other change in the final rule, based upon public comments. In the proposed rule, we delineated responsibilities for particular aspects of the all appropriate inquiries investigation between the environmental professional and the prospective landowner of the subject property (or grantee). We defined the inquiry of the environmental professional to include: interviews with past and present owners, operators and occupants; reviews of historical sources of information; reviews of federal state tribal and local government records; visual inspections of the facility and adjoining property; commonly known or reasonably ascertainable information; and degree of obviousness of the presence or likely presence of contamination at the property and the ability to detect the contamination by appropriate investigation. We also defined ''additional inquiries'' that must be conducted by the prospective landowner or grantee (or an individual on the prospective landowner's or grantee's behalf). These ''additional inquiries'' include: specialized knowledge or experience of the prospective landowner (or grantee); the relationship of the purchase price to the fair market value of the property, if the property was not contaminated; and commonly known or reasonably ascertainable information. The requirement to search for environmental cleanup liens was proposed to be the responsibility of the prospective landowner (or grantee), if the search is not conducted by the environmental professional. The proposed rule required the prospective landowner (or grantee) to provide all information collected as part of the ''additional inquiries'' to the environmental professional.

The final rule retains the proposed delineation of responsibilities. However, based upon the input provided in public comments, the final rule does not require the prospective landowner (or grantee) to provide the information collected as part of the ''additional inquiries'' to the environmental professional. Although we continue to believe that the information collected or held by the prospective landowner (or grantee) should be provided to the environmental professional overseeing the other aspects of the all appropriate inquiries, we agree with commenters who asserted that prospective landowners and grantees should not be required to provide this information to the environmental professional. Commenters argued that property owners (and grantees) may want to hold some information (*e.g.*, the purchase price of the property) confidential. CERCLA liability rests with the owner or operator of a property and not with an environmental professional hired by the prospective landowner and who is not involved with the ownership or operation of the property. Since it ultimately is up to the owner or operator of a property to defend his or herself against any claims to liability, we agree with commenters that asserted that the regulations should not require that prospective landowners (or grantees) provide information collected to comply with the ''additional inquiries'' provisions to the environmental professional. Should the required information not be provided to the environmental professional, the environmental professional should assess the impact that the lack of such information may have on his or her ability to render an opinion with regard to conditions indicative of releases or threatened releases of hazardous substances on, at, in or to the property. If the lack of information does impact the ability of the environmental professional to render an opinion with regard to the environmental conditions of the property, the environmental professional should note the missing information as a data gap in the written report. We discuss each of the requirements of the final rule in Section IV of this preamble.

IV. Detailed Description of Today's Rule

A. What Is the Purpose and Scope of the Rule?

The purpose of today's rule is to establish federal standards and practices for the conduct of all appropriate inquiries. Such inquiries must be conducted by persons seeking any of the landowner liability protections under CERCLA prior to acquiring a property (as outlined in Section II.D. of this preamble). In addition, persons receiving federal brownfields grants under the authorities of CERCLA section 104(k)(2)(B) to conduct site characterizations and assessments must conduct such activities in compliance with the all appropriate inquiries regulations.

In the case of persons claiming one of the CERCLA landowner liability protections, the scope of today's rule includes the conduct of all appropriate inquiries for the purpose of identifying releases and threatened releases of hazardous substances on, at, in or to the property that would be the subject of a response action for which a liability protection would be needed and such a property is owned by the person asserting protection from liability. CERCLA liability is limited to releases and threatened releases of hazardous substances which cause the incurrence of response costs. Therefore, in the case of all appropriate inquiries conducted for the purpose of qualifying for protection from CERCLA liability (CERCLA section 107), the scope of the inquiries is to identify releases and threatened releases of hazardous substances which cause or threaten to cause the incurrence of response costs.

In the case of persons receiving Federal brownfields grants to conduct site characterizations and assessments, the scope of the all appropriate inquiries standards and practices may be broader. The Brownfields Amendments include a definition of a ''brownfield site'' that includes properties contaminated or potentially contaminated with substances not included in the definition of ''hazardous substance'' in CERCLA section 101(14). Brownfields sites include properties contaminated with (or potentially contaminated with) hazardous substances, petroleum and petroleum products, controlled substances, and pollutants and contaminants (as defined in CERCLA section 101(33)). Therefore, in the case of persons receiving federal brownfields grant monies to conduct site assessment and characterization activities at brownfields sites, the scope of the all appropriate inquiries may include these other substances, as outlined in § 312.1(c)(2), to ensure that persons receiving brownfields grants can appropriately and fully assess the properties as required. It is not the case that every recipient of a brownfields assessment grant has to include within the scope of the all appropriate inquiries petroleum and petroleum products, controlled substances and CERCLA pollutants and contaminants (as defined in CERCLA section 101(33)). However, in those cases where the terms and conditions of the grant or the cooperative agreement with the grantee designate a broader scope to the investigation (beyond CERCLA hazardous substances), then the scope of the all appropriate inquiries should include the additional substances or contaminants.

The scope of today's rule does not include property purchased by a non-governmental entity or non-commercial entity for ''residential use or other similar uses * * * [where] a facility inspection and title search * * * reveal no basis for further investigation.'' (Pub. L. 107–118 § 223). CERCLA section

101(35)(B)(v) states that in those cases, title search and facility inspection that reveal no basis for further investigation shall satisfy the requirements for all appropriate inquiries.

We note that today's rule does not affect the existing CERCLA liability protections for state and local governments that acquire ownership to properties involuntarily in their functions as sovereigns, pursuant to CERCLA sections 101(20)(D) and 101(35)(A)(ii). Involuntary acquisition of properties by state and local governments fall under those CERCLA provisions and EPA's policy guidance on those provisions, not under the all appropriate inquiry provisions of CERCLA section 101(35)(B).

B. To Whom Is the Rule Applicable?

Today's rule applies to any person who may seek the landowner liability protections of CERCLA as an innocent landowner, contiguous property owner, or bona fide prospective purchaser. The statutory requirements to obtain each of these landowner liability protections include the conduct of all appropriate inquiries. In addition, the rule applies to individuals receiving Federal grant monies under CERCLA section 104(k)(2)(B) to conduct site characterization and assessment activities. Persons receiving such grant monies must conduct the site characterization and assessment in compliance with the all appropriate inquiries regulatory requirements.

C. Does the Final Rule Include Any New Reporting or Disclosure Obligations?

The final rule does not include any new reporting or disclosure obligations. The rule only applies to those property owners who may seek the landowner liability protections provided under CERCLA for innocent landowners, contiguous property owners or bona fide prospective purchasers. The documentation requirements included in this rule are primarily intended to enhance the inquiries by requiring the environmental professional to record the results of the inquiries and his or her conclusions regarding conditions indicative of releases and threatened releases on, at, in, or to the property and to provide a record of the environmental professional's inquiry. Today's rule contains no new requirements to notify or submit information to EPA or any other government entity.

Although today's rule does not include any new disclosure requirements, CERCLA section 103 does require persons in charge of vessels and facilities, including on-shore and off-shore facilities, to notify the National Response Center of any release of a hazardous substance from the vessel or facility in a quantity equal to or greater than a ''reportable quantity,'' as defined in CERCLA section 102(b). Today's rule includes no changes to this reporting requirement nor any changes to any other reporting or disclosure requirements under federal, tribal, or state law.

D. What Are the Final Documentation Requirements?

The proposed rule required that the environmental professional, on behalf of the property owner, document the results of the all appropriate inquiries in a written report. As explained in the preamble to the proposed rule, the property owner could use this report to document the results of the inquiries. Such a report can be similar in nature to the type of report previously provided under generally accepted commercial practices. We proposed no requirements regarding the length, structure, or specific format of the written report. In addition, the proposed rule did not require that a written report of any kind be submitted to EPA or any other government agency, or that a written report be maintained on-site at the subject property for any length of time.

Today's final rule retains the requirements, as proposed, for documenting the results of the all appropriate inquiries investigation conducted under the supervision or responsible charge of an environmental professional. As noted above, the primary purpose of the documentation requirement is to enhance the inquiry of the environmental professional by requiring that the environmental professional record the results of the inquiries and his or her conclusions. The written report may allow any person claiming one of the CERCLA landowner liability protections to offer documentation in support of his or her claim that all appropriate inquiries were conducted in compliance with the federal regulations.[1] The Agency notes that while today's final regulation does not require parties conducting all appropriate inquiries to retain the written report or any other documentation discovered, consulted, or created in the course of conducting the inquiries, the retention of such documentation and records may be helpful should the property owner need to assert protection from CERCLA liability after purchasing a property.

The final rule requires that a written report documenting the results of the all appropriate inquiries include an opinion of an environmental professional as to whether the all appropriate inquiries conducted identified conditions indicative of releases or threatened releases of hazardous substances on, at, in or to the subject property. The rule also requires that the report identify data gaps in the information collected that affect the ability of the environmental professional to render such an opinion and that the environmental professional comment on the significance of the data gaps.

Several commenters raised issues with regard to the proposed requirement that the environmental professional document and comment on the significance of data gaps that affect the ability of the environmental professional to identify conditions indicative of releases or threatened releases of hazardous substances on at, in, or to the subject property. Some commenters stated that the need to identify data gaps will make it difficult to determine when an all appropriate inquiries investigation is complete and therefore the requirement would act as a disincentive to the development of potentially contaminated properties. Other commenters asserted that the fact that the regulations recognize data gaps creates a loophole that would result in property owners claiming to be protected from CERCLA liability after conducting an incomplete investigation that includes significant data gaps. These commenters raised concerns that CERCLA liability protection could be claimed by property owners simply because they conducted an all appropriate inquiries investigation, even in those cases where releases on, at, in, or to the property were missed during the investigation. Other commenters stated their support for the requirements to document data gaps, as proposed. A summary of EPA's response to these comments and the requirements for documenting data gaps included in the final rule is provided below in Section IV.N.

The final rule, at § 312.21(d), retains the proposed requirement that the environmental professional who conducts or oversees the all appropriate inquiries sign the written report. There are two purposes for the requirement to include a signature in the report. First, the individual signing the report must declare, on the signature page, that he or she meets the definition of an

[1] Nothing in this regulation or preamble is intended to suggest that any particular documentation prepared in conducting all appropriate inquiries will be admissible in court in any litigation where a party raises one of the liability protections, or will in any way alter the judicial rules of evidence.

environmental professional, as provided in § 312.10. In addition, the rule requires that the environmental professional declare that: [I, We] have developed and performed the all appropriate inquiries in conformance with the standards and practices set forth in 40 CFR part 312.

Some commenters raised concerns about whether the proposed rule would require the environmental professional to certify the all appropriate inquiries report and its findings. Today's final rule does not require the environmental professional to ''certify'' the results of the all appropriate inquiries when signing the report. The two statements or declarations mentioned above and required to be included in the final written report documenting the conduct of all appropriate inquiries are meant to document that an individual meeting the qualifications of an environmental professional was involved in the conduct of the all appropriate inquiries and that the activities performed by, or under the supervision or responsible charge of, the environmental professional were performed in conformance with the regulations. Reports signed by individuals holding a Professional Engineer (P.E.) or Professional Geologist (P.G.) license, need not include the individual's professional seal.

A few commenters requested that EPA include specific requirements for the content of a final report in the final rule. Given that the type and extent of information available on a particular property may vary greatly with its size, type, past uses, and location, and the type and extent of information necessary for an environmental professional to render an opinion regarding conditions indicative of releases or threatened releases of hazardous substances associated with any property may vary, we decided not to include in the final rule specific requirements governing the content of all reports.

The provisions of the final rule allow for the property owner (or grantee) and any environmental professional engaged in the conduct of all appropriate inquiries for a specific property to design and develop the format and content of a written report that will meet the prospective landowner's (or grantee's) objectives and information needs in addition to providing documentation that all appropriate inquiries were completed prior to the acquisition of the property, should the landowner (or grantee) need to assert protection from liability after purchasing a property.

E. What Are the Qualifications for an Environmental Professional?

Proposed Rule

In the Brownfields Amendments, Congress required that all appropriate inquiries include ''the results of an inquiry by an environmental professional'' (CERCLA section 101(35)(B)(iii)(I)). The proposed rule included minimal qualifications for persons managing or overseeing all appropriate inquiries. The intent of setting minimum professional qualifications, is to ensure that all inquiries are conducted at a high level of professional ability and ensure the overall quality of both the inquiries conducted and the conclusions or opinions rendered with regard to conditions indicative of the presence of a release or threatened release on, at, in, or to a property, based upon the results of all inquiries. The proposed rule required that an environmental professional conducting or overseeing all appropriate inquiries possess sufficient specific education, training, and experience necessary to exercise professional judgment to develop opinions and conclusions regarding the presence of releases or threatened releases of hazardous substances to the surface or subsurface of a property. In addition, the proposed rule included minimum qualifications, including minimum levels of education and experience, that characterize the type of professional who is best qualified to oversee and direct the development of comprehensive inquiries and provide the landowner with sound conclusions and opinions regarding the potential for releases or threatened releases to be present at the property. The proposed rule allowed for individuals not meeting the proposed definition of an environmental professional to contribute to and participate in the all appropriate inquiries on the condition that such individuals are conducting inquiries activities under the supervision or responsible charge of an individual that meets the regulatory definition of an environmental professional.

The proposed rule required that the final review of the all appropriate inquiries and the conclusions that follow from the inquiries rest with an individual who qualifies as an environmental professional, as defined in proposed section § 312.10 of the proposed rule. The proposed rule also required that in signing the report, the environmental professional must document that he or she meets the definition of an ''environmental professional'' included in the regulations.

The proposed definition first and foremost required that, to qualify as an environmental professional, a person must ''possess sufficient specific education, training, and experience necessary to exercise professional judgment to develop opinions and conclusions regarding the presence of releases or threatened releases * * * to the surface or subsurface of a property, sufficient to meet the objectives and performance factors'' that are provided in the proposed regulation. The proposed definition of an environmental professional included individuals who possess the following combinations of education and experience.

- Hold a current Professional Engineer's (P.E.) or Professional Geologist's (P.G.) license or registration from a state, tribe, or U.S. territory and have the equivalent of three (3) years of full-time relevant experience; or
- Be licensed or certified by the federal government, a state, tribe, or U.S. territory to perform environmental inquiries as defined in § 312.21 and have the equivalent of three (3) years of full-time relevant experience; or
- Have a Baccalaureate or higher degree from an accredited institution of higher education in a relevant discipline of engineering, environmental science, or earth science and the equivalent of five (5) years of full-time relevant experience; or
- As of the date of the promulgation of the final rule, have a Baccalaureate or higher degree from an accredited institution of higher education and the equivalent of ten (10) years of full-time relevant experience.

Public Comments

We received a significant number of public comments on the proposed definition of environmental professional. Many commenters supported the definition of environmental professional as proposed. However, a significant number of commenters raised concerns with regard to the proposed educational requirements. Commenters pointed out that the proposed minimum qualifications for an environmental professional did not allow for individuals with many years of relevant experience in conducting environmental site assessments to qualify as environmental professionals, if such individuals do not have college degrees. The proposed rule only allowed for persons with a Baccalaureate degree or higher in specific disciplines of science and engineering, and a specific number of years of experience, to qualify as an

environmental professional, unless an individual was otherwise licensed as an environmental professional by a state, tribe or the federal government. Some commenters questioned the Agency's reasoning for restricting the degree requirements to only certain types of science or engineering. Commenters requested that EPA provide more specific definitions of the types of science and engineering degrees that would be necessary to qualify as an environmental professional.

Commenters also asserted that the proposed ''grandfather clause'' allowing for individuals having a Baccalaureate degree (or higher) and who accumulated ten years of full time relevant experience on or before the promulgation date of the final rule to qualify as an environmental professional was too stringent and provided too small of a window of opportunity for individuals not otherwise meeting the proposed definition of environmental professional to qualify.

Some commenters stated that the definition of environmental professional should not be restricted to those individuals licensed as P.E.s or P.G.s. A few commenters stated that a licensed professional is no more qualified to perform all appropriate inquiries investigations than other individuals with a significant number of years of experience in conducting such activities. Other commenters asserted that only licensed P.E.s and P.G.s are qualified to supervise all appropriate inquiries activities.

EPA also received comments from independent professional certification organizations and members of these organizations, including the Academy of Certified Hazardous Materials Managers, requesting that their organizations' certification programs be named in the regulatory definition of an environmental professional.

Final Rule

After careful consideration of the issues raised by commenters regarding the proposed definition of environmental professional, we made a few modifications to the proposed definition to reduce the potential burden that the proposed definition may have placed upon individuals who have significant experience in conducting environmental site assessments but do not meet the proposed educational, or college degree, requirements. We agree with those commenters who asserted that individuals with a significant number of years of experience in performing environmental site assessments, or all appropriate inquiries investigations, should qualify as environmental professionals for the purpose of conducting all appropriate inquiries, even in cases where such individuals do not have a college degree. Therefore, in the final rule, persons with ten or more years of full-time relevant experience in conducting environmental site assessments and related activities may qualify as environmental professionals, without having received a college degree.

In addition, we agreed with commenters who pointed out that the requirement that environmental professionals hold specific types of science or engineering degrees was too limiting. In the final rule, persons with any science or engineering degree (regardless of specific discipline in science or engineering) can qualify as an environmental professional, if they also meet the other required qualifications, including the requirement to have five (5) years of full-time relevant experience.

We also agree with commenters who asserted that the proposed grandfather clause was too restrictive. As mentioned above, we agree with commenters who pointed out that individuals with a significant number of years of experience in conducting environmental site assessments or all appropriate inquiries investigations should be able to qualify as environmental professionals, for the purpose of carrying out the provisions of today's rulemaking. In addition, we agree with commenters who stated that the ability for experienced professionals to qualify as an environmental professional should not be limited to those who meet the threshold qualifications on the effective date of the final rule. Therefore, the proposed grandfather clause is not included within the definition of environmental professional in the final rule. As explained above, in today's final rule, individuals with ten or more years of full-time relevant experience in conducting environmental site assessments and related investigations will qualify as environmental professionals for the purposes of this rulemaking.

The final rule retains the provision recognizing as environmental professionals those individuals who are licensed by any tribal or state government as a P.E. or P.G., and have three years of full-time relevant experience in conducting all appropriate inquiries. We continue to contend that such individuals have sufficient specific education, training, and experience necessary to exercise professional judgment to develop opinions and conclusions regarding conditions indicative of releases or threatened releases on, at, in, or to a property, including the presence of releases to the surface or subsurface of the property, sufficient to meet the objectives and performance factors provided in the regulation. The rigor of the tribal- and state-licensed P.E. and P.G. certification processes, including the educational and training requirements, as well as the examination requirements, paired with the requirement to have three years of relevant professional experience conducting all appropriate inquiries will ensure that all appropriate inquiries are conducted under the supervision or responsible charge of an individual well qualified to oversee the collection and interpretation of site-specific information and render informed opinions and conclusions regarding the environmental conditions at a property, including opinions and conclusions regarding conditions indicative of releases or threatened releases of hazardous substances and other contaminants on, at, in, or to the property. The Agency's decision to recognize tribal and state-licensed P.E.s and P.G.s reflects the fact that tribal governments and state legislatures hold such professionals responsible (legally and ethically) for safeguarding public safety, public health, and the environment. To become a P.E. or P.G. requires that an applicant have a combination of accredited college education followed by approved professional training and experience. Once a publicly-appointed review board approves a candidate's credentials, the candidate is permitted to take a rigorous exam. The candidate must pass the examination to earn a license, and perform ethically to maintain it. After a state or tribe grants a license to an individual, and as a condition of maintaining the license, many states require P.E.s and P.G.s to maintain proficiency by participating in approved continuing education and professional development programs. In addition, tribal and state licensing boards can investigate complaints of negligence or incompetence on the part of licensed professionals, and may impose fines and other disciplinary actions such as cease and desist orders or license revocation.

Although the final rule recognizes tribal and state-licensed P.E. and P.G.s and other such government licensed environmental professionals with three years of experience to be environmental professionals, the rule does not restrict the definition of an environmental professional to these licensed individuals. The definition of an

environmental professional also includes individuals who hold a Baccalaureate or higher degree from an accredited institution of higher education in engineering or science and have the equivalent of five (5) years of full-time relevant experience in conducting environmental site assessments, or all appropriate inquiries. In addition, individuals with ten years of full-time relevant experience in conducting environmental site assessments, or all appropriate inquiries qualify as environmental professionals for the purpose of conducting all appropriate inquiries. Individuals with these qualifications most likely will possess sufficient specific education, training, and experience necessary to exercise professional judgment to develop opinions and conclusions regarding conditions indicative of releases or threatened releases on, at, in, or to a property, sufficient to meet the objectives and performance factors included in § 312.20(e) and (f).

In addition to the qualifications for environmental professionals mentioned above, EPA is retaining the proposed provision to include within the definition of an environmental professional individuals who are licensed to perform environmental site assessments or all appropriate inquiries by the Federal government (e.g., the Bureau of Indian Affairs) or under a state or tribal certification program, provided that these individuals also have three years of full-time relevant experience. We contend that individuals licensed by state and tribal governments, or by any department or agency within the federal government, to perform all appropriate inquiries or environmental site assessments, should be allowed to qualify as an environmental professional under today's regulation. State and tribal agencies may best determine the qualifications defining individuals who ''possess sufficient specific education, training, and experience necessary to exercise professional judgment to develop opinions and conclusions regarding conditions indicative of releases or threatened releases on, at, in, or to a property, sufficient to meet the rule's objectives and performance factors'' within any particular state or tribal jurisdiction.

In response to requests from members of independent certification organizations that EPA recognize in the regulation those organizations whose certification requirements meet the environmental professional qualifications included in the final rule, we point out that today's final rule does not reference any private party professional certification standards. Such an approach would require that EPA review the certification requirements of each organization to determine whether or not each organization's certification requirements meet or exceed the regulatory qualifications for an environmental professional. Given that there may be many such organizations and given that each organization may review and change its certification qualifications on a frequent or periodic basis, we conclude that such a undertaking is not practicable. EPA does not have the necessary resources to review the procedures of each private certification organization and review and approve each organization's certification qualifications. Therefore, the final rule includes within the regulatory definition of an environmental professional, general performance-based standards or qualifications for determining who may meet the definition of an environmental professional for the purposes of conducting all appropriate inquiries. These standards include education and experience qualifications, as summarized below. The final rule does not recognize, or reference, any private organization's certification program within the context of the regulatory language. However, the Agency notes that any individual with a certification from a private certification organization where the organization's certification qualifications include the same or more stringent education and experience requirements as those included in today's final regulation will meet the definition of an environmental professional for the purposes of this regulation.

Based upon the input received from the public commenters, EPA determined that the definition of environmental professional included in today's final rule establishes a balance between the merits of setting a high standard of excellence for the conduct of all appropriate inquiries through the establishment of stringent qualifications for environmental professionals and the need to ensure that experienced and highly competent individuals currently conducting all appropriate inquiries are not displaced.

Summary of Final Rule's Definition of Environmental Professional

In summary, the definition of environmental professional included in today's final rule includes individuals who possess the following qualifications:

- Hold a current Professional Engineer's or Professional Geologist's license or registration from a state, tribe, or U.S. territory and have the equivalent of three (3) years of full-time relevant experience; or
- Be licensed or certified by the federal government, a state, tribe, or U.S. territory to perform environmental inquiries as defined in § 312.21 and have the equivalent of three (3) years of full-time relevant experience; or
- Have a Baccalaureate or higher degree from an accredited institution of higher education in science or engineering and the equivalent of five (5) years of full-time relevant experience; or
- Have the equivalent of ten (10) years of full-time relevant experience.

The definition of ''relevant experience'' is ''participation in the performance of environmental site assessments that may include environmental analyses, investigations, and remediation which involve the understanding of surface and subsurface environmental conditions and the processes used to evaluate these conditions and for which professional judgment was used to develop opinions regarding conditions indicative of releases or threatened releases * * * to the subject property.''

The final rule retains the proposed requirement that environmental professionals remain current in their field by participating in continuing education or other activities and be able to demonstrate such efforts.

The final rule also retains the allowance for individuals not meeting the definition of an environmental professional to contribute to and participate in the all appropriate inquiries on the condition that such individuals are conducting inquiries activities under the supervision or responsible charge of an individual that meets the regulatory definition of an environmental professional. This provision allows for a team of individuals working for the same firm or organization (e.g., individuals working for the same government agency) to share the workload for conducting all appropriate inquiries for a single property, provided that one member of the team meets the definition of an environmental professional and reviews the results and conclusions of the inquiries and signs the final report.

The final rule requires that the final review of the all appropriate inquiries and the conclusions that follow from the inquiries rest with an individual who qualifies as an environmental professional, as defined in § 312.10. The final rule also requires that in signing

the report, the environmental professional must document that he or she meets the definition of an ''environmental professional'' included in the regulations.

F. References

Proposed Rule

In the proposed rule, the Agency reserved a reference section and stated in the preamble that we may include references to applicable voluntary consensus standards developed by standards' developing organizations that are not inconsistent with the final regulatory requirements for all appropriate inquiries or otherwise impractical. The Agency requested comments regarding available commercially accepted voluntary consensus standards that may be applicable to and compliant with the proposed federal standards for all appropriate inquiries.

Section 12(d) of the National Technology Transfer and Advancement Act of 1995 (''NTTAA''), Public Law 104–113, section 12(d) (15 U.S.C. 272 note), directs agencies to use technical standards that are developed or adopted by voluntary consensus standards bodies, unless their use would be inconsistent with applicable law or otherwise impractical. Voluntary consensus standards are technical standards (*e.g.*, materials specifications, test methods, sampling procedures, and business practices) that are developed or adopted by voluntary consensus standards bodies. When developing the proposed rule, EPA considered using an existing voluntary consensus standard developed by ASTM International as the federal standard for all appropriate inquiries. This standard is known as the ASTM E1527–2000 standard (entitled ''Standard Practice for Environmental Site Assessments: Phase I Environmental Site Assessment Process''). In the preamble to the proposed rule, we acknowledged the prevalent use of the ASTM E1527–2000 standard and the fact that it generally is recognized as good and customary commercial practice. However, when we proposed the federal standards for all appropriate inquiries, EPA determined that the ASTM E1527–2000 standard is inconsistent with applicable law. As a result, EPA chose not to reference the ASTM E1527–2000 standard because it was inconsistent with applicable law.

Public Comments

We received relatively few comments citing available and applicable voluntary consensus standards for conducting all appropriate inquiries. Several commenters did argue that the interim standard cited in the statute, the ASTM E1527–97 Environmental Site Assessments: Phase I Environmental Site Assessment Process, or the updated ASTM E1527–2000, is sufficient to meet the statutory criteria. A few commenters stated a preference for the ASTM E1527–2000 standard over the requirements included in the proposed rule. ASTM International is a standards development organization whose committees develop voluntary consensus standards for a variety of materials, products, systems and services. ASTM International is the only standards development organization that submitted a comment requesting that the Agency consider its standard, the ASTM E1527–2000 Standard Practice for Environmental Site Assessments: Phase I Environmental Site Assessment Process, as an equivalent standard to the federal regulations.

Final Rule

Since publication of the proposed rule, ASTM International and its E50 committee, the committee responsible for the development of the ASTM E1527–2000 Phase I Environmental Site Assessment Process, has reviewed and updated the ''2000'' version of the E1527 standard to address EPA's concerns regarding the differences between the ASTM E1527–2000 standard and the criteria established by Congress in the Brownfields Amendments to CERCLA. These activities were conducted within the normal review and updating process that ASTM International undertakes for each standard over a five-year cycle.

In today's final rule, EPA is referencing the standards and practices developed by ASTM International and known as Standard E1527–05 (entitled ''Standard Practice for Environmental Site Assessments: Phase I Environmental Site Assessment Process'') and recognizing the E1527–05 standard as consistent with today's final rule. The Agency determined that this voluntary consensus standard is consistent with today's final rule and is compliant with the statutory criteria for all appropriate inquiries. Persons conducting all appropriate inquiries may use the procedures included in the ASTM E1527–05 standard to comply with today's final rule.

It is the Agency's intent to allow for the use of applicable and compliant voluntary consensus standards when possible to facilitate implementation of the final regulations and avoid disruption to parties using voluntary consensus standards that are found to be fully compliant with the federal regulations.

G. What Is Included in ''All Appropriate Inquiries?''

Proposed Rule

The proposed regulations for conducting all appropriate inquiries outlined the standards and practices for conducting the activities included in each of the statutory criterion established by Congress in the Brownfields Amendments. These criteria are set forth in CERCLA section 101(35)(B)(iii) and are:

- The results of an inquiry by an environmental professional (proposed § 312.21).
- Interviews with past and present owners, operators, and occupants of the facility for the purpose of gathering information regarding the potential for contamination at the facility (proposed § 312.23).
- Reviews of historical sources, such as chain of title documents, aerial photographs, building department records, and land use records, to determine previous uses and occupancies of the real property since the property was first developed (proposed § 312.24).
- Searches for recorded environmental cleanup liens against the facility that are filed under Federal, State, or local law (proposed § 312.25).
- Reviews of Federal, State, and local government records, waste disposal records, underground storage tank records, and hazardous waste handling, generation, treatment, disposal, and spill records, concerning contamination at or near the facility (proposed § 312.26).
- Visual inspections of the facility and of adjoining properties (proposed § 312.27).
- Specialized knowledge or experience on the part of the defendant (proposed § 312.28).
- The relationship of the purchase price to the value of the property, if the property was not contaminated (proposed § 312.29).
- Commonly known or reasonably ascertainable information about the property (proposed § 312.30).
- The degree of obviousness of the presence or likely presence of contamination at the property, and the ability to detect the contamination by appropriate investigation (proposed § 312.31).

Public Comments

We received a few comments addressing the statutory criteria and the

inclusion of certain particular criteria within the scope of the proposed rule. Some commenters requested that EPA not include in the final rule the criterion to consider the relationship of the purchase price of the property to the fair market value of the property, if the property is not contaminated. In addition, a few commenters stated the final rule should not include within the scope of the all appropriate inquiries the specialized knowledge or experience on the part of the prospective landowner.

The Agency notes that both criteria that commenters requested be removed from the scope of the all appropriate inquiries regulations are criteria specifically required by Congress to be included in the regulations. In addition, both criteria have been part of the all appropriate inquiries provisions under the CERCLA innocent landowner defense since 1986. The proposed rule included no changes from the previous statutory provisions.

Final Rule

The final rule retains provisions addressing each of the statutory criteria for the conduct of all appropriate inquiries included in CERCLA section 101(35)(B)(iii).

H. Who Is Responsible for Conducting the All Appropriate Inquiries?

The Brownfields Amendments to CERCLA require persons claiming any of the landowner liability protections to conduct all appropriate inquiries into the past uses and ownership of the subject property. The criteria included in the Brownfields Amendments for the regulatory standards for all appropriate inquiries require that the inquiries include an inquiry by an environmental professional. The statute does not require that all criteria or inquiries be conducted by an environmental professional.

Proposed Rule

The proposed rule required that many, but not all, of the inquiries activities be conducted by, or under the supervision or responsible charge of, an individual meeting the qualifications of the proposed definition of an environmental professional. The proposed rule also provided that several of the activities included in the inquiries could be conducted either by the prospective landowner or grantee, and not have to be conducted under the supervision or responsible charge of the environmental professional. The proposed rule required that the results of all activities conducted by the prospective landowner or grantee, and not conducted by or under the supervision or responsible charge of the environmental professional, be provided to the environmental professional to ensure that such information could be fully considered when the environmental professional develops an opinion, based on the inquiry activities, as to whether conditions at the property are indicative of a release or threatened release of a hazardous substance (or other contaminant) on, at, in, or to the property.

The proposed rule allowed for the following activities to be the responsibility of, or conducted by, the prospective landowner or grantee and not necessarily be conducted by the environmental professional, provided the results of such inquiries or activities are provided to an environmental professional overseeing the all appropriate inquiries:

- Searches for environmental cleanup liens against the subject property that are filed or recorded under federal, tribal, state, or local law, as required by proposed § 312.25.
- Assessments of any specialized knowledge or experience on the part of the landowner, as required by § 312.28.
- An assessment of the relationship of the purchase price to the fair market value of the subject property, if the property was not contaminated, as required by § 312.29.
- An assessment of commonly known or reasonably ascertainable information about the subject property, as required by § 312.30.

The proposed rule required that all other required inquiries and activities, beyond those listed above to be conducted by, or under the supervision or responsible charge of, an environmental professional.

Public Comments

Several commenters asserted that the mandatory nature of the proposed provision requiring the prospective landowner to provide information regarding the four criteria listed above to the environmental professional is problematic. Particularly with regard to the requirement to provide ''specialized knowledge or experience of the defendant,'' commenters pointed out difficulties in a prospective landowner being able to document such knowledge and experience sufficiently. Also, with regard to the information related to the ''relationship of the purchase price to the fair market value of the property, if the property was not contaminated,'' many commenters pointed out that prospective landowners may not want to divulge information regarding the price paid for a property. Commenters pointed out that the requirement to consider ''commonly known or reasonably ascertainable information'' about a property is implicit to all aspects of the all appropriate inquiries requirements. In addition, commenters stated that CERCLA liability lies solely with the owners and operators of a vessel or property. A decision on the part of a prospective landowner to not furnish an environmental professional with certain information related to any of the statutory criteria can only affect the property owner's ability to claim a liability protection provided under the statute. In addition, the statute does not mandate that information deemed to be the responsibility of the prospective landowner and not part of the ''inquiry of the environment professional'' be provided to the environmental professional or even be part of the inquiry of the environmental professional. Some of the statutory criteria are inherently the responsibility of the prospective landowner.

Final Rule

We agree with the commenters who asserted that the results and information related to the criteria identified as being the responsibility of the prospective landowner should not, as a matter of law, have to be provided to the environmental professional. The statute does not mandate that a prospective landowner provide all information to an environmental professional. Given that the burden of potential CERCLA liability ultimately falls upon the property owner or operator, a prospective landowner's decision not to provide the results of an inquiry or related information to an environmental professional he or she hired to undertake other aspects of the all appropriate inquiries investigation can only affect the liability of the property owner. In addition, we believe that the environmental professional may be able to develop an opinion with regard to conditions indicative of releases or threatened releases on, at, in, or to a property based upon the results of the criteria identified to be part of the ''inquiry of an environmental professional.'' Any information not furnished to the environmental professional by the prospective landowner that may affect the environmental professional's ability to render such an opinion may be identified by the environmental professional as a ''data gap.'' The provisions of the final rule (as did the proposed rule) then require that the environmental professional comment on the significance of the data gap or missing information on his or her ability to render such an opinion, in light of all

other information collected and all other data sources consulted.

As a result of our consideration of the issues raised by commenters, today's final rule modifies the requirements of § 312.22 ''additional inquiries'' by stating (in paragraph (a)) that ''persons * * * may provide the information associated with such inquiries [i.e., the information for which the prospective landowner or brownfields grantee is responsible] to the environmental professional * * *.'' The proposed rule provided that such information ''must be provided'' to the environmental professional. Although we expect that most prospective landowners and grantees will furnish available information or knowledge about a property to an environmental professional he or she hired when such information could assist the environmental professional in ascertaining the environmental conditions at a property, we affirm that compliance with the statutory criteria does not require that such information be disclosed. Ultimately, CERCLA liability rests with the owner or operator of a facility or property owner and it is the information held by the property owner or operator that may be reviewed in a court of law when determining an owner or operator's liability status, regardless of whether all information was disclosed to an environmental professional during the conduct of all appropriate inquiries.

I. When Must All Appropriate Inquiries Be Conducted?

CERCLA section 101(40)(B)(i), as amended, requires bona fide prospective purchasers to conduct all appropriate inquiries into ''previous ownerships and uses of the facility.'' In the case of contiguous property owners, CERCLA section 107(q)(1)(A)(viii) requires that a person claiming to be a contiguous property owner conduct all appropriate inquiries ''at the time at which the person acquired the property.'' In the case of innocent landowners, section 101(35)(B)(i)(I) of CERCLA requires that the property owner conduct all appropriate inquiries ''on or before the date on which the defendant acquired the facility.''

Proposed Rule

Other than to specify that all appropriate inquiries must be conducted on or prior to the date a person acquires a property, the statute is silent regarding how close to the actual date of acquisition the inquiries must be completed. The proposed rule required that all appropriate inquiries be conducted or updated within one year prior to taking title to a property. The proposed rule provided that prospective landowners could use information collected as part of previous inquiries for the same property, if the inquiries were completed or updated within one year prior to the date the property is acquired. The proposed rule required that certain information collected as part of a previous all appropriate inquiries be updated if it was collected more than 180 days prior to the date a person purchased the property. In addition, in the preamble to the proposed rule, Agency defined the date of acquisition of a property as the date on which the prospective landowner acquires title to the property.

Public Comments

Commenters generally agreed with the proposed provision to define the date of acquisition of a property as the date on which a person acquires title to the property. A few commenters stated that the requirement for an all appropriate inquiries investigation to be completed within a year of the date of acquisition of the property is too stringent and may not allow sufficient time for some property transactions to be completed. Some commenters also asserted that the proposed requirement to update certain aspects of the all appropriate inquiries investigation, if the investigation was conducted more than 180 days prior to the date of the acquisition of the property was too stringent.

Final Rule

The Agency continues to believe that the event that most closely reflects the Congressional intent of the date on which the defendant acquired the property is the date on which a person received title to the property. As explained in the preamble to the proposed rule, the Agency considered other dates, such as the date a prospective landowner signs a purchase or sale agreement. However, it could be burdensome to require a prospective landowner to have completed the all appropriate inquiries prior to having an agreement with a seller to complete a sales transaction. In fact, the time period between the date on which a sales agreement is signed and the date on which the title to the property is actually transferred to the prospective landowner may be the most convenient time for the prospective landowner to obtain access to the property and undertake the all appropriate inquiries. In addition, requiring that all appropriate inquiries be completed on some date prior to the date of title transfer could result in requiring prospective landowners to undertake all appropriate inquiries so early in the property acquisition process as to require the inquiries to be completed prior to the prospective landowner making a final decision on whether to actually acquire the property.

To increase the potential that the information collected for the all appropriate inquiries accurately reflects the proposed objectives and performance factors, as well as to increase the potential that opinions and judgments regarding the environmental conditions at a property that are included in an all appropriate inquiries report are based on current and relevant information, the Agency is retaining the proposed provision that all appropriate inquiries be conducted within one year prior to the prospective landowner acquiring the property. Today's final rule includes regulatory language at § 312.20(a) clarifying that all appropriate inquiries must be conducted within one year prior to the date on which a person acquires a property.

All appropriate inquiries may include information collected for previous inquiries that were conducted or updated within one year prior to the acquisition date of the property. In addition, as explained in more detail below, the final rule retains the requirement that several of the components of the inquiries be updated within 180 days prior to the date the property is purchased. Today's final rule includes a definition of the ''date of acquisition,'' or purchase date, of a property (i.e., the date the landowner obtains title to the property).

Although commenters may be correct in their assertions that some property transactions may take more than a year to close, we continue to believe that it is important for the all appropriate inquiries investigation to be completed within one year prior to the date the property is acquired. We point out that the final regulation, as did the proposed regulation, allows for information from an older investigation to be used in a current investigation. However, if the prior all appropriate inquiries investigation was completed more than a year prior to the property acquisition date, all parts of the investigation must be reviewed and updated for the all appropriate inquiries to be complete. We believe that a year is sufficient time for conditions at a property to change. In particular, in cases where there is a release or threatened release at a property, significant changes to the environmental conditions of a property could occur during the course of a year. In addition, depending upon the uses and ownership of a property during the

course of a one-year time period, overall conditions at a property could change and new evidence of a release or threatened release could appear. Therefore, today's final rule requires that all appropriate inquiries completed for a particular property more than one year prior to the date of acquisition of that property, be updated in their entirety. As summarized below, the final rule does allow for the use of information contained in previous inquiries, even when the inquiries were completed more than a year prior to the property acquisition date, as long as all information was updated within a year and includes any changes that may have occurred during the interim.

J. Can a Prospective Landowner Use Information Collected for Previous Inquiries Completed for the Same Property?

Proposed Rule

The proposed rule allowed parties conducting all appropriate inquiries to use the results of and information from previous inquiries completed for the same property, under certain conditions. First, the previous inquiries must have been conducted in compliance with the proposed rule and with CERCLA sections 101(35)(B), 101(40)(B) and 107(q)(A)(viii). In addition, the information in the previous inquiries must have been collected or updated within one year prior to the date of acquisition of the property. Certain types of information collected more than 180 days prior to the current date of acquisition must be updated for the current all appropriate inquiries. Also, the information required under some specific criterion (e.g., relationship of purchase price to property value, specialized knowledge on part of defendant) must be collected specifically for the current transaction.

Public Comments

A significant number of commenters pointed out that the regulatory language in proposed § 312.20(b)(1) of the proposed rule precludes the use of information contained in assessments or the results of all appropriate inquiries conducted more than a year prior to the date of acquisition of a property. Commenters pointed out that since the language in the proposed rule stated that previously collected information had to have been collected ''in compliance with the requirements of * * * 40 CFR Part 312,'' any information included in all appropriate inquiries reports completed prior to the promulgation of the final rule could not be used, since compliance with the regulation could not be achieved prior to its publication.

Final Rule

It is not the Agency's intent to disallow the use of information contained in previous inquiries, if the environmental professional and the prospective landowner find the previously collected information to be accurate and valid. However, EPA continues to believe that information collected as part of a prior all appropriate inquiries investigation for the same property should be updated to reflect current environmental conditions at the property and to include any specific information or specialized knowledge held by the prospective landowner. The regulatory language in today's final rule (at § 312.20(c)(1)) allows for the use of information collected as part of prior all appropriate inquiries investigation for the same property provided that the prior information was collected ''during the conduct of all appropriate inquiries in compliance with CERCLA sections 101(35)(B), 101(40)(B) and 107(q)(A)(viii).'' We have deleted the proposed language that would have required the previously conducted investigation to have been done in compliance with the final regulation. This allows for the use of information collected as part of previous all appropriate inquiries, as long as the information was collected in compliance with the statutory provisions for all appropriate inquiries. For property purchased on or after May 31, 1997, therefore, any information collected as part of an assessment in compliance with the ASTM E1527–97 standard or the ASTM E1527–2000 standard may be used as part of a current all appropriate inquiries investigation. For property purchased before May 31, 1997, information from assessments completed and in compliance with the statutory provisions at CERCLA section 101(35)(B)(iv)(I) may be used as part of a current all appropriate inquiries investigation. However, this prior information may only be used if updated in accordance with §§ 312.20(b) and (c) of today's rule.

The final rule continues to recognize that there is value in using previously collected information when such information was collected in accordance with the statutory provisions and good customary business practices, particularly when the use of such previously-collected information will reduce the need to undertake duplicative efforts.

The final rule also retains the requirement that certain aspects of the all appropriate inquiries investigation be updated if the investigation was completed more than 180 days prior to the date of acquisition of the property (or the date on which the prospective landowner takes title to the property) to ensure that an all appropriate inquiries investigation accurately reflects the current environmental conditions at a property. To increase the potential that information collected about the conditions of a property is accurate, as well as increase the potential that opinions and judgments regarding the environmental conditions at a property that are included in an all appropriate inquiries report are based on current and relevant information, the final rule requires that many of the components of the previous inquiries be updated within 180 days prior to the date of acquisition of the property. The components of the all appropriate inquiries that must be updated within 180 days prior to the date on which the property is acquired are:

- Interviews with past and present owners, operators, and occupants (§ 312.23);
- Searches for recorded environmental cleanup liens (§ 312.25);
- Reviews of federal, tribal, state, and local government records (§ 312.26);
- Visual inspections of the facility and of adjoining properties (§ 312.27); and
- The declaration by the environmental professional (§ 312.21(d)).

Also, the final rule retains the proposed requirement that in all cases where a prospective landowner is using previously collected information, the all appropriate inquiries for the current purchase must be updated to include a summary of any relevant changes to the conditions of the property and any specialized knowledge of the prospective landowner.

In today's final rule, we continue to recognize that it is not sufficient to wholly adopt previously conducted all appropriate inquiries for the same property without any review. Certain aspects of the all appropriate inquiries investigation are specific to the current prospective landowner and the current purchase transaction. Therefore, the final rule requires that each all appropriate inquiries investigation include current information related to:

- Any relevant specialized knowledge held by the current prospective landowner and the environmental professional responsible for overseeing and signing the all appropriate inquiries report (i.e., requirements of § 312.28);

• The relationship of the current purchase price to the value of the property, if the property were not contaminated (i.e., requirements of § 312.29); and

• Commonly known or reasonably ascertainable information about the property.

K. Can All Appropriate Inquiries Be Conducted by One Party and Transferred to Another Party?

Proposed Rule

The proposed rule allowed for all appropriate inquiries to be conducted by one party and transferred to another party, provided that certain conditions are met. Under certain circumstances, the prospective landowner, or a grantee, may use a report of all appropriate inquiries conducted for the property by or for another party, including the seller of the property or another party. For example, there are situations where the federal government or a state government agency may conduct the all appropriate inquiries on behalf of the local government for a property being purchased by a local government, such as the ''targeted brownfields assessments'' conducted on behalf of local governments by EPA. This situation also may occur when a state government covers the cost of the all appropriate inquiries for a property owned by a local government or actually conducts the all appropriate inquiries itself when the local government does not have access to appropriate staff or capital resources. A local government may conduct all appropriate inquiries for a third party in its community, such as a private prospective landowner. In addition, local redevelopment agencies may locate a contaminated property, conduct all appropriate inquiries, acquire the property, and then sell the property to a private developer.

The proposed rule allowed for a person acquiring a property, or a grantee, to use the results of an all appropriate inquiries report conducted by or for another party, if the report meets the proposed rule's objectives and performance factors and the person who is seeking to use the previously-collected information or report reviews all information collected and updates the contents of the report as required by § 312.20(c) and necessary to accurately reflect current conditions at the property. In addition, the proposed rule required that the prospective landowner, or grantee, update the inquiries and the report to include any commonly known and reasonably ascertainable information, relevant specialized knowledge held by the prospective landowner and the environmental professional, and the relationship of the purchase price to the value of the property, if it were not contaminated.

Public Comments

Commenters generally supported the proposed provision allowing for all appropriate inquiries investigations conducted by or for one party to be used by another party.

Final Rule

For the reasons discussed in the preamble to the proposed rule and summarized above, the final rule retains the provision allowing that all appropriate inquiries investigations may be conducted by or for one party and used by another party. In all cases, the all appropriate inquiries investigation must be updated to include commonly known and reasonably ascertainable information and any relevant specialized knowledge held by the prospective landowner and environmental professional. In addition, the evaluation of the relationship between the purchase price and the fair market value of the property must reflect the current sale of the property. In all other aspects of the investigation, the all appropriate inquiries must be in compliance with the provisions of the final regulation.

L. What Are the Objectives and Performance Factors for the All Appropriate Inquiries Requirements?

Proposed Rule

As explained in the preamble to the proposed rule, when developing the proposed standards, EPA and the Negotiated Rulemaking Committee structured the proposal around the statutory criteria established by Congress in section 101(35)(B)(iii) of CERCLA. As development of the proposed rule progressed, it became apparent that the purposes and objectives for the individual criterion and the types of information that must be collected to meet the objectives of each criterion often overlapped. For example, in developing standards addressing the criterion requiring a review of historical information, a search for recorded environmental cleanup liens, and a review of government records, the Committee concluded that the objectives of each criterion or activity were similar, which could lead to the collection of the same information to fulfill each of the criterion's objectives. For example, a chain of title document is historic information that may include information on environmental cleanup liens, as well as information on past owners of the property indicating that previous owners managed hazardous substances on the property.

To avoid requiring duplicative efforts, but to ensure that the proposed regulations included standards and practices that result in a comprehensive assessment of the environmental conditions at a property, the proposed all appropriate inquiries standards were structured around a concise set of objectives and performance factors. The proposed objectives and performance factors applied to the standards comprehensively. In conducting the inquiries collectively, the landowner and the environmental professional must seek to achieve the objectives and performance factors and use the objectives and standards as guidelines in implementing, in total, all of the other proposed regulatory standards and practices.

Public Comments

Commenters overwhelmingly supported the proposed approach of structuring the all appropriate inquiries standards around a definitive set of performance factors and objectives. Commenters stated that the establishment of performance factors will improve the quality of environmental site assessments because the performance factors allow for the application of professional judgement and provide flexibility.

A few commenters did not support the proposed approach of structuring the regulations around a set of performance factors and objectives. These commenters asserted that the objectives and performance factors made the regulation too vague and open-ended. In addition, the commenters stated that they want the regulation to be centered around a ''checklist'' of activities, each of which should be required to be completed independently and without consideration of a comprehensive performance approach. Commenters who argued for a checklist approach said that such an approach would ensure that the environmental professional only would have to undertake a finite list of activities and it would be easier (in the commenter's opinion) for property owners to obtain liability protection if the list of activities could be completed without regard to performance goals or an overall objective. These commenters also expressed concern that, if the regulations are based on performance factors that the all appropriate inquiries investigation would not have an

endpoint at which prospective landowners could stop looking for evidence of releases or threatened releases. The commenters believed that under a checklist approach liability protection would be awarded upon completion of all activities on the checklist.

Final Rule

We are retaining the proposed performance factors and objectives in the final rule. We continue to believe, as did many commenters, that basing the regulations on a set of overall performance factors and specific objectives lends clarity and flexibility to the standards. Such an approach also allows for the application of professional judgment and expertise to account for site-specific circumstances. The primary objective of an all appropriate inquiries investigation is to identify conditions indicative of releases and threatened releases of hazardous substances on, at, in, or to the subject property. In the case of recipients of brownfields grants, the objective may be expanded to include petroleum and petroleum products, pollutants, contaminants, and controlled substances, depending upon the scope of the grantee's cooperative agreement.

The performance factors are meant to guide the individual aspects of the investigation toward meeting both the statutory criteria for all appropriate inquiries and the regulatory objectives of (1) collecting necessary information about the uses and ownerships of a property and (2) identifying, through the collection of this information, conditions indicative of releases and threatened releases on, at, in, or to the subject property. By establishing a concise set of objectives and setting some boundaries on the information collection activities through the establishment of performance factors, we believe that the final rule fulfills the statutory objectives, provides for a comprehensive assessment of the environmental conditions at the property, and avoids the conduct of duplicative investigations and data collection efforts.

EPA disagrees with the commenters who argued that the proposed approach of establishing overall objectives and performance factors for the all appropriate inquiries standards would result in an approach that is too vague and open-ended. In fact, by establishing clear objectives and setting parameters to the investigation through a set of performance factors that include gathering information that is publicly available, obtainable from its source within reasonable time and cost constraints, and which can practicably be reviewed, the approach taken in the final rule provides reasonable goals and endpoints to the information collection requirements. The proposed objectives provide a discrete list of the types of information that must be collected as part of the all appropriate inquiries investigation. In addition, the performance factors set boundaries around the efforts that must be taken and the cost burdens that must be incurred to obtain the required information. The fact that the rule is framed within a primary objective, to ''identify conditions indicative of releases and threatened releases of hazardous substances,'' actually reduces the open-ended nature of the investigation and establishes an overall goal for the inquiries.

Commenters who advocated that a checklist approach (or an approach not based upon overall objectives and performance factors) is superior because they believe that it would better provide for a stopping point in the investigation may have misunderstood the statutory requirements that must be met to obtain a defense to CERCLA liability. These commenters may have incorrectly assumed that the completion of the all appropriate inquiries investigation is all that is required to obtain liability protection. The conduct of all appropriate inquiries is only one requirement for obtaining relief from CERCLA liability. Prospective landowners must conduct all appropriate inquiries prior to acquiring a property to qualify for a defense to CERCLA liability as an innocent landowner, bona fide prospective purchaser or contiguous landowner. However, once a property is acquired, the property owner must comply with all of the other statutory criteria necessary to qualify for the liability protections. In particular, landowners must undertake ''reasonable steps'' to ''stop any continuing releases.'' Therefore, the final rule's objective of identifying conditions indicative of releases and threatened releases of hazardous substances on, at, in, or to a property links appropriately with the statutory criteria requiring the landowner to address such releases to qualify for the liability protections.

Conducting the inquiries merely in compliance with a checklist and without the purpose of meeting an overall objective could result in an inability to recognize the value of certain types of information or in chasing down multiple sources of information that may not have added value for meeting the overall objective of the investigation. A lack of information or an inability to obtain information that may affect the ability of an environmental professional to determine whether or not there are conditions indicative of a release or threatened release of a hazardous substance (or other contaminant) on, at, in or to a property can have significant consequences regarding a prospective landowner's ultimate ability to claim protection from CERCLA liability. Failure to identify a release during the conduct of all appropriate inquiries does not relieve the property owner from the responsibility to take reasonable steps and address the release. Even if the Agency agreed with the commenters and adopted a ''checklist'' approach for the regulation, simply conducting the checklist of activities and ending the investigation after each activity is conducted would not result in protection from CERCLA liability (as commenters claimed).

The final rule also establishes that in those cases where certain information included in the list of regulatory objectives (§ 312.20(e)) cannot be found or obtained within the parameters of the performance factors, such data gaps must be identified and the significance of the missing information with regard to the environmental professional's ability to render an opinion on the presence of conditions indicative of releases and threatened releases be documented. Exhaustive and costly efforts do not have to be made to access all available sources of data and find every piece of data and information about a property. Nor does the rule require that duplicative information be sought from multiple sources. The inquiries and the overall investigation must be undertaken to meet the data collection objectives and primarily determine the environmental conditions of the property. Structuring the standards around such objectives will render the results of the investigation more valuable to a landowner in his or her efforts to comply with the post acquisition continuing obligations for obtaining the CERCLA liability protections than an approach framed around a mere checklist of activities.

In retaining the proposed objectives and performance factors, the final rule allows that an all appropriate inquiries investigation need not address each of the regulatory criterion in any particular sequence. In addition, information relevant to more than one criterion need not be collected twice, and a single source of information may satisfy the requirements of more than one criterion and more than one objective. However, the information required to achieve each

of the objectives and performance factors must be obtained for the all appropriate inquiries investigation to be complete. Although compliance with the all appropriate inquiries requirements ultimately will be determined in court, the final rule allows the prospective landowner or grantee and environmental professional to determine the best process and sequence for collecting and analyzing all required information. The sequence of activities and the sources of information used to collect any required information is left to the judgment and expertise of the environmental professional, provided that the overall objectives and the performance factors established for the final rule are met.

In performing the inquiries, including but not limited to conducting interviews, collecting historical data and government records, and inspecting the subject property and adjoining properties, all parties undertaking all appropriate inquiries must be attentive to the fact that the primary objectives of the regulation are to identify the following types of information about the subject property:

- Current and past property uses and occupancies;
- Current and past uses of hazardous substances;
- Waste management and disposal activities that could have caused releases or threatened releases of hazardous substances;
- Current and past corrective actions and response activities undertaken to address past and on-going releases of hazardous substances;
- Engineering controls;
- Institutional controls; and
- Properties adjoining or located nearby the subject property that have environmental conditions that could have resulted in conditions indicative of releases or threatened releases of hazardous substances on, at, in, or to the subject property.

EPA notes that in the case of brownfields grantees, the scope of each of the activities listed above may be broader if the grant or cooperative agreement includes within its scope the assessment of a property for conditions indicative of releases or threatened releases of petroleum and petroleum products, controlled substances, or other contaminants.

The final performance factors for achieving the objectives set forth above are set forth in § 312.20(e) and require the persons conducting the inquiries to: (1) Gather the information that is required for each standard and practice that is publicly available, obtainable from its source within reasonable time and cost constraints, and which can practicably be reviewed, and (2) review and evaluate the thoroughness and reliability of the information gathered in complying with each standard and practice, taking into account information gathered in the course of complying with the other standards and practices of this subpart. In complying with § 312.20(f)(2), if the environmental professional or person conducting the inquiries determines through such review and evaluation that the information is either not thorough or not reliable, then further inquiries should be made to ensure that the information gathered is both thorough and reliable. The performance factors are provided as guidelines to be followed in conjunction with the final objectives for the all appropriate inquiries.

M. What Are Institutional Controls?

The final rule requires the identification of institutional controls placed on the subject property. As defined in § 312.10, institutional controls are non-engineered instruments, such as administrative and legal controls, that among other things, can help to minimize the potential for human exposure to contamination, and protect the integrity of a remedy by limiting land or resource use. For example, an institutional control might prohibit the drilling of a drinking water well in a contaminated aquifer or disturbing contaminated soils. Institutional controls also may be referred to as land use controls, activity and use limitations, etc., depending on the program under which a response action is conducted or a release is addressed.

Institutional controls are typically used whenever contamination precludes unlimited use and unrestricted exposure at the property. Thus, institutional controls may be needed both before and after completion of the remedial action or may be employed in place of a remedial action. Institutional controls often must remain in place for an indefinite duration and, therefore, generally need to survive changes in property ownership (i.e., run with the land) to be legally and practically effective. Some common examples of institutional controls include zoning restrictions, building or excavation permits, well drilling prohibitions, easements and covenants.

The importance of identifying institutional controls during all appropriate inquiries is twofold. First, institutional controls are usually necessary and important components of a remedy. Failure to abide by an institutional control may put people at risk of harmful exposure to hazardous substances. Second, an owner wishing to maintain protections from CERCLA liability as an innocent landowner, contiguous property owner, or bona fide prospective purchaser must fulfill ongoing obligations to: (1) Comply with any land use restrictions established or relied on in connection with a response action and (2) not impede the effectiveness or integrity of any institutional control employed in connection with a response action. For a more detailed discussion of these requirements please see EPA, Interim Guidance Regarding Criteria Landowners Must Meet in Order to Qualify for Bona Fide Prospective Purchaser, Contiguous Property Owner, or Innocent Landowner Limitations on CERCLA Liability (Common Elements, 2003).

Those persons conducting all appropriate inquiries may identify institutional controls through several of the standards and practices set forth in this rule. As noted, implementation of institutional controls may be accomplished through the use of several administrative and legal mechanisms, such as zoning restrictions, building permit requirements, easements, covenants, etc. For example, an easement implementing an institutional control might be identified through the review of chain of title documents under § 312.24(a). Furthermore, interviews with past and present owners, operators, or occupants pursuant to § 312.23; and reviews of federal, tribal, state, and local government records under § 312.26, may identify an institutional control or refer a person to the appropriate source to find an institutional control. For example, a review of federal Superfund records, including Records of Decision and Action Memoranda, as well as other information contained in the CERCLIS database, may indicate that zoning was selected as an institutional control or an interview with a current operator may reveal an institutional control as part of an operating permit.

The final rule requires that all appropriate inquiries include a search for institutional controls placed upon the subject property as part of the requirements for reviewing federal, state, tribal, and local government records. A discussion of these requirements is provided in section IV.S below.

N. How Must Data Gaps Be Addressed in the Conduct of All Appropriate Inquiries?

Proposed Rule

The proposed rule required environmental professionals, prospective landowners, and brownfields grant recipients to identify data gaps that affect their ability to identify conditions indicative of releases or threatened releases of hazardous substances (and, in the case of grant recipients, pollutants, contaminants, petroleum and petroleum products, and controlled substances). The proposed rule also required these persons to identify the sources of information consulted to address, or fill, the data gaps and then comment upon the significance of the data gaps with regard to the ability to identify conditions indicative of releases or threatened releases of hazardous substances on, at, in or to the subject property. The proposed rule defined a data gap as a lack of or an inability to obtain information required by the standards and practices listed in the proposed regulation, despite good faith efforts by the environmental professional or the prospective landowner or grant recipient to gather such information.

Public Comments

Some commenters raised concerns that the proposed definition of a data gap may result in difficulties in determining when an all appropriate inquiries investigation is complete. These commenters stated that the need to identify and comment on the significance of data gaps may render it difficult to complete an investigation, that could potentially affect a property owner's ability to claim protection from CERCLA liability. Other commenters asserted that because an investigation could be considered complete despite the existence of a data gap, a regulatory loophole exists (in the opinion of the commenters) that will result in the property owner's being able to claim protection from CERCLA liability even when the all appropriate inquiries investigation results in a failure to identify a release or threatened release at a property.

Some commenters stated that the proposed requirement to identify data gaps, or missing information, that may affect the environmental professional's ability to render an opinion regarding the environmental conditions at a property and comment on their significance in this regard will lend credibility to the inquiry's final report.

Final Rule

We are retaining the proposed definition of data gap and the proposed requirements for identifying and commenting on the significance of data gaps. For the purposes of today's final rule, a ''data gap'' is a lack of or inability to obtain information required by the standards and practices listed in the regulation, despite good faith efforts by the environmental professional or the prospective landowner (or grant recipient) to gather such information pursuant to the objectives for all appropriate inquiries. In today's final rule, § 312.20(g) requires environmental professionals, prospective landowners, and grant recipients to identify data gaps that affect their ability to identify conditions indicative of releases or threatened releases of hazardous substances (and in the case of grant recipients pollutants, contaminants, petroleum and petroleum products, and controlled substances). The final rule requires such persons to identify the sources of information consulted to address the data gaps and comment upon the significance of the data gaps with regard to the ability to identify conditions indicative of releases or threatened releases. Section 312.21(c)(2) also requires that the inquiries report include comments regarding the significance of any data gaps on the environmental professional's ability to provide an opinion as to whether the inquiries have identified conditions indicative of releases or threatened releases.

In response to issues raised by commenters, we point out that the final regulation, as did the proposal, requires that environmental professionals document and comment on the significance of only those data gaps that ''affect the ability of the environmental professional to identify conditions indicative of releases or threatened releases of hazardous substances * * * on, at, in, or to the subject property.'' If certain information included within the objectives and performance factors for the final rule cannot be found and the lack of certain information, in light of all other information that was collected about the property, has no bearing on the environmental professional's ability to render an opinion regarding the environmental conditions at the property, the final rule does not require the lack of such information to be documented in the final report. Given the restriction on the type of data gaps that must be documented, and given that the documentation is restricted to instances where the lack of information hinders the ability of the environmental professional to render an opinion regarding the environmental conditions at the property, we disagree with the commenters who assert that the requirement is overly burdensome or will result in the inability to complete the required investigations.

Commenters who asserted that the requirement to document data gaps would result in a ''loophole'' that would allow property owners to claim protection from CERCLA liability after conducting an incomplete all appropriate inquiries investigation may have misunderstood the scope of the rule and the statutory requirements for obtaining the liability protections. As explained in detail in Section II of this preamble, the conduct of all appropriate inquiries is only one requirement necessary for obtaining protection from CERCLA liability. The mere fact that a prospective landowner conducted all appropriate inquiries does not provide an individual with protection from CERCLA liability. To qualify as a bona fide prospective purchaser, innocent landowner or a contiguous property owner, a person must, in addition to conducting all appropriate inquiries prior to acquiring a property, comply with all of the other statutory requirements. These criteria are summarized in section II.D. of this preamble. The all appropriate inquiries investigation may provide a prospective landowner with necessary information to comply with the other post-acquisition statutory requirements for obtaining liability protections. The conduct of an incomplete all appropriate inquiries investigation, or the failure to detect a release during the conduct of all appropriate inquiries, does not exempt a landowner from his or her post-acquisition continuing obligations under other provisions of the statute. Failure to comply with any of the statutory requirements may be problematic in a claim for protection from liability.

The final rule retains the requirement to identify data gaps, address them when possible, and document their significance. Prospective landowners may wish to consider the potential significance of any data gaps, that may exist after conducting the pre-acquisition all appropriate inquiries in assessing their obligations to fulfill the additional statutory requirements after purchasing a property.

If a person properly conducts all appropriate inquiries pursuant to this rule, including the requirements concerning data gaps at §§ 312.10, 312.20(g) and 312.21(c)(2), the person may fulfill the all appropriate inquiries requirements of CERCLA sections

107(q), 107(r), and 101(35), even when there are data gaps in the inquiries. However, as explained further in this preamble, fulfilling the all appropriate inquiries requirements does not, by itself, provide a person with a protection from or defense to CERCLA liability. Failure to identify a release or threatened release during the conduct of all appropriate inquiries does not negate the landowner's continuing responsibilities under the statute, including the requirements to take reasonable steps to stop the release, prevent a threatened release, and prevent exposure to the release or threatened release once the landowner has acquired a property. Also, if an existing institutional control or land use restriction is not identified during the conduct of all appropriate inquiries prior to the acquisition of a property, a landowner is not exempt from complying with the institutional control or land use restriction after acquiring the property. None of the other statutory requirements for the liability protections is satisfied by the results of the all appropriate inquiries.

We emphasize that the mere fact that a prospective landowner conducted all appropriate inquiries does not provide an individual with a defense to or limitation from CERCLA liability. To qualify as a bona fide prospective purchaser, innocent landowner or a contiguous property owner, a person must, in addition to conducting all appropriate inquiries prior to acquiring a property, comply with all of the other statutory requirements. These criteria are summarized in section II.D. of this preamble. The all appropriate inquiries investigation may provide a prospective landowner with necessary information to comply with the other post-acquisition statutory requirements for obtaining liability protections. The failure to detect a release during the conduct of all appropriate inquiries does not exempt a landowner from his or her post-acquisition continuing obligations under other provisions of the statute.

Section 312.20(g) of the final rule points out that one way to address data gaps may be to conduct sampling and analysis. The final regulation does not require that sampling and analysis be conducted to comply with the all appropriate inquiries requirements. The regulation only notes that sampling and analysis may be conducted, where appropriate, to obtain information to address data gaps. The Agency notes that sampling and analysis may be valuable in determining the possible presence and extent of potential contamination at a property. Such information may be valuable for determining how a landowner may best fulfill his or her post-acquisition continuing obligations required under the statute for obtaining protection from CERCLA liability.

O. Do Small Quantities of Hazardous Substances That Do Not Pose Threats to Human Health and the Environment Have To Be Identified in the Inquiries?

Proposed Rule

The environmental professional should identify and evaluate all evidence of releases or threatened releases on, at, in or to the subject property, in accordance with generally accepted good commercial and customary standards and practices. However, the proposed rule provided that the environmental professional need not specifically identify, in the written report prepared pursuant to § 312.21(c), extremely small quantities or amounts of contaminants, so long as the contaminants generally would not pose a threat to human health or the environment.

Public Comments

EPA received no significant comment on the proposed provision on the identification of extremely small quantities of contamination.

Final Rule

The final retains the provision that the environmental professional need not specifically identify, in the written report prepared pursuant to § 312.21(c), extremely small quantities or amounts of contaminants, so long as the contaminants generally would not pose a threat to human health or the environment.

P. What Are the Requirements for Interviewing Past and Present Owners, Operators, and Occupants?

Proposed Rule

CERCLA section 101(35)(B)(iii)(II) requires EPA to include in the standards and practices for all appropriate inquiries ''interviews with past and present owners, operators, and occupants of the facility for the purpose of gathering information regarding the potential for contamination at the facility.'' The Agency proposed that the inquiry of the environmental professional include interviews with the current owner(s) and occupant(s) of the subject property. In addition, the proposed rule required that interviews be conducted with current and past facility managers with relevant knowledge of the property, as well as past owners, occupants, or operators, and employees of current and past occupants of the property, as necessary, to meet the proposed objectives and performance factors. In the case of abandoned properties, the Agency proposed that the inquiry of the environmental professional include interviewing one or more owners or occupants of neighboring or nearby properties to obtain information on current and past uses of the property and other information necessary to meet the objectives and performance factors.

Public Comments

Several commenters asserted that the requirement to interview current and past owners and occupants of a property may be burdensome. Commenters gave several reasons for asserting that interviews may be burdensome. Some commenters said it is difficult to locate current and past owners and occupants. Other commenters questioned the accuracy of any information that would be provided by a current or past owner or occupant. One commenter expressed concern that the requirement to conduct interviews of current and past owners and occupants of a property could result in the environmental professional divulging information regarding the sale of the property against the prospective landowner's wishes.

In the case of the proposed interview requirements for abandoned properties, some commenters opposed the requirement to interview at least one owner or occupant of a neighboring property. Commenters stated that the proposed requirement was unreasonable and that it is impractical to attempt to find and contact neighboring property owners and occupants. Some commenters said that neighboring property owners and occupants can not be relied upon to provide accurate information about a property.

Final Rule

The requirements for conducting interviews of past and present owners, operators, and occupants of the subject property are included in § 312.23. The final rule identifies these interviews as being within the scope of the inquiry of the environmental professional. Therefore, all interviews must be conducted by the environmental professional or by someone under the supervision or responsible charge of the environmental professional. The intent is that an individual meeting the definition of an environmental professional (§ 312.10) must oversee the conduct of, or review and approve the results of, the interviews to ensure the interviews are conducted in compliance with the objectives and performance

factors (§ 312.20). This is to ensure that the information obtained from the interviews provides sufficient information, in conjunction with the results of all other inquiries, to allow the environmental professional to render an opinion with regard to conditions at the property that may be indicative of releases or threatened releases of hazardous substances (and pollutants, contaminants, petroleum and petroleum products, and controlled substances, if applicable).

The final rule requires the environmental professional's inquiry to include interviewing the current owner and occupant of the subject property. In addition, the rule provides that the inquiry of the environmental professional include interviews of additional individuals, including current and past facility managers with relevant knowledge of the property, past owners, occupants, or operators of the subject property, or employees of current and past occupants of the subject property, as necessary to meet the rule's objectives and in accordance with the performance factors. A primary purpose of the interviews portion of the all appropriate inquiries is to obtain information regarding the current and past ownership and uses of the property, and obtain information regarding the potential environmental conditions of the property. The final rule does not prescribe particular questions that must be asked during the interview. The type and content of any questions asked during interviews will depend upon the site-specific conditions and circumstances and the extent of the environmental professional's (or other individual's under the supervision or responsible charge of the environmental professional) knowledge of the property prior to conducting the interviews. Therefore, the final rule does not include specific questions for the interviews, but requires that the interviews be conducted in a manner that achieves the objectives and performance factors. Interviews with current and past owners and occupants may provide opportunities to collect information about a property that was not previously recorded nor well documented and may provide valuable perspectives on how to find or interpret information required to complete other aspects of the all appropriate inquiries. Information gathered during the interview portion of the all appropriate inquiries may in turn provide valuable information for the on-site visual inspection. Persons conducting the interviews of current and past owners and occupants may want to spend some time during the interviews requesting information on the locations of operations or units used to store or manage hazardous substances on the property.

In the case of properties where there may be more than one owner or occupant, or many owners or occupants, the final rule requires the inquiry to include interviews of major occupants and those occupants that are using, storing, treating, handling or disposing (or are likely to have used, stored, treated, handled or disposed) of hazardous substances (or pollutants, contaminants, petroleum and petroleum products, and controlled substances, as applicable) on the property. The rule does not specify the number of owners and occupants to be interviewed. The environmental professional must perform this function in the manner that best fulfills the objectives and performance factors for the inquiries in § 312.20(e) and (f). Environmental professionals may use their professional judgment to determine the specific occupants to be interviewed and the total number of occupants to be interviewed in seeking to comply with the objectives and performance factors for the inquiries. Interviews must be conducted with individuals most likely to be knowledgeable about the current and past uses of the property, particularly with regard to current and past uses of hazardous substances on the property.

In response to commenters who asserted that the proposed interview requirements are burdensome, we point out that the statutory criteria in CERCLA section 101(35)(B)(iii) include ''interviews with past and present owners, operators, and occupants of the facility for the purpose of gathering information regarding the potential for contamination at the facility.'' EPA asserts that it was clearly congressional intent that the all appropriate inquiries investigation include the conduct of interviews with current and past owners and occupants. We also assert that current and past owners and occupants of a property may be excellent sources of information regarding past and on-going uses of the property as well as the types of waste management activities that were undertaken at the property. Given that the ASTM E1527 Phase 1 Environmental Site Assessment Process, the interim standard for the conduct of all appropriate inquiries, includes requirements for conducting interviews with the current owners and occupants of a property and provides that other owners and occupants are good additional sources of information about property uses and potential contamination at a property, we disagree with commenters who asserted that the proposed and final requirements for conducting interviews will be overly burdensome.

In the case of abandoned properties, the final rule requires the inquiry of the environmental professional to include interviews with one or more owners or occupants of neighboring or nearby properties. In the case of abandoned properties, it most likely will be difficult to identify or interview current or past owners and occupants of the property. Therefore, the final rule requires that at least one owner or occupant of a neighboring property be interviewed to obtain information regarding past owners or uses of the property in cases where the subject property is abandoned and no current owner is available to be interviewed. The final rule defines an abandoned property as a ''property that can be presumed to be deserted, or an intent to relinquish possession or control can be inferred from the general disrepair or lack of activity thereon such that a reasonable person could believe that there was an intent on the part of the current owner to surrender rights to the property.'' As is the case with interviews conducted with current and past owners and occupants of the property, interview questions should be developed prior to the conduct of the interviews, and tailored to gather information to achieve the rule's objectives and performance factors. The final rule contains no specific requirements with regard to the type or content of questions that must be asked during the interviews.

EPA disagrees with commenters who stated that it will be difficult to locate and contact neighboring property owners and occupants. The final rule, as did the proposed rule, requires that the environmental professional only locate and interview one neighboring property owner or occupant and only in those cases where no owner or occupant of the subject property can be identified. An environmental professional should be able to locate one owner or occupant of a neighboring property when conducting the on-site visual inspection of the property. If the environmental professional cannot easily locate an owner and occupant of a neighboring property, he or she may enlist the assistance of local government officials in identifying a neighboring property owner or occupant. As is the case with information ascertained from any interview, the environmental professional must apply his or her judgment when drawing conclusions

based on the information provided in interviews with neighboring property owners and occupants and should attempt to verify any information provided by reviewing other available sources of information.

Q. What Are the Requirements for Reviews of Historical Sources of Information?

Proposed Rule

Historical documents and records may contain information regarding past ownership and uses of a property that may be essential to assessing the potential for environmental conditions indicative of releases or threatened releases of hazardous substances to be present at the property. Historical documents and records, among others, may include chain of title documents, land use records, aerial photographs of the property, fire insurance maps, and records held at local historical societies. The proposed rule required that the inquiry of the environmental professional include a review of historical documents and records for the subject property that document the ownership and use of the property for a period of time as far back in the history of the property as it can be shown that the property contained structures, or from the time the property was first used for residential, agricultural, commercial, industrial, or governmental purposes.

Public Comments

Some commenters raised concerns regarding the proposed requirements to review historical records covering ''a period of time as far back in the history of the subject property as it can be shown that the property contained structures or from the time the property was first used for residential, agricultural, commercial, industrial, or governmental purposes.'' Commenters said that the proposed historical scope of the records search is too extensive. Some commenters requested that in the final rule EPA adopt the provisions for historical records searches provided in the ASTM E1527–2000 standard. Several commenters requested that EPA explicitly require as part of the review of historical records a review of chain of title documents. The commenters asserted that a review of chain of title documents is the only reliable way to identify previous owners of a property.

Final Rule

The statutory criteria in the Brownfields Amendments require that reviews of historical sources of information be conducted to ''determine previous uses and occupancies of the real property since the property was first developed.'' The final rule requires (as did the proposed rule) that historical records on the subject property be searched for information on the property covering a time period as far back in history as there is documentation that the property contained structures or was placed into use of some form. This provision follows the statutory language. In addition, the final rule requires that historical documents and information be reviewed to obtain necessary information for meeting the objectives and performance factors in § 312.20(e) and (f). If a search of historical sources of information results in an inability of the environmental professional to document previous uses and occupancies of the property as far back in history as it can be shown that the property contained structures or was placed into use of some form, and such information is not acquired elsewhere during the investigation then it must be documented as a data gap to the inquiries. The requirements of §§ 312.20(g) and 312.21(c)(2) are applicable to all instances in the all appropriate inquiries that result in data gaps.

Despite the concerns raised by some commenters regarding the scope of the historical records review, we assert that the scope of the requirements in the final rule (as did the scope of the proposed requirements) reflects the statutory language provided in CERCLA section 101(35)(B)(iii). The statutory criterion provide that all appropriate inquiries include ''reviews of historical sources * * * to determine previous uses and occupancies of the real property since the property was first developed.'' We point out that the final rule does allow the environmental professional to exercise his or her professional judgment ''in context of the facts available at the time of the inquiry as to how far back in time it is necessary to search historical records.'' We believe that this provides sufficient flexibility to allow for any circumstances where, due to the availability of other information about a property an environmental professional may conclude that a comprehensive search of historical records is not necessary to meet the objectives and performance factors.

In response to commenters that requested that EPA adopt the provisions of the ASTM E1527–2000 standard for conducting searches of historical records, we assert that the scope of the historical records search in today's final rule is very similar to the scope of ASTM E1527 standard. The ASTM E1527 standard, at section 7.3.1, requires that historical sources of information be searched to identify ''all obvious uses of the property* * *from the present, back to the property's obvious first developed use, or back to 1940, whichever is earlier.'' Given that the language of both the ASTM E1527 standard and the requirements in the final rule for conducting historical records searches is very similar, we conclude that the intent is the same and the final rule represents no change from current good customary business practice. In addition, the final rule provides for sufficient flexibility both within the application of the performance factors to the historical records search requirements and in allowing the environmental professional to apply his or her judgment ''in the context of the facts available at the time of the inquiry.''

The final rule does not require that any specific type of historic information be collected. In particular, the rule does not require that persons obtain a chain of title document for the property. The rule allows for the environmental professional to use professional judgment when determining what types of historical documentation may provide the most useful information about a property's ownership, uses, and potential environmental conditions when seeking to comply with the objectives and performance factors for the inquiries. Although we agree with commenters that chain of title documents may serve as an important source of information regarding past ownership of a property, it may not be the only source of this information. To the extent that chain of title documents are otherwise obtained for other purposes during the conduct of a property sale or transaction, we believe that these documents can easily be made available to the environmental professional by the prospective landowner. Given that the final rule requires that historical records be searched for information on previous uses and ownership of a property for as far back in the history of property as can be shown that the property contained structures or was first used for residential, agricultural, commercial, industrial or governmental purposes, if chain of title documents are the best and most easily attainable source of this information, we assume that such documents will be obtained and used by the environmental professional.

Given the wide variety of property types and locations to which the final rule could apply, any list of specific documents could result in undue burdens on many prospective

landowners and grantees due to difficulties in collecting any specific document for any particular property or property location. Therefore, the final requirements for reviewing historical documents allow the prospective landowner or grantee and the environmental professional to use their judgment, in accordance with generally accepted good commercial and customary standards and practices, in locating the best available sources of historical information and reviewing such sources for information necessary to comply with the rule's objectives and performance factors.

As explained in section IV.J of this preamble, the prospective landowner, grantee, or environmental professional may make use of previously collected information about a property when conducting all appropriate inquiries. The collection of historical information about a property may be a particular case where previously collected information may be valuable, as well as easily accessible. In addition, nothing in the rule prohibits a person from using secondary sources (*e.g.*, a previously conducted title search) when gathering information about historical ownership and usage of a property. As explained in section IV.J, information must be updated if it was last collected more than 180 days prior to the date of acquisition of the property.

R. What Are the Requirements for Searching for Recorded Environmental Cleanup Liens?

For purposes of this rule, recorded environmental cleanup liens are encumbrances on property for the recovery of incurred cleanup costs on the part of a state, tribal or federal government agency or other third party. Recorded environmental cleanup liens often provide an indication that environmental conditions either currently exist or previously existed on a property that may include the release or threatened release of a hazardous substance. The existence of an environmental cleanup lien should be viewed as an indicator of potential environmental concerns and as a basis for further investigation into the potential existence of on-going or continued releases or threatened releases of hazardous substances on, at, in, or to the subject property.

Proposed Rule

The proposed rule required that prospective landowners and grantees, or environmental professionals on their behalf, search for environmental cleanup liens that are recorded under federal, tribal, state, or local law. Environmental cleanup liens that are not recorded by government entities or agencies are not addressed by the language of the statute (the statute speaks only of ''recorded liens''); therefore, the proposed rule required that only a search for recorded environmental liens be included in the all appropriate inquiries investigation.

Public Comments

Some commenters asked that EPA state more clearly that the responsibility for searching for environmental cleanup liens rests with the prospective landowner and not the environmental professional. A few commenters requested that the Agency provide some guidance on where to find recorded environmental cleanup liens.

Final Rule

EPA is finalizing the proposed requirements to search for recorded environmental cleanup liens without changes. The all appropriate inquiries investigation must include a search for recorded environmental cleanup liens. The final rule allows that the search for recorded environmental cleanup liens be performed either by the prospective landowner or grantee, or through the inquiry of the environmental professional. The search for such liens may not necessarily require the expertise of an environmental professional and therefore may be more efficiently or more cost-effectively performed by the prospective landowner or grantee, or his or her agent. Such liens may be included as part of the chain of title documents or may be recorded in some other manner or format by state or local government agencies. If such information is collected by the prospective landowner or grantee, or other agent who is not under the supervision or responsible charge of the environmental professional, the final rule allows for, but does not require, the information that is collected by or on the behalf of the prospective landowner or grantee to be provided to the environmental professional. If the information is provided to the environmental professional, he or she can then make use of such information during the conduct of the all appropriate inquiries and when rendering conclusions or opinions regarding the environmental conditions of the property. If such information is not provided to the environmental professional and the lack of such information affects the ability of the environmental professional to identify conditions indicative of releases or threatened releases of hazardous substances on, at, in or to the property, the lack of information should be noted as a data gap (per the requirements of § 312.21(b)(2)).

Although some commenters requested that EPA be more explicit in the final rule in requiring that the search for recorded environmental cleanup liens be conducted by the prospective landowner (or grantee), we believe that the decision of who conducts the search may be best left up to the judgment of the prospective landowner or grantee and environmental professional. The final rule provides in § 312.22 that the search for recorded environmental cleanup liens can fall outside the inquiries conducted by the environmental professional. The search for recorded environmental cleanup liens is not included as part of the requirements governing the results of an inquiry by an environmental professional (§ 312.21). Therefore, the search may be conducted by the prospective landowner or grantee, his or her attorney or agent, or the environmental professional.

We offer one caution about the conclusion that might be drawn if no recorded environmental cleanup liens are found. If EPA is conducting a cleanup at site at the time it is transferred or acquired, EPA is able to record a lien post acquisition. For example, one type of lien, often referred to as a windfall lien, has no statute of limitations and arises at the time EPA first spends Superfund money. States and localities may have similar mechanisms. Therefore, even if a recorded environmental cleanup lien is not found during the conduct of the all appropriate inquiries investigation, one may be recorded at a later date if EPA is undertaking a cleanup or response action at the property.

With regard to commenters who requested that EPA provide guidance on where to search for environmental cleanup liens, we advise that prospective landowners and grantees to seek the advice of a local realtor, real estate attorney, title company, or other real estate professional. Environmental cleanup liens may be recorded as part of the land title records or as part of other state or local government land or real estate records. Recorded environmental cleanup liens may be recorded in different places, depending upon the particular state and particular locality in which the property is located.

S. What Are the Requirements for Reviewing Federal, State, Tribal, and Local Government Records?

Federal, tribal, state and local government records may contain

information regarding environmental conditions at a property. In particular, government records, or data bases of such information, may include information on previously reported releases of hazardous substances, pollutants, contaminants, petroleum and petroleum products and controlled substances. Government records and available databases can provide valuable information on remedial actions and emergency response activities that may have been conducted at a particular property. Government records also may include information on institutional controls related to a particular property. For example, in the case of NPL sites, EPA Superfund records, including Action Memoranda and Records of Decision, may have information on institutional controls in place at such properties. Government records also may include information on activities or property uses that could cause releases or threatened releases to be present at a property.

Proposed Rule

The proposed rule required that federal, state, tribal and local government records be searched for information necessary to achieve the objectives and performance factors, including information regarding the use and occupancy of and the environmental conditions at the subject property and conditions of nearby or adjoining properties that could have a impact upon the environmental conditions of the subject property. The proposed rule included requirements to search federal, tribal, state, and local government records for information indicative of environmental conditions at the subject property.

The proposed rule also included requirements to review government records, or data bases of information contained in government records, for information about nearby and adjoining properties. Reviews of such records may provide valuable information regarding the potential impact to the subject property from hazardous substances and petroleum contamination migrating from contiguous or nearby properties. The proposed rule included required minimum search distances for government records searches of nearby properties.

To account for property-specific and regionally-specific conditions that can influence the appropriateness of the proposed search distances for any given type of record and property, the proposed rule allowed the environmental professional to adjust the applicable search distances when searching for information about off-site properties by applying professional judgment. For example, appropriate search distances for properties located in rural settings may differ from appropriate search distances for urban settings. In addition, ground water flow direction, depth to ground water, arid weather conditions, the types of facilities located on nearby properties, and other factors may influence the degree of impact to a property from off-site sources. Therefore, the proposed rule allowed the environmental professional to adjust any or all of the proposed minimum search distances for any of the record types, based upon professional judgment and the consideration of site-specific conditions or circumstances when seeking to achieve the proposed objectives and performance factors for the required inquiries.

Public Comments

The Agency received a variety of comments in which commenters expressed concerns about the applicability or adequacy of specific types of government records included in the proposed rule (e.g., CERCLIS records, information on RCRA facilities, ERNS). A few commenters raised concerns about the availability of tribal records. Several commenters raised concerns regarding the availability of government records on institutional controls. Commenters also pointed out that, given the lack of available databases and other information on institutional controls, it may be particularly difficult to search for institutional controls associated with adjoining and nearby properties.

Final Rule

We are finalizing the requirements for reviewing federal, state, tribal, and local government data bases as proposed, with one exception. The final rule requires that government records and available lists for institutional and engineering controls be searched only for information on such controls at the subject property. All appropriate inquiries investigations do not have to include searches for institutional and engineering controls in place at nearby and adjoining properties. We made this change because we agree with commenters who pointed out that information on institutional and engineering controls may be difficult to find as there are no available national sources of this information. Only a few states have available lists of institutional controls. In addition, the information that may be inferred from knowledge of institutional and engineering controls that are in place at adjoining and nearby properties, i.e., that there was a response action, a remedial action, or corrective action taken at the site, can be inferred from information obtained from other sources (e.g., CERCLIS, RCRIS, state records of response actions).

It is important that prospective landowners obtain information on institutional and engineering controls in place at the property being acquired. It also may be important to locate information on such controls in place at nearby properties. To obtain the liability protections afforded under CERCLA (i.e., innocent landowner, contiguous property owner, bona fide prospective purchaser), the statute requires, as part of the ''continuing obligations,'' that the property owner comply with all land use restrictions and not impede the effectiveness of institutional controls. Therefore, it is important that information on institutional and engineering controls be obtained by prospective landowners, even though information about such controls may not have been routinely obtained as part of due diligence practices prior to today's final rule (we note that the current interim standard does include provisions for searching for ''activity and use limitations'').

Routine ''chain of title'' reports may not always contain information labeled as institutional or engineering controls. However, title companies may include, as part of the chain of title reports ''restrictions of record on title'' when such restrictions are recorded because of underlying environmental conditions at a property. Therefore, when requesting information on ''institutional controls'' or ''engineering controls'' about a property, prospective landowners, grantees, and environmental professionals may want to request information on ''restrictions of record on title'' as well, in case any available information on institutional or engineering controls is so labeled in the chain of title records. In addition to chain of title records, information on institutional controls and engineering controls may be recorded in local land records. Also, some states are beginning to create registries to track information on institutional and engineering controls. Therefore, prospective landowners and grantees should consider consulting these other sources of information in addition to chain of title records for information on institutional and engineering controls.

In response to the commenters who pointed out particular shortcomings with specific sources of information (e.g., CERCLIS, RCRIS, ERNS) we point out that the requirement to review government records explicitly provides

that the reviews be conducted in compliance with the objectives and performance standards. If a particular source of information cannot be accessed within a reasonable time frame or within reasonable costs, then the information should be sought from other sources. In addition, if a particular source of information will only provide information that can more easily or readily be found elsewhere, the particular source does not have to be obtained or consulted. If application of the objectives and performance standards to the requirement to review government records results in an inability to provide necessary information (or information identified as necessary in the objectives for the final rule), then the lack of information should be documented as a data gap in the final report. In addition, the environment professional should comment on the significance the lack of any information has on his or her ability to identify conditions at the property that are indicative of releases or threatened releases of hazardous substances (in compliance with § 312.21(c)(2)).

In response to commenters who pointed out that it may be difficult to obtain or gain access to tribal government records, we point out that such records need only be searched for and reviewed in those instances where the subject property is located on or near tribal-owned lands. In these cases, it is important to attempt, within the scope of the rule's objectives and performance factors, to review such records. When such records are not available, necessary information should be sought from other sources. When no information is available and the objectives and performance factors of the final rule cannot be met and the result is a lack of information that may affect the environmental professional's ability to render an opinion regarding the environmental conditions of a property, the lack of information must be documented as a data gap in compliance with § 312.21(c)(2).

The final rule requires that the following types of government records or data bases of government records be reviewed to obtain information on the subject property and nearby properties necessary to meet the rule's objectives and performance standards:

1. Government records of reported releases or threatened releases at the subject property, including previously conducted site investigation reports.

2. Government records of activities, conditions, or incidents likely to cause or contribute to releases or threatened releases, including records documenting regulatory permits that were issued to current or previous owners or operators at the property for waste management activities and government records that identify the subject property as the location of landfills, storage tanks, or as the location for generating and handling activities for hazardous substances, pollutants, contaminants, petroleum and petroleum products, or controlled substances.

3. CERCLIS records—EPA's Comprehensive Environmental Response, Compensation, and Liability Information System (CERCLIS) database contains general information on sites across the nation and in the U.S. territories that have been assessed by EPA, including sites listed on the National Priorities List (NPL). CERCLIS includes information on facility location, status, contaminants, institutional controls, and actions taken at particular sites. CERCLIS also contains information on sites being assessed under the Superfund Program, hazardous waste sites and potential hazardous waste sites.

4. Government-maintained records of public risks—the all appropriate inquiries government records search should include a search for available records documenting public health threats or concerns caused by, or related to, activities currently or previously conducted at the site.

5. Emergency Response Notification System (ERNS) records—ERNS is EPA's data base of oil and hazardous substance spill reports. The data base can be searched for information on reported spills of oil and hazardous substances by state.

6. Government registries, or publicly available lists of engineering controls, institutional controls, and land use restrictions. The all appropriate inquiries government records search must include a search for registries or publicly available lists of recorded engineering and institutional controls and recorded land use restrictions. Such records may be useful in identifying past releases on, at, in, or to the subject property or identifying continuing environmental conditions at the property.

The final rule requires that government records be searched to identify information relative to the objectives and in accordance with the performance factors on: (1) Adjoining and nearby properties for which there are governmental records of reported releases or threatened releases (e.g., properties currently listed on the National Priorities List (NPL), properties subject to corrective action orders under the Resource Conservation and Recovery Act (RCRA), properties with reported releases from leaking underground storage tanks); (2) adjoining and nearby properties previously identified or regulated by a government entity due to environmental conditions at a site (e.g., properties previously listed on the NPL, former CERCLIS sites with notices of no further response actions planned (NFRAP)); and (3) adjoining and nearby properties that have government-issued permits to conduct waste management activities (e.g., facilities permitted to manage RCRA hazardous wastes).

In the case of government records searches for nearby properties, the final rule includes minimum search distances (e.g., properties located either within one mile or one-half mile of the subject property) for obtaining and reviewing records or data bases concerning activities and facilities located on nearby properties. The search distances are based upon our best judgment regarding the potential impacts that incidents or circumstances at an adjoining property may have on the subject property. With the exception of the required searches for institutional and engineering controls, the search distances finalized in today's rule are the search distances that were proposed in the proposed rule. For example, government records identifying properties listed on the NPL must be searched to obtain information on NPL sites located within one mile of the subject property. NPL sites located beyond one mile of a property most likely will have little or no impact on the environmental conditions at the subject property. In the case of two types of records, records of hazardous waste handler and generator records and permits, records of registered storage tanks, the final requirements specify that such records only be searched for information specific to the subject property and adjoining properties (the rule contains no requirement to search for these two types of government records for other nearby properties). The final rule requires that available lists of institutional controls and engineering controls only be searched for information on the subject property.

In the case of all the government records listed above and in the final rule in § 312.26, the requirements of this criterion may be met by searching data bases containing the same government records mentioned in the list above that are accessible and available through government entities or private sources. The review of actual records is not necessary, provided that the same information contained in the government records and required to

meet the requirements of this criterion and achieve the objectives and performance factors for these regulations is attainable by searching available data bases.

The final rule allows the environmental professional to adjust the search distances for reviewing government records of nearby properties based upon his or her professional judgment. Environmental professionals may consider one or more of the following factors when determining an alternative appropriate search distance:

- The nature and extent of a release;
- Geologic, hydrogeologic, or topographic conditions of the subject property and surrounding environment;
- Land use or development densities;
- The property type;
- Existing or past uses of surrounding properties;
- Potential migration pathways (e.g., groundwater flow direction, prevalent wind direction); or
- Other relevant factors.

The final rule requires environmental professionals to document the rationale for making any modifications to the required minimum search distances included in § 312.26 of the regulation.

T. What Are the Requirements for Visual Inspections of the Subject Property and Adjoining Properties?

Proposed Rule

The proposed rule required that an on-site visual inspection of the subject property be conducted as part of the all appropriate inquiries investigations, with one limited exception. The proposed on-site visual inspection requirements included requirements to inspect any facilities and improvements on the property as well as all areas where hazardous substances are or may have been used, stored, treated, handled, or disposed. In addition, the proposed rule included requirements to visually inspect adjoining properties. The proposal required that inspections of adjoining properties be conducted from the property line, public right-of-way, or other vantage point.

The proposed rule included a limited exception from the requirement to conduct the visual inspection ''on-site.'' The proposed exception provided that in unusual circumstances where an on-site visual inspection cannot be performed because of physical limitations, remote and inaccessible location, or another inability to obtain access to the property, provided good faith efforts are taken to obtain such access and access to the property could not be obtained, a visual inspection could be conducted from an off-site vantage point (e.g., property-line, airplane, public right-of-way). To qualify for the exception from the requirement to conduct the inspection on site, the proposed rule required that the environmental professional document the good faith efforts undertaken to gain access to the property and explain why such efforts were unsuccessful. The proposed rule also required that the environmental professional document what other sources of information were consulted to obtain information regarding the potential environmental conditions at the property and the significance of the failure to conduct the inspection on site on his or her ability to identify conditions indicative of releases or threatened releases of hazardous substances on, at, in, or to the subject property.

In the preamble to the proposed rule, EPA recommended that an environmental professional conduct the on-site visual inspection.

Public Comments

A few commenters stated that EPA should not recommend, as we did in the preamble to the proposed rule, that an individual meeting the definition of environmental professional conduct the on-site visual inspection. These commenters stated that anyone under the responsible charge or supervision of an environmental professional should be able to conduct the on-site visual inspection. Commenters stated, that by recommending in the preamble that the environmental professional conduct the on-site visual inspection, the Agency was effectively requiring an environmental professional to conduct the visual inspection. Other commenters expressed support for the Agency's recommendation.

A few other commenters thought the proposed exception from the requirement to conduct the visual inspection on site was ''broad'' and ''would increase the likelihood of inspections not being performed and contamination not being detected.'' These commenters expressed a concern that any exception from the requirement to conduct an on-site visual inspection could open the door to abuse and result in properties being transferred without being inspected. Commenters raised concerns that owners of uninspected properties could obtain liability protection by claiming to have fulfilled the requirements of all appropriate inquiries without knowledge of on-going releases at a property.

Final Rule

The final rule, at § 312.27, retains the proposed requirement that a visual on-site inspection be conducted of the subject property. The final visual on-site inspection requirements include requirements to inspect the facilities and any improvements on the property, as well as visually inspect areas on the property where hazardous substances may currently be or in the past may have been used, stored, treated, handled, or disposed of. We continue to assert that, and commenters agreed, that every all appropriate inquiries investigation must include an on-site visual inspection of the property. The on-site inspection of a property most likely will be an excellent source of information regarding indications of environmental conditions on a property. The final rule requires that a visual on-site inspection of the subject property be conducted in all but a few very limited cases. In addition, the final rule retains the proposed requirement that in those cases where physical limitations restrict the portions of the property that may be visually inspected, that the physical limitations encountered during the visual on-site inspection (e.g., weather conditions, physical obstructions) must be documented.

We note that persons conducting all appropriate inquiries with monies provided in a grant awarded under CERCLA section 104(k)(2)(B) must, depending on the terms and conditions of the grant or cooperative agreement, include within the scope of the on-site visual inspection an inspection of the facilities, improvements, and other areas of the property where pollutants, contaminants, petroleum and petroleum products, or controlled substances may currently be or in the past may have been used, stored, treated, handled, or disposed.

The visual on-site inspection of a property during the conduct of all appropriate inquiries may be the most important aspect of the inquiries and the primary source of information regarding the environmental conditions on the property. In all cases, every effort must be made to conduct an on-site visual inspection of a property when conducting all appropriate inquiries.

We understand that a prospective landowner, grantee, or environmental professional, in some limited circumstances, may not be able to obtain on-site access to a property. Extreme and prolonged weather conditions and remote locations can impede access to a property. A prospective landowner, grantee or environmental professional also could be unable to gain on-site

access to a property if the owner refuses to provide access to the party, even after the party exercises all good faith efforts to gain access to the property (e.g., seeking assistance from state government officials). Such circumstances may arise in cases where a local government becomes a last resort purchaser of a potentially-contaminated property that has little economic value. The unique nature of such transactions may result in a local government facing an uncooperative or recalcitrant property owner. Unlike commercial property transactions between private parties, where the parties' economic and legal liability interests and the ability to abandon the transaction can work in favor of the purchasing party's ability to gain access to a property prior to acquisition, property transactions between a private party and a local government may not afford the local government the same leverage, even if it is in the public interest to attain ownership of the property. This situation may occur when the local government seeks to assess, clean up, and revitalize an area, but the owner of the property is unreachable, unavailable, or otherwise unwilling to provide access to the property. In such limited circumstances, the public benefit attained from a government entity gaining ownership of a property may outweigh the need to gain on-site access to the property prior to the transfer of ownership.

The final rule requires, in unusual circumstances, that the prospective landowner or grantee make good faith efforts to gain access to the property. However, the mere refusal of a property owner to allow the prospective property owner or grantee to have access to the property does *not* constitute an unusual circumstance, absent the making of good faith efforts to otherwise gain access. The final rule, at § 312.10, defines ''good faith'' as ''the absence of any intention to seek an unfair advantage or to defraud another party; an honest and sincere intention to fulfill one's obligations in the conduct or transaction concerned.''

In those unusual circumstances where a prospective landowner, a grantee, or an environmental professional, after undertaking good faith efforts, cannot gain access to a property and therefore cannot conduct an on-site visual inspection, the final rule requires that the property be visually inspected, or observed, by another method, such as through the use of aerial photography, or be inspected, or observed, from the nearest accessible vantage point, such as the property line or a public road that runs through or along the property. In addition, the rule requires that the all appropriate inquiries report include documentation of efforts undertaken by the prospective landowner, grantee, or the environmental professional to obtain on-site access to the subject property and include an explanation of why good faith efforts to gain access to subject property were unsuccessful. The all appropriate inquiries report must include documentation of other sources of information that were consulted to obtain information necessary to achieve the objectives and performance factors. This documentation should include comments, from the environmental professional who signs the report, regarding any significant limitations on the ability of the environmental professional to identify conditions indicative of releases or threatened releases on, at, in, or to the subject property, that may arise due to the inability of the prospective landowner, grantee, or environmental professional to obtain on-site access to the property.

In those limited cases where an on-site visual inspection cannot be conducted prior to the date a property is acquired, we remind prospective landowners that protection from CERCLA liability depends upon the prospective landowner complying with all of the post-acquisition continuing obligations provided in the statute. Therefore, to ensure that adequate information is attained about a property to ensure that the property owner can fulfill these obligations, we recommend that once a property is purchased, the property owner conduct an on-site visual inspection of the property once the property is acquired, if it could not be conducted prior to acquisition. Such an inspection may provide important information necessary for the property owner to fully comply with the other statutory provisions, including on-going obligations, governing the CERCLA liability protections.

We disagree with the commenters who argued that the exception from the requirement to conduct the visual inspection on-site is ''broad.'' We point out that the exception is limited to the requirement that the visual inspection be conducted on-site. In all cases where the exception applies, the visual inspection must still be conducted from another vantage point. In addition, the exception is limited to only those circumstances where all good faith efforts are made to gain access the property. The final rule requires that all good faith efforts to gain access be documented and requires that the environmental professional comment on the consequences that the inability to gain access to the property may have on his or her ability to render an opinion on property conditions that may be indicative of releases or threatened releases on, at, in, or to the property. The exception is very limited in scope and the documentation requirements should limit the use of the exception as well as provide the prospective landowner with useful information for determining the potential need for further investigations of the property after acquisition.

The final rule also requires that the all appropriate inquiries investigation include visual inspections of properties that adjoin the subject property. Visual inspections of adjoining properties may provide excellent information on the potential for the subject property to be affected by contamination migrating from adjoining properties. Visual inspections of adjoining properties may be conducted from the subject property's property line, one or more public rights-of-way, or other vantage point (e.g., via aerial photography). Where practicable, a visual on-site inspection is recommended and may provide greater specificity of information. The visual inspections of adjoining properties must include observing areas where hazardous substances currently may be, or previously may have been, stored, treated, handled, or disposed. Visual inspections of adjoining properties otherwise also must be conducted to achieve the objectives and performance goals for all the appropriate inquiries. Physical limitations to the visual inspections of adjoining properties should be noted.

As explained in the preamble to the proposed rule, EPA and the Negotiated Rulemaking Committee considered, when developing the proposed rule, requiring that all activities in the all appropriate inquiries investigation to be conducted by persons meeting the proposed definition of an environmental professional. Requiring that an environmental professional conduct all activities could ensure that all data collection and investigations are conducted in a manner and to a degree of specificity that allows the environmental professional to make best use of all information in forming opinions and conclusions regarding the environmental conditions at a property. However, after careful review of the specific activities included in the statutory criteria and conducting an assessment of the costs and burdens of such a requirement, EPA and the Committee concluded that it is not necessary for each and every regulatory requirement to be conducted by an environmental professional. As outlined

in section IV.H of this preamble, today's final rule, as did the proposed rule, allows for certain aspects of the inquiries to be conducted solely by the prospective landowner or grantee, while providing that all other aspects be conducted under the supervision or responsible charge of the environmental professional. Among the activities required to be conducted under the supervision or responsible charge of an environmental professional is the on-site visual inspection.

It continues to be EPA's recommendation that visual inspections of the subject property and adjoining properties be conducted by an individual who meets the regulatory definition of an environmental professional. Although many other aspects of the all appropriate inquiries may be conducted sufficiently and accurately by individuals other than an environmental professional (e.g., a research associate or librarian may be well qualified to search government records, an attorney may be well qualified to conduct a search for an environmental lien), EPA believes that an environmental professional is best qualified to conduct a visual inspection and locate and interpret information regarding the physical and geological characteristics of the property as well as information on the location and condition of equipment and other resources located on the property. EPA recognizes that other individuals who do not meet the regulatory definition of an environmental professional, particularly when these individuals are conducting such activities under the supervision or responsible charge of an environmental professional, may have the required skills and knowledge to conduct an adequate on-site visual inspection. However, EPA believes that the professional judgment of an individual meeting the definition of an environmental professional is important to ensuring that all circumstances at the property that are indicative of environmental conditions and potential releases or threatened releases are properly identified and analyzed. An environmental professional is best qualified for identifying such situations and conditions and rendering a judgment or opinion regarding the potential existence of conditions indicative of environmental concerns.

Although some commenters stated that EPA should not recommend that the visual inspection be conducted by a person meeting the definition of environmental professional, we point out that other commenters stated their support for our recommendation and some even stated that EPA should require in the regulation that the inspection be conducted by an environmental professional. We remain convinced that the on-site visual inspection of the property can be the single most important source of information regarding the environmental conditions of a property and that an individual meeting the regulatory definition of environmental professional is best able to interpret such observations of a property and ascertain the probability of conditions indicative of releases or threatened releases of hazardous substances being present at the property. In addition, we point out that the definition of environmental professional included in the final rule is less stringent than the proposed definition. Therefore, commenter concerns regarding any significant cost burdens associated with the environmental professional conducting the on-site visual inspection may be alleviated. We emphasize that EPA is recommending that the on-site visual inspection be conducted by an individual who meets the definition of environmental professional included in the final rule; it is not a requirement that the inspection be conducted by an environmental professional. The rule requires only that the inspection be conducted by an individual who is under the supervision or responsible charge of an individual meeting the definition of environmental professional. EPA agrees that if the final rule required that the on-site visual inspection be conducted by an individual meeting the definition of an environmental professional, the requirement could impose undue burdens in certain circumstances. In addition, there may be circumstances that in the best professional judgment of an environmental professional, another person under the responsible charge of the environmental professional may be more qualified to conduct the on-site inspection. To allow for flexibility and the application of professional judgment to specific circumstances, EPA continues to recommend that an environmental professional conduct the on-site inspection, but the Agency is not requiring that the inspection be conducted by an environmental professional.

U. What Are the Requirements for the Inclusion of Specialized Knowledge or Experience on the Part of the ''Defendant?''

Because the conduct of all appropriate inquiries is one element of a legal defense to CERCLA liability, the statute refers to the prospective landowner, or the user of the all appropriate inquiries investigation, as the ''defendant.'' This ensures that any information or special knowledge held by the prospective landowner with regard to a property and its conditions be included in the pre-acquisition inquiries and be considered, along with all information collected during the conduct of all appropriate inquiries, when an environmental professional renders a judgment or opinion regarding conditions indicative of environmental conditions indicative of releases or potential releases of hazardous substances on, at, in, or to the subject property. It is recommended that this information be revealed to the parties conducting the all appropriate inquiries so that any specialized knowledge may be taken into account during the conduct of the required aspects of the all appropriate inquiries.

Congress first added the innocent landowner defense to CERCLA in the Superfund Amendments and Reauthorization Act (SARA) of 1986. The Brownfields Amendments amended the innocent landowner defense and added to CERCLA the bona fide prospective purchaser and the contiguous property owner liability protections to CERCLA liability. The 1986 SARA amendments to CERCLA established that among other elements necessary for a defendant to successfully assert the innocent landowner defense, a defendant must demonstrate that he or she had, on or before the date of acquisition of the property in question, made all appropriate inquiries into previous ownership and uses of the property. Congress directed courts evaluating a defendant's showing of all appropriate inquiries to take into account, among other things, ''any specialized knowledge or experience on the part of the defendant.'' Nothing in today's rule changes the nature or intent of this requirement as it has existed in the statute since 1986.

Proposed Rule

The proposed rule retained, as part of the federal all appropriate inquiries requirements, the consideration of any specialized knowledge or experience of the prospective landowner (or grantee if the grantee is or will be the property owner). The proposed rule did not extend this requirement beyond what already was required under CERCLA and established through case law. The proposed rule required that all appropriate inquiries include the consideration of specialized knowledge held by the prospective landowner or grantee with regard to the subject property, the area surrounding the subject property, the conditions of

adjoining properties, as well as other experience relative to the inquiries that may be applicable to identifying conditions indicative of releases or threatened releases at the subject property. The proposed rule also required that the results of the inquiries take into account any specialized knowledge related to the property, surrounding areas, and adjoining properties held by the persons responsible for undertaking the inquiries, including any specialized knowledge on the part of the environmental professional.

Public Comments

EPA did not receive significant comment on the proposed requirements for considering the specialized knowledge or experience on the part of the defendant. A few commenters mentioned that the proposed requirements would result in the all appropriate inquiries investigations having to include interviews with all previous owners and occupants of the property. These commenters may have mistakenly interpreted the proposed provisions as requiring that the specialized knowledge of all current owners and occupants be considered as part of the all appropriate inquiries investigation. We clarify that only the specialized knowledge of the prospective landowner or grantee, and the environmental professional overseeing the conduct of the inquiries need be considered.

Final Rule

The final rule retains the proposed provisions governing the consideration of specialized knowledge or experience on the part of the prospective landowner (or grantee) and the environmental professional conducting the all appropriate inquiries investigation on the part of the prospective landowner or grantee.

As provided in the preamble to the proposed rule, existing case law related to the innocent landowner defense shows that courts appear to have interpreted the ''specialized knowledge'' factor to mean that the professional or personal experience of the defendant may be taken into account when analyzing whether the defendant made all appropriate inquiries. For example, in *Foster* v. *United States*, 922 F. Supp. 642 (D. D.C. 1996), the owner of a property formerly owned by the General Services Administration and contaminated by, among other things, lead, mercury and PCBs, brought an action against the United States and District of Columbia, prior owners or operators of the site. The plaintiff was a principal in Long & Foster companies and purchased the property through a general partnership, and received it by quitclaim deed. The innocent landowner defense requires a property owner to demonstrate that when he or she purchased a property, he or she did not know and had no reason to know of contamination at, on, in, or to the property. The court rejected the plaintiff's claim to the innocent landowner defense based in part on the plaintiff's specialized knowledge. The court found that his specialized knowledge included his position at Long & Foster, which did hundreds of millions of dollars of commercial real estate transactions, and his position as a partner in at least 15 commercial real estate partnerships. The partnership was involved as an investor in a number of real estate transactions, some of which involved industrial or commercial or mixed-use property. The court ruled that ''it cannot be said that [the partnership] is a group unknowledgeable or inexperienced in commercial real estate transactions.'' *Foster*, 922 F. Supp. at 656.

In *American National Bank and Trust Co. of Chicago* v. *Harcros Chemicals, Inc.*, 1997 WL 281295 (N.D. Ill. 1997), the plaintiff was a company ''involved in brownfields development, purchasing environmentally distressed properties at a discount, cleaning them up, and selling them for a profit.'' *American National Bank*,1997 WL 281295 at *4. As a counter-claim defendant, the company asserted it was an innocent landowner and therefore not liable pursuant to CERCLA. The court found that among other reasons the defense failed because the company possessed specialized knowledge. The court ruled that the company was an expert environmental firm and possessed knowledge that should have alerted it to the potential problems at the site.

The final rule requires that the specialized knowledge of prospective landowners and the persons responsible for undertaking the all appropriate inquiries, including grantees, be taken into account when conducting the all appropriate inquiries for the purposes of identifying conditions indicative of releases or threatened releases at a property. However, as evidenced by the case law cited above, the determination of whether or not the all appropriate inquiries standard is met with regard to specialized knowledge (as well as in regard to all the criteria) remains within the discretion of the courts.

V. What Are the Requirements for the Relationship of the Purchase Price to the Value of the Property, if the Property Was Not Contaminated?

Congress included in the statutory criteria for all appropriate inquiries a requirement to consider the relationship of the purchase price of a property to the value of the property, if the property was not contaminated. The criteria was retained in the criteria included in the Brownfields Amendments from the all appropriate inquiries provisions of the innocent landowner defense established by Congress in the 1986 amendments to CERCLA.

Proposed Rule

The proposed rule required that the prospective landowner or grantee consider whether or not the purchase price of the property reflects the fair market value of the property, assuming that the property is not contaminated. The proposed rule required that the prospective landowner or grantee consider whether any differential between the purchase price and the value of the property is due to the presence of releases or threatened releases of hazardous substances at the property. There may be many reasons that the price paid for a particular property is not an accurate reflection of the fair market value. The all appropriate inquiries investigation need only include a consideration of whether a significant difference between the price paid for a property and the fair market value of a property, if the property were not contaminated, is an indication that the property may be contaminated.

Public Comments

Many commenters asserted that an environmental professional should not be required to consider the relationship of the purchase price to the value of the property as part of the all appropriate inquiries investigation. Concerns raised by commenters include whether environmental professionals are qualified to assess the fair market value of a property. Some commenters thought that a requirement that prospective landowners or environmental professionals consider the relationship of the purchase price of property to the value of the property could violate federal or state laws governing property appraisals. Some commenters argued that the all appropriate inquiries investigation should not include the requirement to consider the relationship of the purchase price to the value of the property because the fair market value

is not always easily ascertainable. Other commenters requested that the preamble to the final rule include a recommendation that an appraisal be performed to determine a property's fair market value. In addition, commenters requested that in cases where an appraisal is conducted to determine the fair market value of a property, the rule should require that it meet the Uniform Standards of Professional Appraisal Practice. Still other commenters supported including the requirement in the final rule, but asked the Agency to require prospective landowners to obtain a property appraisal conducted by a trained or certified real estate appraiser. Some commenters stated that prospective landowners should not be required to divulge information on the price paid for a property to the environmental professional or other third party.

Final Rule

The final rule retains the requirement to consider the relationship of the purchase price to the fair market value of the property, if the property were not contaminated. The requirement is part of the statutory criteria established by Congress and has been part of the statutory provisions governing all appropriate inquiries, within the innocent landowner defense, since 1986. Today's rule does not change the previously existing provision. As did the proposed rule, today's final rule allows for this criterion to be conducted by the prospective landowner or the grantee or undertaken as part of the inquiry by an environmental professional. If an environmental professional is not qualified to consider the relationship of the purchase price to the value of the property, the prospective landowner or grantee may undertake the task or hire another third party to make the comparison of price and fair market value and consider whether any differential is due to potential environmental contamination.

If the relationship of the purchase price to the fair market value of the property, assuming the property is not contaminated, is determined by the prospective landowner or grantee, or other agent who is not under the supervision or responsible charge of the environmental professional, the final rule allows for, but does not require, the information that is collected and the determination made by or on the behalf of the prospective landowner to be provided to the environmental professional. If the information is provided to the environmental professional, he or she can then make use of such information during the conduct of the all appropriate inquiries and when rendering conclusions or opinions regarding the environmental conditions of the property. If the information is not provided to the environmental professional and the environmental professional determines that the lack of such information affects his or her ability to identify conditions indicative of releases or threatened releases of hazardous substances on, at, in, or to the property, then the environmental professional should identify the lack of information as a data gap and comment on its significance in the written report for the all appropriate inquiries investigation.

The rule does not require that a real estate appraisal be conducted to achieve compliance with this criterion. Although some commenters requested that the final rule require that a formal appraisal be conducted and we acknowledge that there may be potential value in conducting an appraisal, we determined that a formal appraisal is not necessary for the prospective landowner or grantee to make a general determination of whether the price paid for a property reflects its fair market value. In the case of many property transactions, a formal appraisal may be conducted for other purposes (*e.g.*, to establish the value of the property for the purposes of establishing the conditions of a mortgage or to provide information of relevance where a windfall lien may be filed). In cases where the results of a formal property appraisal are available, the appraisal results may serve as an excellent source of information on the fair market value of the property.

In cases where the results of a formal appraisal are not available, the determination of fair market value may be made by comparing the price paid for a particular property to prices paid for similar properties located in the same vicinity as the subject property, or by consulting a real estate expert familiar with properties in the general locality and who may be able to provide a comparability analysis. The objective is not to ascertain the exact value of the property, but to determine whether or not the purchase price paid for the property generally is reflective of its fair market value. Significant differences in the purchase price and fair market value of a property should be noted and the reasons for any differences also should be noted.

Although some commenters requested that EPA be more explicit in the final rule in requiring that the comparison of the purchase price to the fair market value of the property be conducted by the prospective landowner or grantee (and not the environmental professional), we believe that the decision of who conducts the comparison may be best left up to the judgment of the individual prospective landowner (or grantee) and environmental professional. The final rule provides in § 312.22 that the comparison of the purchase price to the fair market value of the property, if it were not contaminated, can fall outside the inquiries conducted by the environmental professional. The criteria to consider the relationship of the purchase price to the fair market value of the property, if it was not contaminated is not included as part of the requirements governing the ''results of an inquiry by an environmental professional'' (§ 312.21). Therefore, the requirement may be conducted by the prospective landowner or grantee, his or her attorney or agent, or the environmental professional. Given that a prospective landowner or grantee can conduct the comparison of the purchase price and the fair market value of the property or hire another agent other than the environmental professional to conduct this task, we conclude that commenter concerns regarding the prospective landowner (or grantee) having to divulge the price paid for a property to the environmental professional are unfounded.

W. What Are the Requirements for Commonly Known or Reasonably Ascertainable Information About the Property?

Commonly known or reasonably ascertainable information includes information about a property that generally is known to the public within the community where the property is located and can be easily sought and found from individuals familiar with the property or from easily attainable public sources of information. As mentioned above, the Brownfields Amendments to CERCLA amended the innocent landowner defense previously added to CERCLA in 1986. In addition, the Brownfields Amendments added to CERCLA the bona fide prospective purchaser and the contiguous property owner liability protections. The 1986 amendments to CERCLA established, that among other elements necessary for a defendant to successfully assert the innocent landowner defense, a defendant must take into account commonly known or reasonably ascertainable information about the property. Congress retained this criterion as part of the all appropriate inquiries requirements included in the Brownfields Amendments. Today's rule does not change the nature or intent of

this requirement as it has existed in the statute since 1986.

Proposed Rule

The proposed rule required that all appropriate inquiries include the collection and consideration of commonly known information about the potential environmental conditions at a property. The proposed rule required both the prospective landowner or grantee and the environmental professional obtain and consider commonly known or reasonably ascertainable information during the conduct of the all appropriate inquiries investigation. The proposed rule also provided a list of potential sources of such information.

Public Comments

A few commenters expressed concern that the requirement to consider commonly known or reasonably ascertainable information about a property renders the all appropriate inquiries requirements too vague and open-ended. Commenters stated that the requirement is broad and may result in the need to interview a large number of people and consult a wide variety of sources of information. One commenter expressed a preference that the federal standards include only a checklist of specific sources of information that must be consulted. A few commenters thought the list of potential sources of commonly known information included in the proposed rule was too broad.

Final Rule

The final rule retains the proposed provisions requiring that prospective landowners and environmental professionals consider commonly known or reasonably ascertainable information about a property when conducting all appropriate inquiries. This information may be ascertained from the owner or occupant of a property, members of the local community, including owners or occupants of neighboring properties to the subject property, local or state government officials, local media sources, and local libraries and historical societies. In many cases, this information may be incidental to other information collected during the inquiries, and separate or distinct efforts to collect the information may not be necessary. Information about a property, including its ownership and uses, that is commonly known or reasonably ascertainable within the community or neighborhood in which a property is located may be valuable to identifying conditions indicative of releases or threatened releases at the subject property. Such information, if not collected during the course of collecting other information necessary to complete the all appropriate inquiries investigation, may be obtained by interviewing community officials and other residents of the locality. For example, neighboring property owners and local community members may have information regarding undocumented uses of a property during periods when the property was idle or abandoned. Local community sources may be good (i.e., reasonably ascertainable) sources of commonly known information on uses of a property and activities conducted at a property, particularly in the case of abandoned properties.

The collection and use of commonly known information about a property may be done in connection with the collection of all other required information for the purposes of achieving the objectives and performance factors contained in § 312.20. Persons undertaking the all appropriate inquiries may collect commonly known or reasonably ascertainable information on the subject property from a variety of sources, including sources located in the community in which the property is located. The opinion provided by an environmental professional regarding the environmental conditions of a property and included in the all appropriate inquiries report should be based upon a balance of all information collected, including commonly known or reasonably ascertainable information about the property. The potential sources of commonly known or reasonably ascertainable information provided in the proposed rule and retained in the final rule are provided as suggestions for where such information may be found and the list provided is not meant as an exhaustive list of sources that must be consulted. Commonly known information may be collected from other sources and may be most easily collected during the conduct of other aspects of the all appropriate inquiries investigation (*e.g.*, interviews, reviews of historical sources of information, reviews of governmental records). The requirement is not meant to require exhaustive data collection efforts, as some commenters asserted. The intent of the requirement is to establish that a prospective landowner or grantee and an environmental professional conducting all appropriate inquiries on his or her behalf must make efforts to collect and consider information about a property that is commonly known within the local community or that can be reasonably ascertained.

There is some case law, related to the innocent landowner defense, that provides guidance on how a court may rule with regard to the need to consider commonly known or reasonably ascertainable information about the property. For example, in *Wickland Oil Terminals* v. *Asarco, Inc.*, 1988 WL 167247 (N.D. Cal. 1988), the court noted that Wickland was aware of potential water quality problems at the subject property due to large piles of mining slag stored at the property, even though Wickland argued that previous owners withheld such information, because the information was available from other sources consulted by Wickland prior to purchasing the property, including the Regional Water Quality Control Board and a consulting firm hired by Wickland. Such information was commonly known by local sources and therefore should have been considered by Wickland during its conduct of all appropriate inquiries.

In *Hemingway Transport Inc.* v. *Kahn*, 174 FR 148 (Bankr. D. Mass. 1994), the court ruled against an innocent landowner claim because it found ''that had [the defendants] exerted a modicum of effort they may easily have discovered information that at a minimum would have compelled them to inspect the property further * * * the [defendants] could have taken a few significant steps, literally, to minimize their liability and discover information about the property * * *'' The court noted that one action the defendants should have taken to collect available information about the property included phone calls to city officials to inquire about conditions at the property.

X. What Are the Requirements for ''The Degree of Obviousness of the Presence or Likely Presence of Contamination at the Property, and the Ability to Detect the Contamination by Appropriate Investigation?''

Proposed Rule

The proposed rule required that the inquiries conducted by a prospective landowner (or grantee) and environmental professional take into account all the information collected during the conduct of the all appropriate inquiries in considering the degree of obviousness of and ability to detect the presence of a release or threatened release of hazardous substances at, in, on, or to a property. In addition, the proposed rule required the environmental professional to provide an opinion regarding additional appropriate investigation, if any may be

necessary in his or her opinion to determine the environmental conditions of the property.

Public Comments

A few commenters asserted that the proposed requirements regarding the degree of obviousness of the presence or likely presence of contamination at the property, and the ability to detect the contamination by appropriate inquiry were too open-ended. Also, a few commenters suggested that the final rule should include requirements to conduct sampling and analysis to meet the ''ability to detect contamination by appropriate investigation'' portion of the statutory criteria. However, commenters overwhelmingly agreed that the standards for all appropriate inquiries should not require sampling and analysis.

Final Rule

The final rule requires that persons conducting all appropriate inquiries consider all the information collected during the conduct of the inquiries in totality to ascertain the potential presence of a release or threatened release at the property. Persons conducting all appropriate inquiries, following the collection of all required information, must assess whether or not an obvious conclusion may be drawn that there are conditions indicative of a release or threatened release of hazardous substances (or other pollutants, contaminants, petroleum or petroleum products, and controlled substances) on, at, in, or to the property. In addition, the rule requires parties to consider whether or not the totality of information collected prior to acquiring the property indicates that the parties should be able to detect a release or threatened release on, at, in, or to the property. The final rule also retains the proposed requirement that the environmental professional include as part of the results of his or her inquiry an opinion regarding additional appropriate investigation, if any may be necessary.

We interpret the statutory criterion to require consideration of information already obtained during the conduct of all appropriate inquiries investigation and not as a requirement to collect additional information. We do not agree with commenters who asserted that the criterion is open-ended. In fact, we see this criterion as providing direction on how all of the information collected while carrying out the other criteria and regulatory requirements must be viewed comprehensively. After collecting and considering all the information required to comply with the rule's objectives and performance standards, all the information should be considered in total to determine whether or not there are indications of releases or threatened releases of hazardous substances on, at, in, or to the property. In addition, the environmental professional should provide an opinion regarding whether or not additional investigation is necessary to detect potential contamination at the site, if in his or her opinion there are conditions indicative of releases or threatened releases of hazardous substances.

The previous innocent landowner defense (added to CERCLA in 1986) required a court to consider the degree of obviousness of the presence or likely presence of contamination at a property, and the ability of the defendant (i.e., the landowner) to detect the contamination by appropriate investigation. Nothing in today's rule changes the nature or intent of this requirement as it has existed in the statute since 1986.

Case law relevant to this criterion indicates that defendants may not be able to claim an innocent landowner defense if a preponderance of evidence available to a prospective landowner prior to acquiring the property indicates that the defendant should have concluded that there is a high likelihood of contamination at the site. In some cases (e.g., *Hemingway Transport Inc.* v. *Kahn*, 174 F.R. 148 (Bankr. D. Mass. 1994), and *Foster* v. *United States*, 922 F. Supp. 642 (D.D.C. 1996), courts have ruled that if a defendant had done a bit more visual inspection or further investigation, based upon information available to the defendant prior to acquiring the property, it would have been obvious that the property was contaminated. In *Foster* v. *United States*, the court determined that the innocent landowner defense was not available based in part on the fact that the partnership presumed the site was free of contamination based upon cursory visual inspections despite evidence in the record that, at the time of the sale, the soil was visibly stained by PCB-contaminated oil. In addition, although the property was located in a run-down industrial area, the defendant did no investigation into the environmental conditions at the site prior to acquiring the property.

EPA also notes that in *U.S.* v. *Domenic Lombardi Realty, Inc.,* 290 F. Supp. 2d 198, 211 (D.R.I. 2003), the court held that the defendant did not qualify for the innocent landowner defense. The defendant could not show he had ''no reason to know'' of contamination at the property or that he had performed all appropriate inquiries in accordance with ''good commercial or customary practices.'' The court also found that the defendant had not performed even a minimal environmental assessment of the site despite having learned that the property had been used as an automobile scrapyard. The court noted the distinction between Phase I and Phase II environmental assessments and credited the testimony of the United States' expert who concluded that, under the circumstances of this case, the defendant should have conducted a Phase II assessment. *Id.* at 203–04.

With regard to the conduct of sampling and analysis, today's final rule does not require sampling and analysis as part of the all appropriate inquiries investigation. However, sampling and analysis may be valuable in determining the possible presence and extent of potential contamination at a property. In addition, the fact that the all appropriate inquiry standards do not require sampling and analysis does not prevent a court from concluding that, under the circumstances of a particular case, sampling and analysis should have been conducted to meet ''the degree of obviousness of the presence or likely presence of contamination at the property, and the ability to detect the contamination by appropriate investigation'' criterion and obtain protection from CERCLA liability. Prospective landowners should keep in mind that the conduct of all appropriate inquiries prior to acquiring a property is only one requirement that he or she must comply with to assert protection from CERCLA liability. The statute requires that persons, after acquiring a property, comply with continuing obligations to take reasonable steps to stop on-going releases at the property, prevent any threatened future releases, and prevent or limit any human, environmental, or natural resource exposure to any previously released hazardous substances (these criteria are summarized in detail in section II.D. of this preamble). In certain instances, depending upon site-specific circumstances and the totality of the information collected during the all appropriate inquiries prior to the property acquisition, it may be necessary to conduct sampling and analysis, either pre-or post-acquisition, to fully understand the conditions at a property, and fully comply with the statutory requirements for the CERCLA liability protections. In addition, sampling and analysis may help explain existing data gaps. Prospective landowners should be mindful of all the statutory requirements for obtaining the CERCLA liability protections when

considering whether or not to conduct sampling and analysis prior to or after acquiring a property. Today's final regulation does *not* require that sampling and analysis be conducted as part of the all appropriate inquiries investigation.

V. Statutory and Executive Order Reviews

A. Executive Order 12866: Regulatory Planning and Review

Under Executive Order 12866 (58 FR 51735), the Agency must determine whether this regulatory action is ''significant'' and therefore subject to formal review by the Office of Management and Budget (OMB) and to the requirements of the Executive Order. The Executive Order defines ''significant regulatory action'' as one that is likely to result in a rule that may: (1) Have an annual effect on the economy of $100 million or more or adversely affect in a material way the economy, a sector of the economy, productivity, competition, jobs, the environment, public health or safety, or state, local, or tribal governments or communities; (2) create a serious inconsistency or otherwise interfere with an action taken or planned by another agency; (3) materially alter the budgetary impact of entitlements, grants, user fees, or loan programs or the rights and obligations of recipients thereof; or (4) raise novel legal or policy issues arising out of legal mandates, the President's priorities, or the principles set forth in the Executive Order.

Pursuant to the terms of Executive Order 12866, it has been determined that today's final rule is a ''significant regulatory action'' because this rule contains novel policy issues, although it is not economically significant. As such, this action was submitted to OMB for review. Changes made in response to OMB suggestions or recommendations are documented in the docket for today's rule.

To estimate the economic effects of today's final rule, we conducted an evaluation of the potential effects of this rule on the universe of prospective landowners who may chose to comply with the provisions of today's final rule to obtain protection from CERCLA liability for potential releases and threatened releases of hazardous substances that may exist at properties they intend to purchase. The results of this analysis are included in the document titled ''Economic Impact Analysis for the Final All Appropriate Inquiries Regulation,'' which is included in the docket for today's final rule. Based upon the results of the Economic Impact Analysis (EIA), EPA has determined that this final rule will have an annual effect on the economy of less than $100 million. The annualized benefits associated with the final rule have not been monetized but are identified and summarized in the EIA for the all appropriate inquiries rule.[2]

1. Methodology

The value of any regulatory action is traditionally measured by the net change in social welfare that it generates. The EIA conducted in support of today's rule examines both costs and qualitative benefits in an effort to assess the overall net change in social welfare. The primary focus of the EIA document is on compliance costs and economic impacts. Below, EPA summarizes the analytical methodology and findings for the all appropriate inquiries rule. The information presented is derived from the EIA.

The all appropriate inquiries regulation potentially will apply to most commercial property transactions. The requirements will be applicable to any public or private party, who may potentially claim protection from CERCLA liability as an innocent landowner, a bona fide prospective purchaser, or a contiguous property owner. However, the conduct of all appropriate inquiries, also known as environmental due diligence or Phase I Environmental Site Assessment, is not new to the commercial property market. Prior to the Brownfields Amendments to CERCLA, commercial property transactions often included an assessment of the environmental conditions at properties prior to the closing of any real estate transaction whereby ownership was transferred for the purposes of confirming the conditions at the property or to establish an innocent landowner defense should environmental contamination be discovered after the property was acquired. The process most prevalently used for conducting all appropriate inquiries, or environmental site assessments, is the process developed by ASTM International (formerly known as the American Society for Testing and Materials) and entitled ''E1527, Standard Practice for Environmental Site Assessments: Phase I Environmental Site Assessment Process.'' In addition, some properties, particularly in cases where the subject property is assumed not to be contaminated or was never used for industrial or commercial purposes, were assessed using a less rigorous process developed by ASTM International, sometimes referred to as a ''transaction screen'' and entitled ''E1528, Standard Practice for Environmental Site Assessments: Transaction Screen Process.''

Our first step in assessing the economic impacts of the rule was to establish a baseline to represent the relevant aspects to the commercial real estate market in the absence of any changes in regulations. Because under existing conditions almost all commercial property transactions are accompanied by either an environmental site assessment (ESA) conducted in accordance with ASTM E1527–2000 or a transaction screen as specified in ASTM E1528, it was assumed these practices would continue even in the absence of the all appropriate inquiries regulation. The numbers of each type of assessment were estimated on the basis of industry data for recent years, with recent growth rates in transactions assumed to continue for the 10-year period covered by the EIA. An adjustment in the relative numbers of ESAs and transaction screens was made to account for the fact that, under the rule, an ESA will provide more certain protection from liability. This adjustment was made by comparing shifts between the two procedures that occurred when the Brownfields Amendments established the ASTM E1527–2000 standard as the interim standard for all appropriate inquiries, and thus as one requirement for qualifying as an innocent landowner, bona fide prospective purchaser, or contiguous property owner.

We then considered the requirements included in the final rule and compared them to the requirements for environmental site assessments conducted under the ASTM E1527–2000 and ASTM E1528 standards.

When compared to the ASTM E1527–2000 standard (i.e., the baseline standard), today's final rule is expected to result in a reduced burden for the conduct of interviews in those cases where the subject property is abandoned; increased burden in those cases where past owners or occupants need to be interviewed; increased burden associated with documenting recorded environmental cleanup liens; increased burden for documenting the reasons for the price and fair market value of a property in those cases where the purchase price paid for the subject property is significantly below the fair

[2] The document titled ''The Economic Impact Analysis for the Final All Appropriate Inquiries Regulation'' includes (1) the EIA conducted for the proposed rulemaking and (2) the Addendum to the EIA. The cost estimates presented in the Addendum are the estimated costs of the final all appropriate inquiries regulation.

market value of the property; and increased burden for recording information about the degree of obviousness of contamination at a property.

To estimate the changes in costs resulting from the rule, we developed a costing model. This model estimates the total costs of conducting site assessments as the product of costs per assessment, numbers of assessments per year, and the number of years in the analysis. The costs per assessment, in turn, are calculated by dividing each assessment into individual labor activities, estimating the labor time associated with each, and assigning a per-hour labor cost to each activity on the basis of the labor category most appropriate to that activity. Labor times and categories are assumed to depend on the size and type of property being assessed, with the nationwide distribution of properties based on data from industry on environmental sites assessments and brownfield sites.[3] The estimates and assignments of categories are made based on the experience of professionals who have been involved in large numbers of site assessments, and who are therefore skilled in cost estimation for the relevant activities. Other costs, such as reproduction and the purchase of data, are added to the labor costs to form the estimates of total costs per assessment. These total costs, stratified by size and type of property, are then multiplied by estimated numbers of assessments of each size and type to generate our estimates of total annual costs. The model was tested by comparing its results to industry-wide estimates of average price of conducting assessments under baseline conditions, and generally found to agree. The difference between the estimated cost to comply with the final rule and the estimated cost in the baseline constitutes our estimate of the incremental regulatory costs.

The EIA provides a qualitative assessment of the benefits of the all appropriate inquiries rule. The benefits discussed are those that may be attributed to an increased level of certainty with regard to CERCLA liability provided to prospective purchasers of potentially contaminated properties, including brownfields, who comply with the provisions of the rule and the other statutory provisions associated with the liability protections. The basic premise for associating certain benefits to the rule is the expectation that the level of certainty provided by the liability protections may result in increased brownfields property transactions. However, it is difficult to predict how many additional transactions may occur that involve brownfields properties in direct response to the increased certainty of the liability protections. It also is difficult to obtain data on changes in behaviors and practices of prospective landowners in response to the liability protections. Therefore, EPA made no attempt to quantify potential benefits or compare the benefits to estimated incremental costs.

The Agency believes that increasing property transactions involving brownfields and other contaminated and potentially contaminated properties and improving information about environmental conditions at these properties may provide additional indirect benefits such as increased numbers of cleanups, reduced use of greenfields, potential increases in property values, and potential increases in quality of life measures (*e.g.*, decreases in urban blight, reductions in traffic, congestion, and reduced pollution due to mobile source emissions). However, as stated above, the benefits of the rule are considered only qualitatively, due to the difficulty of predicting how many additional brownfields and contaminated property transactions may occur in response to the increased certainty of liability protections provided by the rule, as well as the difficulty in getting data on changes in behaviors and practices in response to the availability of the liability protections. EPA is confident that the new liability protections afforded to prospective landowners, if they comply with the all appropriate inquiries provisions, will result in increased benefits. EPA is not able to quantify, with any significant level of confidence, the exact proportion of the benefits attributed only to the availability of the liability protections and the all appropriate inquiries regulations. For these reasons, the costs and benefits could not be directly compared.

2. Summary of Regulatory Costs in Proposed Rule

For a given property, the costs of compliance with the all appropriate inquiries rule relative to the baseline depend on whether that property would have been assessed, in absence of the all appropriate inquiries regulation, with an ASTM E1527–2000 assessment process or with the simpler ASTM E1528 transaction screen. EPA estimated the average incremental cost of the proposed rule relative to conducting an ASTM E1527–2000 to be between $41 and $47. For the small percentage of cases for which a transaction screen would have been preferred to the ASTM E1527–2000 in the baseline, but which would, as a result of the proposed rule, require an assessment in compliance with the all appropriate inquiries rule, the average incremental cost was estimated to be between $1,448 and $1,454. We estimated that approximately 97 percent of property transactions will bear only the incremental cost of the rule relative to the ASTM E1527–2000 process. Therefore, the weighted average incremental cost of the proposed rule, per transaction, was estimated to be fairly low, between $84 and $89.

3. Public Comments on EIA for Proposed Rule

EPA received a number of public comments on the EIA conducted to assess the potential costs and impacts of the proposed rule. We summarized the public comments received related to the cost and economic impacts in the document titled ''Addendum to Economic Impact Analysis for the Final All Appropriate Inquiries Regulation'' (Addendum to the EIA). This document is included in the docket for today's final rule. The Addendum to the EIA also summarizes EPA's responses to the comments received that addressed the estimated costs and economic impacts.

Many commenters generally agreed with EPA's conclusion that the average incremental cost increase per transaction associated with the requirements of the proposed rule would be minimal. Some commenters mentioned that the EIA conducted for the proposed rule underestimated the incremental costs associated with the proposed rule. However, only a few commenters provided an explanation as to why they thought our cost estimates were low or provided information regarding which particular activities would result in an incremental increase in the activities and costs associated with conducting an environmental site assessment, if conducted in compliance with the requirements of the proposed rule. Most commenters did not provide specific reasons for their claims of cost increases over the ASTM E1527–2000 standard. A few commenters suggested that the EIA for the proposed rule underestimated the level of effort necessary for locating and interviewing past owners or occupants, with one commenter providing an estimated level of effort of one to three hours for this task.

[3] The distribution of abandoned properties and properties with known owners, modeled as a range, is based on an estimate of vacant lands in urban areas and an estimate of abandoned Superfund sites.

4. Estimate of Costs Associated With the Final Rule

EPA made one revision to the analysis of cost impacts associated with the requirements of the proposed and final rule in response to specific issues raised by commenters. EPA agrees with the commenters who asserted that locating past owners or occupants of a property may be more time consuming than locating the current owners or occupants, as was assumed in the analysis of costs conducted for the proposed rule. Locating past owners or occupants could require as little as one 5-minute phone call (e.g., if the current owner has the contact information for the past owner) or it could require multiple phone calls that could take in excess of one hour. For the purpose of estimating the cost under the final rule, EPA estimates the incremental burden for locating past owners or occupants to be, on average, 0.5 hours per interview regardless of the property type or size. EPA did not account for this incremental burden in our analysis of the costs associated with the proposed rule. EPA also recognizes that in some cases the environmental professional will need to complete the full interview with the current owner before determining that it is necessary to interview a past owner. In other words, the environmental professional may need to complete the interview with the current owner, and then perform a more focused interview of a past owner to fill data gaps. EPA estimates that the incremental burden for interviewing past owners or occupants will be 0.5 hours for undeveloped and residential properties, one hour for commercial and industrial properties (of all sizes except large industrial), and 1.5 hours for large industrial properties. Therefore, EPA estimates that the total incremental level of effort for locating and interviewing past property owners or occupants will range from one hour to two hours depending on the property type or size.

The additional incremental hour burden, however, will not be incurred in the case of every site assessment. EPA expects that the interview with past owners or occupants will be conducted only for properties with a higher than average owner or occupant turnover rate. To derive the number of potentially affected properties, we assume that the environmental professional will interview only the current property owner if the owner was in the possession of the subject property for more than two years. We assume that after two years of owning a property, the current property owner should have a reasonably good knowledge of its condition. EPA estimates that 19 percent of Phase I ESAs conducted in a given year are conducted on properties that were sold at least once in the previous two years (for a detailed explanation on the derivation of this estimate, see the Addendum to the EIA). Using the assumption that 15 percent of all properties are abandoned properties (see Section 5.6.5.2 of EIA) which would not be affected by the requirement to interview past owners or occupants, we revised our original cost estimate to account for non-abandoned properties that were sold over the past two years. Therefore, for the purpose of our revised cost analysis, we estimate that 16 percent of properties will require an additional interview with past owners or occupants.

Except for the increase in the level of effort for the interview task for non-abandoned properties, all other parameters used in modeling our cost estimates are the same as presented in the EIA conducted for the proposed rule. To derive the incremental average cost per transaction and the total annual cost of the final rule, we employed the methodology explained in detailed in Chapters 7 and 8 of the EIA conducted for the proposed rule. Based on our analysis, the cost of a Phase I ESA under the final regulation will increase, on average, between $52 and $58. The estimated average cost for a Phase I ESA thus will range between $2,185 and $2,190.[4]

Using our revised incremental cost estimate for conducting interviews of past owners or occupants, we revised our estimated total annual cost of the final rule and our incremental total annual cost estimate. Our revised total annual cost estimate for all activities included in the all appropriate inquiries investigations conducted under the final rule is between $693.5 and $695.3 million (calculated using a discount rate of three percent). Our revised estimate of the incremental total annual cost of the final rule is between $29.7 million and $31.4 million. A more detailed explanation of our revised cost estimates, including an additional sensitivity analysis performed in response to the public comments, is included in the document titled ''Addendum to the Economic Impact Analysis for the Final All Appropriate Inquiries Regulation.'' This document is in the public docket for today's final rule.

B. Paperwork Reduction Act

The information collection requirements contained in this final rule were submitted for approval to the Office of Management and Budget under the Paperwork Reduction Act, 44 U.S.C. 3501 *et seq.* The information collection requirements are not enforceable until OMB approves them. The Information Collection Request (ICR) document prepared by EPA has been assigned EPA ICR Number 2144.02.

Under the PRA, EPA is required to estimate the notification, reporting and recordkeeping costs and burdens associated with the requirements specified in today's rule. Today's rule will require persons wanting to assert one of the liability protections under CERCLA to conduct some activities that go beyond current customary and usual business practices (i.e., beyond ASTM E1527–2000) and therefore will impose an information collection burden under the provisions of the Paperwork Reduction Act. The information collection activities are associated with the activities mandated in section 101 (35)(B) of CERCLA for those persons wanting to claim protection from CERCLA liability. None of the information collection burdens associated with the provisions of today's rule include requirements to submit the collected information to EPA or any other government agency. Information collected by persons affected by today's rule may be useful to such persons if their potential liability under CERCLA for the release or threatened release of a hazardous substance is challenged in a court.

The activities associated with today's rule that go beyond current customary and usual business practices include interviews with neighboring property owners and/or occupants in those cases where the subject property is abandoned, documentation of all environmental cleanup liens in the Phase I Environmental Site Assessment report, discussion of the relationship of purchase price to value of the property in the report, and consideration and discussion of whether additional environmental investigation is warranted. Paperwork burdens are estimated to be 546,179 hours annually, with a total cost of $29,583,206 annually. The estimated average burden hours per response is estimated to be approximately one hour (or 25 hours per response, assuming a transition from a transaction screen). The estimated average cost burden per response is estimated to be either $67 or $1,479,

[4] We assumed that the environmental professionals will need to complete the full interview with the current owner before conducting an interview with the past owners or occupants. To the extent that this may not always be the case, the average incremental cost (and by extension, the average cost for an AAI Phase I ESA) is overestimated.

depending on whether, under baseline conditions, an ASTM E1527–2000 process or a transaction screen (ASTM E1528) would have been used.

Under the Paperwork Reduction Act, ''burden'' means the total time, effort, or financial resources expended by persons to generate, maintain, retain, or disclose or provide information to or for a Federal agency. This includes the time needed to review instructions; develop, acquire, install, and utilize technology and systems for the purposes of collecting, validating, and verifying information, processing and maintaining information, and disclosing and providing information; adjust the existing ways to comply with any previously applicable instructions and requirements; train personnel to be able to respond to a collection of information; search data sources; complete and review the collection of information; and transmit or otherwise disclose the information.

An agency may not conduct or sponsor, and a person is not required to respond to a collection of information unless it displays a currently valid OMB control number. The OMB control numbers for EPA's regulations in 40 CFR are listed in 40 CFR part 9. This ICR is approved by OMB, and the Agency will publish a technical amendment to 40 CFR part 9 in the **Federal Register** to display the OMB control number for the approved information collection requirements contained in this final rule.

C. Regulatory Flexibility Act

The Regulatory Flexibility Act (RFA), as amended by the Small Business Regulatory Enforcement Fairness Act of 1996 (SBREFA), 5 U.S.C. 601 *et. seq.,* generally requires an agency to prepare a regulatory flexibility analysis of any rule subject to notice and comment rulemaking requirements under the Administrative Procedure Act or any other statute, unless the agency certifies that the rule will not have a significant economic impact on a substantial number of small entities. Small entities include small businesses, small organizations, and small governmental jurisdictions.

For the purposes of assessing the impacts of today's rule on small entities, small entity is defined as: (1) A small business that is defined by the Small Business Administration by category of business using the North American Industrial Classification System (NAICS) and codified at 13 CFR 121.201; (2) a small governmental jurisdiction that is a government of a city, county, town, school district or special district with a population of less than 50,000; and (3) a small organization that is any not-for-profit enterprise which is independently owned and operated and is not dominant in its field.

Since all non-residential property transactions could be affected by today's rule, if it is promulgated, large numbers of small entities could be affected to some degree. However, we estimate that the effects, on the whole, will not be significant for small entities. We estimate that, for the majority of small entities, the average incremental cost of today's rule relative to conducting an ASTM E1527–2000 Phase I Environmental Site Assessment will be between $52 and $58. When we annualize the incremental cost of $58 per property transaction over ten years at a seven percent discount rate, we estimate that the average annual cost increase per establishment per property transaction will be $8. Thus, the cost impact to small entities is estimated to not be significant. A more detailed summary of our analysis of the potential impacts of today's rule to small entities is included in ''Economic Impacts Analysis of the Final All Appropriate Inquiries Regulation.'' This document is included in the docket for today's rule.

After considering the economic impacts of today's final rule on small entities, I certify that this action will not have a significant economic impact on a substantial number of small entities. We estimate that, on average, 266,000 small entities may purchase commercial real estate in any given year and therefore could potentially be impacted by today's final rule. Though large numbers of small entities could be affected to some degree, we estimated that the effects, on the whole, would not be significant for small entities. We estimate that, for the majority of small entities, the average incremental cost of today's rule relative to conducting an ASTM E1527–2000 will be between $52 and $58. For the small percentage of cases for which a transaction screen would have been preferred to the ASTM E1527–2000 in the baseline, but which now will require an assessment in compliance with the rule, the average incremental cost of conducting an environmental site assessment will be between $1,459 and $1,465. When we annualize the incremental cost per property transaction over ten years at a seven percent discount rate, we estimate that for the majority of small entities the average annual cost increase per establishment per property transaction will be approximately $8. For the small percentage of entities transitioning from transaction screens to the all appropriate inquiries requirements of the final rule, the average annual cost increase per establishment per property transaction will be $209.[5]

D. Unfunded Mandates Reform Act

Title II of the Unfunded Mandates Reform Act of 1995 (UMRA), Public Law 104–4, establishes requirements for federal agencies to assess the effects of their regulatory actions on State, local, and tribal governments and the private sector. Under section 202 of the UMRA, EPA must prepare a written statement, including a cost-benefit analysis, for proposed and final rules with ''Federal mandates'' that may result in expenditures to State, local, and tribal governments, in the aggregate, or to the private sector, of $100 million or more in any one year. Before promulgating an EPA rule for which a written statement is needed, section 205 of the UMRA generally requires EPA to identify and consider a reasonable number of regulatory alternatives and adopt the least costly, most cost-effective, or least burdensome alternative that achieves the objectives of the rule. The provisions of section 205 do not apply when they are inconsistent with applicable law. Moreover, section 205 allows EPA to adopt an alternative other than the least costly, most cost-effective or least burdensome alternative if the Administrator publishes with the final rule an explanation of why that alternative was not adopted.

Before EPA establishes any regulatory requirements that may significantly or uniquely affect small governments, including tribal governments, it must have developed under section 203 of the UMRA, a small government agency plan. The plan must provide for notifying potentially affected small governments, enabling officials to have meaningful and timely input in the development of regulatory proposals with significant federal intergovernmental mandates, and informing, educating, and advising small governments on compliance with the regulatory requirements.

Today's rule contains no federal mandates (under the regulatory provisions of Title II of the UMRA) for

[5] For a very small percentage of entities transitioning from transaction screens to the all appropriate inquiries requirements, the maximum increase per establishment per property transaction is estimated to be approximately $2,845. When we annualize this incremental cost per property transaction over ten years at a seven percent discount rate, we estimate that the maximum annual cost increase per establishment per property transaction will be $405. We estimate that approximately one fifth of one percent of the properties transitioning from a transaction screen to a Phase I ESA will have an impact of this magnitude each year.

state, local, or tribal governments or the private sector. The rule imposes no enforceable duty on any state, local, or tribal governments. EPA also determined that today's rule contains no regulatory requirements that might significantly or uniquely affect small governments. In addition, as discussed above, the private sector is not expected to incur costs of $100 million or more as a result of today's rule. Therefore, today's rule is not subject to the requirements of Sections 202 and 205 of UMRA.

E. Executive Order 13132: Federalism

Executive Order 13132, entitled ''Federalism'' (64 FR 43255, August 10, 1999), requires EPA to develop an accountable process to ensure ''meaningful and timely input by State and local officials in the development of regulatory policies that have federalism implications.'' ''Policies that have federalism implications'' is defined in the Executive Order to include regulations that have ''substantial direct effects on the states, on the relationship between the national government and the states, or on the distribution of power and responsibilities among the various levels of government.''

Today's rule does not have federalism implications. It will not have substantial direct effects on the states, on the relationship between the national government and the states, or on the distribution of power and responsibilities among the various levels of government, as specified in Executive Order 13132. No state and local government bodies will incur compliance costs as a result of today's rulemaking. Therefore, Executive Order 13132 does not apply to this rule.

F. Executive Order 13175: Consultation and Coordination With Indian Tribal Governments

Executive Order 13175, entitled ''Consultation and Coordination with Indian Tribal Governments'' (65 FR 67249, November 9, 2000), requires EPA to develop an accountable process to ensure ''meaningful and timely input by tribal officials in the development of regulatory policies that have tribal implications.'' Today's rule does not have tribal implications, as specified in Executive Order 13175. Today's rule does not significantly or uniquely affect the communities of Indian tribal governments, nor would it impose direct compliance costs on them. Thus, Executive Order 13175 does not apply to this rule.

G. Executive Order 13045: Protection of Children From Environmental Risks and Safety Risks

Executive Order 13045, entitled ''Protection of Children from Environmental Health Risks and Safety Risks (62 FR 19885, April 23, 1997) applies to any rule that: (1) Is determined to be ''economically significant'' as defined under Executive Order 12866, and (2) concerns an environmental health or safety risk that EPA has reason to believe may have a disproportionate effect on children. If the regulatory action meets both criteria, the Agency must evaluate the environmental health or safety effects of the planned rule on children; and explain why the planned regulation is preferable to other potentially effective and reasonably feasible alternatives considered by the Agency.

Today's rule is not subject to the Executive Order because it is not economically significant as defined in Executive Order 12866.

H. Executive Order 13211: Actions That Significantly Affect Energy Supply, Distribution or Use

Today's final rule is not a ''significant energy action'' as defined in Executive Order 13211, ''Actions Concerning Regulations That Significantly Affect Energy Supply, Distribution, or Use'' (66 FR 28355, May 22, 2001) because it is not likely to have a significantly adverse effect on the supply, distribution, or use of energy. Further, we have concluded that this rule is not likely to have any adverse energy effects.

I. National Technology Transfer and Advancement Act

Section 12(d) of the National Technology Transfer and Advancement Act of 1995 (''NTTAA''), Public Law 104–113, section 12(d) (15 U.S.C. 272 note), directs EPA to use voluntary consensus standards in its regulatory activities, unless to do so would be inconsistent with applicable law or otherwise impractical. Voluntary consensus standards are technical standards (e.g., materials specifications, test methods, sampling procedures, and business practices) that are developed or adopted by voluntary consensus standards bodies. The NTTAA directs EPA to provide Congress, through OMB, explanations when the Agency decides not to use available and applicable voluntary consensus standards. Today's rule involves technical standards. Therefore, the requirements of section 12(d) of the National Technology Transfer and Advancement Act of 1995 (15 U.S.C. 272) apply.

Today's final rule is based upon a proposed rule that was developed with the assistance of a regulatory negotiation committee comprised of various affected stakeholder groups and modified slightly, based upon public comments received in response to the proposed rule. When developing the proposed rule, EPA considered using the existing standard developed by ASTM International as the federal standard for all appropriate inquiries. This standard is known as the ASTM E1527–2000 standard (''Standard Practice for Environmental Site Assessment: Phase I Environmental Site Assessment Process''). However, when we proposed the federal standards for all appropriate inquiries, EPA determined that the ASTM E1527–2000 standard is inconsistent with applicable law.

In CERCLA section 101(35)(B), Congress included ten specific criteria to be used in promulgating the all appropriate inquiries rule. The 2000 version of the ASTM Phase I Environmental Site Assessment Process does not address all of the required criteria. For example, the ASTM International standard does not provide for interviews of past owners, operators, and occupants of a facility. The statute, however, states that the federally promulgated standard ''shall include * * * interviews with past and present owners, operators, and occupants of the facility for the purpose of gathering information regarding the potential for contamination at the facility.'' CERCLA section 101(35)(B)(iii)(II). In addition, as outlined in the preamble to the proposed rule (69 FR 52541) the ASTM E1527–2000 standard also does not meet other statutory requirements. As a result, use of the ASTM E1527–2000 standard would be inconsistent with applicable law.

In today's final rule, EPA is referencing the updated standards and practices developed by ASTM International and known as Standard E1527–05 (entitled ''Standard Practice for Environmental Site Assessments: Phase I Environmental Site Assessment Process''). The Agency has determined that this voluntary consensus standard is consistent with today's final rule and is compliant with the statutory criteria for all appropriate inquiries. Persons conducting all appropriate inquiries may use the procedures included in the ASTM E1527–05 standard to comply with today's final rule.

J. Executive Order 12898: Federal Actions To Address Environmental Justice in Minority Populations and Low-Income Populations

Executive Order 12898, ''Federal Actions to Address Environmental Justice in Minority Populations and Low-Income Populations'' (February 11, 1994), is designed to address the environmental and human health conditions of minority and low-income populations. EPA is committed to addressing environmental justice concerns and has assumed a leadership role in environmental justice initiatives to enhance environmental quality for all citizens of the United States. The Agency's goals are to ensure that no segment of the population, regardless of race, color, national origin, income, or net worth bears disproportionately high and adverse human health and environmental impacts as a result of EPA's policies, programs, and activities. Our goal is to ensure that all citizens live in clean and sustainable communities. In response to Executive Order 12898, and to concerns voiced by many groups outside the Agency, EPA's Office of Solid Waste and Emergency Response (OSWER) formed an Environmental Justice Task Force to analyze the array of environmental justice issues specific to waste programs and to develop an overall strategy to identify and address these issues (OSWER Directive No. 9200.3–17). EPA's brownfields program has a particular emphasis on addressing concerns specific to environmental justices communities. Many of the communities and neighborhoods that are most significantly impacted by brownfields are environmental justice communities. EPA's brownfields program targets such communities for assessment, cleanup, and revitalization. The brownfields program has a long history of working with environmental justice communities and advocates through our technical assistance and grant programs. In addition to the monies awarded to such communities in the form of assessment and cleanup grants, the brownfields program also works with environmental justice communities through our job training grants program. The job training grants provide money to government entities to facilitate the training of persons living in or near brownfields communities to attain skills for conducting site assessments and cleanups.

Given that environmental justice communities are significantly impacted by brownfields, and the federal standards for all appropriate inquiries may play a primary role in encouraging the assessment and cleanup of brownfields sites, EPA made it a priority to obtain input from representatives of environmental justice interest groups during the development of today's rulemaking. The Negotiated Rulemaking Committee tasked with developing the all appropriate inquiries proposed rule included three representatives from environmental justice advocacy groups. Each representative played a significant role in the negotiations and in the development of the proposed rule. Today's final rule includes no significant changes to the proposed rule and in particular, includes no changes that will significantly or disproportionately impact environmental justice communities.

K. Congressional Review Act

The Congressional Review Act, 5 U.S.C. 801 *et seq.*, as added by the Small Business Regulatory Enforcement Fairness Act of 1996, generally provides that before a rule may take effect, the agency promulgating the rule must submit a rule report, which includes a copy of the rule, to each House of the Congress and to the Comptroller General of the United States. EPA will submit a report containing this rule and other required information to the U.S. Senate, the U.S. House of Representatives, and the Comptroller General of the United States prior to publication of the rule in the **Federal Register**. A major rule cannot take effect until 60 days after it is published in the **Federal Register**. This action is not a ''major rule'' as defined by 5 U.S.C. 804(2). This rule will be effective November 1, 2006.

List of Subjects in 40 CFR Part 312

Environmental protection, Administrative practice and procedure, Hazardous substances, Intergovernmental relations, Reporting and recordkeeping requirements.

Dated: October 21, 2005.

Stephen L. Johnson,

Administrator.

■ For reasons set out in the preamble, title 40, chapter I of the Code of Federal Regulations is amended by revising part 312 as follows:

PART 312—INNOCENT LANDOWNERS, STANDARDS FOR CONDUCTING ALL APPROPRIATE INQUIRIES

Subpart A—Introduction

Sec.
312.1 Purpose, applicability, scope, and disclosure obligations.

Subpart B—Definitions and References

312.10 Definitions.
312.11 References.

Subpart C—Standards and Practices

312.20 All appropriate inquiries.
312.21 Results of inquiry by an environmental professional.
312.22 Additional inquiries.
312.23 Interviews with past and present owners, operators, and occupants.
312.24 Reviews of historical sources of information.
312.25 Searches for recorded environmental cleanup liens.
312.26 Reviews of federal, state, tribal and local government records.
312.27 Visual inspections of the facility and of adjoining properties.
312.28 Specialized knowledge or experience on the part of the defendant.
312.29 The relationship of the purchase price to the value of the property, if the property was not contaminated.
312.30 Commonly known or reasonably ascertainable information about the property.
312.31 The degree of obviousness of the presence or likely presence of contamination at the property, and the ability to detect the contamination by appropriate investigation.

Authority: Section 101(35)(B) of CERCLA, as amended, 42 U.S.C. 9601(35)(B).

PART 312—INNOCENT LANDOWNERS, STANDARDS FOR CONDUCTING ALL APPROPRIATE INQUIRIES

Subpart A—Introduction

§ 312.1 Purpose, applicability, scope and disclosure obligations.

(a) *Purpose.* The purpose of this section is to provide standards and practices for ''all appropriate inquiries'' for the purposes of CERCLA sections 101(35)(B)(i)(I) and 101(35)(B)(ii) and (iii).

(b) *Applicability.* The requirements of this part are applicable to:

(1) Persons seeking to establish:

(i) The innocent landowner defense pursuant to CERCLA sections 101(35) and 107(b)(3);

(ii) The bona fide prospective purchaser liability protection pursuant to CERCLA sections 101(40) and 107(r);

(iii) The contiguous property owner liability protection pursuant to CERCLA section 107(q); and

(2) persons conducting site characterization and assessments with the use of a grant awarded under CERCLA section 104(k)(2)(B).

(c) *Scope.* (1) Persons seeking to establish one of the liability protections under paragraph (b)(1) of this section must conduct investigations as required in this part, including an inquiry by an environmental professional, as required under § 312.21, and the additional inquiries defined in § 312.22, to identify

conditions indicative of releases or threatened releases, as defined in CERCLA section 101(22), of hazardous substances, as defined in CERCLA section 101(14).

(2) Persons identified in paragraph (b)(2) of this section must conduct investigations required in this part, including an inquiry by an environmental professional, as required under § 312.21, and the additional inquiries defined in § 312.22, to identify conditions indicative of releases and threatened releases of hazardous substances, as defined in CERCLA section 101(22), and as applicable per the terms and conditions of the grant or cooperative agreement, releases and threatened releases of:

(i) Pollutants and contaminants, as defined in CERCLA section 101(33);

(ii) Petroleum or petroleum products excluded from the definition of ''hazardous substance'' as defined in CERCLA section 101(14); and

(iii) Controlled substances, as defined in 21 U.S.C. 802.

(d) *Disclosure obligations.* None of the requirements of this part limits or expands disclosure obligations under any federal, state, tribal, or local law, including the requirements under CERCLA sections 101(40)(c) and 107(q)(1)(A)(vii) requiring persons, including environmental professionals, to provide all legally required notices with respect to the discovery of releases of hazardous substances. It is the obligation of each person, including environmental professionals, conducting the inquiry to determine his or her respective disclosure obligations under federal, state, tribal, and local law and to comply with such disclosure requirements.

Subpart B—Definitions and References

§ 312.10 Definitions.

(a) Terms used in this part and not defined below, but defined in either CERCLA or 40 CFR part 300 (the National Oil and Hazardous Substances Pollution Contingency Plan) shall have the definitions provided in CERCLA or 40 CFR part 300.

(b) When used in this part, the following terms have the meanings provided as follows:

Abandoned property means: property that can be presumed to be deserted, or an intent to relinquish possession or control can be inferred from the general disrepair or lack of activity thereon such that a reasonable person could believe that there was an intent on the part of the current owner to surrender rights to the property.

Adjoining properties means: any real property or properties the border of which is (are) shared in part or in whole with that of the subject property, or that would be shared in part or in whole with that of the subject property but for a street, road, or other public thoroughfare separating the properties.

Data gap means: a lack of or inability to obtain information required by the standards and practices listed in subpart C of this part despite good faith efforts by the environmental professional or persons identified under § 312.1(b), as appropriate, to gather such information pursuant to §§ 312.20(e)(1) and 312.20(e)(2).

Date of acquisition or purchase date means: the date on which a person acquires title to the property.

Environmental Professional means:

(1) a person who possesses sufficient specific education, training, and experience necessary to exercise professional judgment to develop opinions and conclusions regarding conditions indicative of releases or threatened releases (see § 312.1(c)) on, at, in, or to a property, sufficient to meet the objectives and performance factors in § 312.20(e) and (f).

(2) Such a person must:

(i) Hold a current Professional Engineer's or Professional Geologist's license or registration from a state, tribe, or U.S. territory (or the Commonwealth of Puerto Rico) and have the equivalent of three (3) years of full-time relevant experience; or

(ii) Be licensed or certified by the federal government, a state, tribe, or U.S. territory (or the Commonwealth of Puerto Rico) to perform environmental inquiries as defined in § 312.21 and have the equivalent of three (3) years of full-time relevant experience; or

(iii) Have a Baccalaureate or higher degree from an accredited institution of higher education in a discipline of engineering or science and the equivalent of five (5) years of full-time relevant experience; or

(iv) Have the equivalent of ten (10) years of full-time relevant experience.

(3) An environmental professional should remain current in his or her field through participation in continuing education or other activities.

(4) The definition of environmental professional provided above does not preempt state professional licensing or registration requirements such as those for a professional geologist, engineer, or site remediation professional. Before commencing work, a person should determine the applicability of state professional licensing or registration laws to the activities to be undertaken as part of the inquiry identified in § 312.21(b).

(5) A person who does not qualify as an environmental professional under the foregoing definition may assist in the conduct of all appropriate inquiries in accordance with this part if such person is under the supervision or responsible charge of a person meeting the definition of an environmental professional provided above when conducting such activities.

Relevant experience, as used in the definition of environmental professional in this section, means: participation in the performance of all appropriate inquiries investigations, environmental site assessments, or other site investigations that may include environmental analyses, investigations, and remediation which involve the understanding of surface and subsurface environmental conditions and the processes used to evaluate these conditions and for which professional judgment was used to develop opinions regarding conditions indicative of releases or threatened releases (see § 312.1(c)) to the subject property.

Good faith means: the absence of any intention to seek an unfair advantage or to defraud another party; an honest and sincere intention to fulfill one's obligations in the conduct or transaction concerned.

Institutional controls means: non-engineered instruments, such as administrative and/or legal controls, that help to minimize the potential for human exposure to contamination and/or protect the integrity of a remedy.

§ 312.11 References.

The following industry standards may be used to comply with the requirements set forth in §§ 312.23 through 312.31:

(a) The procedures of ASTM International Standard E1527–05 entitled ''Standard Practice for Environmental Site Assessments: Phase I Environmental Site Assessment Process.''

(b) [Reserved]

Subpart C—Standards and Practices

§ 312.20 All appropriate inquiries.

(a) ''All appropriate inquiries'' pursuant to CERCLA section 101(35)(B) must be conducted within one year prior to the date of acquisition of the subject property and must include:

(1) An inquiry by an environmental professional (as defined in § 312.10), as provided in § 312.21;

(2) The collection of information pursuant to § 312.22 by persons identified under § 312.1(b); and

(3) Searches for recorded environmental cleanup liens, as required in § 312.25.

(b) Notwithstanding paragraph (a) of this section, the following components of the all appropriate inquiries must be conducted or updated within 180 days of and prior to the date of acquisition of the subject property:

(1) Interviews with past and present owners, operators, and occupants (see § 312.23);

(2) Searches for recorded environmental cleanup liens (see § 312.25);

(3) Reviews of federal, tribal, state, and local government records (see § 312.26);

(4) Visual inspections of the facility and of adjoining properties (see § 312.27); and

(5) The declaration by the environmental professional (see § 312.21(d)).

(c) All appropriate inquiries may include the results of and information contained in an inquiry previously conducted by, or on the behalf of, persons identified under § 312.1(b) and who are responsible for the inquiries for the subject property, provided:

(1) Such information was collected during the conduct of all appropriate inquiries in compliance with the requirements of CERCLA sections 101(35)(B), 101(40)(B) and 107(q)(A)(viii);

(2) Such information was collected or updated within one year prior to the date of acquisition of the subject property;

(3) Notwithstanding paragraph (b)(2) of this section, the following components of the inquiries were conducted or updated within 180 days of and prior to the date of acquisition of the subject property:

(i) Interviews with past and present owners, operators, and occupants (see § 312.23);

(ii) Searches for recorded environmental cleanup liens (see § 312.25);

(iii) Reviews of federal, tribal, state, and local government records (see § 312.26);

(iv) Visual inspections of the facility and of adjoining properties (see § 312.27); and

(v) The declaration by the environmental professional (see § 312.21(d)).

(4) Previously collected information is updated to include relevant changes in the conditions of the property and specialized knowledge, as outlined in § 312.28, of the persons conducting the all appropriate inquiries for the subject property, including persons identified in § 312.1(b) and the environmental professional, defined in § 312.10.

(d) All appropriate inquiries can include the results of report(s) specified in § 312.21(c), that have been prepared by or for other persons, provided that:

(1) The report(s) meets the objectives and performance factors of this regulation, as specified in paragraphs (e) and (f) of this section; and

(2) The person specified in § 312.1(b) and seeking to use the previously collected information reviews the information and conducts the additional inquiries pursuant to §§ 312.28, 312.29 and 312.30 and the all appropriate inquiries are updated in paragraph (b)(3) of this section, as necessary.

(e) *Objectives.* The standards and practices set forth in this part for All Appropriate Inquiries are intended to result in the identification of conditions indicative of releases and threatened releases of hazardous substances on, at, in, or to the subject property.

(1) In performing the all appropriate inquiries, as defined in this section and provided in the standards and practices set forth this subpart, the persons identified under § 312.1(b)(1) and the environmental professional, as defined in § 312.10, must seek to identify through the conduct of the standards and practices set forth in this subpart, the following types of information about the subject property:

(i) Current and past property uses and occupancies;

(ii) Current and past uses of hazardous substances;

(iii) Waste management and disposal activities that could have caused releases or threatened releases of hazardous substances;

(iv) Current and past corrective actions and response activities undertaken to address past and on-going releases of hazardous substances;

(v) Engineering controls;

(vi) Institutional controls; and

(vii) Properties adjoining or located nearby the subject property that have environmental conditions that could have resulted in conditions indicative of releases or threatened releases of hazardous substances to the subject property.

(2) In the case of persons identified in § 312.1(b)(2), the standards and practices for All Appropriate Inquiries set forth in this part are intended to result in the identification of conditions indicative of releases and threatened releases of hazardous substances, pollutants, contaminants, petroleum and petroleum products, and controlled substances (as defined in 21 U.S.C. 802) on, at, in, or to the subject property. In performing the all appropriate inquiries, as defined in this section and provided in the standards and practices set forth in this subpart, the persons identified under § 312.1(b) and the environmental professional, as defined in § 312.10, must seek to identify through the conduct of the standards and practices set forth in this subpart, the following types of information about the subject property:

(i) Current and past property uses and occupancies;

(ii) Current and past uses of hazardous substances, pollutants, contaminants, petroleum and petroleum products, and controlled substances (as defined in 21 U.S.C. 802);

(iii) Waste management and disposal activities;

(iv) Current and past corrective actions and response activities undertaken to address past and on-going releases of hazardous substances pollutants, contaminants, petroleum and petroleum products, and controlled substances (as defined in 21 U.S.C. 802);

(v) Engineering controls;

(vi) Institutional controls; and

(vii) Properties adjoining or located nearby the subject property that have environmental conditions that could have resulted in conditions indicative of releases or threatened releases of hazardous substances, pollutants, contaminants, petroleum and petroleum products, and controlled substances (as defined in 21 U.S.C. 802) to the subject property.

(f) *Performance factors.* In performing each of the standards and practices set forth in this subpart and to meet the objectives stated in paragraph (e) of this section, the persons identified under § 312.1(b) or the environmental professional as defined in § 312.10 (as appropriate to the particular standard and practice) must seek to:

(1) Gather the information that is required for each standard and practice listed in this subpart that is publicly available, obtainable from its source within reasonable time and cost constraints, and which can practicably be reviewed; and

(2) Review and evaluate the thoroughness and reliability of the information gathered in complying with each standard and practice listed in this subpart taking into account information gathered in the course of complying with the other standards and practices of this subpart.

(g) To the extent there are data gaps (as defined in § 312.10) in the information developed as part of the inquiries in paragraph (e) of this section that affect the ability of persons (including the environmental professional) conducting the all

appropriate inquiries to identify conditions indicative of releases or threatened releases in each area of inquiry under each standard and practice such persons should identify such data gaps, identify the sources of information consulted to address such data gaps, and comment upon the significance of such data gaps with regard to the ability to identify conditions indicative of releases or threatened releases of hazardous substances [and in the case of persons identified in § 312.1(b)(2), hazardous substances, pollutants, contaminants, petroleum and petroleum products, and controlled substances (as defined in 21 U.S.C. 802)] on, at, in, or to the subject property. Sampling and analysis may be conducted to develop information to address data gaps.

(h) Releases and threatened releases identified as part of the all appropriate inquiries should be noted in the report of the inquiries. These standards and practices however are not intended to require the identification in the written report prepared pursuant to § 312.21(c) of quantities or amounts, either individually or in the aggregate, of hazardous substances pollutants, contaminants, petroleum and petroleum products, and controlled substances (as defined in 21 U.S.C. 802) that because of said quantities and amounts, generally would not pose a threat to human health or the environment.

§ 312.21 Results of inquiry by an environmental professional.

(a) Persons identified under § 312.1(b) must undertake an inquiry, as defined in paragraph (b) of this section, by an environmental professional, or conducted under the supervision or responsible charge of, an environmental professional, as defined in § 312.10. Such inquiry is hereafter referred to as ''the inquiry of the environmental professional.''

(b) The inquiry of the environmental professional must include the requirements set forth in §§ 312.23 (interviews with past and present owners * * *), 312.24 (reviews of historical sources * * *), 312.26 (reviews of government records), 312.27 (visual inspections), 312.30 (commonly known or reasonably ascertainable information), and 312.31 (degree of obviousness of the presence * * * and the ability to detect the contamination * * *). In addition, the inquiry should take into account information provided to the environmental professional as a result of the additional inquiries conducted by persons identified in § 312.1(b) and in accordance with the requirements of § 312.22.

(c) The results of the inquiry by an environmental professional must be documented in a written report that, at a minimum, includes the following:

(1) An opinion as to whether the inquiry has identified conditions indicative of releases or threatened releases of hazardous substances [and in the case of inquiries conducted for persons identified in § 312.1(b)(2) conditions indicative of releases and threatened releases of pollutants, contaminants, petroleum and petroleum products, and controlled substances (as defined in 21 U.S.C. 802)] on, at, in, or to the subject property;

(2) An identification of data gaps (as defined in § 312.10) in the information developed as part of the inquiry that affect the ability of the environmental professional to identify conditions indicative of releases or threatened releases of hazardous substances [and in the case of inquiries conducted for persons identified in § 312.1(b)(2) conditions indicative of releases and threatened releases of pollutants, contaminants, petroleum and petroleum products, and controlled substances (as defined in 21 U.S.C. 802)] on, at, in, or to the subject property and comments regarding the significance of such data gaps on the environmental professional's ability to provide an opinion as to whether the inquiry has identified conditions indicative of releases or threatened releases on, at, in, or to the subject property. If there are data gaps such that the environmental professional cannot reach an opinion regarding the identification of conditions indicative of releases and threatened releases, such data gaps must be noted in the environmental professional's opinion in paragraph (c)(1) of this section; and

(3) The qualifications of the environmental professional(s).

(d) The environmental professional must place the following statements in the written document identified in paragraph (c) of this section and sign the document:

> ''[I, We] declare that, to the best of [my, our] professional knowledge and belief, [I, we] meet the definition of Environmental Professional as defined in § 312.10 of this part.''
>
> ''[I, We] have the specific qualifications based on education, training, and experience to assess a property of the nature, history, and setting of the subject property. [I, We] have developed and performed the all appropriate inquiries in conformance with the standards and practices set forth in 40 CFR Part 312.''

§ 312.22 Additional inquiries.

(a) Persons identified under § 312.1(b) must conduct the inquiries listed in paragraphs (a)(1) through (a)(4) below and may provide the information associated with such inquiries to the environmental professional responsible for conducting the activities listed in § 312.21:

(1) As required by § 312.25 and if not otherwise obtained by the environmental professional, environmental cleanup liens against the subject property that are filed or recorded under federal, tribal, state, or local law;

(2) As required by § 312.28, specialized knowledge or experience of the person identified in § 312.1(b);

(3) As required by § 312.29, the relationship of the purchase price to the fair market value of the subject property, if the property was not contaminated; and

(4) As required by § 312.30, and if not otherwise obtained by the environmental professional, commonly known or reasonably ascertainable information about the subject property.

§ 312.23 Interviews with past and present owners, operators, and occupants.

(a) Interviews with owners, operators, and occupants of the subject property must be conducted for the purposes of achieving the objectives and performance factors of § 312.20(e) and (f).

(b) The inquiry of the environmental professional must include interviewing the current owner and occupant of the subject property. If the property has multiple occupants, the inquiry of the environmental professional shall include interviewing major occupants, as well as those occupants likely to use, store, treat, handle or dispose of hazardous substances [and in the case of inquiries conducted for persons identified in § 312.1(b)(2) pollutants, contaminants, petroleum and petroleum products, and controlled substances (as defined in 21 U.S.C. 802)], or those who have likely done so in the past.

(c) The inquiry of the environmental professional also must include, to the extent necessary to achieve the objectives and performance factors of § 312.20(e) and (f), interviewing one or more of the following persons:

(1) Current and past facility managers with relevant knowledge of uses and physical characteristics of the property;

(2) Past owners, occupants, or operators of the subject property; or

(3) Employees of current and past occupants of the subject property.

(d) In the case of inquiries conducted at ''abandoned properties,'' as defined in § 312.10, where there is evidence of potential unauthorized uses of the subject property or evidence of

uncontrolled access to the subject property, the environmental professional's inquiry must include interviewing one or more (as necessary) owners or occupants of neighboring or nearby properties from which it appears possible to have observed uses of, or releases at, such abandoned properties for the purpose of gathering information necessary to achieve the objectives and performance factors of § 312.20(e) and (f).

§ 312.24 Reviews of historical sources of information.

(a) Historical documents and records must be reviewed for the purposes of achieving the objectives and performance factors of § 312.20(e) and (f). Historical documents and records may include, but are not limited to, aerial photographs, fire insurance maps, building department records, chain of title documents, and land use records.

(b) Historical documents and records reviewed must cover a period of time as far back in the history of the subject property as it can be shown that the property contained structures or from the time the property was first used for residential, agricultural, commercial, industrial, or governmental purposes. For the purpose of achieving the objectives and performance factors of § 312.20(e) and (f), the environmental professional may exercise professional judgment in context of the facts available at the time of the inquiry as to how far back in time it is necessary to search historical records.

§ 312.25 Searches for recorded environmental cleanup liens.

(a) All appropriate inquiries must include a search for the existence of environmental cleanup liens against the subject property that are filed or recorded under federal, tribal, state, or local law.

(b) All information collected regarding the existence of such environmental cleanup liens associated with the subject property by persons to whom this part is applicable per § 312.1(b) and not by an environmental professional, may be provided to the environmental professional or retained by the applicable party.

§ 312.26 Reviews of Federal, State, Tribal, and local government records.

(a) Federal, tribal, state, and local government records or data bases of government records of the subject property and adjoining properties must be reviewed for the purposes of achieving the objectives and performance factors of § 312.20(e) and (f).

(b) With regard to the subject property, the review of federal, tribal, and state government records or data bases of such government records and local government records and data bases of such records should include:

(1) Records of reported releases or threatened releases, including site investigation reports for the subject property;

(2) Records of activities, conditions, or incidents likely to cause or contribute to releases or threatened releases as defined in § 312.1(c), including landfill and other disposal unit location records and permits, storage tank records and permits, hazardous waste handler and generator records and permits, federal, tribal and state government listings of sites identified as priority cleanup sites, and spill reporting records;

(3) CERCLIS records;

(4) Public health records;

(5) Emergency Response Notification System records;

(6) Registries or publicly available lists of engineering controls; and

(7) Registries or publicly available lists of institutional controls, including environmental land use restrictions, applicable to the subject property.

(c) With regard to nearby or adjoining properties, the review of federal, tribal, state, and local government records or databases of government records should include the identification of the following:

(1) Properties for which there are government records of reported releases or threatened releases. Such records or databases containing such records and the associated distances from the subject property for which such information should be searched include the following:

(i) Records of NPL sites or tribal- and state-equivalent sites (one mile);

(ii) RCRA facilities subject to corrective action (one mile);

(iii) Records of federally-registered, or state-permitted or registered, hazardous waste sites identified for investigation or remediation, such as sites enrolled in state and tribal voluntary cleanup programs and tribal- and state-listed brownfields sites (one-half mile);

(iv) Records of leaking underground storage tanks (one-half mile); and

(2) Properties that previously were identified or regulated by a government entity due to environmental concerns at the property. Such records or databases containing such records and the associated distances from the subject property for which such information should be searched include the following:

(i) Records of delisted NPL sites (one-half mile);

(ii) Registries or publicly available lists of engineering controls (one-half mile); and

(iii) Records of former CERCLIS sites with no further remedial action notices (one-half mile).

(3) Properties for which there are records of federally-permitted, tribal-permitted or registered, or state-permitted or registered waste management activities. Such records or data bases that may contain such records include the following:

(i) Records of RCRA small quantity and large quantity generators (adjoining properties);

(ii) Records of federally-permitted, tribal-permitted, or state-permitted (or registered) landfills and solid waste management facilities (one-half mile); and

(iii) Records of registered storage tanks (adjoining property).

(4) A review of additional government records with regard to sites identified under paragraphs (c)(1) through (c)(3) of this section may be necessary in the judgment of the environmental professional for the purpose of achieving the objectives and performance factors of § 312.20(e) and (f).

(d) The search distance from the subject property boundary for reviewing government records or databases of government records listed in paragraph (c) of this section may be modified based upon the professional judgment of the environmental professional. The rationale for such modifications must be documented by the environmental professional. The environmental professional may consider one or more of the following factors in determining an alternate appropriate search distance:

(1) The nature and extent of a release;

(2) Geologic, hydrogeologic, or topographic conditions of the subject property and surrounding environment;

(3) Land use or development densities;

(4) The property type;

(5) Existing or past uses of surrounding properties;

(6) Potential migration pathways (e.g., groundwater flow direction, prevalent wind direction); or

(7) Other relevant factors.

§ 312.27 Visual inspections of the facility and of adjoining properties.

(a) For the purpose of achieving the objectives and performance factors of § 312.20(e) and (f), the inquiry of the environmental professional must include:

(1) A visual on-site inspection of the subject property and facilities and improvements on the subject property,

including a visual inspection of the areas where hazardous substances may be or may have been used, stored, treated, handled, or disposed. Physical limitations to the visual inspection must be noted.

(2) A visual inspection of adjoining properties, from the subject property line, public rights-of-way, or other vantage point (e.g., aerial photography), including a visual inspection of areas where hazardous substances may be or may have been stored, treated, handled or disposed. Physical limitations to the inspection of adjacent properties must be noted.

(b) Persons conducting site characterization and assessments using a grant awarded under CERCLA section 104(k)(2)(B) must include in the inquiries referenced in § 312.27(a) visual inspections of areas where hazardous substances, and may include, as applicable per the terms and conditions of the grant or cooperative agreement, pollutants and contaminants, petroleum and petroleum products, and controlled substances as defined in 21 U.S.C. 802 may be or may have been used, stored, treated, handled or disposed at the subject property and adjoining properties.

(c) Except as noted in this subsection, a visual on-site inspection of the subject property must be conducted. In the unusual circumstance where an on-site visual inspection of the subject property cannot be performed because of physical limitations, remote and inaccessible location, or other inability to obtain access to the property, provided good faith (as defined in § 312.10) efforts have been taken to obtain such access, an on-site inspection will not be required. The mere refusal of a voluntary seller to provide access to the subject property does not constitute an unusual circumstance. In such unusual circumstances, the inquiry of the environmental professional must include:

(1) Visually inspecting the subject property via another method (such as aerial imagery for large properties), or visually inspecting the subject property from the nearest accessible vantage point (such as the property line or public road for small properties);

(2) Documentation of efforts undertaken to obtain access and an explanation of why such efforts were unsuccessful; and

(3) Documentation of other sources of information regarding releases or threatened releases at the subject property that were consulted in accordance with § 312.20(e). Such documentation should include comments by the environmental professional on the significance of the failure to conduct a visual on-site inspection of the subject property with regard to the ability to identify conditions indicative of releases or threatened releases on, at, in, or to the subject property, if any.

§ 312.28 Specialized knowledge or experience on the part of the defendant.

(a) Persons to whom this part is applicable per § 312.1(b) must take into account, their specialized knowledge of the subject property, the area surrounding the subject property, the conditions of adjoining properties, and any other experience relevant to the inquiry, for the purpose of identifying conditions indicative of releases or threatened releases at the subject property, as defined in § 312.1(c).

(b) All appropriate inquiries, as outlined in § 312.20, are not complete unless the results of the inquiries take into account the relevant and applicable specialized knowledge and experience of the persons responsible for undertaking the inquiry (as described in § 312.1(b)).

§ 312.29 The relationship of the purchase price to the value of the property, if the property was not contaminated.

(a) Persons to whom this part is applicable per § 312.1(b) must consider whether the purchase price of the subject property reasonably reflects the fair market value of the property, if the property were not contaminated.

(b) Persons who conclude that the purchase price of the subject property does not reasonably reflect the fair market value of that property, if the property were not contaminated, must consider whether or not the differential in purchase price and fair market value is due to the presence of releases or threatened releases of hazardous substances.

(c) Persons conducting site characterization and assessments with the use of a grant awarded under CERCLA section 104(k)(2)(B) and who know that the purchase price of the subject property does not reasonably reflect the fair market value of that property, if the property were not contaminated, must consider whether or not the differential in purchase price and fair market value is due to the presence of releases or threatened releases of hazardous substances, pollutants, contaminants, petroleum and petroleum products, or controlled substances as defined in 21 U.S.C. 802.

§ 312.30 Commonly known or reasonably ascertainable information about the property.

(a) Throughout the inquiries, persons to whom this part is applicable per § 312.1(b) and environmental professionals conducting the inquiry must take into account commonly known or reasonably ascertainable information within the local community about the subject property and consider such information when seeking to identify conditions indicative of releases or threatened releases, as set forth in § 312.1(c), at the subject property.

(b) Commonly known information may include information obtained by the person to whom this part applies in § 312.1(b) or by the environmental professional about releases or threatened releases at the subject property that is incidental to the information obtained during the inquiry of the environmental professional.

(c) To the extent necessary to achieve the objectives and performance factors of § 312.20(e) and (f), persons to whom this part is applicable per § 312.1(b) and the environmental professional must gather information from varied sources whose input either individually or taken together may provide commonly known or reasonably ascertainable information about the subject property; the environmental professional may refer to one or more of the following sources of information:

(1) Current owners or occupants of neighboring properties or properties adjacent to the subject property;

(2) Local and state government officials who may have knowledge of, or information related to, the subject property;

(3) Others with knowledge of the subject property; and

(4) Other sources of information (e.g., newspapers, Web sites, community organizations, local libraries and historical societies).

§ 312.31 The degree of obviousness of the presence or likely presence of contamination at the property, and the ability to detect the contamination by appropriate investigation.

(a) Persons to whom this part is applicable per § 312.1(b) and environmental professionals conducting an inquiry of a property on behalf of such persons must take into account the information collected under § 312.23 through 312.30 in considering the degree of obviousness of the presence of releases or threatened releases at the subject property.

(b) Persons to whom this part is applicable per § 312.1(b) and

environmental professionals conducting an inquiry of a property on behalf of such persons must take into account the information collected under § 312.23 through 312.30 in considering the ability to detect contamination by appropriate investigation. The inquiry of the environmental professional should include an opinion regarding additional appropriate investigation, if any.

[FR Doc. 05–21455 Filed 10–31–05; 8:45 am]

BILLING CODE 6560–50–P

Federal Register

Tuesday,
November 1, 2005

Part IV

Department of Defense

Office of Personnel Management

5 CFR Chapter XCIX and Part 9901

Department of Defense Human Resources Management and Labor Relations Systems; Final Rule

DEPARTMENT OF DEFENSE

OFFICE OF PERSONNEL MANAGEMENT

5 CFR Chapter XCIX and Part 9901

RIN 3206–AK76/0790–AH82

Department of Defense Human Resources Management and Labor Relations Systems

AGENCY: Department of Defense; Office of Personnel Management.

ACTION: Final rule.

SUMMARY: The Department of Defense (DoD or the Department) and the Office of Personnel Management (OPM) are issuing final regulations to establish the National Security Personnel System (NSPS), a human resources management system, within DoD, as authorized by the National Defense Authorization Act (Pub. L. 108–136, November 24, 2003). These regulations govern basic pay, staffing, classification, performance management, labor relations, adverse actions, and employee appeals. These changes are designed to ensure that the Department's human resources management and labor relations systems align with its critical mission requirements and protects the civil service rights of its employees.

DATES: Effective November 28, 2005.

FOR FURTHER INFORMATION CONTACT: At OPM: Nancy Kichak at 202–606–6500; at DoD: Brad Bunn at 703–696–4664.

SUPPLEMENTARY INFORMATION:

Table of Abbreviations

AJ—Administrative Judge
COLA—Cost of Living Adjustment
CONUS—Continental United States
DARPA—Defense Advanced Research Projects Agency
DoD—Department of Defense
ECI—Employment Cost Index
EEO—Equal Employment Opportunity
EEOC—Equal Employment Opportunity Commission
EPI—Extraordinary Pay Increase
FLRA—Federal Labor Relations Authority
FLSA—Fair Labor Standards Act
FMCS—Federal Mediation and Conciliation Service
FSIP—Federal Service Impasses Panel
FWS—Federal Wage System
GAO—Government Accountability Office (former General Accounting Office)
GS—General Schedule
HR—Human Resources
KPP—Key Performance Parameter
LWOP—Leave Without Pay
MRO—Mandatory Removal Offense
MSPB—Merit Systems Protection Board
NAF—Nonappropriated Fund
NAPA—National Academy of Public Administration
NSLRB—National Security Labor Relations Board
NSPS—National Security Personnel System
OMB—Office of Management and Budget
OPM—Office of Personnel Management
PEO—Program Executive Office
PFR—Petition for Review
RFR—Request for Review
SES—Senior Executive Service
SL—Senior Level
ST—Scientific or Professional Positions
WGI—Within-Grade Increase

Table of Contents

This supplementary information section is organized as follows:

Introduction
The Case for Action
Pay and Classification
Performance Management
Staffing, Employment and Workforce Shaping
Adverse Action and Appeals
Labor-Management Relations
Development of the National Security Personnel System
Strategic Engagement and Establishment of the Program Executive Office
Development of Design Options
Guiding Principles and Key Performance Parameters
Communications During the Design Process
Outreach to Employee Representatives
Outreach to Employees
Outreach to Other Stakeholders
Development of Design Options—Working Groups
Publication of Proposed Regulations
Public Comments
Meet-and-Confer Process
Major Issues
Specificity of the Regulations
Pay for Performance and Pay Pool Funding
Adverse Actions and Appeals
Mandatory Removal Offenses
Labor Relations
Management Rights/Scope and Duty to Bargain
Independence of the National Security Labor Relations Board
Response to Specific Comments and Detailed Explanation of Regulations
Subpart A—General Provisions
Section 9901.101—Purpose
Section 9901.102—Eligibility and Coverage
Summary of Coverage Eligibility Chart
Section 9901.103—Definitions
Section 9901.104—Scope of Authority
Section 9901.105—Coordination with OPM
Section 9901.106—Continuing Collaboration
Section 9901.107—Relationship to Other Provisions
Section 9901.108—Program Evaluation
Subpart B—Classification
Section 9901.201—Purpose
Section 9901.202—Coverage
Section 9901.203—Waivers
Section 9901.204—Definitions
Section 9901.211—Career Groups
Section 9901.212—Pay Schedules and Pay Bands
Section 9901.221—Classification Requirements
Section 9901.222—Reconsideration of Classification Decisions
Section 9901.231—Conversion of Positions and Employees to the NSPS Classification System
Subpart C—Pay and Pay Administration
General Comments
Section 9901.301—Purpose
Section 9901.302—Coverage
Section 9901.303—Waivers
Section 9901.304—Definitions
Section 9901.311—Major Features
Section 9901.312—Maximum Rates
Section 9901.313—National Security Compensation Comparability
Section 9901.321—Structure
Section 9901.322—Setting and Adjusting Rate Ranges
Section 9901.323—Eligibility for Pay Increase Associated with a Rate Range Adjustment
Section 9901.331—General
Section 9901.332—Local Market Supplements
Section 9901.333—Setting and Adjusting Local Market Supplements
Section 9901.334—Eligibility for Pay Increase Associated with a Supplement Adjustment
Section 9901.341—General
Section 9901.342—Performance Payouts
Section 9901.343—Pay Reduction Based on Unacceptable Performance and/or Conduct
Section 9901.344—Other Performance Payments
Section 9901.345—Treatment of Developmental Positions
Section 9901.351—Setting an Employee's Starting Pay
Section 9901.352—Setting Pay Upon Reassignment
Section 9901.353—Setting Pay Upon Promotion
Section 9901.354—Setting Pay Upon Reduction in Band
Section 9901.355—Pay Retention
Section 9901.356—Miscellaneous
Section 9901.361—General
Section 9901.371—General
Section 9901.372—Creating Initial Pay Ranges
Section 9901.373—Conversion of Employees to the NSPS Pay System
Subpart D—Performance Management
General Comments
Section 9901.401—Purpose
Section 9901.402—Coverage
Section 9901.403—Waivers
Section 9901.404—Definitions
Section 9901.405—Performance Management System Requirements
Section 9901.406—Setting and Communicating Performance Expectations
Section 9901.407—Monitoring Performance and Providing Feedback
Section 9901.408—Developing Performance and Addressing Poor Performance
Section 9901.409—Rating and Rewarding Performance
Subpart E—Staffing and Employment
General Comments
Section 9901.501—Purpose
Section 9901.502—Scope of Authority
Section 9901.503—Coverage
Section 9901.504—Definitions

Section 9901.511—Appointing Authorities
Section 9901.512—Probationary Periods
Section 9901.513—Qualification Standards
Section 9901.514—Non-Citizen Hiring
Section 9901.515—Competitive Examining Procedures
Section 9901.516—Internal Placement
Subpart F—Workforce Shaping
General Comments
Section 9901.601—Purpose and Applicability
Section 9901.602—Scope of Authority
Section 9901.603—Definitions
Section 9901.604—Coverage
Section 9901.605—Competitive Area
Section 9901.606—Competitive Group
Section 9901.607—Retention Standing
Section 9901.608—Displacement, Release, and Position offers
Section 9901.609—Reduction in force Notices
Section 9901.610—Voluntary Separation
Section 9901.611—Reduction in force Appeals
Subpart G—Adverse Actions
General Comments
Section 9901.701—Purpose
Section 9901.702—Waivers
Section 9901.703—Definitions
Section 9901.704—Coverage
Section 9901.711—Standard for Action
Section 9901.712—Mandatory Removal Offenses
Section 9901.714—Proposal Notice
Section 9901.715—Opportunity to Reply
Section 9901.716—Decision Notice
Section 9901.717—Departmental Record
Subpart H—Appeals
General Comments
Section 9901.802—Applicable Legal Standards and Precedents
Section 9901.803—Waivers
Section 9901.804—Definitions
Section 9901.805—Coverage
Section 9901.806—Alternative Dispute Resolution
Section 9901.807—Appellate Procedures
Section 9901.808—Appeals of Mandatory Removal Actions
Section 9901.809—Actions Involving Discrimination
Subpart I—Labor-Management Relations
General Comments
Section 9901.901—Purpose
Section 9901.902—Scope of Authority
Section 9901.903—Definitions
Section 9901.904—Coverage
Section 9901.905—Impact on Existing Agreements
Section 9901.906—Employee Rights
Section 9901.907—National Security Labor Relations Board
Section 9901.908—Powers and Duties of the Board
Section 9901.909—Powers and Duties of the Federal Labor Relations Authority
Section 9901.910—Management Rights
Section 9901.911—Exclusive Recognition of Labor Organizations
Section 9901.912—Determination of Appropriate Units for Labor Organization Representation
Section 9901.913—National Consultation
Section 9901.914—Representation Rights and Duties
Section 9901.916—Unfair Labor Practices
Section 9901.917—Duty to Bargain and Consult
Section 9901.918—Multi-Unit Bargaining
Section 9901.919—Collective Bargaining Above the Level of Recognition
Section 9901.920—Negotiation Impasses
Section 9901.921—Standards of Conduct for Labor Organizations
Section 9901.922—Grievance Procedures
Section 9901.923—Exceptions to Arbitration Awards
Section 9901.924—Official Time
Section 9901.925—Compilation and Publication of Data
Section 9901.926—Regulations of the Board
Section 9901.927—Continuation of Existing Laws, Recognitions, Agreements, and Procedures
Section 9901.928—Savings Provisions
Next Steps
NSPS Implementation
Employee Transition Plan (Spiral Strategy)
HR and Labor Relations Transition
Development of Implementing Issuances and Continuing Collaboration Training
Regulatory Requirements
E.O. 12866—Regulatory Review
Regulatory Flexibility Act
E.O. 12988—Civil Justice Reform
E.O. 13132—Federalism
Paperwork Reduction Act of 1995 (44 U.S.C. chapter 35)
Unfunded Mandates

Introduction

The Secretary of Defense, Donald Rumsfeld, and the Director of the Office of Personnel Management, Linda M. Springer, jointly prescribe this final regulation to establish a flexible and contemporary system, consistent with statutory merit system principles and prohibitions against prohibited personnel practices (in 5 U.S.C. 2301 and 2302, respectively), for managing the Department's human capital. This system has been developed pursuant to a process based on extensive outreach to employees and employee representatives. In addition, DoD and OPM have engaged in outreach to the public as well as to the Congress and other key stakeholders. As enacted by section 1101 of the National Defense Authorization Act (Pub. L. 108–136, November 24, 2003, hereinafter referred to as ''enabling legislation'' or ''enabling statute'') and codified at 5 U.S.C. 9902, the system preserves all core civil service protections, including merit system principles, veterans' preference, and due process. It also protects against discrimination, retaliation against whistleblowers, and other prohibited personnel practices, and ensures that employees may organize and bargain collectively (when not otherwise prohibited by law, including these regulations, applicable Executive orders, and any other legal authority).

This Supplementary Information addresses the following areas:

- The Case for Action
- Summary of the Design Process
  - Strategic Engagement and Establishment of the Program Executive Office
  - Development of Design Options
  - Meet-and-Confer Process
- Major Issues
- Response to Specific Comments and Detailed Explanation of Regulations
- Next Steps

The Case for Action

''* * * a future force that is defined less by size and more by mobility and swiftness, one that is easier to deploy and sustain, one that relies more heavily on stealth, precision weaponry, and information technologies.''

With that statement on May 25, 2001, President Bush set a new direction for defense strategy and defense management—one toward transformation. On January 31, 2002, Secretary of Defense Donald Rumsfeld echoed the sentiments expressed by President Bush, stating that ''[a]ll the high-tech weapons in the world will not transform the U.S. armed forces unless we also transform the way we think, the way we train, the way we exercise, and the way we fight.''

Transformation *is* more than acquiring new equipment and embracing new technology—it is the process of working and managing creatively to achieve real results. To transform the way DoD achieves its mission, it must transform the way it leads and manages the people who develop, acquire, and maintain our Nation's defense capability. Those responsible for defense transformation—including DoD civilian employees—must anticipate the future and wherever possible help create it. The Department must seek to develop new capabilities to meet tomorrow's threats as well as those of today. NSPS is a key pillar in the Department of Defense's transformation—a new way to manage its civilian workforce. NSPS is essential to the Department's efforts to create an environment in which the Total Force (military personnel, civilian employees, and contractors) thinks and operates as one cohesive unit.

DoD civilians are unique in government: They are an integral part of an organization that has a military function. DoD civilians must complement and support the military around the world in every time zone, every day. Just as new threats, new missions, new technology, and new tactics are changing the work of the military, they are changing the work of our 700,000 civilians. To support the

interests of the United States in today's national security environment—where unpredictability is the norm and greater agility the imperative—civilians must be an integrated, flexible, and responsive part of the team.

At best, the current personnel system is based on 20th century assumptions about the nature of public service and cannot adequately address the 21st century national security environment. Although the current Federal personnel management system is based on important core principles, those principles are operationalized in an inflexible, one-size-fits-all system of defining work, hiring staff, managing people, assessing and rewarding performance, and advancing personnel. These inherent weaknesses make support of DoD's mission complex, costly, and ultimately risky. Currently, pay and the movement of personnel are pegged to outdated, narrowly defined work definitions; hiring processes are cumbersome; high performers and low performers are paid alike; and the labor system encourages a dispute-oriented, adversarial relationship between management and labor. These systemic inefficiencies detract from the potential effectiveness of the Total Force. A more flexible, mission-driven system of human resources management that retains those core principles will provide a more cohesive Total Force. The Department's 20 years of experience with transformational personnel demonstration projects, covering nearly 30,000 DoD employees, has shown that fundamental change in personnel management has positive results on individual career growth and opportunities, workforce responsiveness, and innovation; all these things multiply mission effectiveness.

The immense challenges facing DoD today require a civilian workforce transformation: Civilians are being asked to assume new and different responsibilities, take more risk, and be more innovative, agile, and accountable than ever before. It is critical that DoD supports the entire civilian workforce with modern systems—particularly a human resources management system and a labor relations system that support and protect their critical role in DoD's Total Force effectiveness. The enabling legislation provides the Department of Defense with the authority to meet this transformation challenge.

More specifically, the law provides the Department and OPM—in collaboration with employee representatives—authority to establish a flexible and contemporary system of civilian human resources management for DoD civilians. The attacks of September 11 and the continuing war on terrorism make clear that flexibility is not a policy preference. It is nothing less than an absolute requirement, and it must become the foundation of DoD civilian human resources management.

NSPS is designed to promote a performance culture in which the performance and contributions of the DoD civilian workforce are more fully recognized and rewarded. The system offers the civilian workforce a contemporary pay-banding construct, which will include performance-based pay. As the Department moves away from the General Schedule system, it will become more competitive in setting salaries and it will be able to adjust salaries based on various factors, including labor market conditions, performance, and changes in duties. The HR management system is a foundation for a leaner, more flexible support structure and will help attract skilled, talented, and motivated people, while also retaining and improving the skills of the existing workforce.

Despite the professionalism and dedication of DoD civilian employees, the limitations imposed by the current personnel system often prevent managers from using civilian employees effectively. The Department sometimes uses military personnel or contractors when civilian employees could have and should have been the right answer. The current system limits opportunities for civilians at a time when the role of DoD's civilian workforce is expanding to include more significant participation in Total Force effectiveness. NSPS will generate more opportunities for DoD civilians by easing the administrative burden routinely required by the current system and providing an incentive for managers to turn to them first when certain vital tasks need doing. This will free uniformed men and women to focus on matters unique to the military.

The law requires the Department to establish a contemporary and flexible system of human resources management. DoD and OPM crafted NSPS through a collaborative process involving management, employees, and employee representatives. DoD leadership will ensure that supervisors and employees understand the new system and can function effectively within it. The system retains the core values of the civil service and allows employees to be paid and rewarded based on performance, innovation, and results. In addition, the system provides employees with greater opportunities for career growth and mobility within the Department.

A key to the success of NSPS is ensuring employees perceive the system as fair. In a human resources management system, fairness is the basis for trust between employees and supervisors. The Department's mission cannot be accomplished without the workforce. It is a tenet of the Department that employees will exercise personal responsibility and sustain a high level of individual performance and teamwork when they perceive that the human resources system and their supervisors are fair.

The Department and the Office of Personnel Management are addressing fairness in the National Security Personnel System in several dimensions: System design; the right to seek review of important categories of management decisions; workforce access to information about system provisions, processes, and decision criteria; and accountability mechanisms.

NSPS regulations and implementing issuances will include rules to guard against arbitrary actions. Examples include written performance expectations, the guarantee that employees rated higher than ''unacceptable'' will receive the full minimum by which their pay rate range is adjusted, the requirement to prescribe the conditions for probationary periods established by the Secretary, public notice of vacancies when the Department is recruiting externally, and prohibition against establishing reduction in force competitive areas that target an individual employee on the basis of non-merit factors.

NSPS continues employees' and labor organizations' rights to challenge or seek review of key decisions. For example, all employees will be able to request reconsideration of their performance ratings through an administrative grievance procedure. Bargaining unit employees will also have the option of using a negotiated grievance procedure. Employees must be notified in advance of a proposed adverse action, be given time and opportunity for reply, and be given a decision notice that includes the reasons for the decision. Labor organization officials may file unfair labor practice claims or grievances.

The Department and its Components will make information about NSPS rules, policies, and practices readily available to the workforce in the form of published regulations, published implementing issuances, local level instructions, training, and other sources.

The last dimension of accountability for fair decisions and practices under NSPS will call on two major streams of information. First, human resources management accountability reviews

within the Department will be used to identify and address issues regarding the observance of merit system principles and regulatory and policy requirements, including those established under NSPS. In addition, the Department will monitor the outcomes of administrative and negotiated grievances, performance rating reconsiderations, equal employment opportunity complaints, and whistleblower complaints to correct chronic problems and particular failings.

The second stream will be NSPS program evaluation findings. These will enable the Secretary and the Director to determine whether the design of NSPS and the pattern of its results meet statutory requirements like fairness and equity and the specific performance expectations of the NSPS Requirements Document for a credible and trusted system. Section 9901.108 of these final regulations codifies the requirement for NSPS program evaluation. It opens to designated employee representatives the design and results of evaluations of particular NSPS aspects so that they can provide comments and recommendations to help ensure balanced and fair methods and conclusions. A robust and long-term NSPS program evaluation plan of studies and reviews, transactional data analyses, opinion surveys, and other evaluative methods will be fielded with NSPS implementation.

Fairness in NSPS is not a specific thing, but rather an intrinsic quality being built into the design of a flexible human resources management system—one to be accounted for during reviews and evaluations of NSPS operations and decisions.

A. Pay and Classification

The NSPS pay and classification system will provide a more flexible support structure that will help attract skilled, talented, workers; retain and appropriately reward current employees; and create opportunities for civilians to participate more fully in the total integrated workforce. A pay banding structure will replace the artificial limitations created by the current pay and classification systems. With broad pay bands, the Department will be able to move employees more freely across a range of work opportunities without being bound by narrowly described work definitions. The pay structure will be much more responsive to market conditions. The Department will be able to adjust rate ranges and local market supplements based on variations relating to specific occupations, rather than the current one-size-fits all approach. Labor market conditions will also be considered when making pay-setting decisions. As prescribed in the enabling legislation, the new compensation system will better link individual pay to performance using performance rather than time on the job to determine pay increases.

B. Performance Management

In recognition of the increased importance of performance in making pay and retention decisions, the Department has created a much more robust performance management system.

The Department will use a multi-level system that makes distinctions in levels of employee performance. The system will link employee achievements, contributions, knowledge, and skills to organizational results. It will also allow the Department to better recognize and support team contributions and accomplishments. Performance expectations will be clearly communicated to employees and will be linked to the organization's strategic goals and objectives. The ability to recognize valid distinctions in performance and reward employees based on those distinctions will foster a high performance culture within the Department.

C. Staffing, Employment and Workforce Shaping

NSPS will retain the merit system principles and veterans' preference while giving the Department the flexibility necessary to streamline the hiring process and adapt quickly to critical mission needs. The Department will be able to use direct-hire authority for severe shortage or critical needs. NSPS will also provide for a more efficient process for creating appointing authorities, in conjunction with the Office of Personnel Management, as new requirements emerge. As part of this process, the system provides for transparency and public awareness through notice in the **Federal Register**. The new pay-setting flexibilities will also enhance the Department's ability to attract and retain the talented workforce necessary to accomplish its mission.

Through workforce shaping flexibilities, the Department will create a reduction in force system that places more emphasis on performance while continuing to protect veterans' preference rights. The downsizing process will be less disruptive to employees and the mission. The Department will continue to fully utilize tools such as separation incentives and the Priority Placement Program to avoid and mitigate the impact of any reductions it faces.

D. Adverse Actions and Appeals

Consistent with the enabling legislation, the final regulations streamline and simplify adverse actions and appeals procedures, but without compromising due process for DoD employees. Employees will still receive notice of a proposed adverse action, the right to reply, and the right to appeal to the Merit Systems Protection Board (MSPB). In the proposed regulations, we proposed to replace the two existing authorities and adopt a single process and standard for all actions whether based on unacceptable performance or misconduct. In doing so, we proposed to adopt the higher of the two current burdens of proof—''preponderance of the evidence''—rather than the lower standard—''substantial evidence.'' We have retained this higher burden of proof. In addition, the final regulations clarify that the full MSPB's standard for review is as specified in the enabling legislation. The final regulations retain authority for the Secretary to establish a number of mandatory removal offenses (MROs) that have a direct and substantial adverse effect on the Department's national security mission. The final regulations also retain authority for the Department to review decisions of MSPB Administrative Judges who are the first step in the NSPS appeals process.

E. Labor Management Relations

To ensure that the Department has the flexibility to carry out its vital mission, as authorized by the enabling legislation, the regulations, among other things, revise management's rights and its duty to bargain to ensure that the Department can act as and when necessary. Collective bargaining is prohibited on such critical matters as procedures observed in making work assignments and deployments unless the Secretary, in his or her sole, exclusive, and unreviewable discretion, elects to bargain. The Secretary may authorize bargaining on these matters to advance the Department's mission accomplishment or promote organizational effectiveness. If the Secretary does not elect to bargain procedures on these matters, consultation is required. Management and exclusive representatives will negotiate over changes that have foreseeable, significant, and substantial impact, as well as appropriate arrangements for employees affected by those changes, under certain specified conditions. Additionally, the regulations create the National Security

Labor Relations Board (NSLRB) to address those issues that are most important to accomplishing the DoD mission, with other matters retained by the Federal Labor Relations Authority (FLRA). The regulations provide the Secretary discretion as to when the NSLRB will be in place. The regulations also provide the Secretary discretion, in consultation with the Director, to designate another third party to exercise the authority of the Board in the interim. The revisions to the regulations strike the right balance between the mission needs of DoD and the meaningful involvement of employees and their representatives.

Development of the National Security Personnel System

A. Strategic Engagement and Establishment of Program Executive Office

While dialogue with employee representatives began in January 2004, in April senior DoD leadership initiated a collaborative process to design and implement NSPS. This process was crafted by a group of 25 to 30 senior experts representing DoD, OPM, and the Office of Management and Budget. The Defense Acquisition Management model was used to establish the requirements for the design and implementation of NSPS, including Guiding Principles and Key Performance Parameters (KPPs), which defined the minimum requirements for NSPS. The Honorable Gordon R. England was appointed by the Secretary of Defense as the NSPS Senior Executive. As the NSPS Senior Executive, Secretary England established the NSPS Program Executive Office (PEO) as the central DoD policy and program office to conduct the design, planning and development, deployment, assessment, and full implementation of NSPS.

The entire process was accomplished jointly with OPM. An integrated executive management team composed of senior DoD and OPM leaders provided overall policy and strategic advice to the PEO and served as staff to the Senior Executive.

B. Development of Design Options

Guiding Principles and Key Performance Parameters

In setting up the process for the design of the system, senior leadership adopted a set of Guiding Principles as a compass to direct efforts throughout all phases of NSPS development. They translate and communicate the broad requirements and priorities outlined in the enabling legislation into concise, understandable requirements that underscore the Department's purpose and intent in creating NSPS. The Guiding Principles are:

- Put mission first—support National Security goals and strategic objectives;
- Respect the individual—protect rights guaranteed by law;
- Value talent, performance, leadership and commitment to public service;
- Be flexible, understandable, credible, responsive, and executable;
- Ensure accountability at all levels;
- Balance HR interoperability with unique mission requirements; and
- Be competitive and cost effective.

In addition, senior leadership approved a set of Key Performance Parameters (KPPs), which define the minimum requirements and/or attributes of the system. Those KPPs are summarized below:

- High Performing: Employees/supervisors are compensated/retained based on performance/contribution to mission;
- Agile and Responsive: Workforce can be easily sized, shaped, and deployed to meet changing mission requirements;
- Credible and Trusted: System assures openness, clarity, accountability and merit principles;
- Fiscally Sound: Aggregate increases in civilian payroll, at the appropriations level, will conform to OMB fiscal guidance, and managers will have flexibility to manage to budget;
- Supporting Infrastructure: Information technology support and training and change management plans are available and funded; and
- Schedule: NSPS will be operational and demonstrate success prior to November 2009.

Communications During the Design Process

In undertaking a project of this magnitude, impacting over 700,000 civilians of the Department, it was essential to ensure the availability of information on the new HR and labor relations systems. It was also critical to solicit the views and ideas of employees, employee representatives and other stakeholders.

In April 2004, the PEO developed and implemented a communications strategy. The objectives of DoD's communications strategy are to (1) demonstrate the rationale for and benefits of NSPS; (2) demonstrate openness and transparency in the design and process of converting to NSPS; (3) express DoD's commitment to ensuring NSPS is applied fairly and equitably; and (4) address potential criticism of NSPS.

The PEO identified numerous channels for disseminating relevant, timely, and consistent information. These include: Print and electronic media; e-mail; town hall meetings; focus groups; speeches; and briefings. A website was developed to serve as a primary, two-way communications tool for the workforce, other stakeholders, and the general public. The website includes the capability for visitors to submit questions and comments. The PEO has responded to thousands of questions and comments.

The website will remain available during implementation and will provide current information for managers, supervisors and employees.

Outreach to Employee Representatives

In January and February 2004, we met with union leaders for the purpose of exchanging ideas and interests on a new labor relations system. All unions holding DoD national consultation rights (NCR) at the time were invited to the January 22, 2004, meeting. Seven of these eight NCR unions elected to attend. In addition, one additional union without DoD national consultation rights was invited to attend and participated in the January 22, 2004, meeting. Union leadership from all of the 43 unions representing DoD employees were invited to attend and participate in the February 26–27, 2004, meeting. Twenty-six unions attended and participated in the February 2004 meeting.

In the spring of 2004 and continuing over the course of several months, we sponsored a series of additional meetings with union leadership to discuss design elements of NSPS. Officials from DoD and OPM met throughout the summer and fall with union officials representing many of the DoD civilians who are bargaining unit employees. These sessions provided the opportunity to discuss the design elements, options, and proposals under consideration for NSPS and solicit union feedback.

During this time, 10 meetings (in addition to the 2 meetings held in January and February 2004) were held with officials of the 43 unions that represent DoD employees, including the 9 unions that currently have national consultation rights. These union officials represent over 1,500 separate bargaining units covering about 450,000 employees. These meetings involved as many as 80 union leaders from the national and local level at any one time, and addressed a variety of topics, including: The reasons change is needed and the Department's interests; employee communications; and

proposed design options in the areas of labor relations and collective bargaining, adverse actions and appeals, and pay and performance management.

Outreach to Employees

In keeping with DoD's commitment to provide employees and managers an opportunity to participate in the development of NSPS, the PEO sponsored a number of Focus Group sessions and town hall meetings at various sites across DoD. In mid-July 2004, a total of 106 focus groups were held throughout DoD, including overseas locations. Separate focus groups were held for employees, civilian and military supervisors, and managers and practitioners from HR, legal and EEO communities. Bargaining unit employees and union leaders were invited to participate. For the major system design elements, focus group participants were asked what they thought worked well in the current HR systems and what they thought should be changed. Over 10,000 comments, ideas and suggestions received during the focus group sessions were summarized and provided to NSPS Working Groups for use in developing options for the labor relations, appeals, adverse actions, and human resources design elements of NSPS.

In addition, town hall meetings were held in DoD facilities around the world during the summer of 2004, providing an opportunity to communicate with the workforce, provide the status of the design and development of NSPS, and solicit thoughts and ideas. The NSPS Senior Executive, Secretary England, conducted the first town hall meeting at the Pentagon on July 7, 2004. Some of the town hall meetings were broadcast live, as well as videotaped and rebroadcast on military television channels and websites to facilitate the widest possible dissemination.

Outreach to Other Stakeholders

In addition to reaching out to DoD employees and labor organizations, DoD and OPM met with other groups who were thought to be interested in the design of a new HR system for DoD. DoD and OPM invited selected stakeholders to participate in briefings held at OPM in August and September 2004.

Those invited to the briefings included: Public interest groups, such as the National Academy of Public Administration (NAPA), Coalition for Effective Change, and Partnership for Public Service; veterans' service organizations; and non-union employee advocacy groups. Both before and after these briefings, DoD and OPM responded to dozens of requests for special briefings. DoD and OPM also met with the Government Accountability Office, Office of Management and Budget, and Department of Homeland Security to keep them up to date on the team's activities; and consulted with the Merit Systems Protection Board on the appeals process to ensure that it provides employees the protections of due process.

Development of Design Options—Working Groups

In order to incorporate all the information and develop options, the PEO established functionally aligned Working Groups. Over 120 employees representing the Military Departments (Army, Navy, Air Force), other DoD Components, and OPM participated in the process.

The Working Groups reviewed all available information, including: Pertinent laws, rules, regulations; input from NSPS focus groups and town hall; union consultation meetings; data review and analysis from alternative personnel systems and laboratory and acquisition demonstration projects; the enabling legislation; and Guiding Principles and Key Performance Parameters. In addition, subject matter experts briefed the Working Groups on a variety of topics, such as pay-for-performance systems, alternative personnel systems, pay pool management, and market sensitive compensation systems.

In developing options for the NSPS, the Working Groups benefited from the Government's experience under demonstration project authorities (*e.g.* the China Lake Demonstration Project originally authorized by section 6 of the Civil Service Miscellaneous Amendments Act of 1983; the Defense reinvention laboratory demonstration projects authorized by section 342 of the National Defense Authorization act for fiscal year 1995, as amended; and the Acquisition Workforce Demonstration Project, authorized be section 4308 of the National Defense Authorization Act for fiscal year 1996, as amended) and alternative personnel systems (*e.g.* the Defense Intelligence Personnel System, the Government Accountability Office, and the Federal Aviation Administration), the DoD ''Best Practices'' initiative (68 FR 16120, April 2, 2003), and the compilation of research materials from the Department of Homeland Security HR Systems Design process.

At the conclusion of the process, the Working Groups provided a set of options covering a broad range of variations on the six areas of focus: (1) Compensation (classification and pay banding); (2) performance management; (3) hiring, assignment, pay setting, and workforce shaping; (4) employee engagement; (5) adverse action and appeals; and (6) labor relations. Each option was evaluated against the Guiding Principles and KPPs.

Potential options presented a wide range of views and concerns. The PEO and senior leaders representing organizations within DoD reviewed all the options. After extensive discussion, the selected options were presented to the Overarching Integrated Product Team (OIPT) for review and the Senior Executive for approval.

Publication of Proposed Regulations

These extensive and collaborative design efforts all preceded the formal process for developing the new HR and labor relations systems. The enabling legislation established a formal process in this regard, officially beginning when the Secretary and the Director published proposed regulations to establish the new DoD HR and labor relations systems in the **Federal Register** on February 14, 2005. The process was designed to ensure collaboration with employee representatives in the design and implementation of the new HR and labor relations systems.

The first formal step provided a 30-day period for the public, employees, and employee representatives to review and submit formal comments on the proposed system. The second step provided for a minimum of 30 days to ''meet and confer'' with employee representatives in order to attempt to reach agreement on the design of the new system. The third step required notification to Congress on the decision to implement the new system. The new system becomes effective 30 days after congressional notification.

C. Public Comments

In response to the proposed rule, the Department received 58,538 comments during 30-day public comment period. The Department received comments from a wide variety of individuals including DoD civilian and military personnel, DoD organizations, labor organizations, other Federal agencies, Members of Congress and the general public. At the conclusion of the public comment period, and continuing over the next several months, DoD and OPM staff reviewed and analyzed the comments.

In general, the comments ranged from overall rejection of the proposed regulations to enthusiastic acceptance. Many comments focused on the need for

fairness in the system and the need for training of employees and managers. Concerns were expressed about maintaining due process and the scope of bargaining.

Many of the comments were from national labor organizations and their members.[1] Almost 80 percent of the comments were form letters submitted by email or letter.[2] The form letters expressed general opposition to the proposed regulations. These submissions expressed concerns that the proposed regulations lacked sufficient specificity. The comments also expressed a desire to remain with the current system, citing too much power being given to managers and supervisors, with no corresponding accountability. Specific concerns included: Adequate funding of pay pools; deployment of civilians to war zones; and the lack of third-party review for performance appraisals, adverse actions and labor disputes. There was also concern that the regulations did not adhere to congressional intent to maintain the requirements of the applicable labor relations statutes. Approximately 415 of the commenters included substantive analysis of the proposed regulations. Virtually all of these comments favor some changes, along with a wide variety of views on the merits of the proposed regulations.

Acknowledging that there are strong views on the proposals presented, DoD and OPM reviewed and carefully considered all the comments and the arguments made for and against the proposed changes.

The major comments received on the proposed regulatory changes are summarized below, together with a discussion of the changes made as a result of the comments. Also summarized are the suggestions for changes considered where no change is being made. In addition to the more substantive comments discussed below, a number of editorial suggestions were made, some of which have been adopted and others which have not. A number of other changes have been made to better organize or structure the regulatory text. Finally, we received a number of comments on issues that go beyond the scope of these regulations, which are not addressed in the discussion that follows.

[1] DoD has 43 different unions representing over 1,500 separate bargaining units covering about 450,000 employees. In the spring of 2004, thirty-six unions joined together to form the United Department of Defense Workers Coalition (''the Coalition'').

[2] There were 41 different form letters totaling 43,714 comments. An additional 1,850 form letters were received with additional comments added by the commenter.

D. The Meet-and-Confer Process

The public comment period was followed by the second step in the formal development process—an additional 30-day period during which DoD and OPM representatives were to meet and confer with employee representatives to resolve differences over the proposed regulations wherever possible.

The meet-and-confer process began officially in April 2005. On April 8, 2005, a meeting with labor organizations was held to discuss procedures to be followed during the meet-and-confer process.

The following principals participated in the meet-and-confer process:

- Forty-three labor organizations were invited to participate. Thirty-six of those labor organizations were represented by a ''coalition'' led by the AFL–CIO, and were authorized to send an unlimited number of representatives. Eighteen of the labor organizations chose to send representatives. The actual number of representatives present in the room typically ranged from 25 to 50.
- The coalition includes: American Federation of State, County and Municipal Employees (AFSCME); American Nurses Assn. (ANA); Antilles Consolidated Education Assn. (ACEA); Assn. of Civilian Technicians (ACT); American Federation of Government Employees (AFGE); American Federation of Teachers (AFT); Communications Workers of America (CWA); Fairchild Federal Employees Union (FFEU); Federal Education Assn. (FEA); Int'l. Assn. of Machinists and Aerospace Workers (IAMAW); Graphic Communications International Union (GCIU); Hawaii Council of Commissary Dept. of Defense Unions (HCCDU); Int'l. Brotherhood of Boilermakers; Int'l. Assn. of Fire Fighters (IAFF); Int'l. Assn. of Tool Craftsman (IATC); Int'l. Brotherhood of Electrical Workers (IBEW); Int'l. Brotherhood of Teamsters, Chauffeurs, Warehousemen and Helpers of America (IBT); Int'l. Guard Union of America (IGUA); Int'l. Union of Operating Engineers (IUOE); Int'l. Union of Painters and Allied Trades (IUPAT); Int'l. Federation of Professional and Technical Engineers (IFPTE); Int l. Organization of Masters, Mates and Pilots (IOMMP); Laborers International Unions (LIUNA); National Marine Engineers Beneficial Assn. (MEBA); Metal Trades Dept./AFL–CIO (MTD); National Assn. of Aeronautical Examiners (NAAE); National Air Traffic Controller Assn. (NATC); National Federation of Federal Employees (NFFE); National Assn. of Gov. Employees (NAGE); Professional Airways Systems Specialists (PASS); Retail Wholesale, and Department Store Union (RWDSU); Seafarers Int'l. Union of North America (SIUNA); Service Employees International Union (SEIU); Sheet Metal Workers Int'l. Assn. (SMWIA); Sport Air Traffic Controllers (SPORT); United Assn. of Journeymen and Apprentices of the plumbing, sprinkler fitting industry of the U.S. and Canada (UA); United Nurses Assn. of California (UNAC); and United Power Trades Org. (UPTO)
- Other unions also participated in the meet-and-confer process. These include: Fraternal Order of Police (FOP) and the National Assn. of Independent Labor (NAIL).
- Five representatives from DoD, including the Principal Deputy Under Secretary of Defense (Personnel and Readiness), the Program Executive Officer, the Deputy PEO, and two senior program managers.
- Two senior executives from the Office of Personnel Management (OPM) and various senior program managers as necessary.

The Secretary, in consultation with the Acting Director,[3] also requested the services of the Federal Mediation and Conciliation Service for the entire meet-and-confer process. Face-to-face meet-and-confer sessions occurred from April 18, 2005, through June 2, 2005. During that period, the parties met for 19 days, with other days spent preparing for meetings and exchanging recommendations for amendments to the regulations. The Department provided 36 written recommendations to revise the regulations as well as 14 recommended clarifications of intent. The unions presented revised regulations for each subpart of the proposed regulations in addition to other revisions covering such topics as—exigencies and post-implementation bargaining, implementing issuances, and third-party review of performance appraisals and adverse actions. At the conclusion of the meet-and-confer process, the NSPS Senior Executive and the Acting Director of OPM met with representatives from the labor organizations in mid-June 2005, to provide them with an opportunity to present their issues and concerns directly to the principals.

The review of the public comments and the proposals during the meet-and-confer process has led to significant revisions of the proposed regulations. Some of the revisions are substantial,

[3] During this period of time, the Honorable Dan Blair was Acting Director of the Office of Personnel Management. On June 28, 2005, the Honorable Linda M. Springer was sworn in as OPM's Director.

such as extending employees the right to grieve performance ratings of record, restricting authority to issue implementing issuances [4] that supersede inconsistent provisions of collective bargaining agreements, changing the standard for mitigating penalties, providing an opportunity for labor organizations to submit names of potential members of the NSLRB, and retaining the current interest of justice standard for payment of attorney fees. Other revisions are purely technical.

Significant differences with many of the labor organizations remain over such issues as the scope of bargaining, implementing issuances that supersede conflicting provisions of collective bargaining agreements, the specificity of the regulations, the ability to grieve pay decisions, the use of behavior as part of performance evaluation and the use of performance in a reduction in force. These differences cannot be reconciled with the need for a contemporary and flexible system of human resources management as DoD seeks to transform the civilian part of the Total Force of military personnel, civilian employees, and DoD contractors. The current system limits opportunities for civilians at a time when the role of DoD's civilian workforce is expanding to include more significant participation in Total Force effectiveness. NSPS will generate more opportunities for DoD civilians by easing the administrative burden routinely required by the current system. It will provide an incentive for managers to (1) identify military positions that can be converted to civilian and (2) to turn to civilians first when certain vital tasks need doing. This will free military men and women to focus on matters unique to the military, while greatly increasing the role of the Department's civilian employees. The need for a flexible and contemporary system to support the Department's national security mission is nothing less than an absolute requirement and it must become the foundation of DoD civilian human resources management.

Where we indicate agreement in this Supplementary Information, we are referring to agreements reached between DoD and OPM, after consideration of public comments and proposals made during the meet-and-confer process, rather than to agreements reached between management and labor organization representatives during the meet-and-confer process.

[4] Implementing issuances are defined in § 9901.103 of the regulations. Issuances are defined in § 9901.903.

Major Issues

The 58,538 public comments, in addition to the face-to-face discussions during the meet-and-confer process, clearly defined the issues that were of most concern to DoD civilians potentially covered by all or parts of NSPS. Major issues identified were as follows: (a) Specificity of the Regulations; (b) Pay for Performance and Pay Pool Funding; (c) Adverse Actions and Appeals; (d) Mandatory Removal Offenses; (e) Labor Relations; (f) Management Rights/Scope and Duty to Bargain; and (g) Independence of the NSLRB. Because these issues are critical to understanding the objectives of the Department's new HR and labor relations systems, as well as the implementation of NSPS, we have given them particular attention in the following sections of this **SUPPLEMENTARY INFORMATION**.

a. Specificity of the Regulations

A significant issue raised in the public comments and during the meet-and-confer process concerns the lack of specificity in the proposed regulations. Many of the commenters recommended that the regulations include far greater specificity, while others referred to the inability to provide substantive comments on the proposed rule without more information.

These comments and concerns focused almost exclusively on the subparts establishing the HR system—those dealing with Subpart B—Classification, Subpart C—Pay and Pay Administration, Subpart D—Performance Management, Subpart E—Staffing and Employment, and Subpart F—Workforce Shaping. Those subparts remain relatively general in nature and expressly provide for the Department to develop implementing issuances to carry out the policies established in accordance with NSPS. In contrast, the subparts dealing with adverse actions, appeals, and labor relations (subparts G, H, and I, respectively) are more detailed, requiring fewer implementing issuances.

The law requires the Department to establish a contemporary and flexible system of human resources management (see 5 U.S.C. 9902(b) (1) and (2)). Of all of the various objectives set by Congress for this system in the enabling legislation, flexibility was the very first enumerated. Unnecessary and excessive detail in subparts B, C, D, E, and F would undermine that objective. The regulations provide the overall framework for the new HR system without the inflexible requirements present in today's system. In response to these comments, and as a result of the meet-and-confer process, we have added greater detail to certain sections of the subparts at issue. These additions are documented at length in our responses to the detailed comments that follow.

However, even with added detail, all five of the subparts at issue retain their original structure in the final regulations, establishing a general policy framework to be supplemented by detailed Departmental implementing issuances. We believe this is the appropriate approach, providing the Department the flexibility it requires in implementing an HR system of this scope.

Labor organization comments focus primarily on process, asserting that by including greater detail in the proposed regulations, they would have been given an opportunity to participate and provide input to the final regulations via the statutory meet-and-confer process set forth in 5 U.S.C. 9902(f)(1)(A)–(C). Among other things, that statutory process requires the Department and OPM to provide employee representatives with an opportunity to comment on the proposed regulations and, thereafter, meet with DoD and OPM officials (under the auspices of the Federal Mediation and Conciliation Service, if necessary) in an attempt to resolve any concerns and disagreements. As the labor organizations and other commenters have correctly pointed out, the proposed regulations did not provide for an analogous opportunity with respect to the development of implementing issuances. This became a major topic of discussion during the meet-and-confer process, with labor organizations insisting that DoD and OPM either include all implementing details in these final regulations or subject the Department's implementing issuances to collective bargaining. We did not adopt either alternative. Including such detail in these regulations would not provide the Department the flexibility its mission requires. In addition, collective bargaining over the content of implementing issuances is prohibited by the enabling legislation.

In summary, the inflexibility of the current system required new ways to meet the rapidly changing requirements for DoD civilians to provide support to the military members. A standardized, yet flexible DoD environment that promotes the growth of all employees and improves the manager's ability to manage the workforce is essential. The regulations were developed to provide the Department the ability to maintain flexibility, while at the same time involving employee representatives in

the details of new processes established through implementing issuances.

Five of the subparts in these final regulations remain relatively general in nature, providing broad policy parameters but leaving much of the details to implementing issuances. We believe this structure, patterned after the chapters in title 5 that they replace, is appropriate. By providing for detailed implementing issuances, the subparts dealing with Classification, Pay and Pay Administration, Performance Management, Staffing and Employment, and Workforce Shaping provide the Department with the flexibility mandated by Congress, and they do so without compromising the Department's commitment to substantive employee representative involvement in the development of those implementing issuances.

b. Pay for Performance and Pay Pool Funding

The pay system we described in the proposed regulations was designed to fundamentally change the way we pay employees in the Department of Defense. Instead of a pay system based primarily on tenure and time-in-grade, we proposed a system that bases individual pay increases on performance. This proposal honors major points that were debated by the Congress and agreed upon with the passage of the enabling legislation. In addition, the proposed pay system would be far more market-sensitive than the current pay system. The proposed changes relating to classification, pay, and performance management were designed to achieve these two primary goals.

A number of commenters agreed with the proposal to create a more occupation-specific and market- and performance-based classification and pay system. However, most commenters strongly recommended that we maintain the status quo; that is, that DoD continue to rely on the General Schedule (GS) and Federal Wage System (FWS) classification and pay systems. Many commenters thought the proposed pay-for-performance system would lower employee morale, increase competition among employees, and undermine teamwork and cooperation. Some also questioned the ability of the Department to successfully implement the proposed system, or of DoD managers to establish and apply performance standards fairly and consistently to pay decisions. Other commenters thought a pay-for-performance system would have a chilling effect on the expression of dissenting opinions, especially those concerning fraud, waste, and abuse. Some commenters recommended that current employees be allowed to remain in the existing system or have the option to stay in the current system or convert to NSPS. Still others wanted a more gradual implementation with testing of the effectiveness of the new system on various populations first.

We have retained the system described in the proposed regulations. We believe Congress and the American people expect their public employees to be paid according to how well they perform, rather than how long they have been on the job. They also expect the Department to do everything it can to recruit and retain the most talented individuals it can find to carry out its critical mission. The GS and FWS pay systems do not provide the opportunity to appropriately reward top performers or pay them according to their true value in the labor market. Under the GS and FWS pay systems, performance is rewarded as an exception rather than the rule, and market is defined as ''one size fits all,'' with no distinction for differences in market pay based on occupation.

The GS and FWS pay systems are primarily longevity-based systems—that is, pay increases are linked primarily to the passage of time. While time in grade determines eligibility for a GS or FWS step increase, it is true that a finding that the employee is performing at an acceptable level of competence is also required. However, this minimal requirement is met by roughly 99 percent of all GS employees. Thus, at any given grade level, the vast majority of employees can expect to automatically receive base pay increases of up to 30 percent over time—in addition to the annual across-the-board pay increases—so long as their performance is ''acceptable.'' Even employees whose performance is unacceptable receive annual across-the-board pay increases that range from 3 to 5 percent, and special rates that are even higher. Over time, even less productive employees will progress steadily to the top of the GS and FWS pay ranges and may end up being paid significantly more than higher-performing employees with less time in grade. Such a system cannot be fairly characterized as providing performance-based pay.

The NSPS pay-for-performance system, by contrast, is designed to recognize and reward performance in two key ways. First, it establishes the fundamental principle that no employee may receive a base pay or local market supplement increase if his or her performance does not meet or exceed expectations. In contrast to the present pay systems, employees rated unacceptable will not get an annual adjustment. Second, the NSPS system provides for individual base pay increases based on an employee's performance, whether by demonstrating requisite competencies at the entry/developmental level or by meeting or exceeding performance expectations at the full performance level. In contrast to the present pay systems, under NSPS, an employee will progress through the pay range based on how well he or she performs.

This concept may be simply summarized: The higher the performance, the higher the pay. This, too, is a fundamental principle of the new system, and we choose the order of these words deliberately. This system does not assume that individuals are motivated by pay, but rather that we have an obligation as an employer to reward the highest performers with additional compensation—however they may be motivated to achieve excellence. The Department has a special responsibility in this regard. Thus, the system we have designed is not a ''performance-for-pay'' system, but a ''pay-for-performance'' system. Nevertheless, we believe it will inspire DoD employees to perform at their best. This is in contrast to the GS and FWS pay systems, where it is possible for a high-performing employee to be paid the same, or even less, than a lower performing co-worker.

As it designs and implements NSPS, the Department is taking the following steps to ensure that the performance management system functions properly:

- Training managers to provide candid and constructive feedback to help employees maximize their contribution and potential;
- Emphasizing the need for ongoing and meaningful dialogue between managers and employees;
- Use of a pay pool process to ensure that performance decisions are made in a careful, deliberative environment that uses a consistent approach to decisions regarding performance ratings and shares;
- Implementing a new competency-based performance management system that is intended to create a clear linkage between employee performance and the Department's strategic plan and core values;
- Increasing employee understanding and ownership of organizational goals and objectives;
- Adopting automation tools that facilitate ''best practices'' in the pay-for-performance environment;
- Reinforcing the use of team and organizational rewards; and

• Preserving non-cash rewards as tools to recognize performance.

The 50-plus-year-old GS pay system also is not sufficiently market-sensitive, potentially under-valuing the talents of the Department's most critical employees. Under the GS and FWS pay systems, all employees in a given geographic location receive the same annual pay adjustment without regard to their occupation or the level of duties and responsibilities they are expected to perform. This one-size-fits-all approach treats all occupations alike, across the board as well as in particular locations, regardless of market value. Thus, we inevitably end up underpaying employees in some occupations and overpaying others. Even within an occupation, the rigidities of the current pay systems sometimes force us to underpay employees at the entry/developmental grades, with recruiting difficulties and high attrition the result.

The new NSPS pay system is designed to be much more market-sensitive. First, it allows NSPS, after coordination with OPM, to define occupational career groups and levels of work within each career group that are tailored to the Department's missions and components. Second, it gives DoD considerable discretion, after coordination with OPM, to set and adjust the minimum and maximum rates of pay for each of those career groups or bands, based on national and local labor market factors and other conditions. Instead of ''one size fits all'' pay rates and adjustments, the system allows DoD to customize those adjustments and optimize valuable but limited resources. This kind of flexibility, which is lacking under the GS and FWS pay systems, will enable DoD to allocate payroll dollars to the occupations and locations where they are most needed to carry out the Department's mission.

The goals and principles of the new system are sound, and we have confidence that the Department has the capability to execute them effectively. Pay-for-performance systems like that proposed for DoD are not new. Pay banding has been around in the Federal Government since 1980, and the Federal Government has substantial experience in implementing performance-based pay systems (*e.g.*, in demonstration projects). DoD alone has tested and implemented 11 performance-based pay systems since 1980. Research shows that employee attitudes toward such systems change over time, as they gain experience with them. For example, employee support for the ''China Lake'' broadbanding/pay-for-performance demonstration project was only 29 percent before the project began, reached 51 percent by 1985, and was 69 percent by 1988. Employee support was 70 percent when Congress made the project permanent in 1994. Today, thousands of Federal employees already are covered by successful performance-based pay systems.

The system we have devised is also consistent with the findings and recommendations of NAPA in its May 2004 Report, ''Recommending Performance-Based Federal Pay.'' The basis for managing individual salary increases should be pay for performance. This recommendation has been a constant theme in discussions for more than two decades and the principle in every demonstration project that tested new pay policies. The evidence from the projects confirms that pay for performance can be successful in DoD. Nonetheless, the switch to a pay-for-performance system will be implemented via a spiral (multi-phase) approach resulting in application of the NSPS HR system, including the pay-for-performance system, to new segments of the DoD population at approximately 6-month intervals over a 2-year period. The phased intervals of implementation will provide opportunities to assess and adjust the system as each new group of employees is covered by the new system. For the most part, populations phased into NSPS will be grouped by organization in order to facilitate the change in organizational culture that will be essential to the success of NSPS and the improved organizational performance resulting from its implementation.

In summary, we believe the Department's pay-for-performance system is an imperative, essential to DoD's ability to attract, retain, and reward a workforce that is able to meet the high expectations set for it by the Department's senior leaders for the purpose of accomplishing the Department's mission—the defense of our nation.

Many commenters expressed concern that there will not be sufficient resources made available to fund pay pools at adequate levels. There were also many comments suggesting that pay pool money will be diverted from pay to mission requirements or to reward supervisors and managers, thereby leaving less for lower-graded employees.

Proper funding of pay pools is fundamental to the success of NSPS. DoD senior leadership recognized its importance in setting two Key Performance Parameters—''Credible and Trusted'' and ''Fiscally Sound.'' In addition, this issue was the subject of testimony by the NSPS Senior Executive to the Senate Armed Services Committee in April 2005. Secretary England was asked what assurances he could give that limited appropriations or other budget pressures would not result in pay pools too small to truly reward performance. He declared that the Department viewed this as a basic covenant with its employees and confirmed that action is being taken to protect pay pool funding.

The Department is implementing financial policies for NSPS. Protection of pay pool funding is being addressed in several different ways. First, the Department will mandate the minimum composition and expenditure of pay pool funds. Second, appropriate senior-level officials are required to certify that funds allocated to the performance-based pay pools have been used only for the purpose for which they were intended. Third, any exception to the minimum funding of the pay pool will be based on stringent criteria, along with higher-level approval. Fourth, mechanisms will be in place to monitor compliance.

In accordance with the enabling legislation, for fiscal years 2004 through 2008, the aggregate amount allocated for compensation of DoD civilian employees under NSPS, to the maximum extent practicable, will not be less than if they had not been converted to the NSPS. This takes into account potential step increases and promotions employees would have received if not converted to NSPS. In addition, § 9901.313(b) provides that for fiscal years 2009 and beyond, DoD will develop a formula that ensures, to the maximum extent possible, that employees are not disadvantaged in the overall amount of pay available, in the aggregate, as a result of conversion to NSPS, while providing flexibility to accommodate changes in the function of the organization, changes in the mix of employees performing those functions, and other changed circumstances that may affect pay levels.

c. Adverse Actions and Appeals

In authorizing the creation of a new human resources system for the Department, Congress specifically required that employees be afforded the protections of due process. Recognizing the critical nature of the Department's mission, Congress also stated in 5 U.S.C. 9902(h)(2) that the new appeals process may ''establish legal standards and procedures for personnel actions, including standards for applicable relief, to be taken on the basis of employee misconduct, or performance that fails to meet expectations.''

The proposed regulations included a number of changes to adverse actions and appeals procedures. Consistent with the enabling legislation, these changes were intended to simplify and streamline those procedures and provide for greater individual accountability, all without compromising guaranteed due process or protections against whistleblower reprisal or discrimination. Greater accountability is particularly critical to the Department. By its very nature, the Department's national security mission requires an exceptionally high level of workplace order and discipline. The fact that DoD employees provide critical support to the military mission of defending the country means that they, and the Department have a special responsibility to the public.

With that in mind, the proposed regulations provided for shorter notice for adverse actions, an accelerated appeals adjudication process using MSPB AJs, a preponderance of the evidence burden of proof to sustain the Department's adverse actions, whether based on conduct or performance, or both, and specifically limited the mitigation of agency selected penalties by MSPB AJs and private arbitrators. The proposed regulations also required that arbitration decisions on adverse actions be reviewable by the Department and the full MSPB prior to review by the Federal Circuit Court of Appeals. The proposed regulations also gave the Secretary authority to establish a number of mandatory removal offenses (MRO)—that is, offenses that have such a direct and substantial impact on national security that they must carry a mandatory removal penalty. While the enabling legislation provides authority to establish an internal appeals process using adjudicators other than MSPB AJs, the Secretary and the Director decided that with the changes outlined above, DoD could achieve the objectives of the enabling legislation using MSPB AJs for initial review of employee adverse action appeals. Ultimately, the enabling legislation provides for full MSPB review of any DoD final appeals decision as well as for judicial review.

Commenters, including labor organizations participating in the meet-and-confer process, generally expressed concern that these changes, separately and together, would vitiate the due process rights of DoD employees. They argued that the changes would substantially diminish the authority of third parties such as MSPB and arbitrators to fully and fairly review and adjudicate adverse actions. Commenters, as well as some members of Congress, expressed particular concern, about the proposal to permit the Department to review arbitrator and MSPB AJ decisions on adverse actions. Commenters expressed skepticism that the stringent standards established for this review would adequately protect due process of employees. Commenters also expressed concern about the proposal to limit the ability to mitigate penalties unless the penalty was ''wholly without justification.'' Commenters generally supported the proposal to adopt a ''preponderance of evidence'' standard of proof, although a few commenters were opposed to this proposal.

These comments express a fundamental misconception of the requirements of due process as established by the United States Supreme Court. For example, in accordance with Supreme Court decisions, due process requires that before an employee who has a property interest in a job is removed, he or she is entitled to notice, an opportunity to reply, a decision, and a post-decision review. The final regulations preserve these due process rights for covered employees and afford even greater protection than the U.S. Constitution requires. Recognizing that many of these comments were erroneously characterized as due process issues, we nevertheless considered their merits.

DoD and OPM have decided that the final regulations will continue to provide for a shorter, 15-day minimum advance notice to an employee of a proposed adverse action (compared to a 30-day notice under current law). We have also retained the provision giving employees a minimum of 10 days to respond to the charges specified in the notice of adverse actions. Some commenters suggested that the 10-day period was not long enough, but this notice is actually longer than the 7-day minimum reply period that is provided under current law. This reply period runs concurrently with the notice period, which is also consistent with current law. Employees continue to have a right to be heard before a proposed adverse action is taken against them. This change protects that right while still providing for a more streamlined process. Since these are minimum time periods, local management may extend these time limits on a case-by-case basis if necessary.

We are persuaded by the concerns expressed by commenters, as well as labor organizations during the meet-and-confer process, that the enabling legislation establishes the standard by which the full MSPB may mitigate penalties. Specifically, the proposed regulations precluded mitigation except where a determination is made that the penalty is so disproportionate to the basis for the action as to be wholly without justification. Since the enabling legislation specifically provides the criteria for full MSPB review of NSPS appeals decisions, the Secretary and Director agree that it is unnecessary to require the full Board to apply the ''wholly without justification'' standard. The criteria for full MSPB review as provided in the enabling legislation have been added to these regulations. Furthermore, the Secretary and Director agree to revise the ''wholly without justification'' standard for MSPB AJs that are used as part of the Department's appeals process as well as arbitrators. The standard has been revised to preclude mitigation except when the action is ''totally unwarranted in light of all pertinent circumstances.'' This standard is similar to that recognized by the Federal courts and is intended to limit mitigation of penalties by providing deference to an agency's penalty determination. The Department has statutory authority to establish new legal standards. In this case, the Department is electing to adopt a legal standard that meets the need of the Department by ensuring deference is provided to the Department's penalty determinations along with the requirement that AJs give consideration to the Department's national security mission.

Under the final regulations, MSPB AJs (as well as arbitrators) will also be able to mitigate penalties in adverse action cases, but only under limited circumstances. We continue to believe that, because the Department bears full accountability for national security, it is in the best position to determine the penalty for poor performance and/or misconduct, subject to a more limited review than exists now under chapter 75 of title 5, U.S. Code. Thus, its judgment in regard to penalty should be given deference. This limited standard for mitigation of penalties selected by DoD is intended to explicitly restrict the authority of MSPB AJs and arbitrators to modify penalties to those situations where the penalty is simply not warranted. MSPB AJs and arbitrators may not modify the penalty imposed by the Department unless such penalty is totally unwarranted in light of all pertinent circumstances. Consistent with the intent that deference be given to agency selected penalties, the regulations also provide that when a penalty is mitigated, the maximum justifiable penalty must be applied. In determining the maximum justifiable

penalty, MSPB AJs and arbitrators will use the applicable agency table of penalties or other internal guidance.

Commenters and labor organizations expressed strong concerns over DoD reviewing MSPB AJ decisions. These concerns ranged from whether the Department had legal authority to conduct this review to whether this assists in achieving the Department's goal of streamlining the appeals process. Some expressed concerns that this would not be a truly independent appeals process as a result. We recognize these concerns, but believe that the process provides for appropriate review and safeguards. The enabling legislation authorizes an appeals process resulting in a final Department decision that is subject to full MSPB review. Consistent with this authority, we have established an independent appeals process using existing and familiar resources, MSPB AJs, to adjudicate employee appeals of DoD adverse actions. These AJs would issue initial decisions that would lead to a final Department decision subject to full MSPB review. The decision to utilize the MSPB AJ corps, rather than establishing a new corps of AJs, is purposeful. We are mindful of the need to conserve resources and recognize the value these AJs' independence brings to the process. Nevertheless, to ensure that the Department receives proper deference to its critical mission requirements, the Department will retain the opportunity to review and modify, under criteria prescribed in these regulations, those initial AJ decisions before they become final Department decisions. In response to concerns raised by the unions during the meet-and-confer process, this review will occur at the DoD level. This highlights that the highest levels of the Department wish to ensure that this process is applied fairly and consistently across the Department. Also, in order to ensure timely decisions by the Department when taking action on an AJ or arbitrator decision, time limits for taking action will be established in implementing issuances. Ultimately, any decision of the Department is subject to review by the full MSPB and the Court of Appeals for the Federal Circuit. We believe this process affords employees full and fair opportunity for redress, as well as adjudicative independence, and deference to DoD's critical mission needs, consistent with the NSPS statutory authority.

Finally, many commenters and labor organizations participating in the meet-and-confer process expressed concerns about the organization of the appellate procedures, finding them difficult to follow. We are persuaded by their concerns and have reorganized the appellate procedures in a user-friendly format.

With the changes outlined above, we believe we have addressed and resolved the concerns raised by commenters regarding adverse actions and appeals. Due process is preserved under the final regulations. Thus, the adverse actions and appeals procedures set forth in these regulations are ''fair, efficient, and expeditious,'' consistent with congressional direction.

d. Mandatory Removal Offenses

The proposed regulations authorized the Secretary to identify offenses that, because they have a direct and substantial adverse impact on the Department's national security mission, warrant a mandatory penalty of removal from the Federal service. Only the Secretary could mitigate the removal of an employee determined to have committed such a mandatory removal offense (MRO). Employees alleged to have committed these offenses would have the right to advance notice, an opportunity to respond, and a written decision. They would also be entitled to appeal that decision to the independent MSPB AJs, who could reverse the action but could not mitigate the removal penalty. Decisions of the MSPB AJs are subject to review by DoD as well as the full MSPB.

Commenters and unions expressed a number of objections to the concept of MROs. Since no examples of potential MROs were provided in the proposed regulations, they feared that removal could be too harsh a penalty as for yet unspecified offenses. They also were concerned that employees would not be given full and complete notice of such offenses prior to their application.

As proposed, an MRO should have a direct and substantial adverse impact on the Department's national security mission. Accordingly, we have decided to retain MROs. However, in response to comments, the Secretary and the Director understand the concern over the lack of specificity with regard to MROs. During the meet-and-confer process, participating labor organizations expressed a similar concern, but we believe we were able to satisfactorily address most of their objections about lack of specificity by sharing with them potential mandatory removal offenses.

In addition to those MROs discussed during the meet-and-confer process, an illustrative list of potential MROs follows:

- Purchasing, using, or transporting weapons or materials for the purpose of committing, attempting to commit, or aiding and abetting terrorism.
- Committing, attempting to commit, or aiding and abetting an act of sabotage against the Department of Defense that resulted or could have resulted in loss of life, significant financial loss or adverse impact on military readiness.
- Soliciting or intentionally accepting a bribe or other unauthorized personal benefit in return for an act that compromises or could compromise national security.
- Employees involved in the Personnel Reliability Program failing to safeguard the assets for which they are directly responsible and such failure results in loss, theft, sabotage, unauthorized use, destruction, detonation, or damage.
- Intentionally engaging in activities that compromise or could compromise the information or financial infrastructure, including major procurement fraud, of the Department of Defense, when the employee knew or reasonably should have known of the compromise or potential compromise.

There is no question that employees must be made aware of the final list of MROs approved by the Secretary. Both the Secretary and the Director believe that this is a basic issue of fairness and a tenet of an organizational culture that establishes clear accountability. That is why the proposed regulations provided that MROs will be identified to employees in advance, as part of implementing issuances, and made known to all employees upon identification. During the meet-and-confer process, participating labor organizations were especially concerned about this issue. We agree that these offenses should not be a surprise to anyone, and have retained these provisions in the final regulations but have also added a requirement that they be publicized via notice in the **Federal Register**. The Secretary also intends to consult with the Department of Justice in preparing the list of offenses for publication.

With these changes, the final regulations provide for the independence demanded by commenters while assuring DoD's ability to remove employees who engage in offenses that have direct and substantial impact on the Department's national security mission. The Secretary is accountable to the President and the American people for safeguarding national security. No other agency or department bears this burden. These regulations ensure that the Secretary's authority aligns with that responsibility.

e. Labor Relations

Without exception, employee representatives objected to the proposed labor relations regulations, both in their comments and during the meet-and-confer process. Employee representatives argued that Congress expressly specified only two modifications to chapter 71—bargaining above the level of recognition and independent third party review of decisions. We disagree. In enacting chapter 99, Congress expressly recognized the need for the Department to design a labor relations system that both addresses the unique role that the Department's civilian workforce plays in supporting the Department's national security mission and allows for a collaborative issue-based approach to labor management relations.

Moreover, Congress specifically authorized the Secretary, together with the Director, to establish and adjust this labor relations system in support of the overall HR management system notwithstanding the provisions of the current system as set forth in chapter 71. Thus, the Secretary and the Director have modified chapter 71 ''to address the unique role that the Department's civilian workforce plays in supporting the Department's national security mission.'' (5 U.S.C. 9902(m)) In taking the steps necessary to establish and adjust this labor relations system, Congress further recognized that the provisions of this system will supersede existing collective bargaining agreements covering Department employees and negotiated pursuant to the provisions of chapter 71. Finally, Congress indicated that the authority of the Secretary and Director to devise and adjust the Department's labor relations system would expire in 2009 absent further action by Congress (5 U.S.C. 9902(d)(2) and 5 U.S.C. 9902(m)(1), (2), (8), and (9)).

f. Management Rights/Scope and Duty To Bargain

The ability to act quickly is central to the Department's national security mission—not just during emergencies but, more importantly, in order to prepare for or prevent emergencies. The ability to act quickly is necessary even in meeting day-to-day operational demands. The Department must be able to assign employees and to introduce the latest security technologies without delay. This principle was crucial in the formulation of the enabling legislation and in the congressional debate that followed its introduction. Congress clearly recognized the Department's need to operate under a new labor relations system that would provide the flexibility necessary to respond to a variety of vital operational challenges and carry out its national security mission.

To achieve this objective, the proposed regulations revised, among other things, the management rights and duty to bargain provisions found in 5 U.S.C. chapter 71. We expanded the list of management rights that are excluded from bargaining, including the numbers, types, and grades of employees or positions assigned to any organizational subdivision, work project, or tour of duty; and the technology, methods, and means of performing work—rights that deal directly with the Department's national security operations. In addition, we excluded from bargaining the procedures that the Department would follow in exercising these expanded operational management rights. We also proposed to allow the Department to take action in any of these areas without advance notice to labor organizations and without pre-implementation bargaining.

Without exception, labor organizations objected to the proposed regulations, both in their comments and during the meet-and-confer process, arguing that altering the scope of bargaining in any way is contrary to the enabling legislation. They also claimed that these changes were unnecessary because current law already provided the Department with sufficient flexibility to deal with emergencies. They also took strong exception to the provisions in the proposed regulations that would allow issuances to supersede conflicting provisions of any collective bargaining agreements and limit bargaining to only those matters that are not inconsistent with the issuances. Labor organizations did acknowledge the Department's need to take certain actions without pre-implementation bargaining, and during the meet-and-confer process they proposed a process for accelerated bargaining within established time limits and the use of binding arbitration to resolve all bargaining disputes. Additionally, they suggested that the term ''emergency'' be interpreted as including ''exigencies requiring action reasonably necessary to carry out the Department's national security mission before collective bargaining concerning the action can be completed,'' and that in such exigencies the Department will afford the opportunity to bargain when circumstances reasonably allow. Their proposals would have allowed the Department to temporarily suspend provisions of collective bargaining agreements in situations where there is a direct connection between the exigency and the Department's national security mission. Even under such mission critical and exigent conditions, they insisted that post implementation agreements would have prospective effect only if the emergency was unforeseen. If the national security exigency were foreseen, then any remedy for Department action that was contrary to a contractual provision would have retroactive effect unless the retroactive effect would ''unduly disrupt Department operations reasonably necessary to carry out the Department's national security mission.''

We recognize the good faith effort made by these labor organizations to meet the Department's operational needs. However, their proposals were lacking in several respects. We have, therefore, retained the management rights/scope of bargaining provisions in the proposed regulations with some modifications.

With respect to procedures, the proposals offered by the labor organizations do not go far enough. They would still require the Department to bargain, before acting, over the procedures it would follow in exercising its management rights, including those that deal directly with its operations. Once negotiated, those procedures can and do place significant constraints on critical actions such as the assignment of work, the deployment of personnel, and the staffing of tours of duty. These procedures are negotiable under 5 U.S.C. chapter 71. Labor organizations would have the Department continue that obligation, but under time limits and with an expanded interpretation of the chapter 71 provisions regarding emergencies that would allow management to bargain post implementation in certain limited circumstances.

However, in today's operational environment, the exception has become the rule. Department managers, supervisors, and employees are critical to the Department's mission to defend our national security. The Department must be able to rely on the judgment and ability of managers and supervisors to make day-to-day decisions—even if this means deviating from established or negotiated procedures. Moreover, the Department's managers and supervisors must be able to make split-second decisions to deal with operational realities free of procedural constraints.

With respect to post-implementation bargaining, the proposals offered by labor organizations are similarly lacking. Although they would allow management to implement without bargaining in advance when faced with

an emergency, they would still require immediate post-implementation negotiations and third-party impasse resolution over such matters. However, the reality of DoD's operational environment today is that change is constant, and as a consequence, so too would be post-implementation bargaining, with the prospect of prolonged third-party impasse resolution. These negotiations would be required even in cases where the change was short-lived and/or where its impact was insignificant, insubstantial, or transient. The demand on DoD's frontline managers, supervisors and employees to engage in constant post-implementation negotiations would divert them from accomplishing the mission. This is unacceptable and inconsistent with the authority Congress granted to the Department in the enabling legislation.

Further, under 5 U.S.C. chapter 71, interpretations of negotiated appropriate arrangements tend to assume that those agreements have anticipated future changes, but today's operational environment belies that assumption. Changes necessitated by operational demands are recurring and variable. Our frontline managers and supervisors must not be bound by agreements presupposing circumstances that are assumed to be constant, when they must face current and future exigencies.

Nevertheless, in recognition of the concerns articulated by commenters during the public comment period and during the meet-and-confer process by participating labor organizations and as a result of the June 16, 2005, meeting of the United DoD Workers Coalition, DoD's NSPS Senior Executive, and OPM's Acting Director, the Secretary and the Director decided that the proposed regulations would be revised in a number of ways.

First, we have modified the definition of ''issuances'' to make clear the distinction between an ''implementing issuance'' and an ''issuance''. An ''implementing issuance'' is a document issued to carry out a policy or procedure implementing NSPS (but does not include internal operating guides, manuals, or handbooks that do not change employees' conditions of employment), while an ''issuance'' is a document to carry out a non-NSPS policy or procedure of the Department. We have also clarified that while an implementing issuance immediately supersedes those provisions of collective bargaining agreements that are inconsistent with the implementing issuance, an issuance does not supersede a conflicting provision of a collective bargaining agreement during the term of that agreement. This ensures the viability of the collective bargaining process under NSPS. When a provision of a collective bargaining agreement conflicts with an issuance, the collective bargaining provision remains in effect until the expiration or renegotiation of the agreement, at which time the parties will have to bring the conflicting provision into conformance with the issuance. This is comparable to the process that has long been followed regarding Governmentwide regulations. Specifically, issuances will be subject to national consultation with those labor organizations holding national consultation rights. Moreover, following consideration of comments and recommendations received through the national consultation process, issuances are subject to collective bargaining to the extent proposals are not inconsistent with the issuance and are otherwise negotiable under § 9901.910 and § 9901.917.

More importantly, and in response to concerns that managers may issue implementing issuances and issuances for the sole purpose of invalidating particular provisions of a collective bargaining agreement that they do not like, we have also modified the regulations to specify that implementing issuances, that is, those that implement NSPS and supersede conflicting provisions of existing collective bargaining agreements, may only be issued by the Secretary, Deputy Secretary, Principal Staff Assistants, or Secretaries of the Military Departments. We have limited ''Principal Staff Assistants'' to senior officials in the Office of the Secretary of Defense who report directly to the Secretary and Deputy Secretary of Defense. We also have added a new subparagraph, § 9901.905(c) to make clear that any provision of a collective bargaining agreement that is inconsistent with issuances that do not implement NSPS will remain in effect until the expiration, renewal, or extension of the agreement, whichever occurs first.

Finally, we have modified the regulations to permit bargaining, in the sole, exclusive, unreviewable discretion of the Secretary, over the procedures that would be followed in exercising the expanded operational management rights. We have also modified the regulations to permit bargaining, at the election of the Secretary, over appropriate arrangements on the routine matters related to the expanded operational management rights. The Secretary may authorize such bargaining to advance the Department's mission accomplishment or promote organizational effectiveness. Mid-term agreements on appropriate arrangements and procedures for (a)(1) and (a)(2) management rights are not precedential or binding on subsequent acts, or retroactively applied, except at the Secretary's sole, exclusive, and unreviewable discretion. Procedures and appropriate arrangements in term agreements are binding, except that nothing will delay or prevent the Secretary from exercising his or her authority under subpart I. For example, the Secretary may authorize deviation from such agreements when it is necessary to carry out the Department's mission. This authority builds on the authority that exists today when an emergency occurs, as that term is applied under chapter 71, to address the unique nature of the Department's mission and the operational demands it must face.

Taken together, we believe these revisions meet the Department's mission needs, are consistent with the enabling legislation's intent to preserve collective bargaining rights as provided for in 5 U.S.C. chapter 99, and assure employees that issuances will not be issued for the improper purpose of eliminating local bargaining. While commenters have argued that any alteration of the scope of bargaining violates the enabling legislation, this interpretation is inconsistent with the express authority Congress has given the Secretary and the Director to establish and from time to time adjust the labor relations system for the Department to address the unique role that the Department's civilian workforce plays in supporting the Department's national security mission. These regulations fulfill that statutory requirement while providing employees with the rights envisioned by Congress.

g. Independence of the National Security Labor Relations Board

The National Security Labor Relations Board (NSLRB) described in the NSPS regulations is intended to act as one element of independent third-party review of collective bargaining disputes as provided for in 5 U.S.C. 9902(m)(6). Commenters, including labor organizations participating in the meet-and-confer process, objected to the creation of the NSLRB because they believe that an internal DoD review board would not be independent from management influence, unlike the Federal Labor Relations Authority (FLRA). Commenters suggested that any board whose membership would be appointed and removed by the Secretary could not reasonably be expected to remain impartial. They also suggested that the primary reason for taking

jurisdiction of these matters away from the independent and impartial FLRA is to guarantee that DoD management can influence the NSLRB's decisions, giving them an unfair advantage over employee representatives.

We have decided to retain the NSLRB. Employing the NSLRB to adjudicate labor disputes in place of the FLRA ensures timely and efficient case management by a body cognizant of the important and unique nature of the Department's mission. We believe that the final regulations have adequately balanced the Department's interest in timeliness and mission recognition with employees' desire to have an impartial dispute adjudicator. The regulations establish NSLRB membership criteria that require candidates to exhibit integrity and impartiality in addition to extensive knowledge of labor laws, DoD's mission, or both. Although the Secretary has authority to remove NSLRB members before the expiration of their terms, that authority is limited to removal for inefficiency, neglect of duty or malfeasance in office, which is a standard similar to that for removing members of the FLRA. In addition, since the standard is established in these jointly prescribed regulations, it may not be changed unilaterally by the Secretary. Finally, we stress that the NSLRB decisions are subject to review by the FLRA, which acts as another element of independent third-party review. The FLRA decisions, including those reviewing decisions of the NSLRB, remain subject to judicial review as they are under chapter 71. These regulations establish that the NSLRB will operate independent of the chain of supervision as does any agency administrative judge or administrative review board whose decisions can be appealed to a higher authority.

Multiple commenters, including labor organizations participating in the meet-and-confer process, recommended that the labor organizations be given the opportunity to participate in the NSLRB nomination process. We agree and have included in the final regulations an explicit requirement that the Secretary consider labor organization nominations. Whereas the proposed regulations did not provide a role for labor organizations in the nomination process, the final regulations provide that the Secretary will consider labor organization nominations in selecting the two non-chair members of the NSLRB. This assures labor organizations a voice in the NSLRB selection process.

While we have not adopted all suggestions related to the NSLRB, we believe the final regulations ensure that NSLRB members will discharge their duties in a fair and impartial manner by (1) including employee representatives in the process for selecting such members; (2) requiring that individuals appointed as members have integrity, impartiality, and subject matter expertise; (3) limiting the grounds on which the Secretary can remove NSLRB members; and (4) providing for FLRA review of NSLRB decisions and, as prescribed in chapter 71, judicial review of FLRA decisions.

Response to Specific Comments and Detailed Explanation of Regulations

Subpart A—General Provisions

Section 9901.101—Purpose

Section 9901.101 explains the overall purpose of the regulations in 5 CFR part 9901, which is to implement a new human resources management system and a new labor relations system, as authorized by 5 U.S.C. 9902. The section states various guiding principles and key operational characteristics and requirements. We have added a reference in § 9901.101(a) to the labor relations system, which is established under 5 U.S.C. 9902(m), since this is a separate and distinct authority. (See additional discussion regarding this distinction in the analysis of comments regarding § 9901.102.)

Commenters questioned the authority to waive or modify statutes through these regulations. We are modifying § 9901.101(a) to clarify that 5 U.S.C. 9902 provides authority for these regulations to waive or modify certain statutory provisions.

A commenter recommended that the regulations restate the statutory merit principles instead of just referencing them as a guiding principle. We do not believe such a restatement is necessary; however, we have added a statutory citation—5 U.S.C. 2301—in § 9901.101(b)(1).

Commenters expressed concern regarding the key operational characteristic ''Agile and Responsive Workforce and Management,'' which was further described as ''workforce can be easily sized, shaped, and deployed to meet changing mission requirements.'' In particular, some objected to viewing civilian employees as deployable in the same manner as military personnel. While DoD has always had and will continue to have the right to assign employees to serve in geographic locations based on mission requirements, the word ''deploy'' in this section is being used in a broader context and was intended to encompass the strategic organization of work based on employee skills and competencies and mission needs. In particular, we believe the authority in subpart B to classify work into broader career groups supports this objective.

Section 9901.102—Eligibility and Coverage

Section 9901.102 sets forth general rules regarding employee eligibility and coverage under the various subparts of part 9901. Categories of eligible employees become covered only when the Secretary affirmatively approves coverage as of a specific effective date.

Commenters indicated that the Secretary's discretionary authority in coverage matters is too broad. We believe it is essential that the Secretary be given such discretion. The authority to establish systems would be meaningless unless there is corresponding authority to place eligible employees under the system. The Secretary needs flexibility to phase in coverage in an orderly way, while retaining authority to change effective dates as needed, based on changing conditions or mission requirements.

Commenters stated that the authority in § 9901.102(b)(1) to establish an immediate effective date for subpart I (dealing with labor relations) conflicts with 5 U.S.C. 9902(l). Section 9902(l) provides that the Secretary may apply the ''National Security Personnel System'' only if (1) the affected organizational or functional unit has no more than 300,000 employees or (2) the Secretary determines ''in accordance with subsection (a)'' that the Department has in place a performance management system that meets the criteria in 5 U.S.C. 9902(b). The term ''National Security Personnel System'' is defined in 5 U.S.C. 9902(a) to be the ''human resources management system,'' which is established under the authority of subsection (a). Section 9902(b) provides requirements for a system established ''under subsection (a).'' Under 5 U.S.C. 9902(b)(3)(D) and (d), the human resources management system established under subsection (a) does not reach to the labor relations system established under 5 U.S.C. chapter 71. Instead, 5 U.S.C. 9902(m) provides a totally separate authority to establish and adjust a ''labor relations system.'' We believe it is clear that the limitations in 5 U.S.C. 9902(l) apply only to the human resources management system established under 5 U.S.C. 9902(a).

Commenters raised questions about the coverage of employees in certain DoD laboratories who are covered by a demonstration project or an alternative system. Section 9902(c) of title 5, U.S. Code, states that the National Security Personnel System will not apply to

defense laboratories in organizations listed in Section 9902(c)(2) before October 1, 2008, and will apply after that date only if the Secretary determines that greater flexibilities are available. Consistent with the explanation in the preceding paragraph, the reference to the ''National Security Personnel System'' in 5 U.S.C. 9902(c) refers to the human resources management system which is defined as the National Security Personnel System in Section 9902(a). Thus, the restrictions in 5 U.S.C. 9902(c) do not apply to the coverage of these laboratory employees under the labor relations system established under 5 U.S.C. 9902(m), and these employees may be covered by subpart I (dealing with labor relations) before October 1, 2008.

Commenters objected to the possible coverage of certain civilian mariners who are currently covered by a pay system established under 5 U.S.C. 5348 and are also covered by 5 U.S.C. chapter 71. These employees will be covered by subpart I (dealing with labor relations). However, the Secretary has determined that they will not be covered by the human resources system, including the adverse actions and appeals provisions. Other commenters asked about certain Army Corps of Engineers employees under Public Law 97–257. U.S. Army Corps of Engineers employees paid from Corps of Engineers Special Power Rate Schedules will be covered by subpart I (dealing with labor relations). The Secretary has determined that they will not be covered by the human resources system, including the adverse actions and appeals provisions.

Commenters asked whether a category of employees could be covered by some, but not all, provisions of subparts B through H. In particular, commenters noted that National Guard Technicians were eligible for coverage but were subject to certain provisions outside title 5—*e.g.*, qualification requirements established under title 32, instead of qualification standards established under 5 U.S.C. chapter 51. Since 5 U.S.C. 9902 does not provide authority to modify or waive statutory provisions outside of certain specified chapters in title 5, any such provisions would continue in effect. The Secretary may extend coverage to eligible employees under subparts B through H to the extent those provisions are not in conflict with other statutory requirements.

Commenters proposed that certain occupations be excluded from coverage—*e.g.*, attorneys or law enforcement officers—because of the nature of their work. We disagree. We believe the flexible systems we are authorizing can be applied successfully to all occupational categories.

Commenters raised questions regarding the purpose of § 9901.102(f). Paragraph (f) is intended to allow the Secretary to extend NSPS coverage to employees who are currently covered by systems established administratively under authorities outside of title 5, but only when those authorities give DoD the discretion to cover those employees under administratively determined systems or to leave them in the title 5 systems that would otherwise apply. For example, if DoD has discretionary statutory authority to cover a category of employees under an administratively determined classification and pay system instead of the General Schedule, such employees remain potentially eligible for General Schedule coverage and accordingly would also be eligible for NSPS coverage. Commenters questioned whether paragraph (f) could be used to cover educators employed by the DoD Education Activity in an NSPS pay system. Since the pay system for those educators employed overseas (Department of Defense Dependents Schools) is established under nondiscretionary statutory provisions in title 20, they are not eligible for coverage under an NSPS pay system. However, the pay system for those educators employed in the Continental United States (Defense Domestic Elementary and Secondary Schools) is established under discretionary provisions in title 10. Therefore, they are eligible for coverage under an NSPS pay system.

Commenters proposed that current employees (or at least current employees meeting certain age and service requirements) be ''grandfathered'' and left in existing title 5 systems instead of being covered by NSPS, unless they elect otherwise. This proposal is not practicable from an administrative viewpoint and is contrary to the objectives behind the enabling legislation. We believe the flexibilities provided under the proposed NSPS will yield significant benefits to the Government and will also benefit employees based on their performance. It is therefore not acceptable to delay full application of NSPS.

Commenters questioned why members of the Senior Executive Service (SES) are not covered by NSPS—specifically, the classification, pay, and performance provisions in subparts B through D. In fact, SES members are eligible for coverage under those NSPS provisions, subject to the conditions in § 9901.102(d). (See coverage provisions in §§ 9901.202(b)(4), 9901.302(b)(4), and 9901.402(b)(1).) We note that the SES pay and performance provisions in title 5 are already designed to be performance-sensitive. Thus, DoD does not plan to cover SES members in its initial implementation spirals. DoD may determine at a later date whether coverage under NSPS pay and performance provisions is necessary given the title 5 authorities that already apply to SES members.

In light of the numerous comments regarding the coverage eligibility of specific categories of DoD employees under the various subparts of these regulations, we have prepared the following summary chart showing various categories of employees that are eligible for coverage under the NSPS systems. This chart is not intended to be comprehensive or authoritative, but covers the major categories of employees in DoD outside of the General Schedule. In the chart, categories of employees that are identified as eligible for coverage under a particular subpart are annotated with ''Yes,'' and those that are identified as ineligible for coverage are annotated with ''No.'' The chart and its footnotes must be read together for full information on coverage eligibility. Actual coverage is subject to applicable law and approval by the Secretary under § 9901.102(b).

SUMMARY OF NON-GENERAL SCHEDULE COVERAGE ELIGIBILITY UNDER 5 CFR PART 9901

Category	Eligible for human resources system/ appeals process (subparts B-H)	Eligible for labor relations system (subpart I)
Air and Army Reserve Technicians	Yes	Yes.
Army and Air National Guard technicians (dual status) under 32 U.S.C. 709	Yes [1]	Yes.[2]

SUMMARY OF NON-GENERAL SCHEDULE COVERAGE ELIGIBILITY UNDER 5 CFR PART 9901—Continued

Category	Eligible for human resources system/ appeals process (subparts B-H)	Eligible for labor relations system (subpart I)
Army and Air National Guard technicians (non dual status) under 32 U.S.C. 709	Yes [1]	Yes.[2]
Hydropower Corps of Engineers Special Power Rate Schedules (WB pay plan)	No	Yes.
Navy Civil Service Mariner (WM pay plan)	No	Yes.
Overseas Teachers (DoDDS)	No	Yes.
Pentagon Force Protection Agency (title 5 and title 10 employees)	Yes [3]	Yes.
Federal Wage System (WA, WD, WG, WJ, WK, WL, WN, WO, WS, WT, WY, XF, XG, XH pay plans)	Yes	Yes.
Nonappropriated Fund	Yes [4]	Yes.
Domestic Teachers (DDESS)	Yes [4]	Yes.
Defense Laboratories in Organizations listed in 5 U.S.C. 9902(c)	No [5]	Yes.
Armed Services Board of Contract Appeals	No for Board members;. Yes for other employees.	No for Board members; Yes for other employees.
Court of Appeals for the Armed Forces	No for Judges and attorneys in chambers; Yes for other employees [6].	No for Judges and attorneys in chambers; Yes for other employees.[6]
Consultants and Experts (10 U.S.C. 129b)	No	No.
DARPA, scientists and engineers	No	No.
DCIPS (including DISES)	No	No.
Executive Schedule	No	No.
Faculty at DoD Educational Institutions: Air University, Air Force Institute of Technology, Army War College/Command & General Staff College, Defense Acquisition University, National Defense University, Defense Language Institute, George C. Marshall Center, Asia-Pacific Center for Security Studies, Western Hemisphere Institute for Security Cooperation, U.S. Naval Postgraduate School, Naval War College/U.S. Marine Corps University, USAF Academy, U.S. Naval Academy, U.S. Military Academy.	Yes [4]	Yes.
Faculty and staff at USUHS	No	No.
Foreign Nationals (Direct Hire)	No	No.
Schedule C	Yes	No.
SES	Yes	No.
Senior Level (SL/ST)	Yes	Yes.
DoD Office of the Inspector General	Yes, unless appointed under authority of the Inspector General Act of 1978 (5 U.S.C. App. § 6)[7].	No.

[1] Subject to limitations pursuant to 32 U.S.C. 709.
[2] But excluded from national level bargaining under 5 U.S.C. 9902(g).
[3] Title 10 employees under title 10 discretionary authority and subject to 10 U.S.C. 2674.
[4] Under title 10 discretionary authority.
[5] Until 2008, excluded from HR system and appeals process pursuant to 5 U.S.C. 9902(c).
[6] Pursuant to 10 U.S.C. chapter 47, subchapter XII.
[7] Currently there are no appointees under that authority.

Section 9901.103—Definitions

Section 9901.103 provides definitions of terms used in more than one subpart. Commenters expressed concerns about some definitions.

Commenters requested greater clarity with respect to the use of ''implementing issuances.'' Accordingly, we are revising the definition of ''implementing issuances'' to make clear that such documents can be issued by only certain high-level DoD officials (despite the Secretary's broad delegation authority), including those formally designated as acting in those high-level positions. We have also clarified that implementing issuances do not include internal operating guides, handbooks, or manuals that do not change conditions of employment. This is consistent with current practice. We have also added a definition of ''Military Department.''

To address general comments regarding the need for greater specificity where possible, we have added definitions of the terms ''initial probationary period'' and ''in-service probationary period.'' These terms are used in subpart E (Staffing and Employment) and subpart F (Workforce Shaping). In addition, we clarified the definition of ''NSPS'' to more closely track the language in the statute. ''NSPS'' means the human resources management system established under 5 U.S.C. 9902(a). It does not include the labor relations system established under 5 U.S.C. 9902(m). We do, however, use ''NSPS'' in the supplementary information and in public statements as a shorthand reference to describe both the HR and the labor relations systems. We also note that chapter 99 is entitled the National Security Personnel System.

Commenters expressed concern about the definition of ''performance.'' In particular, commenters objected to the

use of the terms ''behavior,'' ''demeanor,'' ''attitude,'' and ''manner of performance'' in defining performance. We note that these terms are used in a context that makes clear that we are dealing with observable behaviors that affect the accomplishment of assignments, responsibilities, and organizational goals. We believe performance assessments would not be complete without considering employees' behaviors in carrying out assigned work. For example, customer service is generally a paramount organizational objective. Thus, the manner in which employees treat customers is an important aspect of overall performance. Employee behaviors can be objectively observed and evaluated against established performance expectations. Some commenters suggested that assessments of manner of performance would open the door to abuse, cronyism, punishment for criticism of management, or retaliation against whistleblowers. We disagree. Under NSPS, employees are still protected against prohibited personnel practices and will have the same whistleblower rights they have always had. We note that managers will be held accountable for how they manage this process.

A commenter questioned whether the definition of ''promotion'' allows management to add higher-level duties without providing pay increases. It appears that this comment is primarily directed at the new classification authority under subpart B that would allow DoD to reduce the number of grade level distinctions by using bands to describe levels of work. Each band will encompass a single broad level of work that may encompass a range of duties previously performed at different grade levels. Promotion is movement to a higher level of work, i.e., higher band.

Commenters requested greater clarity regarding the term ''unacceptable performance.'' In conjunction with related changes made in subpart D (Performance Management), we are clarifying that an employee's performance may be found to be unacceptable based on failure to successfully complete work assignments or other instructions that amplify written performance expectations.

Section 9901.104—Scope of Authority

Section 9901.104 identifies the provisions in title 5 that are subject to waiver or modification under 5 U.S.C. 9902.

Commenters objected to any modification or waiver of any title 5 provision. A commenter suggested this section would grant legislative power reserved for Congress. In fact, this section merely implements an authority provided by Congress. Under 5 U.S.C. 9902, DoD and OPM may prescribe regulations establishing new human resources management and labor relations systems notwithstanding certain title 5 provisions. In other words, Congress has provided that systems established by regulation may be used in place of certain statutory systems. This is not dissimilar to numerous cases where Congress has excluded an agency from a title 5 provision and allowed the agency to develop its own rules administratively, except that, in the case of NSPS, Congress has actually established additional requirements to guide system development in terms of both substance and procedure.

Commenters asserted that this section was misleading in that it did not reveal that the enabling legislation gave DoD authority to waive any part of title 5, including provisions dealing with retirement, health benefits, life insurance, leave, etc. This assertion is incorrect. Section 9901.104 identifies the limited number of title 5 provisions that are subject to waiver or modification. DoD and OPM have no authority to waive or modify title 5 provisions, except as provided for in 5 U.S.C. 9902. (Other laws are affected only for the purpose of dealing with references to waived or modified provisions, as described in § 9901.107). Section 9902(b)(5) of title 5, U.S. Code, states that a system established under 5 U.S.C. 9902(a) is ''not limited by any specific law or authority under this title [i.e., title 5] * * * that is waived in regulations prescribed under this chapter [i.e., chapter 99], subject to paragraph (3).'' The referenced paragraph (3) in 5 U.S.C. 9902(b) includes a subparagraph (D) that links to 5 U.S.C. 9902(d), which in turn specifies that most of title 5 is nonwaivable, except as provided for in section 9902.

Commenters questioned the inclusion of chapters 33 and 35 in the list of waivable or modifiable chapters in § 9901.104, since those chapters include veterans' preference rules. However, § 9901.104(a) states that chapters 33 and 35 may be waived or modified only as authorized by 5 U.S.C. 9902(k). Section 9902(k) of title 5, U.S. Code, requires the Secretary to comply with veterans' preference requirements. Thus, the regulations in subpart E (Staffing and Employment) and subpart F (Workforce Shaping) that modify parts of chapters 31 and 33 do not affect veterans' preference rights and protections.

A commenter questioned the effect of the NSPS regulations on determinations under the Fair Labor Standards Act (FLSA). OPM's authority to administer the FLSA is found in section 4(f) of the Fair Labor Standards Act of 1938, as amended. (See also 29 U.S.C. 204(f).) Since this authority is outside the waivable title 5 chapters, these regulations do not affect OPM's FLSA regulations or OPM's authority to settle FLSA claims.

Section 9901.105—Coordination With OPM

Section 9901.105 identifies the areas which trigger a requirement to coordinate DoD implementing issuances and certain other actions with OPM. As described in the section, ''coordination'' entails (1) providing OPM with an opportunity to review and comment on DoD proposals and to officially concur or nonconcur with all or part of the proposals, (2) taking OPM's views into account, and (3) advising OPM of the final DoD decision, including reasonable advance notice of the decision's effective date.

Commenters expressed concern that § 9901.105 gave DoD too much authority. Some recommended that DoD should be required to get formal OPM approval, rather than just ''coordinate'' with OPM. A commenter also suggested that DoD should be required to coordinate with other agencies with national security missions so that national security employees would have a common framework. Under the enabling legislation, OPM's authority is to approve jointly developed regulations, and OPM has exercised that authority in these part 9901 regulations. By design, and in keeping with the statutory objective of establishing a ''flexible'' system, these regulations give DoD considerable authority within the regulatory framework. At the same time, OPM continues to have a role in overseeing the civil service system and in advising the President on civil service matters, including matters covered by these regulations. We believe a coordination role is sufficient to allow OPM to fulfill its responsibilities. In this coordination role, OPM will ensure that Governmentwide interests and the interests of other agencies are appropriately considered.

In these final regulations, we have added a coordination requirement with respect to the establishment of policies and procedures for time-limited appointments under § 9901.511(d), consistent with our original intent. The supplementary information for the proposed regulations stated that coordination with OPM would occur in this area. (See 70 FR 7563.) We have added a coordination requirement with

respect to the modification of coverage, retention procedures, or appeals rights under subpart F (Workforce Shaping). This coordination requirement is consistent with § 9901.602, which provides that, in accordance with § 9901.105, DoD will prescribe implementing issuances to carry out the provisions of subpart F. Also, we have moved the coordination provision related to qualification standards from § 9901.105(c) to § 9901.105(e) to address concerns raised during the meet-and-confer process that language in the proposed regulations did not clearly identify OPM's role in this matter. Finally, we have added a requirement that the Secretary coordinate with the Director regarding the Secretary's determination under 5 U.S.C. 9902(l) that the Department has in place a performance management system that meets the criteria in 5 U.S.C. 9902(b). This determination must be made before the Department applies the human resources management system established under 5 U.S.C. 9902(a) to an organization or functional unit that exceeds 300,000 civilian employees.

Section 9901.106—Continuing Collaboration

As authorized by 5 U.S.C. 9902(f)(1)(D) and (m), section 9901.106 of the regulations establishes a process called ''continuing collaboration'' for involving employee representatives in the further planning and development of the HR and labor relations systems after promulgation of the joint DoD/OPM enabling regulations. Under this continuing collaboration provision, DoD will provide employee representatives the opportunity to participate in the development of implementing issuances that carry out the provisions of part 9901.

Section 9901.106 implements 5 U.S.C. 9902(f)(1)(D), which requires the Secretary and the Director to develop a method for employee representatives to participate in further planning and development after promulgation of joint DoD/OPM regulations establishing the HR system under 5 U.S.C. 9902(a). In addition, this section provides for the same continuing collaboration with respect to application of the labor relations system established by joint DoD/OPM regulations under 5 U.S.C. 9902(m). Section 9901.106 does not apply to the adjustment of the NSPS enabling regulations themselves. Such regulatory adjustments must be made using the meet-and-confer process described in 5 U.S.C. 9902(f)(1)(A)–(C) or (m), as applicable.

During the meet-and-confer process, several participating labor organizations suggested that adjustments to the HR system or labor relations system should be subject to the meet-and-confer process rather than the continuing collaboration process, and others suggested that there should be collective bargaining over implementing issuances. In addition, commenters questioned whether continuing collaboration on implementing issuances met the requirements of 5 U.S.C. 9902(f)(1)(D), which requires a method for employee representatives to participate in any further planning or development which might become necessary.

As we have already explained, we agree that adjustments to the HR system regulations or the labor relations system regulations would be subject to the meet-and-confer process described in 5 U.S.C. 9902(f)(1)(A–(C) and (m)(3). However, we did not adopt the suggestion to require that implementing issuances be subject to collective bargaining or the meet-and-confer process. Collective bargaining is inappropriate for the development of HR system implementing issuances, since it is inconsistent with the requirements of Section 9902(f)(4). In addition, Congress expressly required DoD and OPM to develop a separate method, apart from the meet-and-confer process, for employee representatives to participate in the further planning and development of the HR system (which will be manifested in the implementing issuances). The continuing collaboration process does meet the requirements of 5 U.S.C. 9902(f)(1)(D), and we therefore have retained this process in the final regulations.

In addition, we have added language to clarify that the continuing collaboration process in § 9901.106 is the exclusive process for employee representatives to participate in the further planning, development, and implementation of the NSPS HR and labor relations systems established by these enabling regulations. (See 5 U.S.C. 9902(f)(4) and (m)(1)–(2).)

We also received comments during the meet-and-confer process, as well as written comments, suggesting that all labor organizations representing employees affected by an implementing issuance should have the opportunity to be represented in the continuing collaboration process. Labor organizations recommended that we eliminate the provision authorizing the Secretary to determine the number of employee representatives who will participate in the continuing collaboration process. While, as a practical matter, it would be administratively inefficient to include representatives from more than 1500 Departmental bargaining units in the continuing collaboration process, we do agree that bargaining units affected by an implementing issuance should be represented in the process. Therefore, we have retained the provision giving the Secretary sole and exclusive discretion to determine the number of employee representatives that may participate in the process, but we have modified the final regulations to make clear that each national labor organization with one or more bargaining units affected by an implementing issuance will be provided the opportunity to participate in the process. We believe this will provide for an efficient and meaningful continuing collaboration process, particularly when large numbers of bargaining units are affected.

Commenters, including labor organizations participating in the meet-and-confer process, suggested that employee representatives should be involved before a draft implementing issuance is proposed. In fact the continuing collaboration process provides the Secretary flexibility to involve affected labor organizations whenever appropriate, including at the conceptual stage. These commenters further suggested that there should be some feedback to the labor organizations regarding the disposition of any recommendations made during the continuing collaboration process. We agree and have modified the regulations to ensure that the Department considers the views and recommendations offered during the process before taking final action. A commenter also expressed concern that the Secretary was not required to adopt suggestions or recommendations, but we believe 5 U.S.C. 9902 intended the Secretary to have the final authority to implement the NSPS. In addition, employee representatives will receive from the Department a written statement of the reasons for taking final action regarding an implementing issuance.

Finally, commenters, including labor organizations participating in the meet-and-confer process, recommended that the regulations provide employee representatives a reasonable time to submit their comments. The complexity of issues will vary greatly from implementing issuance to implementing issuance, which makes it imprudent to establish a standard time for commenting in the regulations. Therefore, we have not adopted this recommendation and have retained the provision authorizing the Secretary to establish these timeframes.

Section 9901.107—Relationship to Other Provisions

Section 9901.107 describes the relationship of the NSPS regulations to other laws and regulations. Commenters expressed confusion regarding the purpose of this section '' in particular, paragraph (b). For example, a commenter suggested that DoD was attempting to exempt itself from title 5 rules on back pay. Paragraph (b) is merely addressing situations where other laws contain references to statutory provisions that are being waived and replaced by NSPS regulations. In general, our purpose is to give those other laws continuing effect by deeming the references to waived provisions to be references to the NSPS regulations replacing those waived provisions. Thus, for example, we are not eliminating NSPS employees' entitlement to back pay under 5 U.S.C. 5596, but are merely giving meaning to references in Section 5596 to statutory provisions in chapters 71 and 77 that no longer apply to NSPS employees. The final regulations reflect a technical revision in paragraph (b)(3) to make clear that all references in section 5596 to provisions in chapter 71 (dealing with labor relations) are considered to be references to corresponding provisions in subpart I of these regulations. Also, in paragraph (b)(2), we revised a regulatory citation consistent with the rearrangement of sections in subpart H.

Commenters expressed concern regarding § 9901.107(a)(2), which (1) provides that part 9901 must be interpreted in a manner that recognizes DoD's need to accomplish its critical national security mission swiftly and effectively and (2) accords DoD and OPM's interpretation of the regulations great deference. The principle of providing deference to the agencies responsible for regulating and implementing a statute is well established. We believe it is entirely appropriate that the regulations recognize that the need for deference is even greater when the agency is responsible for defending and protecting our country and its citizens against external threats. We have clarified that deference is to be given to DoD's and OPM's interpretation of these regulations. In paragraph (c), we have removed the reference to law enforcement officer geographic adjustments under section 404 of the Federal Employees Pay Comparability Act of 1990, since those adjustments are no longer payable.

Finally, in paragraph (d), we have removed the reference to 29 CFR part 1614 as unnecessary because the paragraph specifically provides that the employment discrimination laws that the Equal Employment Opportunity Commission (EEOC) enforces under 42 U.S.C. 2000e *et seq.*, 29 U.S.C. 621 *et seq.*, 29 U.S.C. 791 *et seq.*, and 29 U.S.C. 206(d) are not waived, modified, or otherwise affected by these regulations. This is consistent with the enabling statute and our commitment to full and vigorous enforcement of Federal sector nondiscrimination laws. This means that employees and applicants for employment will have the right to file EEO complaints under those provisions of law as they do today and that EEOC's jurisdiction over those complaints remains unchanged.

Section 9901.108—Program Evaluation

Section 9901.108 requires that DoD establish procedures for evaluating the NSPS regulations and their implementation.

Commenters recommended that other organizations, such as OPM, be involved in program evaluation. They consider it important that program evaluations be conducted by independent, unbiased organizations. This regulation is meant to place a self-evaluation requirement on DoD, not to address third-party evaluations of NSPS. We believe it is a matter of good management that any agency implementing new human resources management and labor relations systems have responsibility for evaluating those systems so that problems can be corrected and improvements made. Under law and Executive order, OPM has general oversight responsibilities with respect to agency administration of human resources management programs. Of course, OPM has a particular interest and accountability with respect to NSPS, since Congress authorized OPM and DoD to jointly prescribe the NSPS regulations. OPM expects to review the results of DoD evaluations of NSPS and may conduct evaluations of its own. Nothing in these regulations prevents evaluations of NSPS by other appropriate organizations, such as the Merit Systems Protection Board or the Government Accountability Office.

A commenter suggested that DoD establish an ongoing mechanism whereby employees can submit observations and recommendations for improving NSPS (including anonymous submissions). The commenter observed that this was especially important when employees (including supervisors) are not part of a bargaining unit. We do not believe it is necessary to establish a special, ongoing mechanism for such input within this regulation. When appropriate for the subject, NSPS evaluation methods established under § 9901.108 will elicit workforce observations and recommendations; and employees also may use normal Departmental processes to comment on the human resources system. In addition, we note that the term ''employee representative'' as used in 5 U.S.C. 9902 is not limited to representatives of labor organizations. DoD may request views and comments from representatives of other employee groups, such as a managers' association.

Commenters requested greater detail on the nature of DoD evaluations, such as evaluation criteria, benchmarks, parameters, and timeframes. Commenters also stated that the program evaluation process in the proposed regulation is too vague with respect to the participation of employee representatives and recommended that we incorporate more specific provisions, such as providing information to employee organizations, timeframes for review, and procedures for employee organizations to collect information directly from employees. Section 9901.101 of these regulations already identifies ''key operational characteristics and requirements,'' which are essentially high-level evaluation criteria. DoD will provide additional detail as it develops its evaluation program. The timing, nature and complexity of NSPS program evaluations will vary greatly and will be affected by the spiral rollout strategy for the human resources system. We consider it to be imprudent to set standard timeframes. We believe this is an area where flexibility is essential so that DoD can adjust the evaluation program based on experience. Accordingly, we have not adopted the recommendations made by commenters for greater specificity.

Subpart B—Classification

General Comments

Commenters were concerned about the lack of specificity about the structure of the NSPS classification system and commented on this issue with regard to each section of this subpart. A number of commenters felt the proposed regulations were too vague and did not provide enough details about how the career groups and bands will be established, which occupations will be in each career group, and which positions will be in each band. Commenters recommended a number of amendments to subpart B to provide more detailed criteria.

Commenters expressed a strong desire that this subpart of the regulations be

more specific and that employees and employee representatives be involved in the design of the NSPS classification system. Responding to the lack of detail in the regulations, labor organizations recommended that the bar on collective bargaining of the NSPS classification system under § 9901.903 of the proposed regulations be removed. Commenters also requested that implementing issuances for this subpart be subject to public review and comment. We have not removed the bar on collective bargaining. While the detailed implementing issuances for this subpart will not be subject to public review and comment, they will be established under the ''continuing collaboration'' provisions in § 9901.106. Under continuing collaboration, the exclusive process for employee representative involvement (5 U.S.C. 9902(f)(4)), employee representatives will have the opportunity to review and comment on draft implementing issuances. Furthermore, we have added a new section at § 9901.205, which further clarifies that classification matters are not subject to collective bargaining. This is consistent with the statutory mandate that the scope of bargaining not be expanded under NSPS (5 U.S.C. 9902(m)(7)).

We understand the desire for the regulations to provide more specificity about how the NSPS classification system will operate. However, the regulations must provide sufficient flexibility for a classification system with career groups and bands that support the market-based features of the NSPS pay system and can be customized to meet DoD's mission requirements and strategic human capital needs both today and in the future. Except as otherwise explained in this section of the **SUPPLEMENTARY INFORMATION**, we have not modified subpart B of the regulations in response to these comments. The regulations provide for implementing issuances that will provide further details, including the criteria for the career groups and definitions of the bands. DoD will consider the suggestions and recommendations made by commenters as it develops these implementing issuances.

Commenters recommended that DoD issue classification standards to ensure consistent application of the NSPS classification system. DoD will establish standardized classification procedures and criteria in the implementing issuances required by this subpart.

Other Comments on Specific Sections of Subpart B

Section 9901.201—Purpose

Section 9901.201 explains the purpose of subpart B, which establishes a classification structure and rules for covered DoD positions and employees. The lack of details in this subpart of the proposed regulations caused some commenters to question whether the proposed classification system would provide for ''equal pay for equal work.'' The merit system principle at 5 U.S.C. 2301(b)(3) ensures that ''Equal pay should be provided for work of equal value, with appropriate consideration of both national and local rates paid by employers in the private sector, and appropriate incentives and recognition should be provided for excellence in performance.'' The NSPS classification system established by these regulations will provide for a classification structure with consistently defined work levels, while the performance management and compensation systems will establish the value of that work, as required under this principle.

Section 9901.202—Coverage

Section 9901.202 identifies the employees and positions eligible for coverage under this subpart, including those otherwise covered by the General Schedule and prevailing rate systems, employees in SL and ST positions, and members of the SES, subject to § 9901.102(d). This section also provides the authority for the Secretary to designate additional employees and positions for coverage. Commenters requested clarification of coverage for students and for laboratories. Students in positions otherwise classified to the General Schedule or other covered classifications systems will be covered under the NSPS classification system. Section 9902(c) of title 5, U.S. Code, specifies that coverage will not occur before October 1, 2008, for the defense laboratories in the following organizations: Aviation and Missile Research Development and Engineering Center, Army Research Laboratory, Medical Research and Materiel Command, Engineer Research and Development Command, Communications-Electronics Command, Soldier and Biological Chemical Command, Naval Sea Systems Command Centers, Naval Research Laboratory, Office of Naval Research, and Air Force Research Laboratory. Section 9902(c)(1) of title 5, U.S. Code, provides that on or after October 1, 2008, these laboratories will be covered to the extent the Secretary determines the flexibilities provided by NSPS are greater than the flexibilities they currently have under demonstration authority.

Commenters recommended excluding Civilian Mariner, Emergency Essential Civilians, and dual status military technicians from coverage under this subpart. We have not changed coverage under this subpart based on these comments. The classification system is an integral part of NSPS and provides the flexibility needed as the foundation for the performance management and pay components of the system.

Section 9901.203—Waivers

Section 9901.203 of the regulations specifies the provisions of title 5, U.S. Code, that are waived for employees covered by the NSPS classification system established under subpart B. As specified in § 9901.203(a) the waivers apply when a category of DoD employees is covered by a classification system established under this subpart, except with respect to OPM's authority under 5 U.S.C. 5112(b) and 5346(c) to act on requests for review of classification decisions, under § 9901.107 and § 9901.222(d). Section 9901.203(b) states that the classification of positions above GS–15 is not waived for certain purposes.

A commenter requested clarification of whether this section waives 5 U.S.C. 6303(f) regarding the annual leave accrual for members of the SES and employees in SL and ST positions. As specified in § 9901.203(b), this is one of the enumerated provisions that may not be waived.

Section 9901.204—Definitions

This subpart defines the key components and terms used in the NSPS classification system. A commenter suggested revising the definition of ''classification'' to remove the phrase ''job evaluation,'' to eliminate potential confusion with ''performance evaluation.'' We did not make this change. The phrase is not used to define classification, but rather is included to explain that the terms may be used interchangeably.

Section 9901.211—Career Groups

Section 9901.211 provides DoD the authority to establish career groups. DoD's implementing issuances will provide the criteria and rationale for grouping occupations or positions into career groups.

One commenter noted that this section does not mention OPM's role in establishing the career groups. Under § 9901.105(c)(1), DoD is required to coordinate with OPM before establishing career groups.

Commenters expressed a need for consistent career groups across DoD. We did not make a change in the regulations based on this comment; however, DoD anticipates uniform career groups. Several commenters provided specific recommendations about grouping occupations together into career groups. Other comments recommended limiting the number of career groups to keep the system simple. In developing the implementing issuances, DoD will consider these suggestions.

Section 9901.212—Pay Schedules and Pay Bands

Section 9901.212 provides DoD with the authority to establish pay schedules within each career group, and pay bands within each pay schedule. One commenter noted that the bands, as defined in this section, are simple to understand.

Commenters noted an incorrect reference in the proposed regulations at § 9901.212(d). We have corrected the reference.

Commenters noted that this section does not mention OPM oversight and recommended that OPM review and approve the pay schedules. Under § 9901.105(c)(1), coordination of pay schedules and pay bands with OPM is required.

The proposed regulations stated in § 9901.221(a) that pay schedules ''may include two or more pay bands.'' We made a technical correction to clarify that a pay schedule may include one or more pay bands.

Commenters expressed a need for consistent pay bands throughout DoD. We did not make a change in the regulations based on this comment; however, DoD anticipates that bands will be defined consistently for a given occupation. Several commenters recommended grouping particular General Schedule grades into pay bands. Commenters also recommended placing specific occupations (*e.g.*, attorney) into particular bands. Additional commenters suggested ways to band supervisory positions, while other commenters requested clarification of how supervisory and team leader positions will be placed into bands. DoD will consider these suggestions and address the number and composition of pay bands and the assignment of supervisor and team leader positions to bands in its implementing issuances.

Several commenters requested further detail on the classification of prevailing rate positions under NSPS. One commenter suggested adopting the bands used for DoD nonappropriated fund (NAF) employees. DoD will consider these comments when establishing NSPS pay schedules and pay bands for prevailing rate positions.

A commenter questioned how duty levels within bands will be described. DoD will establish a process for consistently describing the duties of positions.

Several commenters requested that DoD establish military rank equivalencies for each band, for purposes such as travel accommodations. Such equivalency determinations are outside the scope of the NSPS regulations.

Several commenters noted the importance of dual career paths to support both supervisory and non-supervisory expertise. DoD agrees that this is an important feature to include in the NSPS classification system. The pay band structure supports this concept through pay bands, such as expert and supervisory bands, which could provide for parallel career progression.

Section 9901.221—Classification Process

Section 9901.221 of the regulations requires DoD to establish a method for describing jobs and documenting those descriptions. DoD will establish procedures for assigning each job to an occupational series, career group, pay schedule, and band, and will classify each job accordingly.

Labor organizations participating in the meet-and-confer process expressed concern that employee promotions might be unduly delayed because § 9901.221(d) in the proposed regulations did not provide a timeframe for classification decisions. As a result of these discussions, we have added a requirement in this section that personnel actions implementing classification decisions occur within four pay periods after the date of the decision.

Some commenters expressed concerns that under the NSPS classification system, position descriptions will not be required. They were concerned that the duties required by a position will not be clearly defined and will be too broad, which may result in uncertain expectations or the assignment of work unrelated to an employee's position. While NSPS provides increased flexibility, DoD will establish a process for consistently describing the requirements of positions.

Section 9901.222—Reconsideration of Classification Decisions

Section 9901.222 of the proposed regulations provides employees the right to request that DoD or OPM reconsider the classification of their official position of record including the pay system, career group, occupational series, pay schedule, or pay band.

Commenters expressed concern that this section provides insufficient detail. DoD's implementing issuances will establish policies and procedures for handling an employee's request for reconsideration of classification decisions.

A commenter noted that current regulations provide employees the right to request reconsideration of official titles of their positions of record and asked that the regulations provide this right under the NSPS classification system. We agree and have added ''official title'' to § 9901.222(a).

Commenters were concerned that there was no independent review to a neutral party. Paragraphs (a) and (c) of this section provide employees the right to directly request OPM reconsider the classification of their official position and allow an employee to request that OPM reconsider a DoD classification reconsideration decision, respectively. This right is parallel to the classification appeal right of current General Schedule employees under 5 U.S.C. 5112(b).

Commenters suggested that the regulations authorize retroactive promotions if an employee's position is found to be misclassified, and one commenter suggested that retroactive promotions be limited to 2 years preceding the reconsideration determination. Under the current classification law and regulations (5 U.S.C. chapter 51 and 5 CFR part 511) classification decisions generally may not be made effective retroactively. (See 5 CFR 511.701(a)(4).) In addition, the Supreme Court has held that neither the Classification Act under 5 U.S.C. chapter 51 nor the Back Pay Act under 5 U.S.C. 5596 creates a substantive right to back pay for periods of wrongful classifications. (See *United States* v. *Testan*, 424 U.S. 392 (1976).)

OPM regulations at 5 CFR 511.703 provide an exception to this general rule and allow a retroactive effective date if upon classification appeal an employee is found to have been wrongfully demoted. Any similar retroactive effective date provisions regarding classification reconsideration decisions will be addressed in DoD's policies and procedures for reviewing these requests, under § 9901.222(b).

Commenters suggested that classification reconsideration decisions should be based on OPM's classification standards. The appropriate criteria for reconsideration are those criteria used in classifying the position. As noted in § 9901.222(e), where DoD has adopted OPM standards, OPM criteria will be

used; and where DoD has established its own criteria for classifying positions under this subpart, DoD criteria will be used.

Commenters suggested that DoD should have a central classification appeals office. This change has not been made in the regulations. DoD currently has a central classification appeals office.

Section 9901.231—Conversion of Positions and Employees to the NSPS Classification System

Section 9901.231 of the regulations addresses the conversion of positions to the classification system established under this subpart.

Commenters expressed concerns about the conversion process, finding it vague and requesting further detail. They questioned whether all positions will be reclassified, whether employees will be required to reapply for their current job, and how DoD will deal with employees in entry positions who have completed training but not yet met time-in-grade criteria. A commenter requested that the length of ''save pay'' be a minimum of 2 years. Additionally, commenters requested guidance on converting employees currently classified under demonstration projects and on converting employees leaving DoD from NSPS to the General Schedule. A commenter requested that employees be provided new position descriptions prior to conversion. DoD will consider these comments when issuing the implementing issuances to prescribe the conversion process.

Commenters questioned the applicability of the conversion rules to employees converted to the NSPS pay system from demonstration projects and alternative pay systems. In response to these comments, we revised § 9901.231(b) to provide that DoD will convert employees to the system without a reduction in their rate of pay, including any applicable locality payment, special rate supplement, local market supplement, or ''similar payment under other legal authority.''

We also made a technical correction, changing the term ''special rate'' to ''special rate supplement.'' This change is consistent with other recently published special rate regulations.

Subpart C—Pay and Pay Administration

General Comments

Commenters and the labor organizations participating in the meet-and-confer process articulated concerns about the lack of specificity in subpart C of the regulations on the pay structure and the pay administration rules governing the NSPS pay system. Commenters felt the regulations were too vague and difficult to understand because of the lack of detailed information on such issues as establishment of career groups and pay schedules, establishment and adjustment of pay band rates and rate ranges, establishment and adjustment of local market supplements, composition and funding of performance pay pools, pay-setting, and premium pay. Commenters expressed difficulty in understanding how their rate of basic pay and pay adjustments would be determined under NSPS and the impact individual and group performance would have on pay. Other commenters recommended that the regulations be withdrawn until the entire system could be disclosed or tested.

Commenters, including labor organizations participating in the meet-and-confer process, repeatedly referenced the lack of specificity when recommending a number of amendments to subpart C of the regulations which they felt would provide detailed criteria and situations for setting and adjusting rate ranges; entitlement to rate range adjustments; setting and adjusting local market supplements; entitlement to local market supplements; eligibility and amounts of performance pay increases; and setting pay for initial hires, reassignments, promotions, and reductions in band. Amendments were also suggested for initial conversion into NSPS.

Citing the lack of specificity, commenters and the labor organizations participating in the meet-and-confer process stated that the regulations should be revised to remove the bar in subpart I on collective bargaining of the NSPS pay structure and system and to provide that the NSPS pay system be subject to national consultation rights.

Numerous commenters requested that the regulations be more transparent and that DoD work closely with employees and employee representatives in designing the NSPS pay system. They also cited the lack of details in the regulations as the basis for doubting the fairness and equity of the NSPS pay system.

We recognize the desire that the regulations provide greater specificity and guarantees pertaining to the NSPS pay system. However, the regulations must afford DoD sufficient flexibility to design an agile pay system that is performance-based, market-based, and tailored to DoD's performance goals, mission requirements, and strategic human capital needs. Except as otherwise explained in this section of the **SUPPLEMENTARY INFORMATION**, we have not modified subpart C of the regulations in response to these comments.

However, we concur with commenters that the NSPS pay system must be designed in a transparent and credible manner that involves employees and employee representatives. While we have not removed the bar on collective bargaining in subpart I, the implementing issuances, as defined in § 9901.103, which will include the details of the NSPS pay system, will be covered by the ''continuing collaboration'' provisions in § 9901.106, which Congress established as the exclusive process for the involvement of employee representatives in the further planning and development of the HR system (5 U.S.C. 9902(f)(1)(D) and (f)(4)). (See *Section 9901.103—Definitions* and *Section 9901.106—Continuing Collaboration*.) Further, DoD will consider the suggestions and recommendations made by commenters as it develops implementing issuances for the NSPS pay system. Finally, we have added a new section at § 9901.305, which further clarifies that pay matters are not subject to collective bargaining. This is consistent with the statutory prohibition against expanding the scope of bargaining under NSPS to those matters not subject to bargaining today because they are governed by law or Governmentwide regulations (5 U.S.C. 9902(m)(7)).

Commenters also stated that the regulations should require the new pay system to fully comply with the merit system principles and protect against prohibited personnel practices, implement the performance management provisions of subpart D prior to implementing the pay system in subpart C, require DoD to assess the impact of the pay system on employees prior to implementation, and establish a DoD compensation board. Neither the merit system principles nor the rules regarding prohibited personnel practices are waived under NSPS. Regarding testing and/or assessment of the system prior to implementation, the Department has tested many of these flexibilities via the demonstration projects. Additionally, the Department will use a spiral implementation strategy that will allow it to make modifications as necessary based on lessons learned in the earlier spirals. With regard to the recommendation for a compensation board, establishment of a mechanism for determining rate range adjustments will be addressed in implementing issuances.

Commenters stated the concern that they would lose pay comparability with DoD employees remaining under the General Schedule and with employees in other Federal agencies. Commenters stated that employees should receive pay increases equivalent to the increases they would have received under the General Schedule. Many commenters also stated that the Department should continue to rely on the General Schedule classification and pay system—in essence, a retention of the *status quo*—or make the General Schedule system more flexible. Other commenters questioned the Department's ability to successfully implement the system and/or the ability of the Department's managers to establish and apply performance standards fairly and consistently to pay determinations, especially if they have not used the current system effectively. Other commenters stated that the NSPS pay system must contain the transparency and objectivity of the General Schedule, including the involvement of Congress and the Federal Salary Council.

The Department plans to implement the system described in the proposed regulations. That system is consistent with the statutory requirement that the Department establish a ''pay-for-performance'' system that better links individual pay to performance. (See 5 U.S.C. 9902(b)(6)(I).) Furthermore, we believe Congress and the American public expect their public employees to be paid according to how well they perform, rather than how long they have been on the job. They also expect the Department to maximize its efforts to recruit and retain the most talented and motivated workforce to accomplish its critical national defense mission.

The General Schedule classification and pay system is an impediment to these expectations. The General Schedule does not provide the opportunity to appropriately reward top performers and/or compensate them in relation to their labor market value. Under the General Schedule, performance is rewarded by exception, and market value is defined as ''one size fits all.''

The General Schedule pay system is primarily a longevity-based system, *i.e.*, pay increases are linked primarily to time in grade. In addition to length of time, employees must be found to be performing at an ''acceptable level of competence'' to receive a step increase. However, since 99 percent of all employees satisfy this requirement, virtually all employees can expect to receive base pay increases automatically of up to 30 percent over time. These increases are in addition to annual across-the-board pay increases. Even employees whose performance is unacceptable receive the annual across-the-board and locality pay increases that average between 3 and 5 percent. Over time, even minimally productive employees will progress steadily to the top of the General Schedule pay range and may be compensated significantly more than higher performing employees with less time in grade. A system based primarily on longevity is not designed to base compensation on performance.

Commenters stated that employees have no basis to predict salary from year to year and that they have no way of knowing the amount of their annual salary increases. Commenters stated that many benefits (*e.g.*, leave, retirement, life insurance) are based on salary, and since raises are not guaranteed and cannot be predicted under NSPS, they will be losing benefits. Other commenters stated that their ''high-three'' average salary could be less under NSPS, which will reduce employee annuities. A commenter also noted that because salary costs under the NSPS pay system cannot be easily predicted, the A–76 contract bidding process will be more difficult to analyze.

The Department, while recognizing that there is less predictability under the NSPS pay system, also notes that pay increases are not completely predictable under the current system—other than periodic within-grade increases. Additionally, under current title 5 provisions a number of situations affect an employee's salary (*e.g.*, transfer from one locality pay area to another and change from an occupation with a special rate to an occupation without one) and therefore affect an employee's annuity calculation. Furthermore, NSPS is a pay-for-performance system that will provide meaningful financial rewards to high-performing employees and greater employee control over future pay increases. High-performing employees will have the opportunity to achieve significant pay increases—the higher the performance, the higher the pay. The Department will be able to use salary trends to estimate future costs for purposes such as A–76.

Commenters questioned the Department's statements that DoD has more than 20 years' experience with pay-for-performance systems. Pay-for-performance systems similar to this proposal are not new. Pay banding has been part of the Department's compensation program since 1980, and the Department has a significant amount of experience in implementing and evaluating performance-based pay systems (*e.g.*, demonstration projects). Currently, approximately 44,000 of the Department's employees are covered by performance-based pay systems.

Other Comments on Specific Sections of Subpart C

Section 9901.301—Purpose

Many commenters stated that the pay-for-performance system would lower employee morale, increase competition among employees, and undermine teamwork and cooperation.

The NSPS performance management system provides opportunities for the Department to recognize and reward teamwork. The Department does not assume that employees are solely motivated by pay. As a responsible employer, the Department has the obligation to reward the highest performers with the highest levels of compensation—regardless of their motivational basis for achievement. The Department believes the new system will enhance employees' desire to strive for maximum achievement. More importantly, this will provide for more equitable treatment of employees based on level of performance (which is consistent with merit system principles) and will help create a high-performance culture within the Department. In addition, a pay-for-performance system will allow the Department to be more competitive in recruiting and retaining top performers who have higher value in the labor market.

Commenters stated that since DoD bases military ''within-grade increases'' on longevity, civilian employees should continue to receive time-based increases. The enabling legislation did not grant the Department authority to waive the provisions of title 10, United States Code, under which military pay and benefits are established. Additionally, while the Department values both its military personnel and civilian employees, it continues to support separate pay and benefit systems in recognition of the different attributes and demands of military and civilian service.

Section 9901.302—Coverage

Section 9901.302 lists the categories of employees eligible for coverage under subpart C. Commenters stated that Federal Wage System (FWS) and other prevailing rate employees should not be covered by the NSPS pay system. Others stated that since FWS and other prevailing rate pay systems are already based on market rates, such employees should be excluded from coverage. Other commenters thought the NSPS

pay system should cover GS and FWS employees at the same time.

The Department intends to include all eligible employees in the NSPS human resources management and labor relations systems, as described in the *Subpart A—General provisions* section of this **SUPPLEMENTARY INFORMATION**. However, the Department does not intend to cover FWS employees in the initial implementation phases of the NSPS human resources management system. (See the *Next Steps* section of this **SUPPLEMENTARY INFORMATION**.) Prior to including FWS employees in the system, the Department will conduct additional analyses to determine the appropriate application of NSPS in the trades and crafts environment. Part of that analysis will include reviewing current wage survey approaches.

A commenter urged the regulations to exclude law enforcement officers from the NSPS pay system. The commenter stated that DoD has not provided any evidence that a pay-for-performance system is appropriate for law enforcement work, that law enforcement work often has no counterpart outside the Federal Government for labor market comparisons, and that the proposal does not consider the current difficulties in recruiting and retaining law enforcement officers. The Department considers pay for performance appropriate for law enforcement work. It also recognizes that it will have to use appropriate comparisons when making determinations regarding pay ranges for law enforcement officers.

Commenters stated that employees appointed under the authority of section 1113 of Public Law 106–398 should be added to the coverage statement in § 9901.302. We believe that this refers to section 1101 of the National Defense Authorization Act for Fiscal Year 1999, as amended. This section provides authority for DARPA and selected military department laboratories to hire and pay a limited number of scientists and engineers. As shown in our matrix, these positions are outside the scope of NSPS. (*See Section 9901.102—Eligibility and Coverage.*)

Section 9901.303—Waivers

Section 9901.303 lists the provisions of title 5 which DoD may waive or modify under these regulations, including the student loan repayment authority at 5 U.S.C. 5379. Commenters expressed concern that attorneys and other excepted service positions are ineligible to participate in the student loan repayment program.

Section 9901.303(c) states that employees occupying positions excepted from the competitive service because of their confidential, policy-determining, policy-making, or policy-advocating character are ineligible. This exclusion is identical to the exclusion in 5 CFR part 537, Repayment of Student Loans, and it does not exclude most attorneys and other excepted service employees from eligibility for student loan repayment.

Section 9901.304—Definitions

Section 9901.304 provides definitions of terms used in subpart C. Commenters asked whether extraordinary pay increases (EPIs) are basic pay increases or bonuses. We have revised the definition of ''extraordinary pay increase'' or ''EPI'' to clarify that an EPI may be a basic pay increase or a bonus.

A commenter asked for the meaning of ''pay pool level,'' as used in the definition of ''modal rating.'' The definition of modal rating has been revised to clarify that the term modal rating for this subpart refers to the most frequently occurring rating for employees in the same pay band within a particular pay pool for a particular rating cycle.

In response to general comments requesting greater clarity, we have revised the definition of ''pay pool'' to mean ''the amount designated for performance payouts'' instead of ''the dollar value of the funds set aside for performance payouts.''

Commenters made various other requests for additional definitions of terms used in subpart C, such as ''compensation,'' ''aggregate pay,'' ''conduct,'' ''pay system,'' and ''rate range.'' In some cases, we do not believe a definition is needed. In other cases, we believe it is more appropriate to define or explain such terms in implementing issuances in order to preserve the Department's flexibility.

Section 9901.311—Major Features

Section 9901.311 provides DoD with the authority to establish the NSPS pay system through implementing issuances and lists the major features of the NSPS pay system. Commenters questioned whether supervisory and nonsupervisory employees will be under the same pay system. Others questioned the use of a supervisory differential under the system.

The same pay structure and pay administration rules cover both supervisory and nonsupervisory employees. Details on the treatment of supervisors and non-supervisors under this section will be addressed in the implementing issuances. At this time, DoD plans to include supervisory and nonsupervisory employees in the same career groups but to place them under separate pay schedules. NSPS does not establish a supervisory differential.

Section 9901.312—Maximum Rates

Section 9901.312 provides the Secretary with the authority to establish limitations on maximum rates of basic pay and aggregate pay for employees covered by the NSPS pay system. During the meet-and-confer process, participating labor organizations recommended retitling the section ''Maximum and Minimum Rates'' and adding a requirement to the end of the section that the overall amount allocated for compensation for DoD employees covered by NSPS must not be less than the amount that would have been allocated for compensation if they had not been converted to NSPS. This section has not been changed; however, this topic is addressed under *Section 9901.313—National Security Compensation Comparability* of this **SUPPLEMENTARY INFORMATION**.

Commenters expressed concerns that maximum rates would limit the Department's ability to reward pay for good performance and reduce current pay potential. However, we note that any pay system will include salary ranges (including a maximum rate) for any given set of jobs, consistent with the applicable labor market. Even the most outstanding performers will be limited by the salary range for the job they perform. The proposed NSPS pay system is designed to allow the best performers to progress in pay more rapidly. The ability to reach the range maximum more quickly is a benefit to the high-performing employee.

Section 9901.313—National Security Compensation Comparability

Section 9901.313 is consistent with 5 U.S.C. 9902(e)(4), which requires that, to the maximum extent practicable, through fiscal year 2008, the overall (aggregate) amount allocated for compensation of the Department's civilian employees covered by NSPS may not be less than the amount that would have been allocated for compensation of such employees if they had not been converted to the NSPS pay system.

During the meet-and-confer process, the participating labor organizations recommended adding a new paragraph to this section of the regulations that requires the rates of compensation for DoD civilian employees to be adjusted at the same time and in the same proportion as the rates of compensation for members of the armed forces, as required by 5 U.S.C. 9902(e)(3). Other commenters recommended that civilian

employees receive pay increases identical to members of the armed forces. Comparability with military pay is already addressed under 5 U.S.C. 9902(e)(3) and does not need to be repeated in these regulations.

Commenters requested clarification on the formula DoD will develop in applying this section. Commenters recommended that DoD ensure that through 2008 each individual installation receive the same funding it would have received under the General Schedule. Others, including labor organizations during the meet-and-confer process, recommended that the final regulations state that the money allocated to employees collectively will be the same as that allocated under the General Schedule. Commenters also asked whether the amount of money available to employees after 2008 will be less than the amount available under the General Schedule. Commenters requested that § 9901.313 include a requirement that the Department actually spend the same level of funding for employee pay increases under NSPS as would be spent under the General Schedule. Other commenters pointed out that this section protects a pool of money, but does not protect the pay of individual employees.

The Department is developing financial policy guidance for issuance. In addition, training will be conducted to reinforce these funding requirements. However, Public Law 108–136 does not require that every installation be funded at the same level as under the General Schedule, nor does it require that each individual employee will receive the same pay increase under NSPS that he or she would have received under the General Schedule.

One of the key requirements of the NSPS pay-for-performance system is providing meaningful financial rewards to high-performing employees. Without the proper funding, this requirement cannot be realized. Although the enabling legislation does not mandate a funding level beyond fiscal year 2008, the Department recognizes the importance adequate funding plays in a pay-for-performance system.

Commenters questioned the meaning of various terms used in this section. For example, commenters asked what ''pay in the aggregate'' means in paragraph (a). Commenters also asked for a definition of ''to the maximum extent practicable'' in paragraph (b) of this section and who would decide what ''to the maximum extent practicable'' means. Commenters also questioned the meaning of ''flexibility to accommodate changes in the function of the organization and other changed circumstances that might impact pay levels'' in that same paragraph. Commenters stated that DoD could use the flexibility provided by this section to lower payroll costs and divert such funds to other budget needs.

The enabling legislation recognizes that all future circumstances cannot be predicted. The terminology ''to the maximum extent practicable'' was used in the enabling legislation and was designed to preserve the flexibility to accommodate changes in missions, changes in the composition of the workforce (e.g., mix of new employees, long-term employees, and retirement eligible employees), and other changes that might affect pay levels. Further defining the term would be inconsistent with the intent of the law. However, under NSPS guiding principles, the Department values a high-performing workforce and recognizes that maximum effort to adequately fund civilian employee compensation is crucial. The term ''pay in the aggregate'' refers to the concept addressed earlier that the enabling legislation does not require that each individual employee will receive the same pay increase under NSPS that he or she would have received under the General Schedule. The enabling legislation protects pay for employees overall rather than at the individual level.

A commenter recommended that the two uses of the term ''pay'' in § 9901.313(b) be replaced with the term ''compensation'' because ''compensation'' is defined in paragraph (c) and ''pay'' is not. We agree and have replaced the term ''pay'' with ''compensation'' in § 9901.313(b).

During the meet-and-confer process, the participating labor organizations recommended adding a paragraph to this section to address locality pay funding. Another commenter recommended that the payments included as ''compensation'' under § 9901.313(c) be clarified. To clarify what types of payments are included in the term ''compensation'' as used in this section, we have redefined ''compensation'' to mean basic pay ''taking into account any applicable locality payment under 5 U.S.C. 5304, special rate supplement under 5 U.S.C. 5305, local market supplement under § 9901.332, or similar payment under other legal authority.''

Section 9901.322—Setting and Adjusting Rate Ranges

Section 9901.322 provides DoD with the authority to set and adjust rate ranges, determine the effective date of rate range adjustments, establish different rate ranges and provide different rate range adjustments for different pay bands, and adjust the minimum and maximum rates of a pay band by different percentages.

Commenters, including labor organizations participating in the meet-and-confer process, were concerned about the frequency and effective dates of rate range adjustments. In response to these comments, paragraph (b), which says DoD may determine the effective date of newly set or adjusted band rate ranges, has been modified to add: ''Established rate ranges will be reviewed for possible adjustment at least annually.'' We anticipate making rate range adjustments (when warranted) and performance payouts in January of each year. However, we have not revised the regulations to prescribe an effective date for such adjustments because this would unduly limit the Department's ability to make adjustments at other times in response to significant labor market changes or nonstandard performance cycles.

Commenters questioned whether consideration of the ''availability of funds'' in § 9901.322(a) will allow DoD to use salary funds for other budget needs and noted that this factor appears to contradict the funding guarantees provided under § 9901.313—National security compensation comparability. We believe it is clear in the regulations that DoD must comply with § 9901.313. The availability of funds criterion may be considered only after the requirements of § 9901.313 have been met.

Commenters asked why labor market conditions will be considered in setting and adjusting rate ranges. Others asked why different pay adjustments should be made for different pay bands. Other commenters felt that basing pay for employees on the local job market is a step in the right direction of closing the pay gap between Federal employees and their private sector counterparts. Commenters asked whether a private sector company's lay-offs will cause a rate range minimum or maximum to be adjusted downward.

The Department has not revised § 9901.322(c). The ability to adjust rate ranges based on labor market conditions and to adjust different pay bands by different percentages is a key flexibility in designing a system responsive to labor market factors. Under § 9901.322(a), the Department will consider a number of factors in determining appropriate rate ranges. Labor market conditions are only one of these factors. Others include such factors as the Department's mission requirements, availability of funds, and pay adjustments granted to employees

of other Federal agencies. The NSPS regulations do not give any one factor greater weight than others. Given the circumstances of a particular year, any factor may have a greater or lesser effect on decisions regarding adjustments in rate ranges. Section 9901.322 refers to ''other relevant factors,'' which could include any number of indicators, such as recruitment and retention rates for specific occupations/locations and the projected availability of candidates for specific occupations compared to projected vacancies in these occupations. In the framework set by § 9901.322, private sector pay trends do not require the Department to match these trends automatically, because they are only one of several factors that may be considered in setting and adjusting rate ranges.

Commenters and labor organizations participating in the meet-and-confer process were concerned about the flexibility provided in § 9901.322(d) allowing DoD to adjust the minimum and maximum rates of a pay band by different percentages. The labor organizations recommended that the regulations require pay band minimum and maximum rates to be adjusted by the same percentage. Other commenters recommended that the minimum and maximum rates be adjusted by the same percentage to minimize administrative burdens and to avoid pay compression if the minimum rate is increased, but not the maximum rate.

Commenters also felt that allowing the Department to adjust the maximum rate of a pay band by an amount different from the minimum rate could benefit a few favorite employees at the top of a band by providing opportunities for greater performance pay increases at the expense of other good employees. Commenters also were concerned that, if minimum pay band rates are not increased, employees in such bands will not receive a rate range adjustment. A commenter suggested that employees receive the average percentage increase of the minimum and maximum pay band rates to prevent DoD from freezing pay. The Department does not believe that a requirement to automatically adjust the minimum and maximum pay band rates by the same amount would provide the flexibility necessary to make the NSPS pay structure reflective of market-based factors. However, pay compression is one the factors that will be considered in establishing minimum and maximum rates.

Commenters stated that only Congress should have power to set pay raises. Others stated that § 9901.322 will allow DoD to reduce congressionally approved pay raises to a lower level and that all employees, including high performers, can have their pay cut if DoD decides to use the money for mission or other requirements. Others stated that every year Congress and the President determine the cost-of-living adjustment (''COLA'') increase that employees receive and that it is not fair to take money Congress intended to offset inflation and put the money in a performance pool. Commenters recommended that DoD continue to allocate the annual average pay raise that is authorized and appropriated by Congress for GS employees to NSPS employees who are fully successful in addition to other rewards based on outstanding performance. The current practice under the General Schedule of increasing pay for all employees by the same amount results in the overpaying of employees in some occupations and the underpaying of employees in other occupations. Under NSPS, the Department is creating a system that allows the flexibility necessary to consider both market factors and performance in making compensation decisions.

As set forth in 5 U.S.C. 5303, the amount of the annual January adjustment in the General Schedule is based on a formula using the Employment Cost Index (ECI)—a measure of the movement in wages and salaries for private industry workers. However, the President may propose an alternate plan due to national emergency or economic conditions and notify Congress of his plan to adjust the General Schedule by a different amount than that indicated by the ECI. In recent years Congress has specified in legislation the amount of the increase in General Schedule pay. However, whether it is specified by the President or by legislation, the adjustment in General Schedule rates is not based on a cost-of-living calculation, and is not a COLA increase. (As a point of clarification, nonforeign area cost-of-living allowances (COLAs) are paid as additional compensation to certain Federal employees in Alaska, Hawaii, Puerto Rico, Guam, the U.S. Virgin Islands, and the Commonwealth of the Northern Mariana Islands. The COLA is designed in recognition of the higher living costs in these local areas compared with living costs in the Washington, DC, area. To set the COLA rates, OPM surveys the prices of more than 200 items, including goods and services, housing, transportation, and miscellaneous expenses in each of the allowance areas and in the Washington, DC, area. Section 5941 of title 5, United States Code, and Executive Order 10000 (as amended) authorize the payment of COLAs in nonforeign areas.)

Commenters stated that it is unfair for the Secretary to set pay in secret, that such decisions may result in no or smaller increases for some pay bands compared to others, that unlike General Schedule pay decisions, pay-setting decisions will now be made behind closed doors and employees will have no opportunities to influence the decisions, and that the Bureau of Labor Statistics (BLS) data used by the current system is available for public review and accountability. A commenter also questioned what safeguards are in place to ensure that rate range adjustments do not result in EEO violations. Merit system principles and anti-discrimination laws are not waived under NSPS. The merit system principle at 5 U.S.C. 2301(b)(3) ensures that ''Equal pay should be provided for work of equal value, with appropriate consideration of both national and local rates paid by employers in the private sector, and appropriate incentives and recognition should be provided for excellence in performance.''

The Department concurs with commenters that the NSPS pay system must be designed and executed in a transparent and credible manner that involves employees and employee representatives. The Department will establish in its implementing issuances a process for determining rate range adjustments. Employee representatives will be involved through the ''continuing collaboration'' process.

Section 9901.323—Eligibility for Pay Increase Associated With a Rate Range Adjustment

Section 9901.323 provides that an employee must have a rating of record above ''unacceptable'' to receive a pay increase associated with a rate range adjustment. A number of commenters stated that payment of rate range adjustments should not be based on employee performance. Commenters objected to withholding such annual increases for employees with an unacceptable rating, especially if employees are denied the ability to appeal or grieve the rating. As discussed in our analysis of comments on subpart D, we have revised the regulations to provide bargaining unit employees with the option of grieving a rating of record through a negotiated grievance process. The Department believes that providing pay increases to employees whose ratings are unacceptable is inconsistent with a performance-based pay system.

Commenters and the labor organizations participating in the meet-and-confer process expressed concerns

that § 9901.323(c) penalizes employees who do not have a rating of record by not guaranteeing them a rate range adjustment and that such employees should be presumed to have a rating of above ''unacceptable.'' In response to these comments, we have revised the regulations to provide that an employee without a current rating of record for the most recently completed appraisal period will receive the same percentage increase as employees with a rating above ''unacceptable.'' Paragraph (a) has been modified to add that, except for employees receiving a retained rate under § 9901.355, employees with a current rating of record above ''unacceptable,'' and employees who do not have a current rating of record for the most recently completed appraisal period, will receive a percentage increase in basic pay equal to the percentage by which the minimum of their rate range is increased (not to exceed the maximum rate of the band). Additionally, paragraph (c) has been deleted.

Commenters stated it was not clear whether all employees with a rating of record above ''unacceptable'' will receive the same percentage increase. Other commenters stated that this section implies that all employees above ''unacceptable'' will receive a rate range adjustment, but those with salaries at the top of the pay band may not if the maximum rate of that band is not increased.

Section 9901.323(a) provides that employees with a rating of record above unacceptable will receive a percentage increase in basic pay equal to the percentage by which the minimum rate of their rate range is increased. However, this increase is subject to § 9901.356(b), which provides that an employee's rate of basic pay may not exceed the maximum rate of the employee's pay band rate range, except when pay retention under § 9901.355 applies.

Commenters asked if an employee's pay could drop below the minimum of the pay band rate range due to not receiving a pay increase based on unacceptable performance. Other commenters asked whether employees will be converted to the next lower band if pay falls below the pay band minimum rate. Under the NSPS pay system, an employee's pay could drop below the minimum of the pay band rate range if the minimum of the rate range exceeds the employee's salary. However, this situation does not require the employee to be placed in a lower pay band. The employee's pay band is determined by work assignment.

Commenters asked if employees on retained rates will receive rate range increases. We have revised § 9901.323(a) to clarify that employees receiving a retained rate under § 9901.355 will not receive a rate range increase.

Section 9901.331—General

Section 9901.331 includes general provisions regarding local market supplements. Commenters asked for clarification of the difference between GS locality pay and the NSPS local market supplements described in § 9901.331. Commenters also asked whether local market supplements will replace current GS locality rates and special rates and nonforeign area cost-of living-allowances. Finally, some commenters questioned the cost of administering a new locality pay system.

The local market supplement authority replaces the GS locality pay and special rate authorities. Under NSPS, employees stationed in locations outside the 48 contiguous States will continue to receive applicable foreign and nonforeign area cost-of-living allowances and other differentials and allowances under 5 U.S.C. chapter 59.

Under the GS locality pay system, all employees in a geographic location receive the same locality rate without regard to their occupation or the level of duties and responsibilities they are expected to perform. This ''one-size fits all'' method treats all occupations alike, regardless of market value and competition. This method results in underpaying employees in some occupations and geographic areas while overpaying others (as compared to the applicable labor market). NSPS is designed to be much more market-sensitive. It gives the Department significant discretion to set and adjust the minimum and maximum rates of pay for each pay band based on national and local labor market factors and conditions. Instead of ''one size fits all'' pay increases, NSPS allows the Department to allocate payroll dollars to the occupations and locations where they are most needed to carry out the Department's mission. The Department believes that the development of a new system to identify appropriate rate range adjustments and local market supplements is critical to appropriately compensating its workforce and will consider cost factors as it determines the most effective and efficient method for this purpose.

In response to comments regarding the lack of specificity in the pay retention provisions of the regulations, we have removed the language in § 9901.331 providing DoD with the authority to determine the extent to which local market supplements will apply to employees receiving a retained rate. Section 9901.355(e) provides that employees receiving a retained rate are entitled to any applicable local market supplement. (See *Section 9901.355—Pay retention*.)

Section 9901.332—Local Market Supplements

Section 9901.332 provides DoD with the authority to establish local market supplements and local market area boundaries. This section also provides the purposes for which local market supplements are considered basic pay.

A number of commenters expressed concerns about variations among local market supplements for occupations in the same geographic area. The commenters felt this flexibility allows errors and inequities to develop over time and will be confusing to employees. Other commenters were pleased to see a shift in the determination of locality pay from strictly geographic to occupation-based as a way to help recruit and retain employees. The Department believes that variations in local market supplements based on occupations are appropriate and reflective of the conditions in some labor markets.

Commenters felt that the criteria for establishing local market supplements and local market areas should be in regulation. A commenter stated that the regulations should require clear, compelling criteria for the establishment of additional local market supplements that require a balance of human resources interoperability with mission requirements. Another commenter recommended that the regulations be modified to ensure that employees in rural areas and those adjacent to current locality pay areas are not unfairly impacted. Others questioned whether the cost of living, hazardous duties, education, or unique or special skills requirements will be considered in establishing local market supplements. A number of commenters asked whether local market supplements will apply to employees stationed in nonforeign and foreign areas and noted that such payments may help with staffing in those areas.

In response to comments requesting additional specificity, we have revised paragraph (a) to clarify that the Secretary will have sole and exclusive authority to establish local market areas for ''standard local market supplements'' and ''targeted local market supplements.'' We have also added definitions of ''standard local market supplement'' and ''targeted local

market supplement'' in § 9901.304. Standard local market supplements apply to employees within a given pay schedule or band who are stationed within a specified local market area, unless a targeted local market supplement applies. Targeted local market supplements apply to a defined category of employees (based on occupation or other appropriate factors) that may be established to address recruitment and retention difficulties or for other appropriate reasons.

DoD will consider the comments regarding the establishment of local market supplements and local market areas in developing the implementing issuances. The regulations do allow for the possibility of establishing local market supplements in foreign and nonforeign areas outside the 48 contiguous States; however, in determining the need for and level of any such supplements, DoD will take into account employees' entitlement to allowances and differentials under 5 U.S.C. chapter 59.

A commenter questioned the attempt to preclude judicial review of local market area boundaries under § 9901.332(b). We have clarified § 9901.332(b) to be more consistent with the limitation on judicial review of locality pay areas in 5 U.S.C. 5304(f)(2). Section 5304(f)(2) of title 5, U.S. Code, is not waived by these regulations, but is modified for continued application. Judicial review of any DoD regulation regarding the boundaries of standard local market areas is limited to whether or not the regulation was promulgated in accordance with the administrative procedures requirements in 5 U.S.C. 553. This same type of limitation on judicial review applies to locality pay areas administered by the President's Pay Agent under the current locality pay law.

A number of commenters asked for clarification on the purposes for which local market supplements are considered basic pay. Commenters stated that local market supplements should be considered basic pay for the same purposes as GS locality rates. Commenters also questioned whether local market supplements will be used to compute awards and performance payouts under § 9901.342 that are computed as a percentage of basic pay.

In response to these comments, we have revised paragraph (c) to add that local market supplements are basic pay for recruitment, relocation, and retention incentives, supervisory differentials, and extended assignment incentives under 5 U.S.C. chapter 57, subchapter IV, and 5 CFR part 575, and for lump-sum payments for accumulated and accrued annual leave under 5 CFR part 550, subpart L, consistent with the locality pay regulations at 5 CFR part 531, subpart F. We note that paragraph (c) includes a catchall provision under which local market supplements are considered basic pay in computing other payments and adjustments for which locality pay under 5 U.S.C. 5304 is considered basic pay. (See § 9901.332(c)(11) in these final regulations. We have revised the language in the proposed regulations, which was located in § 9901.332(c)(8), to clarify this provision.) Thus, local market supplements also would be used in computing percentage-based awards under 5 U.S.C. chapter 45, consistent with the treatment of locality pay under 5 CFR 531.610(h). Local market supplements are not considered basic pay in applying the performance payouts provision; instead, local market supplements are applied after determining the employee's new rate of basic pay.

Section 9901.333—Setting and Adjusting Local Market Supplements

Section 9901.333 provides DoD with the authority to set and adjust local market supplements and determine the effective date of such adjustments. A number of commenters requested clarification on how labor market conditions would be considered in setting local market supplements. For example, some commenters questioned how local market supplements will work for occupations that have no local labor market, no private-sector job equivalents, or where local market rates are not high. Other commenters noted that local labor markets can be volatile and that the ups and downs of the market may be difficult for employees to understand. Commenters also questioned whether local market supplements may be reduced. The Department will consider these comments as it develops its procedures for setting and adjusting local market supplements.

Commenters stated that 9901.333(b) should be revised to state that supplements will be reviewed periodically. Labor organizations participating in the meet-and-confer process recommended that the regulations be amended to require that local market supplements be adjusted the first pay period in January and that supplements be reviewed at least annually in conjunction with rate range adjustments to determine whether an adjustment is warranted. Section 9901.333(b) provides that DoD will review established local market supplements at least annually. This language is retained since it does not prevent the Department from conducting a review more frequently. However, we have not revised the regulations to prescribe an effective date for such adjustments because this would unduly limit the Department's ability to make adjustments at other times in response to significant labor market changes.

Section 9901.334—Eligibility for Pay Increase Associated With a Supplement Adjustment

Section 9901.334 provides that an employee must have a rating of record above ''unacceptable'' to receive a pay increase associated with a local market supplement adjustment. A number of commenters stated that payment of local market supplement adjustments should not be based on employee performance. Commenters objected to withholding such increases for employees with an unacceptable rating, especially if employees are denied the ability to appeal or grieve the rating. As discussed in our analysis of comments on subpart D, we have revised the regulations to provide bargaining unit employees with the option of grieving a rating of record through a negotiated grievance process. However, the Department does not consider providing pay increases to employees with ratings of unacceptable to be consistent with the intent of a performance-based system.

Commenters and the labor organizations participating in the meet-and-confer process expressed concerns that § 9901.334(c) penalizes employees who do not have a rating of record by not guaranteeing them a local market supplement adjustment and that such employees should be presumed to have a rating of above ''unacceptable.'' In response to these comments, we have revised the regulations to specify that an employee without a current rating of record for the most recently completed appraisal period will receive the same percentage increase as employees with a rating above ''unacceptable.'' Paragraph (a) has been modified to add that employees with a current rating of record above ''unacceptable'' and employees who do not have a current rating of record for the most recently completed appraisal period will receive a pay increase resulting from a supplement adjustment. Additionally, paragraph (c) has been deleted.

Commenters asked whether employees on retained rates will receive local market supplement increases. Commenters also asked whether all employees with a rating of record above unacceptable will receive the same percentage local market supplement

increase. As previously discussed in this Supplementary Information, § 9901.355 is revised to provide that employees receiving a retained rate will receive any applicable local market supplement increase.

Section 9901.341—General

During the meet-and-confer process, the participating labor organizations recommended adding language at the end of § 9901.341 stating that the pay and pay administration process must be fair, transparent, and credible. The regulations already set forth the objectives that the entire NSPS, including the NSPS pay system, be understandable, credible, trusted, and consistent with merit system principles. (See § 9901.101.)

Based on a comment regarding language consistency between §§ 9901.341 and 9901.342(a), to maintain consistency we have added individual contribution as a factor in awarding performance-based pay to employees.

Section 9901.342—Performance Pay Increases

Section 9901.342(a) provides an overview of the DoD performance-based pay system for employees under a performance management system established under subpart D. Under a pay-for-performance system, a portion of the annual salary increase received by an employee is based on his or her rating of record. The rating is retrospective, looking back over the employee's performance and contribution over the applicable rating period. This section establishes that NSPS will use a pay pool concept to manage, control and distribute performance-based payouts. Pay pool panels serve as calibration committees and are normally populated by management officials. DoD implementing issuances will provide additional details regarding pay pool constructs, pay pool management, and a pay pool reconciliation process. The pay pool concept improves fairness over the current performance evaluation methodologies in the Department by forcing the open collaboration of peer managers in discussing and assigning ratings to employees within the pay pool. The specific processes for performance management and the accompanying performance-based pay decisions will be addressed in DoD implementing issuances.

Commenters expressed mixed concerns about basing performance payouts on employee contributions. Some commenters recommended that the regulations allow components to implement a contribution-based system. Other commenters agreed that the level and value of an employee's contribution should be factored into performance payouts. Others recommended that contributions not be factored into performance payouts because management controls an employee's possible contribution level and the contribution assessment is arbitrary. NSPS is a performance-based system, and we believe it is appropriate to consider an employee's contribution in the rating and performance payout an employee receives.

Based on a comment regarding language consistency between §§ 9901.341 and 9901.342(a), we have added team performance as a factor in awarding performance-based pay to employees. Other commenters questioned how team or organizational performance will affect individual employee payouts. Some commenters believe that organizational performance should not affect an individual's pay, while other commenters stated that performance payouts should be based on organizational performance. Under the NSPS range of shares concept, organizational performance can be considered in determining the appropriate share assignment.

Regarding the use of pay pool panels, a number of comments suggested that pay pool deliberations and recommendations are susceptible to internal politics, funding availability, staffing needs, and personal favoritism. Similarly, many commenters, including labor organizations participating in the meet-and-confer process, expressed concern that unless the regulations preclude supervisors from inclusion in the same pay pool as their subordinate employees, management cronyism would undermine the system. Commenters also expressed concerns about a pay pool manager's ability to overturn a supervisor's decisions. Other commenters questioned how consistency will be ensured among pay pools.

Subject to continuing collaboration, implementing issuances will require that pay pool management be transparent and credible while protecting the privacy interests of employees concerned and allowing the free exchange of viewpoints and observations. Subject to continuing collaboration, implementing issuances will provide safeguards to support the neutrality and impartiality of pay pool proceedings. The responsibilities of a pay pool manager under a pay-for-performance system typically include the review of supervisors' proposed ratings of record for consistency and equity across organizational units and to guard against potential discrimination or politicization before finalizing ratings. The regulations and implementing issuances will require that decisions made by pay pool panel members and managers must be consistent with the merit systems principles found in 5 U.S.C. 2301. We have added a new paragraph (a)(3) in § 9901.342 that expressly states the requirement that pay pools will be managed by a pay pool manager or pay pool panel, with the responsibility for reviewing proposed rating and share assignments to ensure fairness and consistency.

Regarding the comments on the commingling of employees and supervisors in the same pay pool, we have not prescribed this level of specificity for the structuring of the pay pool in this rule. There are a number of considerations relative to pay pool constructs. These include functional or organizational orientations, funding, and population size. Depending on these and other factors it may be appropriate to commingle supervisory and non-supervisory personnel provided other measures are taken to prevent actual and perceived conflicts of interest. For example, participants in the pay pool process will not be allowed to participate in deliberations that directly affect their own performance assessment or pay. This level of detail is best handled in implementing issuances.

Some comments expressed the belief that pay-for-performance is contrary to the needs of national security and that instead of encouraging team cooperation and organizational efforts, the system will encourage unhealthy competition. The deterioration of team or collaborative work ethics and atmosphere is not an inevitable outcome of a pay-for-performance system. We expect that the importance of teamwork and cooperation will be reinforced in the expression of performance standards and performance objectives. Through communication, ongoing feedback, performance rating and performance rewards, the importance of teamwork and cooperation will be impressed on employees.

Some commenters questioned the use of the modal rating for employees who do not have a rating of record. The final regulations continue to provide that, for certain employees without a rating of record, DoD will base the performance payout under § 9901.342 on the employee's last rating of record or modal rating, whichever is most advantageous to the employee. (As discussed later, we have made some

clarifying language changes in § 9901.342(f) and (g) and added a sentence to give DoD authority to address situations where it is not possible to determine the modal rating. Also, we have revised the definition of ''modal rating'' in § 9901.304.) DoD considered several options for addressing this issue and determined that use of a modal rating is the most equitable. The modal rating provision applies only to employees returning from a period of military service as described in § 9901.342(f) or employees returning to duty after being in a workers' compensation status as described in § 9901.342(g), except as otherwise provided in DoD implementing issuances. (See § 9901.342(a)(2).)

We note that in § 9901.342(a)(2), the term ''performance payout'' has been substituted for ''pay increase or bonus payment under this part'' as a matter of consistent terminology.

During the meet-and-confer process, the participating labor organizations recommended deletion of the proposed language at § 9901.342(a)(2) authorizing the appropriate rating official to prepare a more current rating of record, consistent with § 9901.409(b). Other commenters also were concerned about the fairness of this provision. One commenter agreed with the flexibility to prepare a more current rating of record, but cautioned that any payout should be based on overall performance, not performance that has occurred more recently.

We have not changed the regulations in response to these comments. This provision is intended to allow a rating official to raise or lower an employee's rating of record based on sustained and significant changes in his or her performance since the last rating of record and is consistent with current regulations. In keeping with the principle that pay and retention should be linked to performance, it is incumbent on management to ensure that the record accurately reflects performance, whether it has improved or deteriorated. This is particularly true in the case of an employee who was previously performing below expectations and who shows improvement over a significant period of time, perhaps as a result of work restructuring or additional training. We note that the issuance of any rating of record is subject to reconsideration procedures. While the regulations remain unchanged, the implementing issuances will require that such ratings be subject to procedures similar to those required for ratings issued at the end of the appraisal period.

A number of comments addressed concerns that pay increases will be subject to influences beyond the control of the individual employee, such as the number of shares assigned to other employees in the pay pool, pay pool funding levels, the use of pay pool funds for entry/developmental pay increases, and the distribution of discretionary payments. Similarly, many commenters were concerned that if more employees within a pay pool receive higher ratings, the value of the payout for each employee is reduced. Commenters also suggested that this pay pool and shares system will result in forced ratings distributions and quotas. Other commenters, including the labor organizations participating in the meet-and-confer process, made a number of recommendations regarding the funding for pay pools. Finally, a number of commenters expressed concerns about including across-the-board increase money in pay pool funds.

It is true that pay pools will not have unlimited funds available. To create a system based on that approach would be fiscally unsound. In keeping with our guiding principles, the NSPS performance management system is designed to place greater emphasis on making meaningful distinctions between different levels of performance and to reward employees appropriately based on those levels. The proposed regulations state that supervisors and managers will be held accountable for making meaningful distinctions among employees based on performance and contribution. Implementing issuances will continue to stress accountability at all levels for performance evaluations and the related pay decisions and will provide more specific guidance on pay pool funding. We note that a share-based system does not result in forced distribution of ratings, since a share-based system does not rely on the distribution of ratings to control costs. Current across-the-board increases will be replaced by a combination of adjustments, including adjustments to minimum levels of the rate ranges and performance-based increases, and, thus, such funding may be included in the pay pool. The Department believes that this is consistent with intent of the enabling legislation.

Another recurring theme among commenters was the concern that an employee's pay would be subject to his or her manager's communication and persuasion skills as demonstrated at the pay pool panel meetings. We agree that care must be taken during the pay pool management process to ensure that an employee's final rating is more than a function of the negotiating skills of his or her manager. Expectations for raters and pay pool panel participants will be emphasized in training materials and implementing issuances.

During the meet-and-confer process, participating labor organizations requested that a fixed number of shares, rather than a range of shares, be associated with a particular rating level. Commenters also expressed the belief that by fixing a single share per level of performance, employees would be better insulated from bias and unfair treatment by management. The Department recognizes that a valid, reliable, and transparent performance management system with adequate safeguards for employees is essential. However, for a system to be effective, it must avoid a rigid, one-size-fits-all approach by providing the flexibility to address a variety of circumstances. By allowing a range of decision points regarding the number of shares, managers can more appropriately address the variety and complexity of factors that relate to employee compensation. For example, factors that may be considered in the assignment of shares could include the position of the employee's salary within the rate range, the receipt of a promotion pay increase within the last year, the employee's contribution to the accomplishment of important organizational objectives, team/organizational performance, whether the performance was sustained and likely to continue over time or related to a particular set of tasks or projects, or other appropriate factors. In response to the concerns expressed regarding use of a range of shares, we have added a new paragraph (c)(3) in § 9901.342, which (1) requires that DoD provide in implementing issuances additional guidance on the use of share ranges, including some examples of appropriate use of factors in making specific share assignments; (2) requires that DoD organizations inform employees of the factors that may be considered in making share assignments within their pay pool at least 90 days prior to the end of the appraisal period; and (3) provides that pay pool managers and/or pay pool panels will review proposed share assignments to ensure that factors are applied consistently across the pay pool and in accordance with the merit system principles.

Section 9901.342(d) of the regulations provides the parameters and criteria for the performance share calculation methodology in sufficient specificity so that managers, employees, and employee representatives can better understand how performance pay increases will be determined and paid. At the same time, the regulations allow

DoD to tailor the performance share calculation to the mission and performance needs of individual components and the specific performance requirements and priorities of organizations, individuals, and occupational groups.

Commenters requested that the regulations provide a more detailed explanation of the formulas used to derive share values and payout amounts. This can best be handled by DoD in its implementing issuances or operating procedures. Similarly, some comments requested that share values be set or predetermined. Some commenters recommended that share value be expressed as a dollar amount. Others recommended that share value be expressed as a percentage. Because DoD is prohibiting the use of forced ratings distribution, the exact value of a share cannot be determined prior to completion of the rating process. In addition, the regulations preserve flexibility in setting share values to establish a more nimble pay-for-performance system. We have not changed the regulations in response to these comments.

Commenters questioned the relationship of the share value to the employee's salary. DoD intends to prescribe a payout calculation such that an employee's payout will be a function of the pool total base salary value, the number of shares assigned within the pool, the employee's salary (if the share value is computed on a percentage basis), and the number of shares assigned to the employee.

Section 9901.342(d)(3) authorizes DoD to establish ''control points'' within a pay band that limit increases in the rate of basic pay and may require certain criteria to be met for increases above the control point. A commenter likened control points to ''invisible barriers that prevent most employees from ever reaching the top of their band.'' The same commenter suggested that the use of pay pools will provide sufficient cost control without the need for control points. A number of other commenters also expressed similar concerns about control points. During the meet-and-confer process, participating labor organizations recommended that the authority to establish control points be deleted from the regulations.

The concept of control points is not inconsistent with the goals of a pay-for-performance system, which envisions a greater link between pay decisions and an individual's performance. Control points are tools to manage employees' progression through the bands and can help to ensure that only the highest performers move into the upper range of a pay band, which would allow the Department to set pay more consistently with the labor market and to be more effective in attracting and retaining top performers. Several DoD personnel demonstration projects have successfully used control points in their pay-for-performance systems. We will ensure that if control points are used under NSPS, they are well defined and understandable to employees.

Section 9901.342(d)(4) specifies that a performance payout may not cause an employee's rate of basic pay to exceed the maximum rate of the band or applicable control point. Commenters expressed concerns that this provision unduly limits pay increases and that the paragraph should be modified to state that an employee's rate of basic pay may not exceed a control point only if the employee does not meet the applicable control point criteria. We have not modified the regulations in response to this comment, since we believe the regulatory text is clear. Section 9901.342(d)(4) states that an employee may not receive a pay increase that causes his or her rate of basic pay to exceed an ''applicable'' control point. A control point is not applicable unless the employee fails to meet the criteria established under § 9901.342(d)(3).

Also relative to § 9901.342(d)(4), a number of comments relayed concern that management decisions relative to the distribution of performance payouts between bonuses and increases in basic pay would be subject to bias and favoritism. Many comments suggested that organizations might institute polices that promote the use of lump-sum payments in lieu of increases in basic pay as a cost savings measure. Commenters especially emphasized the long-term cost to employees in terms of retirement benefits. We acknowledge that such decisions cannot be taken lightly. Again, these regulations require, and DoD implementing issuances will emphasize, that such distinctions must be consistent with the merit system principles found in 5 U.S.C. 2301 and supported by employee job performance and contribution. Training and supplemental guidance will illustrate the short- and long-term outcomes of payout distribution decisions as they affect organizations and employees. In addition to the system requirements at § 9901.405(b)(4) and (c), which hold supervisors accountable for effective performance management, the proposed regulations provide at § 9901.406(c) that the performance expectations for supervisors and managers will include the assessment and measurement of how well they exercise their performance management responsibilities under NSPS.

Consistent with other changes in the regulations that clarify how DoD will grant performance payouts to retained rate employees, we have amended § 9901.342(d)(6) to clarify that for an employee receiving a retained rate under § 9901.355, a lump-sum performance payout may not exceed the amount that may be received by an employee in the same pay pool with the same rating of record who is at the maximum rate of the band. (See *Section 9901.355—Pay Retention* for additional information.)

Section 9901.342(e) specifies the circumstances under which performance payouts may be prorated. Commenters asked for clarification or made suggestions regarding when and how performance payouts would be prorated. This language remains unchanged. Policies relative to proration can best be handled by DoD in its implementing issuances.

Sections 9901.342(f) clarifies how DoD will set the rate of basic pay for employees upon reemployment after performing honorable service in the uniformed services and how intervening performance pay adjustments for such employees would be determined upon reemployment. The regulations require DoD to issue implementing issuances governing how it will set the rate of basic pay for employees upon reemployment and require DoD to credit the employee with intervening rate range adjustments under § 9901.323 and increases from performance payouts. Commenters agreed that employees returning from performing honorable uniformed service should not be disadvantaged under the NSPS pay system. However, some comments suggested that employees performing military service will be negatively affected upon return to civilian service under NSPS. For example, a commenter noted that the regulations do not address the flexibility managers will have to assign a returning service member to the low end or the high end of the share range assigned to a rating level. We have revised the language to clarify that the pay of an employee returning from qualifying service (who does not have a rating of record for the appraisal period serve as the basis for the performance payout) will be set at a rate including performance-based pay increases equal to either the average increase received by employees assigned the modal rating or assigned the same rating as the employee's actual, most recent rating of record, whichever is most advantageous to the employee.

Additionally, the following language was added to § 9901.342(f): ''In unusual cases where insufficient statistical information exists to determine the modal rating or when previous ratings do not convert to the NSPS rating scale, DoD may establish alternative procedures for determining a basic pay increase under this section.'' This language was added primarily in response to concerns that some organization may experience skewed pay pools during the first years NSPS is implemented because of the absence of a statistically significant number of employees in the pay pool due to mobilizations (as in the case of military technicians).

Section 9901.342(g) clarifies how DoD will set the rate of basic pay for employees upon reemployment after being in a workers' compensation status. This section has been modified to the extent necessary so that it remains consistent with § 9901.342(f) and in response to comments made about paragraph (g) that were similar to those made about paragraph (f).

During the meet-and-confer process, the participating labor organizations recommended adding a new paragraph to § 9901.342 requiring that all provisions in part 9901, including ratings of record and payouts, be subject to a final independent third-party review. A commenter agreed with the rule in § 9901.342(c) that employees with unacceptable ratings of record should not receive a performance payout, but only if the employee has the ability to appeal or grieve the rating. Other commenters made similar recommendations and questioned what appeals or grievance process employees can use if they do not agree with their pay increase. As discussed in our analysis of comments on subpart D, we have revised the regulations to provide bargaining unit employees with the option of grieving a rating of record through a negotiated grievance process. If that process results in a new rating of record, the employee's rate of basic pay would be adjusted accordingly. However, management decisions as to the amount of a pay increase are not subject to review as long as those decisions are consistent with the validated rating of record and within the flexibilities provided by the regulations.

During the meet-and-confer process, the participating labor organizations recommended adding a requirement to the regulations for all employees rated ''fully successful'' or better to share in performance payouts. We have not accepted this recommendation. The Department has not definitively identified the number of rating levels or their descriptors. Therefore, it is premature to guarantee a pay increase to any specific group of employees.

Section 9901.343—Pay Reduction Based on Unacceptable Performance and/or Conduct

Section 9901.343 provides DoD with the authority to reduce an employee's rate of basic pay for unacceptable performance or conduct under the adverse action procedures in subpart F of these regulations. During the meet-and-confer process, the participating labor organizations were very concerned that the proposed regulations provided DoD with the authority to reduce an employee's pay any number of times within the appraisal period. In response we have revised this section to specify that an employee's rate of basic pay may not be reduced more than once in a 12-month period based on unacceptable performance, conduct, or both.

Other commenters felt that pay reductions should not be permitted for any reason and that pay reductions do not improve performance, are disruptive to the workplace, and have greater impact on an employee's family than on the employee. DoD believes it is necessary to retain flexibility to reduce the pay of an unacceptable performer in order to achieve and retain a high-performing workforce.

During the meet-and-confer process, participating labor organizations recommended that § 9901.343 specify that the maximum 10 percent reduction will include any annual increase, local market supplement, or other pay increases withheld from the employee but given to employees who are similarly situated and rated above unacceptable. Similarly, the labor organizations recommended that the proposed regulations be revised to provide that the pay of employees who improve performance within 90 days will be adjusted retroactively to reflect pay increases they would have received if they had been performing at an acceptable level at the time such increases were effected for the rest of the workforce. Other commenters felt that a 10 percent limit on pay reductions is too high. The recommendation to count increases not received (e.g., minimum rate range adjustments) as part of the 10 percent reduction limit, to restore all lost pay if the employee's performance improves during a 90-day improvement period, and to lower the pay reduction limit are inconsistent with the intent of the NSPS pay system.

Commenters and the labor organizations participating in the meet-and-confer process recommended that § 9901.343 clarify that reductions in pay under this section are subject to adverse action procedures. Such clarification is unnecessary because § 9901.343 already refers to the regulations at § 9901.352 and § 9901.354 clarifying that such reductions are subject to adverse action procedures under subpart G (or similar authority).

Section 9901.344—Other Performance Payments

Section 9901.344 of the regulations provides DoD with the authority to reward employees or groups of employees through other types of payments. Situations where such payments may be warranted include recognition of extraordinary individual performance and organizational or team achievements. This section further explains that an employee in receipt of an extraordinary pay increase (EPI) is expected to continue to perform and contribute at an exceptionally high level.

Both public comments and recommendations made by labor organizations participating in the meet-and-confer process suggested that funding for these payments should be separate from funding for the performance pay pools. Some of the comments expressed concern that use of these payments would unfairly divert funds from deserving employees to unfairly reward or overpay other employees. As stated previously, managers and supervisors at all levels will be held accountable for fairly and impartially making performance-based reward determinations. DoD implementing issuances will provide for checks and balances to mitigate the potential for abuse.

Commenters asked whether extraordinary pay increases (EPIs) are basic pay increases or bonuses. As previously stated, we have revised the definition of ''extraordinary pay increase'' or ''EPI'' in § 9901.304 to clarify that an EPI may be a basic pay increase or bonus. (See *Section 9901.304—Definitions*.)

Commenters questioned whether an EPI could be revoked if an employee does not continue to perform at an exceptionally high level. Others recommended that the exceptionally high level performance expectation be removed from the regulations as an unfair requirement. We believe that the extraordinary pay increase is an important flexibility and have not revised the language.

Commenters asked for clarification on whether payments in recognition for organizational or team achievement will be basic pay increases or bonuses and

what other special circumstances might warrant additional payments. Under NSPS payouts based on organizational or team achievement could take the form of either basic pay increases or bonuses. Any other special circumstances will be addressed in implementing issuances.

Section 9901.345—Treatment of Developmental Positions

Section 9901.345 of the regulations provides DoD with the authority to establish policies and procedures for adjusting the pay of employees in developmental positions. During the meet-and-confer process, the participating labor organizations requested that the regulations clarify how such employees will progress through a pay band. Other commenters also asked for clarification and recommended that entry/developmental employees receive pay increases equivalent to GS entry/developmental pay increases. The language has been modified to clarify that entry/developmental pay adjustments may be made in lieu of or in addition to those authorized under § 9901.342. However, we have not modified the language to require that developmental employees progress in the same time frames as under the current system, because such a change would be inconsistent with a performance-based system.

During the meet-and-confer process, participating labor organizations also requested the addition of language so that employees in developmental positions will be given equivalent access to the training and assignments needed to meet standardized assessment or certification points and progress to the full performance band on a timely basis. In many cases, employee training and development occurs within DoD on a decentralized basis. Since training and development opportunities are administered according to each unit's needs and competency requirements, it would be difficult to address these issues appropriately at the DoD-wide level. However, all of these programs must be consistent with the merit system principles. DoD will provide further guidance in implementing issuances regarding increases resulting from the acquisition of skills and competencies for employees in developmental positions.

Commenters questioned whether entry/developmental pay increases will come out of the performance pay pool. The Department will address the financial management of pay pools in financial policies.

Section 9901.351—Setting an Employee's Starting Pay

Section 9901.351 of the proposed regulations provides for DoD to set the starting rate of pay for individuals who are newly appointed or reappointed to the Federal service anywhere within the assigned pay band, subject to DoD implementing issuances. Some commenters expressed concern over the lack of specificity in this section and questioned what criteria will be used in setting pay for new employees. Other commenters expressed the belief that it is unfair to offer new employees higher salaries than current employees.

We have not changed the regulation in response to these comments. The Department needs maximum flexibility in setting starting rates of pay to be competitive when recruiting new talent. Appropriate parameters will be described in implementing issuances.

Commenters requested clarification on the meaning of the terms ''newly appointed'' and ''reappointed'' and whether this section will be used to set pay for employees of other agencies who are ''newly appointed'' to an NSPS position. A commenter stated that any Government employee entering into the NSPS pay system should receive no reduction in basic pay. Except for the pay administration terms defined in § 9901.103, NSPS pay administration terminology and additional guidance as to how pay will be set for individuals moving into NSPS from outside the Federal Government and from other Federal agencies will be addressed in implementing issuances.

A commenter suggested that NSPS incorporate a signing or recruitment bonus authority in § 9901.351 or another section of the regulations. The enabling legislation does not give the Department the authority to waive the recruitment, relocation, or retention incentive authorities in 5 U.S.C. chapter 57. Therefore, these provisions remain applicable to NSPS employees.

Section 9901.352—Setting Pay Upon Reassignment

Section 9901.352(a) provides for DoD to set pay anywhere within the assigned pay band when an employee is reassigned, either voluntarily or involuntarily. Some commenters expressed concern over the lack of specificity in the regulations. Others expressed concern about the opportunity for management to show favoritism in setting pay. Except as discussed in this section of the **SUPPLEMENTARY INFORMATION**, we have not changed the regulation in response to these comments, thereby ensuring the Department has maximum flexibility in setting rates of pay when employees are reassigned from one position to another within a pay band or across comparable pay bands. However, we have clarified that appropriate parameters will be described in implementing issuances.

In response to comments regarding the applicability of the adverse action procedures to certain employees, we have revised § 9901.352(b) to clarify the procedures applicable to employees subject to actions not covered by subpart G.

A number of commenters strongly objected to providing DoD with the authority to reduce pay when an employee is involuntarily reassigned to a comparable band when not as a result of unacceptable performance or conduct. Commenters suggested that this authority could be used to punish employees and could result in significant pay reductions. Commenters asked whether pay retention would apply in such involuntary situations. The Department will address specific parameters and guidance concerning management's authority to set or reduce pay when an employee is involuntarily reassigned, to include defining appropriate circumstances for pay retention consistent with the changes in § 9901.355.

Commenters asked whether adverse action procedures apply to all pay reductions under § 9901.352. Commenters and the labor organizations participating in the meet-and-confer process recommended that § 9901.352(a) be amended to make any reduction in pay subject to adverse action procedures. However, there are situations when reductions in pay would not appropriately be covered by adverse action procedures (e.g., return of an employee to their position of record at the end of a temporary promotion). Therefore, we have not adopted this suggestion.

Other commenters agreed to the 10 percent limit on pay reductions, but were concerned that the adverse action procedures and methods for challenging performance ratings in the NSPS regulations are inadequate. We believe these concerns are appropriately covered in subparts D and G, respectively.

During the meet-and-confer process, participating labor organizations recommended that the language in § 9901.352 specify that the maximum 10 percent reduction will include any annual increase, local market supplement, or other pay increases withheld from the employee but given to employees who are similarly situated and rated above unacceptable. We

believe counting increases not received (e.g., minimum rate range adjustments) as part of the 10 percent reduction limit is inconsistent with the intent of the NSPS pay system.

The labor organizations participating in the meet-and-confer process also recommended deleting the reference to ''conduct'' in § 9901.352(b), and other commenters stated that conduct should not be a basis for pay reductions. We believe we have appropriately addressed the issue of conduct as part of performance in our discussion of the definition of ''performance'' in subpart A.

A commenter asked whether § 9901.352 provides DoD with the authority to increase an employee's pay upon reassignment to a different position in the same pay band. We have revised § 9901.352(a) to clarify that DoD may set pay anywhere within the assigned pay band when an employee is reassigned to a position in the same or comparable pay band. We have also added a new paragraph (c) to § 9901.352 to provide that when an employee completes a temporary reassignment or when an employee's in-service probationary period is terminated, the employee's rate of basic pay will be set at the same rate the employee received prior to the temporary reassignment or placement in the position requiring the in-service probationary period, with appropriate adjustment of the employee's rate of basic pay based on rate range increases or performance payouts that occurred during the time the employee was assigned to the new position.

Section 9901.353—Setting Pay Upon Promotion

Section 9901.353 of the proposed regulations allowed DoD to set pay anywhere within the assigned pay band when an employee is promoted to a position in a higher pay band, subject to DoD's implementing issuances. During the meet-and-confer process, participating labor organizations expressed concern that no parameters were provided on pay setting actions and suggested a pay increase of at least a 6 percent increase over current pay when an employee is promoted under NSPS. Other commenters also expressed strong concerns that the proposed regulations did not guarantee pay increases upon promotion and provided for possible pay reductions.

In response, we have revised the final regulations to provide a general rule establishing a minimum percentage increase of 6 percent for promotions; however, regardless of the minimum percentage, the salary resulting from the promotion cannot be lower than the minimum of the rate range for the applicable pay band and no higher than the maximum of the rate range for the applicable pay band.

Commenters also requested that the regulations clarify what types of movements will be considered ''promotions.'' The Department will provide specific guidance on the types of movements which will be considered ''promotions'' for pay administration purposes under NSPS in implementing issuances.

Section 9901.354—Pay Setting Upon Reduction in Band

Section 9901.354(a) of the proposed regulations allowed DoD to set pay anywhere within the assigned pay band when an employee is reduced in band, either voluntarily or involuntarily, subject to § 9901.354(b). Some commenters expressed concern over the lack of specificity in the regulations. Others expressed concern about the opportunity for management to reduce an employee's pay repeatedly or for any reason. The Department will ensure appropriate parameters are described in implementing issuances. We have not changed § 9901.354(a) to provide more specificity. However, in response to comments requesting clarification, we have amended paragraph (a) to state that DoD may set pay anywhere within the assigned pay band subject to § 9901.354(b) and (c).

Some commenters objected to pay reductions of any amount upon reduction in band. Others felt that the 10 percent limit on pay reductions under § 9901.354(b) is too high. Some commenters agreed to the 10 percent limit, but were concerned that the adverse action procedures and methods for challenging performance ratings in the NSPS regulations are inadequate. Other commenters stated that conduct should not be a basis for pay reductions or reductions in band. We have not revised the regulations in response to these comments. We believe that allowing for reductions in pay within defined limits for unacceptable performance or conduct is an essential feature of a performance-based pay system. Consistent with NSPS as a performance-based system, the Department will address in implementing issuances the parameters and guidance covering circumstances which could lead to a reduction in pay as a result of a reduction in band and the appropriate percentage of the reduction.

During the meet-and-confer process, participating labor organizations recommended that the language in section § 9901.354(b) specify that the maximum 10 percent reduction will include any annual increase, local market supplement, or other pay increases withheld from the employee but given to employees who are similarly situated and rated above unacceptable. We believe counting increases not received (e.g., minimum rate range adjustments) as part of the 10 percent reduction limit is inconsistent with the intent of the NSPS pay system.

In response to comments regarding the applicability of the adverse action procedures to certain employees, we have revised § 9901.354(b) to clarify the procedures applicable to employees subject to actions not covered by subpart G.

Section 9901.354(c) of the proposed regulations provided that if an employee is reduced in band involuntarily, but not through adverse action procedures (e.g., termination of a temporary promotion or failure to successfully complete a supervisory probationary period), DoD would limit any reduction in pay in accordance with implementing issuances. During the meet-and-confer process, participating labor organizations recommended that we amend this section to ensure an employee reduced in band involuntarily, but not through adverse action procedures, will have his or her pay reduced to not less than the amount the employee would have received if he or she had not been temporarily promoted or assigned to a supervisory position. Other commenters raised similar concerns. Based on these recommendations, we have revised this section to state that such an employee's pay will be set at the level the employee would have received if he or she had not been temporarily promoted or assigned to a supervisory or other position requiring an in-service probationary period, including rate range and performance payout increases that occurred during the intervening period. We have also clarified that any resulting reduction in pay is not considered an adverse action under subpart G (or similar authority) consistent with the provision in § 9901.356(e) of the proposed regulations.

Section 9901.355—Pay Retention

Section 9901.355 of the proposed regulations provided that DoD would issue implementing issuances regarding pay retention. This section also provided that pay retention would be based on the employee's rate of basic pay in effect immediately before the action that would otherwise reduce the employee's rate and that a retained rate

will be compared to the range of rates of basic pay applicable to the employee's position. During the meet-and-confer process, participating labor organizations recommended that we address the lack of specifics on pay retention. Other commenters also suggested that the regulations provide more detail on pay retention entitlements.

Accordingly, we have revised the language in this section to clarify that (1) employees will receive pay retention for a 2-year period under appropriate circumstances, e.g., reduction in force or reclassification; (2) employees on pay retention may receive performance payouts as bonuses, not salary adjustments; (3) employees on pay retention will not receive minimum rate range adjustments; (4) employees on pay retention will receive local market supplements; and (5) local market supplements are not considered part of basic pay in applying pay retention. In addition, as previously discussed, we have revised § 9901.342(d)(6) to clarify how performance bonus payouts will be computed for an employee receiving a retained rate. (See *Section 9901.342—Performance Pay Increases* for additional information.)

Commenters questioned whether grade or ''band'' retention will apply under the NSPS pay system. The NSPS pay system does not include a grade or ''band'' retention authority.

Section 9901.356—Miscellaneous

Section 9901.356 provides miscellaneous pay administration rules for the NSPS pay system. Commenters were confused by § 9901.356(a) and asked whether an employee's pay can be less than the minimum rate of the pay band. Under the NSPS system, an employee's pay could drop below the minimum rate of the pay band if the minimum rate of the rate range for that band exceeds the employee's salary. This could occur if the employee has an unacceptable performance rating and does not receive a rate range adjustment under § 9901.323. However, this situation does not require the employee to be placed in a lower pay band. The employee's pay band is determined by work assignment.

Commenters asked whether the special pay increase under § 9901.356(d), which DoD may pay to an NSPS employee prior to moving to a GS position, will be paid to employees moving to GS positions in DoD and other agencies. DoD may apply § 9901.356(d) to an NSPS employee moving to a GS position within or outside of DoD.

During the meet-and-confer process, the participating labor organizations recommended that § 9901.356(e) be revised to require DoD to set an employee's pay upon expiration of a temporary reassignment or promotion under § 9901.354(c) and not be subject to separate implementing issuances. Other commenters asked whether §§ 9901.356(e) and 9901.354(c), which both cover pay-setting upon expiration of temporary promotions, are consistent. Other commenters requested a definition of ''temporary reassignment'' and expressed concerns that § 9901.356(e) provided a loophole DoD could use to reduce an employee's pay without following adverse action procedures. The term ''reassignment'' is defined in § 9901.103 of subpart A. The specific conditions and considerations of pay setting upon reassignment are more appropriately addressed in implementing issuances. However, as previously discussed, we have revised §§ 9901.352 and 9901.354 to clarify that upon completion of a temporary reassignment or temporary promotion, an employee's rate of basic pay will be set at the same rate the employee received prior to a temporary reassignment or temporary promotion. In addition, we do not believe §§ 9901.356(e) and 9901.354(c) were inconsistent. However, to further clarify, we have moved the provision in § 9901.356(e) of the proposed regulations to new §§ 9901.352(c) and 9901.354(c) to provide that any reductions in pay at the conclusion of a temporary promotion or temporary reassignment would not be covered by adverse action procedures. We have removed § 9901.356(e) from the final regulations because it is no longer necessary. (See *Section 9901.352—Setting Pay Upon Reassignment* and *Section 9901.354—Setting Pay Upon Reduction in Band* in this **SUPPLEMENTARY INFORMATION** for additional information.)

During the meet-and-confer process, participating labor organizations also recommended adding a new paragraph (f) to § 9901.356 to address determinations of ratings of record for employees who perform activities during duty time that are not DoD assignments (e.g., EEO counselors and union representatives) for the purpose of performance payouts and RIF retention. This issue will be addressed in implementing issuances.

Section 9901.361—General

Section 9901.361 provides DoD with the authority to issue implementing issuances establishing premium pay provisions. A number of commenters strongly objected to providing DoD such authority. They did not understand why title 5 premium pay provisions need to be waived and were concerned that DoD will reduce premium pay entitlements to save money. Commenters expressed concerns about the lack of specificity in this section and that this section provides DoD with too much authority to affect employees' pay. Other commenters questioned whether specific types of premium pay, such as environmental differential pay and compensatory time off for travel, would be waived under this authority. During the meet-and-confer process, participating labor organizations recommended adding a paragraph to this section providing that premium pay under NSPS will not be less than would have been applicable if employees had not been converted to NSPS. Other commenters made similar recommendations.

We believe the ability to modify premium pay in response to current and future Departmental needs is a critical feature of NSPS. This flexibility facilitates the Department's ability to accomplish its diverse missions. For example, it is essential that the Department have the ability to fully compensate deployed employees and employees supporting surge requirements; the ability to equitably compensate employees performing overtime work; and the ability to make premium pay provisions fair, equitable, understandable, and credible to our employees. Specific issues regarding premium pay, including payments made under subchapter V of chapter 55 as well as those made in lieu of subchapter V of chapter 55, will be addressed in implementing issuances. Implementing issuances are subject to continuing collaboration. Also, under § 9901.105, any policies regarding premium pay that differ from those that exist in Governmentwide regulations must be coordinated with OPM. We have revised § 9901.361(a) to clarify that these regulations are the source of the authority to waive the premium pay provisions, consistent with § 9901.303(a)(2).

Commenters stated that law enforcement officer availability pay should not be waived for NSPS law enforcement officers. Commenters noted that OPM has stated that Federal law enforcement officers should have consistency in terms of premium pay entitlements. Other commenters questioned why firefighter pay under 5 U.S.C. 5545b is not waivable, if DoD can waive availability pay.

Under 5 U.S.C. 9902(d)(2), DoD may waive premium pay provisions under 5

U.S.C. chapter 55, subchapter V, including availability pay for criminal investigators under 5 U.S.C. 5545a, but is prohibited from waiving pay for firefighters under 5 U.S.C. 5545b. DoD must coordinate with OPM prior to establishing policies regarding premium pay for law enforcement officers that differ from those in Governmentwide regulations. (See § 9901.105.)

Commenters also questioned whether this section provides DoD with the authority to change FLSA overtime pay. As previously discussed, since the FLSA authority is outside the waivable title 5 chapters, these regulations do not affect FLSA overtime pay entitlements. (See *Section 9901.104—Scope of Authority* for additional information.)

Section 9901.371—General

Commenters requested that §§ 9901.371 through 9901.373, regarding the conversion of employees into the NSPS pay system, be revised to provide detailed information on converting employees in demonstration projects and alternative personnel systems to NSPS.

The Department recognizes the desire that the regulations provide greater specificity. However, employees in organizations currently covered by demonstration projects and alternative personnel systems have the same rights and protections as other employees upon their conversion to the NSPS pay system. Sections 9901.372 and 9901.373 have been revised to clarify such protections. (See *Section 9901.372—Creating Initial Pay Ranges* and *Section 9901.373—Conversion of Employees to the NSPS Pay System*.)

Commenters asked whether §§ 9901.371 through 9901.373 are applicable to employees coming into NSPS after the initial spiral for an organization. Other commenters asked whether the pay-setting rules in §§ 9901.351, 9901.352, and 9901.353 will apply to such employees. Another commenter stated that the language in § 9901.371(a), which excludes employees ''reassigned or transferred'' to the NSPS system, is not adequate, since employees could move into such positions by another pay action.

These sections apply only to employees in an organization at the time the organization undergoes its conversion to the NSPS pay system. They do not apply to an employee who moves into an organization after the organization has been converted to the NSPS pay system. We have revised § 9901.371(a) by replacing ''are reassigned or transferred'' with ''move'' to clarify that the conversion provisions exclude employees who move from a non-NSPS position to a position already covered by NSPS under any circumstances. The Department will issue implementing issuances detailing the conversion procedure for employees entering an organization after its conversion to the NSPS pay system.

Commenters requested a 3-year moratorium on any action that would reduce an employee's pay after the employee's conversion to the NSPS pay system. The Department is not changing the conversion rules to provide a moratorium on such actions. The Department guarantees employees will convert into the NSPS pay system without a reduction in pay. However, subsequent employee pay actions will be based on pay-for-performance criteria.

Section 9901.372—Creating Initial Pay Ranges

Section 9901.372 provides DoD with the authority to set initial pay band rate ranges under subpart C. Some commenters supported the use of the General Schedule salary structure as the baseline for moving an employee into a new band to allay concerns that pay rates will be reduced. Other commenters recommended that the regulations guarantee that the initial rate ranges be at least equal to the employees' former rate ranges. During the meet-and-confer process, the participating labor organizations recommended that § 9901.372 be amended to require initial pay band rate ranges to link to the ranges that applied to employees in their former pay system. The Department has not changed the regulatory language in this area but will consider these comments when developing implementing issuances.

In response to comments regarding the applicability of the conversion rules to employees converted to the NSPS pay system from demonstration projects and alternative pay systems, we have revised § 9901.372 to provide that initial pay band ranges may link to the ranges that apply to employees in their previously applicable pay system, taking into account any applicable locality payment, special rate supplement, local market supplement, or ''similar payment under other legal authority.''

Section 9901.373—Conversion of Employees to the NSPS Pay System

Section 9901.373 provides the rules for converting employees into the NSPS pay system when that system is initially applied to a category of employees. Section 9901.373(a) provides that DoD will convert employees into the system without a reduction in their rate of pay.

In response to comments regarding the applicability of the conversion rules to employees converted to the NSPS pay system from demonstration projects and alternative pay systems, we have revised § 9901.373(a) to provide that DoD will convert employees to the system without a reduction in their rate of pay, including any applicable locality payment, special rate supplement, local market supplement, or ''similar payment under other legal authority.'' Also, consistent with other changes in subpart C, we have revised § 9901.373(b) to address other adverse action authorities for employees subject to actions not covered by subpart G.

Commenters stated that employees on temporary promotions will lose money at conversion under § 9901.373(d). Others stated that all employees on temporary promotions will be downgraded upon conversion into NSPS. Other commenters recommended that the regulations provide DoD components the option to terminate temporary promotions prior to conversion and repromote the employee immediately after conversion.

Under § 9901.372(d) employees will be returned to their permanent position upon conversion to the NSPS pay system. However, organizations may simultaneously reassign or repromote an employee to the position held prior to conversion. The Department will issue implementing issuances detailing the pay-setting procedures for employees who are returned to a temporary position.

Many commenters requested details on whether employees would receive a pay increase for the time spent towards their next within-grade increase upon conversion into the system and recommended that the regulations provide explicitly for such increases. During the meet-and-confer process, the participating labor organizations also recommended that the regulations require such increases to be paid upon conversion. Other commenters stated that § 9901.373(e) is confusing, since it implies the Secretary of Defense could use this authority to reduce pay. Still others asked whether DoD will pay such increases to employees converting into NSPS from demonstration projects or alternative pay systems.

During the conversion to NSPS, the Department will provide a prorated pay increase based on the amount of service a GS or prevailing rate employee performing at an acceptable level has completed towards the next within-grade increase (WGI). Section 9901.373(e) is the authority under which the Department will provide the prorated pay increase—commonly

referred to as a ''WGI buy-in.'' We have revised this paragraph to provide DoD with the discretion to pay conversion increases to employees in other pay systems, subject to DoD implementing issuances.

Some other commenters asked whether employees on a special rate would receive a pay increase for the time spent towards their next within-grade increase and others asked whether such a pay increase would be calculated using the applicable special rate table or the General Schedule base rate.

During the conversion to NSPS, the Department will provide a prorated pay increase to employees on a special rate. The increase will use the same formula for determining the prorated pay increase that will be used for employees on regular General Schedule rates.

Commenters requested details on whether employees would receive a pay increase for the time spent in grade towards a career-ladder promotion. During the meet-and-confer process, the participating labor organizations recommended that the regulations require that such increases be paid upon conversion. A number of other commenters made similar recommendations.

The Department does not consider prospective career-ladder promotions to be time-based. All promotions, even career-ladder promotions, involve the assignment of higher-graded duties to an employee. After employees have converted to NSPS, the system will provide sufficient capability to recognize the progression of trainees through pay increases under § 9901.345.

Commenters asked how employees on leave without pay (LWOP) and on other absences, such as suspensions, long-term training assignments, and Intergovernmental Personnel Act assignments, will be converted into the NSPS pay system. Other commenters asked how employees on grade and pay retention will convert into the NSPS system.

Employees are placed in a LWOP status for a number of different reasons. Each circumstance affects the conversion rules applicable to an employee. In recognition of this, the Department will issue implementing issuances governing the conversion procedures for employees in a LWOP status. Implementing issuances also will address the conversion of (1) employees absent for various other reasons and (2) employees on grade or pay retention.

Commenters stated that employees outside CONUS could be negatively affected when they return to CONUS positions in NSPS because, unlike CONUS employees whose conversion will be based on base pay plus locality pay, employees outside CONUS do not have a locality pay rate which will result in a lower pay rate at the time of conversion.

Under the current title 5 provisions, employees returning to CONUS positions receive the applicable locality rate. Under NSPS provisions, employees returning to CONUS positions will receive the local market supplement applicable to their new position and geographic location. We anticipate that local market supplements will initially be set equal to the applicable locality pay rate.

Commenters asked for assurances regarding how pay will be set if employees leave NSPS and return to GS positions. Upon movement to a GS position, pay for NSPS employees will be set under the GS pay-setting rules at 5 CFR part 531, subpart B, subject to the gaining organization's pay-setting policies.

Subpart D—Performance Management

General Comments

A general concern expressed by many commenters, as well as labor organizations during the meet-and-confer process, was a lack of specificity in the proposed regulations. Many commenters wanted to see detailed requirements and procedures for how the classification, pay, and performance systems would operate. The regulations set forth the general requirements and establish a framework for the development of more specific systems through a series of implementing issuances. For example, the performance management implementing issuances will address the specific processes and practices that will be used within the Department and its components regarding such matters as rating levels, core competencies, standard performance factors, and progress reviews.

By far the greatest concern expressed by commenters regarding the proposed performance management regulations involved the perception of fairness of the new system. This concern was expressed in a variety of ways, including the following:

- Potential for rater subjectivity, consistency of raters, rater favoritism, rater bias, and potential for ''cronyism.''
- Equality of treatment across agency lines, i.e., employees performing the same amount and quality of work in one DoD agency could receive a lower performance-based pay increase than a counterpart in another DoD organization.
- Concern that employees with the same performance rating could receive two different amounts of money or that one could receive a pay increase and another a bonus.

Directly related to the concern for fairness was the concern that the new system provide adequate performance management safeguards and the recommendation that the new system provide adequate checks and balances over the exercise of discretionary authority of supervisors and managers to affect the pay of employees through performance. Some commenters assumed that the accountability measures provided in the proposed regulations were the only safeguards to be included in NSPS and therefore found the proposed regulations insufficient. Some understood that the implementing issuances would further define these tools, which could include the use of an oversight panel, but preferred that they be specified in the enabling regulations. Others simply wanted to emphasize the importance of safeguards and checks and balances in a pay-for-performance system.

The regulations make every attempt to ensure that the NSPS performance management system will be fair. First, the regulations adopt guiding principles based on the performance management system criteria Congress has recently enacted with respect to chapters 47, 54, and 99 of title 5, United States Code. These principles require any performance management system(s) established by DoD to be fair, credible, and transparent and to adhere to the merit system principles found in 5 U.S.C. 2301. Second, the Department is committed to further developing these principles as it designs its performance management system through its implementing issuances. Section 9901.401 requires DoD to establish ''effective safeguards to ensure that the management of the system is fair and equitable and based on employee performance,'' and § 9901.405(c) specifies supervisory and managerial responsibilities for effective performance management.

Many commenters recognized that conversion to the NSPS would require new skills, knowledge, and a change in organizational culture. These commenters overwhelmingly emphasized the need for DoD to include proper training programs for employees, but especially supervisors and managers, since they will carry the primary responsibility for administering a pay-for-performance system. The commenters further acknowledged the need for NSPS training programs to be properly funded and appeared to draw

a nexus between fair administration of performance management and pay and the level of supervisory competency and training. A significant number of commenters were also concerned about the participation of military supervisors in the administration of civilian performance management and pay under NSPS. These commenters were concerned about the potential effect military supervisors unfamiliar with civilian performance management and pay-for-performance processes might have on employees' pay and retention. They also raised concerns about the effect of frequent military assignment rotations on the familiarity of supervisors with the civilian subordinates' work and performance.

DoD is committed to extensive training for managers, supervisors, and employees so that they understand the requirements of the performance management system. Further, DoD is committed to the training of managers and supervisors, including military members, and will focus that training on how to establish and communicate performance expectations, how to assess employee performance, and how to appropriately translate that assessment into pay adjustments. Finally, the Department is committed to creating a performance culture in DoD that sustains a high performance organization.

Commenters also suggested that there should be a formal evaluation of any performance management system. Section 9901.108 of both the proposed and final regulations includes the requirement for the establishment of procedures for evaluating regulations and the implementation of any regulations established under 5 U.S.C. 9902. Therefore, no change was made in subpart D to address this comment because the performance management system is covered by the overall evaluation requirement.

In addition, during the meet-and-confer process, participating labor organizations suggested including a requirement for the Government Accountability Office (GAO) to conduct an annual review of the performance management system, including pay-for-performance provisions and payouts, and make a report to Congress. Congress has stated that it will carefully monitor the development and implementation of the NSPS. Furthermore, it would not be appropriate for DoD and OPM to mandate that GAO prepare an annual report to Congress.

Most of the suggestions discussed in the general comments section, as well as many others that suggest specific practices or processes, by their nature relate to the operation of the performance management system DoD will establish through implementing issuances. As such, they are not specifically addressed by these enabling regulations. These comments will be taken into account by DoD as it develops a more detailed picture of the NSPS performance management system through implementing issuances.

Other Comments on Specific Sections of Subpart D

Section 9901.401—Purpose

Many commenters, including participating labor organizations during the meet-and-confer process, questioned the need to revise current performance management rules, stating that what NSPS proposes under the new performance management system could be done under the current rules, with additional training for management and staff, or through minor modifications of 5 U.S.C. chapter 43 rather than the redesign of the entire performance management system. Others recommended putting specific provisions from chapter 43 into the NSPS performance management requirements.

Section 9901.401 provides for the establishment of a DoD performance management system and sets out the guiding principles that govern it. These guiding principles are based on the criteria Congress recently enacted with respect to chapter 99 of title 5, U.S. Code. The regulations are based on a clear mandate from Congress to strengthen the performance management system to support a high performance culture and serve as the basis for pay decisions, as explained in the Case for Action.

Section 9901.402—Coverage

Section 9901.402 of the proposed regulations clarified which categories of employees are eligible for coverage under subpart D—Performance Management. Commenters recommended that this subpart be revised to exclude employees whose pay is set by other statute (*e.g.*, overseas teachers). Other commenters raised questions concerning whether certain populations of employees would be covered by this subpart. Section 9902(a) of title 5, U.S. Code, provides authority for the Secretary of Defense to make such determinations upon establishment of the NSPS or after NSPS is established by regulation. Therefore, it is not necessary to determine inclusion/ exclusion of each unique population within DoD in the enabling regulations. Consequently, no change was made to this section.

Section 9901.403—Waivers

Section 9901.403 specifies that employee coverage under this subpart results in the waiver of the provisions of 5 U.S.C. chapter 43 with regard to that employee or category of employees. Many employees and labor organizations strongly recommended that we continue to manage performance subject to 5 U.S.C. chapter 43. However, for the reasons explained in the Pay for Performance discussion under Part VII, Major Issues, of this **SUPPLEMENTARY INFORMATION**, we have concluded that the waiver of chapter 43 is appropriate. No change has been made in this section.

Section 9901.404—Definitions

Commenters asked for additional explanation of terms used in the proposed regulations or that we define additional terms. We have addressed some of these terms in the **SUPPLEMENTARY INFORMATION** regarding subpart A of the regulations, where we have defined common terminology that is used in several subparts of the regulations. Many of the terms are more appropriately left to implementing issuances. However, two of the terms related to this subpart that drew a number of comments are addressed here.

Several commenters expressed concern about the definition of ''unacceptable performance'' in § 9901.103. That definition defines ''unacceptable performance'' as ''the failure to meet one or more performance expectations.'' A few commenters expressed concern that under the proposed definition, performance measures could only define and differentiate ''acceptable'' and ''unacceptable'' performance. Other commenters were concerned that unattainable goals and expectations would be used in conjunction with the proposed definition. In response to these concerns, we have modified the definition of ''unacceptable performance'' found in § 9901.103. The new definition provides that performance expectations may be amplified through work assignments or other instructions, for which the employee is held individually accountable. As part of its implementation strategy, DoD will provide training on setting appropriate performance expectations.

During the meet-and-confer process, the participating labor organizations suggested that the definition of ''performance expectations'' in the

proposed regulations be amended to require such expectations to meet certain characteristics (*e.g.*, objective and observable or verifiable descriptions of manner, quality, quantity, timeliness, and cost effectiveness). Many of the commenters also suggested that this language be modified to require that any performance expectation used in assessment of performance be ''objective and measurable.'' While many of these characteristics are noteworthy, due to the breadth of missions and types of work performed in DoD, such characteristics may not always be applicable to each and every performance expectation. In response to comments that the definition of ''performance expectations'' was too broad, we have revised the definition to explain that expectations are based on (1) the duties, responsibilities, competencies, and objectives associated with an employee's position and (2) the contributions and demonstrated competencies management expects of an employee.

Section 9901.405—Performance Management System Requirements

Section 9901.405 provides for the establishment of a performance management system under NSPS through the use of implementing issuances. This section also establishes the requirements that must be met by the NSPS performance management system.

During the meet-and-confer process, participating labor organizations proposed that the development of the performance management system be accomplished through a three-step process: Continuing collaboration, national consultation, and finally bargaining. Such a cumbersome and inefficient process would inevitably lead to a fragmented and inconsistent implementation of the NSPS. Furthermore, it is inconsistent with the statutory prohibition against expanding the scope of bargaining (5 U.S.C. 9902(m)(7)) and the mandate that the collaborative process established by 5 U.S.C. 9902(f) be the exclusive process for involvement of employee representatives in the planning, development, and implementation of the NSPS HR system. Therefore, this suggestion has not been incorporated into the final regulations, and continuing collaboration in the development of the implementing issuances will be the means for ensuring employee involvement in the design and implementation of the performance management system.

Many commenters had specific ideas and recommendations for the design and operation of performance management systems. We will address some of these concerns here, and others will be addressed more appropriately as DoD develops the implementing issuances. For example, a few commenters recommended more overtly embedding the concept of contribution in the enabling regulations. However, we find that the concept of contribution already is clearly presented in the enabling regulations, including a definition of the term in subpart A.

Other commenters suggested providing system transparency by requiring the agency to publish the performance ratings and payouts for all employees. We agree with the concept of incorporating additional transparency in the performance management system, but not at the expense of employee confidentiality and privacy. There are many other effective methods for providing transparency that do not require disclosure of individual performance ratings. Many of these methods are practiced today in DoD's pay-for-performance demonstration projects. While protecting individual identifying information, organizations often publish summary results and aggregate data such as average ratings and payouts within pay pools and career paths. Additionally, organizations often provide employees with comparative compensation data in the form of scatter grams or similar graphic representations of payout statistics, in which data points are anonymous.

Several commenters proposed tying performance ratings to customer satisfaction and/or the use of 360-degree ratings. These suggestions are related to the operation of the performance management system, the details of which DoD will establish through implementing issuances. While we agree that the use of customer input and/or 360 degree ratings should be tools available to DoD Components in the implementation of this subpart, these tools are not appropriate for application to all types of work and work environments. Therefore, we did not adopt the suggestion to require their use Department-wide.

During the meet-and-confer process, the participating labor organizations recommended that appraisals be required once a year. Management agreed with this recommendation, and this section has been modified to include the requirement that performance appraisals occur at least annually.

Section 9901.406—Setting and Communicating Performance Expectations

Section 9901.406 provides the requirements and guidelines for communicating with employees regarding their performance through the use of ''performance expectations.''

Regarding the requirements in § 9901.406(a), some commenters said it would be difficult to link individual performance to the Department's strategic objectives, some thought the linkage already exists in the current system, and some recommended that DoD implementing issuances amplify how this be done. We agree that additional guidance will be helpful and that this degree of specificity is best accomplished through DoD implementing issuances and/or DoD Component regulations and guidance. Therefore, no changes were made in response to these comments.

We received comments concerning the content of § 9901.406(b), which also was a topic of discussion during the meet-and-confer process. A majority of commenters objected to the inclusion of ''professionalism and standards of appropriate conduct and behavior, such as civility and respect for others' as indicators of performance. Most of these commenters believed assessment of these traits would lead to arbitrary and subjective determinations. Others thought this provision would be a tool for advancing favoritism or retaliation in the workforce. Still others interpreted this requirement to apply to nonsupervisory employees only and recommended the application of this requirement to supervisors and managers, as well. We have addressed these issues in our discussion of the definition of ''performance'' in subpart A. These requirements apply equally to all employees, including supervisors and managers.

During the meet-and-confer process, the participating labor organizations recommended changes to specify that performance expectations are appropriately and clearly communicated to employees. Management shared these concerns and agreed that the basic performance expectations should be provided to employees in writing. We have revised this section accordingly.

Other comments expressed concern that employees could be rated against expectations that had not been communicated or that employees would be rated against continually varying and changing expectations. We believe the regulations sufficiently address concerns about communication of

performance expectations. This section of the proposed regulations clearly stated the requirement that performance expectations be communicated to employees prior to holding the employee accountable for them. No changes were made in the regulations to address concerns about management flexibility to change performance expectations. Such flexibility is necessary to enable DoD to respond to changes in organizational mission and priorities.

Labor organizations participating in the meet-and-confer process, as well as many commenters, raised concerns regarding supervisory and managerial accountability. Specifically, they questioned how this would be accomplished, since many believe supervisors and managers are not held accountable now. Section 9901.406(c) expressly states that supervisors' and managers' performance expectations will include ''assessment and measurements'' of how well they complete their performance management responsibilities. DoD will provide training on the appropriate competencies to ensure that supervisors and managers are prepared to do this. In addition, supervisors' and managers' ratings of record will be based, in part, on how well they perform this important function. Ultimately, pay decisions for supervisors and managers will be affected by their performance of this function.

Section 9901.406(d) of the proposed regulations provides examples of a variety of forms performance expectations could take. Many commenters made suggestions regarding the purpose and content of performance expectations. Some of these commenters recommended the establishment of standard performance elements in order to promote consistency across organizational lines. Other commenters recommended the use of performance standards tied to each individual's area of responsibility. The performance management system envisioned by the Department will include both standard performance elements and individual goals and objectives. These elements of the system will be addressed in the DoD implementing issuances.

In addition, individual commenters and participating labor organizations alike expressed concern that the explanation of performance expectations was too broad. In response, a new paragraph has been added to § 9901.406 to explain that performance expectations may be amplified through particular work assignments or other instructions, which need not be in writing, and 9901.406(d)(5), which allowed for the use of any other means as long as it would be clear to a reasonable person, has been deleted.

Several commenters objected to the language in § 9901.406(f) limiting employee involvement in developing performance expectations to ''insofar as practicable.'' In some cases, individual employees may not be directly involved in the development of particular performance expectations because the performance expectations were developed through a group endeavor, or the same expectations might be applied to an entire group of employees where a smaller group of employees was involved in their initial development. Some commenters also objected to reserving final decisions regarding performance expectations to the sole and exclusive discretion of management. This is no different than the current practice regarding performance elements and standards, and both performance elements/standards and performance expectations are part of assigning work, which is a management right.

Section 9901.407—Monitoring Performance and Providing Feedback

Section 9901.407 establishes the basic responsibility for supervisors to monitor employee and organizational performance and inform employees of their progress in meeting their performance expectations. This section received two primary comments:

(1) The recommendation that the regulation require more than one progress review per year and (2) the concern that interim performance or progress reviews would not occur despite regulatory language. We agree that multiple interim performance reviews and/or interim feedback are appropriate for many types of work and positions. However, since this is not true of all types of work, the enabling regulation will continue to specify a minimum interim performance review requirement of at least once during each appraisal period. We also made no change in response to comments indicating that regulations alone would not result in conducting interim performance reviews. We believe the proposed regulation provides sufficient language in subpart D to hold supervisors and managers accountable for effectively managing the performance of employees. (See our previous discussion regarding § 9901.406(c).)

Section 9901.408—Developing Performance and Addressing Poor Performance

Section 9901.408 addresses two aspects of developing or improving performance: The continual improvement that is part of a high-performance culture and the remedial improvement that addresses poor performance.

Many commenters expressed concern that without the protections provided by mandatory improvement periods, management would be overly harsh in adverse actions related to poor performance. Similarly, during the meet-and-confer process and through written comments, participating labor organizations asked that employees be provided a reasonable opportunity to improve performance before an adverse action is proposed or initiated, except in the most extreme case of a performance deficiency that endangers national security or the safety of personnel. The proposed regulations provided for an improvement period as one of several options available to address or correct unacceptable performance prior to taking an adverse action. We continue to believe an improvement period should be an option under the new system, but not a requirement as it is now under chapter 43 of title 5, U.S. Code. Therefore, we made no changes as a result of these recommendations. An agency may now take a performance action under chapter 75 without affording an improvement period. Additionally, as specified in subpart H, employees continue to have the right to appeal adverse actions.

At least two commenters recommended modification of the language in § 9901.408(c) to acknowledge adverse action appeal procedures for groups of employees not covered by subpart H of the NSPS regulations. In response to this recommendation, we have revised this section to reference appropriate appeal procedures for employees not covered by actions subject to subpart H.

Section 9901.409—Rating and Rewarding Performance

Section 9901.409 establishes the requirements regarding rating and rewarding employee performance, including the use of a multi-level rating system, the purposes for which ratings may be issued, and procedures for challenging a rating of record.

Section 9901.409(a) received many comments indicating that DoD was taking a step backward in moving from, in some cases, a pass/fail performance management systems to a multi-level

rating system. A few comments indicated that the new performance management system should require more than three rating levels. Since meaningful performance distinctions are an essential requirement in a pay-for-performance system, language requiring a multi-level rating system was retained. While the regulations specify minimum requirements, the details of the performance management system will be developed through the implementing issuances. Such details would include specifying the number of rating levels and providing descriptions of the different levels of performance.

In regard to § 9901.409(b), some commenters were happy to see their performance rating of record used as a basis for pay. Most commenters, however, did not agree with the linkage of pay to performance and indicated their preference for pay based on longevity. As stated under the Pay for Performance portion in the Major Issues Section of the **SUPPLEMENTARY INFORMATION**, the enabling statute requires that the Department establish a ''pay-for-performance'' system that better links individual pay to performance. (See 5 U.S.C. 9902(b)(6)(I).) Also, we believe Congress and the American people want to see DoD's employees compensated based on performance rather than longevity. Therefore, we retained the language establishing the rating of record as a basis for pay determinations.

In addition, commenters expressed concern that the authority to issue additional ratings may be vulnerable to abuse, especially during RIF. The authority to issue additional ratings of record enables management to issue new ratings of record to recognize significant deterioration or improvement in performance since the previous rating of record was issued. DoD will include appropriate safeguards in its implementing issuances.

Similarly, while some commenters were happy that performance would be used as a basis for determining reduction in force (RIF) standing, others thought performance should be given equal weight with seniority. However, most commenters thought seniority should continue to determine retention standing in the event of a RIF. Length of service does play a role. However, we believe that it is essential that performance play a larger role in retention so no change was made in this section of the regulations.

We received a number of comments concerning § 9901.409(g). The majority of commenters thought the reconsideration process to challenge performance ratings should include an opportunity for third-party review. This issue was also raised during the meet-and-confer process with participating labor organizations. These organizations indicated their strong belief and desire that employees must have access to a negotiated grievance procedure and binding arbitration for the reconsideration process to be credible. In response to these concerns, § 9901.409(h) was added to enable bargaining unit employees to choose to use either an administrative reconsideration process under this subpart or a negotiated grievance process under § 9901.922(h), but not both.

In addition to concerns regarding the ability to grieve a rating of record, many commenters also expressed a similar concern regarding the ability to have a pay determination reconsidered. This was also a topic of discussion during the meet-and-confer process. We have made no changes in the final regulations in this regard. However, we recognize that changing a rating of record as the result of a reconsideration could lead to a conforming change in the employee's payout.

A few commenters recommended modification of § 9901.409(i) to recognize alternative reduction in force procedures for employee groups not covered by subpart F of these regulations. We agree and have modified this section accordingly.

Subpart E—Staffing and Employment

General Comments

As previously addressed in the subpart A supplemental information, commenters expressed concerns about the lack of specificity in subpart E of the proposed regulations on external recruitment and internal placement. Although some commenters found the staffing and employment concepts to be simple and supported our plan, many commenters felt the proposed regulations were too vague. They did not support issuing detailed guidance in internal implementing issuances because that process does not adequately allow for public comment.

Because of the lack of specificity, commenters recommended a number of different amendments to subpart E of the regulations to provide detailed criteria and conditions for addressing staffing and employment issues involving external hiring and internal placement. The commenters recommended the regulations:

- Specify the time limits for probationary periods;
- Limit probationary periods to the initial hire and the first supervisory appointment only;
- Include information on crediting time toward completion of a probationary period and appeal rights;
- List the series that will be covered by direct hire authority and specify who may determine which series will be added or deleted;
- Clarify whether time-in-grade still applies;
- Specify what happens to career-conditional employees when they move into NSPS;
- Identify the contemporary hiring practices that are acceptable, *e.g.*, using headhunters, signing bonuses, newspaper ads; and
- Address how NSPS will streamline the lengthy process of rating and ranking.

We understand the desire for the regulations to provide more specificity and assurances regarding NSPS staffing and employment. However, the regulations must also provide DoD with sufficient flexibility to design an agile system to attract high quality employees and the ability to place employees in a manner consistent with mission requirements and strategic human capital needs. These suggestions and requests for more detailed information will be considered in developing the implementing issuances.

Many commenters stated current hiring flexibilities were sufficient and felt the Department had not demonstrated why changes were needed in the staffing and employment areas or how our proposals would result in a less cumbersome or fairer hiring process. Still others indicated they saw little in our proposal that would substantially alter or improve management's ability to hire or move employees as mission-related requirements dictate. We disagree. For example, in § 9901.511(c), we have removed a time-consuming step in establishing a direct hire authority by providing DoD with the authority to make severe shortage and critical need determinations without approval by OPM. In addition, § 9901.515(a) permits limiting consideration under competitive examining to highly qualified applicants in a commuting area instead of having to consider potentially thousands of applications from across the country. Also, § 9901.511(d) provides DoD the capability to convert employees on time-limited appointments, which may be necessary because of funding or organizational issues, to career appointments, if such a possibility is stated in the vacancy announcement so that interested persons may apply for

the potential conversion opportunity. We believe these additional flexibilities will permit DoD to meet workforce and organizational goals in a much more timely fashion.

Numerous commenters also believed that management does not currently fully utilize existing hiring flexibilities. The Department will continue to provide training on existing hiring flexibilities, and we are confident that the extensive training planned for NSPS implementation will educate managers and employees about the new flexibilities NSPS will offer. Once managers are aware of these flexibilities, we believe they will utilize them to more effectively hire and place employees where their skills and knowledge will be most useful to the Department.

Several comments pointed out our proposals do not address the issue of lengthy background security checks or other impediments to hiring, such as funding problems and hiring freezes. While we understand that the administrative processes involved in completing background security investigations and resolving funding issues may play a significant role in the speed of the hiring process, they are outside the scope of the enabling legislation.

Commenters, including labor organizations participating in the meet-and-confer process, were concerned about a perceived threat of involuntary deployment, particularly to hazardous overseas locations. While they understand the requirement to support our military members in every way, some believe that NSPS is an attempt to institute a ''backdoor draft.'' Commenters also stressed that management should not have the ability to reassign or detail employees to perform similar or different duties at a moment's notice. Our need to institute a flexible system with the ability to deploy the Department's personnel in a manner consistent with mission requirements does not mean that employees will be reassigned in a capricious, arbitrary manner or totally without warning. Under current law, management already has authority to assign work to be performed and to accomplish the mission of the Department, including the authority to reassign or detail employees. We intend to continue to treat our employees in a fair, credible, and respectful manner. We will develop the processes and procedures under NSPS that will help us to achieve this.

Several commenters, including labor organizations participating in the meet-and-confer process, raised questions about priority placement programs and how they will work under NSPS. Commenters inquired as to how pay-banded positions would be dealt with, how hiring flexibilities will impact the DoD Priority Placement Program, and whether or not the Governmentwide priority placement mechanism, the Reemployment Priority List, might be eliminated because it is inconsistent with a performance-based human resources system. The Department has a longstanding commitment to protect and assist employees who have been affected by its workforce shaping initiatives, and we will continue to honor that responsibility. DoD's Priority Placement Program will be modified to incorporate NSPS features, just as it has previously been modified to accommodate other changes throughout the years.

Many commenters referred to the requirement that DoD staffing and employment regulations be designed in a transparent and credible manner that involves employees and employee representatives. We agree that employee representatives should be provided an opportunity to participate in the development of implementing issuances. This issue is specifically addressed in the **SUPPLEMENTARY INFORMATION** in subpart A.

Comments on Specific Sections of Subpart E

Section 9901.501—Purpose

Section 9901.501 of the proposed regulation explains the purpose of subpart E, which contains regulations for the establishment of qualification requirements; recruitment for, and appointment to, positions; and assignment, reassignment, detail, transfer, or promotion of employees, consistent with 5 U.S.C. 9902(a) and (k). During the meet-and-confer process, participating labor organizations recommended that we add paragraphs (d) and (e) to this section, as follows:

(d) The policies and procedures for staffing and employment will be planned and developed in accordance with 5 U.S.C. 9902(f)(1)(d), and will be subject to national consultation rights and the duty to bargain under 5 U.S.C. chapter 71.

(e) Compliance with the policies, procedures, issuances and provisions of collective bargaining agreements on staffing and employment will be subject to the negotiated grievance procedure and binding arbitration before an independent third party, an alternative dispute resolution process that is mutually agreed to by the parties, or the Merit Systems Protection Board, as appropriate.

These and other bargaining issues are specifically addressed in several places in the **SUPPLEMENTARY INFORMATION** under *Major Issues*, as well as in subparts A and I.

Section 9901.502—Scope of Authority

Section 9901.502 of the proposed regulation authorizes the modification and replacement of certain provisions of title 5 related to hiring and assigning employees when a specified category of employees, applicants, and positions is covered by this subpart. This section also authorizes DoD to prescribe, in accordance with § 9901.105, implementing issuances to carry out the provisions of this subpart. Commenters objected to the proposed waiver and/or modification of various provisions of title 5; however, modification and/or replacement of the specified sections of title 5 is authorized by enabling legislation (5 U.S.C. 9902(k)) and is essential to the development of a more flexible system for hiring and assigning employees.

Section 9901.503—Coverage

Section 9901.503 provides the Secretary the authority to determine employee eligibility and coverage in accordance with § 9901.102(b). Several commenters, including labor organizations participating in the meet-and-confer process, recommended that certain types of positions be excluded from coverage under the new personnel system, including Police Officers, Teachers, Civil Service Mariners, and National Guard Technicians under title 32. These and other coverage issues are specifically addressed in the **SUPPLEMENTARY INFORMATION** in subpart A.

Section 9901.504—Definitions

In response to multiple comments requesting an explanation of, and/or improved distinctions between, similar terms, we have—

- Revised the definition of ''temporary employee'' to clarify the Department's intent. A temporary employee is an individual not on a career appointment who is employed for a limited period of time not to exceed 1 year. The appointment may be extended, up to a maximum established by implementing issuances, to perform the work of a position that does not require an additional career employee.
- Revised the definition of ''term employee'' to clarify the Department's intent. A term employee is an individual not on a career appointment who is employed for a period of time of

more than 1 year. The appointment may be extended, up to a maximum established by implementing issuances, when the need for an employee's service is not permanent.

• Revised the definition of ''time-limited employee'' to clarify the meaning. A time-limited employee is an individual appointed to a position for a period of limited duration (*i.e.*, term or temporary) in either the competitive or excepted service.

• Added a definition of ''initial probationary period'' to subpart A to clarify the intent of § 9901.512 and ensure consistency between subpart E and subpart H. An initial probationary period means the period of time, as designated by the Secretary, immediately following an employee's appointment during which an authorized management official determines whether the employee fulfills the requirements of the position to which assigned.

• Added a definition of ''in-service probationary period'' to subpart A to clarify the intent and ensure consistency between subpart E and subpart H. An in-service probationary period, such as a supervisory probationary period, means the period of time, as designated by the Secretary, during which an authorized management official determines whether the employee fulfills the requirements of the position to which assigned.

Section 9901.511—Appointing Authorities

Section 9901.511(b)(2) of the proposed regulations provides for DoD and OPM to jointly publish a notice in the **Federal Register** when establishing a new competitive appointing authority or a new excepted appointing authority that may lead to a subsequent noncompetitive appointment to a competitive position in the career service. Further, the section requires a period of public comment prior to the establishment of such an authority unless a critical mission requirement exists. Commenters criticized this section stating that this authority and our lack of specificity will lead to a patronage or spoils system and corruption of the merit system. They generally opposed the Department's ability to establish a new appointing authority, even if a critical mission requirement exists, without first issuing a notice in the **Federal Register** allowing for a public comment period.

During the meet-and-confer process, participating labor organizations recommended that we add paragraph (iii) to 9901.511(b)(2) to state: ''In exercising its authority under paragraph (b)(2)(ii) of this section, DoD will provide reasonable advance notice, where practicable, to the relevant congressional committees and to the respective labor organizations, of the reason(s) why the Secretary has elected to establish a new appointing authority to meet critical mission requirements or fill a severe shortage/critical hiring need without a preceding comment period. We do not agree. We recognize that if these hiring authorities are exercised and conditions of employment are impacted, local bargaining may occur in accordance with subpart I, as appropriate. We also agree that labor organizations, and indeed all employees, should receive notice via well-established processes, such as publication of notices in the **Federal Register**.

Some commenters did not understand the need for additional appointing authorities and viewed this flexibility as diminishing veterans' preference and as a mechanism for promoting nepotism, favoritism, and cronyism that will lead to more discrimination complaints and grievances. In a related issue, one commenter expressed concern over the lack of any reference to granting 5 or 10 preference points to veterans.

In establishing new appointing authorities, the regulations provide for review by OPM and, when an appointment is made using a new competitive appointing authority or a new excepted appointing authority that may lead to a subsequent noncompetitive appointment to a competitive position in the career service, a requirement for public comment. Implementing issuances will provide additional guidance and parameters to ensure that these authorities are utilized for specified purposes in accordance with merit system principles and the principles of veterans' preference. NSPS does not change or diminish preference as indicated in § 9901.501(c).

Section 9901.511(c) authorizes the Secretary to exercise direct hire authority when there is a severe shortage of candidates or a critical hiring need. One commenter suggested that direct hire authority should be automatically allowed without extensive documentation for those positions for which a separate pay schedule is authorized. We have not adopted this suggestion. Other commenters wondered if the direct hire authorities could apply to career employees or if they were meant only for new hires. The specific criteria and instructions concerning direct hire authorities will be provided in the implementing issuances; however, generally, a direct hire authority is used to appoint applicants not currently employed in the civil service.

A technical correction was made to § 9901.511(c)(3) by removing the reference to paragraph (a).

Section 9901.511(d) authorizes the Secretary to prescribe procedures for making time-limited appointments and for converting those employees without further competition to the career service provided certain conditions are met. Commenters cited unease with our idea of time-limited appointments that they believe will result in NSPS evolving into a system based on temporary employment. Some commenters do not believe temporary employees should have the ability to convert to permanent appointments without once again going through a competitive process. During the meet-and-confer process, participating labor organizations indicated that term employees should not perform work of permanent positions.

Regarding the comment about NSPS developing a system based on temporary employment, we have revised definitions for time-limited appointments, both temporary and term, in § 9901.504 to include specific information on appropriate timeframes for time-limited appointments. The Department will provide further guidance in implementing issuances on the appropriate use of time-limited appointments to meet mission needs. Regarding the comment about additional competition before converting a temporary appointment to a career appointment, we note that § 9901.511(d)(2) requires a time-limited vacancy announcement to include information about the possibility of noncompetitive conversion, if applicable, and that the individual be appointed to the time-limited appointment under NSPS competitive examining procedures. We believe that additional competition is not necessary due to the competition required for initial placement into the time-limited appointment. Also, in response to the comment during meet-and-confer, we have revised and clarified § 9901.511(d) to indicate that: (1) Term employment will not be used for positions that should be filled on a permanent basis; and (2) term appointments may be used to accomplish permanent work in circumstances where the position cannot be filled permanently, *e.g.*, the incumbent will be out of the position for a significant period of time, but is expected to return.

One commenter suggested that since there is no clear distinction between temporary and term employees, we

should refer to these employees simply as time-limited and delete the example ''(*e.g.*, an individual employed on a temporary or term basis)'' from § 9901.511(d)(2). We deleted this example as it is not necessary and we have clarified the distinction between temporary and term employees with the revised definitions in § 9901.504.

Another commenter suggested that we have only two appointment types, permanent and temporary, to simplify recruitment. We did not adopt this suggestion. Different circumstances and needs justify the use of both temporary employees and term employees.

Section 9901.512—Probationary Periods

Section 9901.512 of the proposed regulations provides that the Secretary may establish probationary periods, both initial and in-service, for employees appointed to positions in the competitive and excepted service covered by the National Security Personnel System. For clarity, we consolidated all information pertaining to probationary periods, both initial and in-service, in this section and deleted references to in-service probationary periods from § 9901.516. We have also added a definition of initial probationary period to subpart A of part 9901.

Commenters were disturbed by the lack of specificity on probationary periods. They pointed out that the opportunity for multiple or extended probationary periods may result in inconsistencies and abusive treatment by supervisors who might retain employees in a perpetual probationary status simply by moving them from one position to another. Commenters were concerned that managers will be able to make arbitrary decisions as to who serves an in-service probationary period and when. Commenters, including labor organizations participating in the meet-and-confer process, indicated that probationary periods should not exceed 1 year. Some commenters asserted that probationary periods of longer than 1 year show a lack of faith in management to make decisions about an individual's ability to perform satisfactorily within that timeframe. Commenters wanted to either retain the Governmentwide probationary periods established by OPM or to establish specific probationary periods to be published in the **Federal Register**. A few commenters supported longer probationary periods, such as a 3-year probationary period to substitute for the career-conditional period that currently exists. However, other commenters expressed concern because probationary periods could be as long as 5 or 10 years. During the meet-and-confer process, labor organizations indicated that in-service probationary periods should apply to supervisory positions only.

Based on the comments received, including comments from labor organizations participating in the meet-and-confer process, we have revised the final regulations to set parameters on probationary periods and to indicate the types of circumstances that would lead the Department to establish longer probationary periods. The Department will retain the flexibility to create probationary periods of varying lengths within those overall time frames. Specifically, we revised § 9901.512 to include that: (1) Probationary periods under NSPS will be between 1 year and 3 years; (2) probationary periods established for more than 1 year will be applied to categories of positions or types of work that require a longer time period to evaluate the employee's ability to perform the work; (3) in-service probationary periods will apply to certain groups of positions or occupations under prescribed specific conditions; and (4) that an employee who fails to complete an in-service probationary period will be returned to a grade or band no lower than that held before the in-service probationary period and the employee will be entitled to have his or her pay set in accordance with the applicable section of subpart C. Implementing issuances will clarify that decisions to establish probationary periods longer than 1 year will be made at the Department level. In addition, we have clarified that nothing in this section prohibits an action against an individual serving an in-service probationary period for cause unrelated to performance.

Section 9901.513—Qualification Standards

Section 9901.513 provides for DoD to either continue to use qualification standards established or approved by OPM, or to establish its own for positions covered by NSPS. One commenter wanted to know what is wrong with the OPM qualification standards and if he/she would be required to have different qualifications from the position hired into; another commenter suggested that we obtain OPM approval for all qualification standards for positions covered by NSPS; several others suggested possible changes for NSPS qualification standards. One commenter stated that the first sentence of this section contradicts the second sentence and suggested we add the following at the end of the second sentence: ''when OPM standards do not fully cover the occupation or are not available.''

We believe the Department may have a need to modify existing, or establish new, qualification standards to meet mission requirements. In addition, § 9901.105 of subpart A does include the establishment of alternative or additional qualification standards as an item to be coordinated with OPM. Therefore, we have not revised this section.

Section 9901.514—Non-Citizen Hiring

Section 9901.514 of the proposed regulations provides for DoD to establish procedures for appointing non-citizens to excepted service positions within the National Security Personnel System. During the meet-and-confer process, participating labor organizations recommended that we strike this entire section and also remove references to non-citizen hiring authority. Several commenters also disagreed with the hiring of non-citizens citing that such appointments are inconsistent with ''national security'' or might lead to the outsourcing of DoD functions. Many were skeptical that qualified U.S. citizens could not be found or trained. The Department currently has the authority, delegated by OPM, to hire non-citizens. Therefore, this provision simply codifies in the regulation the authority already given to the Department. We have retained the Governmentwide criteria that this authority can only be used in the absence of qualified U.S. citizens and when immigration and security requirements are met. Although the non-citizen hiring authority is rarely used, the Department does occasionally have situations where there are no qualified U.S. citizens available for critical positions.

Section 9901.515—Competitive Examining Procedures

Section 9901.515 of the proposed regulations provides DoD authority to establish procedures for examining applicants for entry into competitive and excepted service positions in NSPS, including the use of traditional numerical rating and ranking or alternative ranking and selection procedures (category rating), and specifies which applications/applicants the Department must accept and consider after a period of public notice. In response to comments we received on § 9901.515(a) asking who competitive examining procedures apply to, we have added wording to clarify that we are referring to applicants from outside of the civil service when we address who is recruited under competitive

examining procedures. We have modified § 9901.515(a)(1) to reflect that DoD will accept applications for vacant positions from all ''U.S. citizens,'' as opposed to all ''sources,'' to reflect a commenter's concern that the term ''sources'' implies we are referring to noncompetitive sources.

In a related matter, commenters expressed concern about DoD's ability to narrow the groups of employees who will be considered for jobs, including the elimination of highly-qualified workers from various segments of society and the treatment of veterans. The ability to narrow the area of consideration will not preclude us from opening any recruitment action as broadly as we choose. However, because technology has made the Federal Government a more applicant-friendly employer, it has also increased the administrative burden involved to efficiently and effectively fill mission-critical jobs. At times, we are overwhelmed by the volume of applications that must be evaluated and considered, especially when filling a small number of jobs. In these instances, we need the ability to narrow the pool of applicants we consider, and there may be a sufficient number of qualified applicants within the local commuting area. DoD will continue to provide equal treatment and equal access and will comply with the merit system principles.

Section 9901.515(b) of the proposed regulations allows DoD to establish procedures for the examination of applicants for entry into competitive and excepted service positions in NSPS. Such procedures must adhere to the merit system principles in 5 U.S.C. 2301 and veterans' preference requirements as set forth in 5 U.S.C. 3309 through 3320, and include provisions for employees entitled to priority consideration in accordance with 5 U.S.C. 8151. In response to a comment we received suggesting that this paragraph should address preference eligibility in the competitive service as well as the excepted service under NSPS procedures, and to provide clarity regarding the application of veterans' preference, we have revised the second sentence of this section to include a reference to 5 U.S.C. 1302(b) and (c) concerning veterans' preference in employment. We also made a technical correction to the third sentence by removing the reference to 5 U.S.C. 1302(c).

Section 9901.516—Internal Placement

Section 9901.516 of the proposed regulations provides for DoD to prescribe implementing issuances regarding the assignment, reassignment, reinstatement, detail, transfer, and promotion of individuals or employees into or within NSPS. This section also addressed the establishment of in-service probationary periods by way of the implementing issuances. For clarity, we moved all references to probationary periods, to include in-service probationary periods, to § 9901.512. We made no other changes to this section.

Subpart F—Workforce Shaping

General Comments

Commenters, including comments during the meet-and-confer process, were concerned that subpart F provides the Department with excessive rights to make decisions concerning the staffing of organizations, the abolishment of positions, and the need to implement a reduction in force (RIF). We disagree. The Department has no greater right to make restructuring decisions under subpart F than the Department presently has under section 351.201(a)(1) of OPM's RIF regulations.

Commenters, including comments during the meet-and-confer process, were also concerned that because subpart F provides more weight to performance as a retention factor than under OPM's 5 CFR part 351 RIF regulations, employees' retention standing under subpart F would be primarily based upon performance ratings rather than upon tenure and veterans' preference. In fact, subpart F provides that, consistent with OPM's RIF regulations, tenure remains the most important retention factor, with veterans' preference the second most important factor. Subpart F gives performance greater retention weight by providing that performance is the third most important factor, while creditable service is the least important of the four factors. Under OPM's RIF regulations, creditable service is the third most important factor while performance is the least important factor. The additional weight on performance is consistent with the Department's implementation of a performance-based HR system.

TABLE.—RELATIVE WEIGHT OF RETENTION FACTORS

Order of retention factors from highest to lowest	OPM's 5 CFR part 351 RIF regulations	NSPS 5 CFR 9901 subpart F workforce shaping regulations
1	Tenure (i.e., type of appointment)	Tenure (i.e., type of appointment).
2	Veterans' Preference	Veterans' Preference.
3	Creditable Federal Service	Performance Ratings.
4	Performance Ratings	Creditable Federal Service.

In order to ensure fairness in RIF actions and an impartial review of Department decisions, such as abolishing positions and crediting performance ratings, subpart F provides an appeal right under § 9901.611 for an employee who is reached for a RIF action resulting in separation, reduction in pay band, or furlough for more than 30 consecutive days (or more than 22 discontinuous workdays), and who believes that the Department improperly applied subpart F.

Commenters, including labor organizations participating in the meet-and-confer process, recommended that the design and implementation of subpart F should be subject to collective bargaining. This would be inconsistent with the enabling legislation (5 U.S.C. 9902(f)(4)), which makes the collaborative process the exclusive process for involvement of employee representatives in the planning, development, and implementation of the HR system. We have added language at §§ 9901.605(f) and 9901.606(e), which further clarifies that competitive areas and competitive groups are not subject to collective bargaining. Even so, in developing final subpart F regulations, we did consider all comments submitted by participating labor organizations, including comments during the meet-and-confer process.

Other Comments on Specific Sections of Subpart F

Section 9901.601—Purpose and Applicability

Section 9901.601 specifies that subpart F implements the Department's system to determine employees' retention rights resulting from organizational decisions such as realignment, reorganization, and closure.

As an alternative to the RIF system in the proposed regulation, commenters suggested that the Department retain or modify OPM's present 5 CFR part 351 retention regulations as an alternative to subpart F. These suggestions were inconsistent with a performance-based HR system and were not adopted.

Section 9901.602—Scope of Authority

As authorized by 5 U.S.C. 9902(k), § 9901.602 provides that subpart F modifies and then applies the statutory retention provisions in 5 U.S.C. 3501 through 3503, except for the veterans' preference provisions which are not modified in sections 3501 and 3502. Finally, the section also provides that the Department will further implement subpart F through implementing issuances in accordance with § 9901.105.

Section 9901.603—Definitions

Section 9901.603 defines specific terms for purposes of subpart F.

Commenters, including labor organizations participating in the meet-and-confer process, suggested that subpart F clarify the definition of ''competing employee.'' The Department will publish implementing issuances clarifying who is a ''competing employee'' under subpart F.

In order to clarify how the Department will consider performance as a retention factor under § 9901.607(a)(3), we added a definition of ''modal rating'' to § 9901.603. For purposes of subpart F, ''modal rating'' means the rating of record that occurs most frequently in a particular competitive group. The Department will publish implementing issuances further clarifying the consideration of performance in RIF competition under subpart F.

Commenters, including comments during the meet-and-confer process, on both sections 9901.603 and 9901.607 (''retention list'') suggested that the definition of ''retention factors'' specifically address the provision that retention factors includes ''such other factors as the Secretary considers necessary and appropriate to rank employees within a particular retention list.'' Commenters were also concerned that this discretion in the definition could lead to abuse in conducting RIF actions. After consideration of the comments, we decided to revise the definition of ''retention factors'' to reflect the actual ranking order of the four principal retention factors found in § 9901.607(a) (*i.e.*, tenure first, veterans' preference second, performance third, and creditable service fourth) without any additional changes to the definition. The Department will appropriately cover any consideration given to additional retention factors through implementing issuances. However, even if the Department chooses to give consideration to additional factors under authority of this definition, the Department must still follow the ranking order of the four factors found in § 9901.607(a).

A commenter suggested that a definition of ''tenure'' be added to § 9901.603. We did not adopt this suggestion. Section 9901.603 defines ''tenure group'' as the initial grouping of employees for RIF competition on the basis of the type of their appointments. Section 9901.607(a)(1) provides the ranking order of tenure as used in RIF actions under subpart F. The Department will publish implementing issuances on ''tenure'' to clarify for purposes of subpart F that tenure is granted and governed by the type of appointment under which an employee is currently serving without regard to whether his or her appointment is in a competitive position or an excepted position.

Section 9901.604—Coverage

Section 9901.604 specifies which employees and which personnel actions are covered by subpart F.

Commenters suggested that § 9901.604(a) of subpart F specifically exclude National Guard technicians who have retention rights under 32 U.S.C. 709. The technicians are not currently covered by OPM's RIF regulations; therefore, implementing issuances will similarly exclude the National Guard technicians from subpart F.

Commenters, including comments during the meet-and-confer process, suggested that the regulations specifically address the provision in § 9901.604(a)(2) providing that subpart F also applies to other employees ''designated by the Secretary as DoD may be authorized to include under 5 U.S.C. 9902.'' We retained the section as originally proposed. The Department will implement § 9901.604(a)(2) through implementing issuances.

A commenter suggested that subpart F include term employees, who in fact compete for retention in the ranking order covered in § 9901.607(a)(1). Other commenters, including comments during the meet-and-confer process, suggested that subpart F exclude term employees from RIF competition. We did not adopt this suggestion. The Department will clarify the coverage of term employees in subpart F through implementing issuances. In response to another comment, the Department will also clarify through implementing issuances the retention rights under subpart F of seasonal employees, employees on other nonpermanent appointments, and employees on probationary appointments.

Commenters, including comments during the meet-and-confer process, asked for clarification when subpart F would apply to employees of the Department. We agree that clarification is necessary. Proposed § 9901.604(b)(1) provided that subpart F applies to the release of a competing employee from a retention list by actions such as separation or reduction in band for a reason covered in § 9901.601 (*e.g.*, realigning, reshaping, etc). After consideration of the comments, we revised § 9901.604(b)(1) to clarify that subpart F also applies to a displacement action affecting a competing employee within a retention list.

A commenter agreed with the transfer of function provisions in § 9901.604(b)(2), which provides that the Department applies 5 CFR part 351, subpart C, of OPM's regulations to a transfer of function situation. Also, other commenters suggested that the Department develop its own transfer of function procedures for purposes of subpart F. After consideration of the comments, we revised § 9901.604(b)(2) and a conforming change in § 9901.602 to provide that, consistent with the requirements in section 5 U.S.C. 3503, the Department may through implementing issuances implement its own transfer of function procedures under subpart F.

Section 9901.604(b)(3) provides that the Department applies section 351.604 of OPM's regulations to implement a RIF furlough of more than 30 consecutive calendar days. Commenters suggested that the Department develop its own RIF furlough procedures for purposes of subpart F. However, we believe that only clarification is necessary. Consistent with the definition of ''furlough'' in 5 CFR 351.203 and the regulations in 5 CFR 351.604, we revised § 9901.604(b)(3) to provide that subpart F applies to the furlough of a competing employee for

more than 30 consecutive days or more than 22 discontinuous workdays. The Department will implement § 9901.604(b)(3) through implementing issuances covering both continuous and discontinuous furloughs.

Section 9901.604(c)(2) provides that subpart F does not apply to a reduction in band based upon reclassification due to new classification standards or the correction of classification error. Demotions resulting from misclassification or a new classification standard are similarly excluded from OPM's RIF regulations. Commenters, including labor organizations participating in the meet-and-confer process, suggested that § 9901.604(c)(2) be revised to apply subpart F to both a reduction in band and a reduction in pay resulting from a classification decision. We did not adopt this suggestion because the Department believes there is no need to establish rules that differ from the Governmentwide RIF regulations in this regard.

Section 9901.604(c)(7) provides that, with one exception, subpart F does not apply to a reduction in band based upon job erosion. The exception provides that subpart F applies to a reduction in band based upon job erosion when the agency has formally announced a reduction in force in the competitive area that will be effective within 180 days. Demotions resulting from job erosion are similarly excluded from OPM's RIF regulations, with a comparable exception. Commenters, including labor organizations participating in the meet-and-confer process, suggested that § 9901.604(c)(7) be revised to apply subpart F to both a reduction in band and a reduction in pay resulting from job erosion. We did not adopt this suggestion because the Department believes there is no need to establish rules that differ from the Governmentwide RIF regulations in this regard.

Section 9901.605—Competitive Area

Section 9901.605 covers ''Competitive Area,'' which defines the organizational and geographic boundaries within which employees compete for retention under subpart F.

Commenters, including labor organizations participating in the meet-and-confer process, believed that the minimum competitive area under § 9901.605(a) was too narrow and could encourage the Department to target employees for RIF actions. One commenter supported the competitive area standard under § 9901.605(a). After consideration of comments on the competitive area standard, we have retained § 9901.605(a) without revision. Section 9901.605(a) provides the Department with the option of restricting RIF actions to organizations and positions directly affected by organizational decisions such as realignment, reorganization, and closure. The Department also retains the option to use a competitive area larger than the minimum standard (*e.g.*, an entire activity could be defined as a single competitive area).

To ensure fairness in the Department's competitive area decisions, § 9901.605(e) requires that a competitive area must be established only on the basis of legitimate organizational reasons. The section prohibits establishment of a competitive area for the purpose of targeting an employee for a RIF action because of nonmerit factors. An employee who is reached for a separation, demotion, or furlough action, and believes that the Department improperly established a competitive area under subpart F, may appeal the Department's decision under § 9901.611.

Commenters suggested that subpart F clarify the competitive area standard and terminology under § 9901.605(a). Commenters also requested that subpart F clarify the Department's oversight role in reviewing competitive area decisions. Another commenter suggested that subpart F clarify whether § 9901.605 potentially authorizes establishment of a one-person competitive area. Finally, commenters, including labor organizations participating in the meet-and-confer process, suggested that subpart F clarify the Department's procedures for approving a change in the competitive area definition within 90 days of the effective date of the RIF. The Department will clarify the competitive area standard, its terminology, and related material in implementing issuances.

Labor organizations participating in the meet-and-confer process suggested that § 9901.605 be revised to provide that a competitive area may not include only preference eligibles. This suggestion was not adopted. Section 9901.605 provides that the Department establishes competitive areas solely on the basis of organizational and geographic decisions, not on the basis of the retention standing of individual employees in the competitive areas.

A commenter was concerned that a competitive area defined under § 9901.605 could result in the release of an employee with higher performance ratings than another employee in a different competitive area. We recognize that this scenario may result from any RIF situation, and could also occur today under current OPM regulations where employees compete for retention only within a single competitive area.

A commenter was concerned that a competitive area defined in § 9901.605 could limit the potential future promotion opportunities of an employee involved in RIF competition. That scenario, too, may result from any RIF situation, including actions taken today under OPM's regulations.

A commenter was concerned that an employee reached for a RIF action under subpart F could not appeal a competitive area decision. As previously noted, an employee may appeal the competitive area as part of a RIF appeal under § 9901.611.

Section 9901.606—Competitive Group

Section 9901.606 covers the ''competitive group,'' which serves as the basis for ranking employees on the basis of their relative retention standing. After the Department applies the retention factors (*i.e.*, tenure, veterans' preference, performance, and creditable service), the competitive group ranks employees in the order of their relative standing on a ''retention list'' that is similar to a ''retention register'' under 5 CFR 351.404 of OPM's RIF regulations.

Commenters, including labor organizations participating in the meet-and-confer process, were concerned that a competitive group established under § 9901.606(a) provides too narrow a basis for RIF competition. After consideration of comments on establishment of a competitive group, § 9901.606(a) is adopted without revision. Section 9901.606(a) provides the Department with an additional option to restrict RIF actions to organizations and positions directly affected by organizational decisions such as realignment, reorganization, and closure. The Department also retains the option to establish a larger competitive group that potentially could cover an entire activity.

A commenter was concerned that a competitive group defined in § 9901.606(a) could limit the potential future promotion opportunities of an employee involved in RIF competition. That situation could result in any RIF, including actions taken today under OPM's regulations.

Commenters suggested that subpart F clarify how and when the Department will establish and/or modify competitive groups. A commenter also suggested that subpart F clarify competitive group terminology. The Department will clarify its competitive group policies in implementing issuances.

Section 9901.606(c) provides that the Department uses employees' official positions of record to place employees into a competitive group. The section also provides that the Department ''may supplement an employee's official position description by using other applicable records that document the employee's actual duties and responsibilities.'' A commenter suggested that the Department place employees into a competitive group only on the basis of their official positions of record. Other commenters suggested that subpart F cover how the Department will use records other than official positions to establish competitive groups. After consideration of the comments, we have retained § 9901.606(c) without revision. Section 9901.606(c) provides the Department with maximum flexibility in establishing competitive groups based upon employees' actual duties and responsibilities.

Commenters suggested revision of § 9901.606 to provide that the Department may not establish a competitive group comprised of fewer than 25 employees. Commenters, including labor organizations participating in the meet-and-confer process, also suggested revision of § 9901.606 to provide that the Department may not establish a competitive group comprised only of preference eligibles. We did not adopt these suggestions. The Department makes staffing decisions under subpart F based upon organizational considerations. Consistent with this premise, § 9901.606 provides that the Department establishes competitive groups based upon employees' positions without regard to the number of employees performing those positions.

Section 9901.607—Retention Standing

Section 9901.607 covers ''retention standing'' on a ''retention list'' under subpart F. The Department ranks employees on a ''retention list'' on the basis of their relative retention standing. This section also covers access by employees and their representatives to the retention list.

Commenters suggested that subpart F clarify the ranking order of the factors the Department uses to establish retention lists under § 9901.607. In fact, sections 9901.607(a)(1)–(4) mandate the required order and weight of the retention factors (*i.e.*, tenure has the most weight, creditable service has the least weight). The Department will publish implementing issuances further clarifying the ranking order of the retention factors in § 9901.607(a).

Section 9901.607(a)(1) provides that in ranking employees on the retention list, employees with career tenure, including employees serving an initial probationary period, are listed first, followed by employees on term and similar appointments as identified in DoD implementing issuances. Commenters, including comments during the meet-and-confer process, suggested that employees serving an initial probationary period on appointment to the Federal service be listed below employees with career tenure, and above employees with term or similar appointments. We agree with this suggestion and have accordingly revised § 9901.607(a)(1) to incorporate this change. Commenters suggested that § 9901.607(a)(1) be revised to clarify whether, before a RIF, the Department may convert a temporary noncompeting employee with no retention rights under subpart F to a permanent position that provides the incumbent with full retention rights. We did not adopt this suggestion. The Department has the right to take appropriate personnel actions before, during, and after the effective date of the RIF. A commenter suggested that § 9901.607(a)(1) be revised to include service as a tenure element. We did not adopt this suggestion. Creditable service is a separate retention factor covered by § 9901.607(a)(4).

Commenters noted that § 9901.607(a)(2) erroneously referenced 5 CFR 351.504(c) and (d) rather than 5 CFR 351.501(c) and (d) of OPM's RIF regulations. We corrected this misprint.

Commenters were concerned that § 9901.607(a)(2) reduces the relative weight of veterans' preference as a retention factor under subpart F. In fact, § 9901.607(a)(2) applies veterans' preference with the same retention weight as under OPM's current RIF regulations, which are referenced in § 9901.607(a)(2). Specifically, under § 9901.607(a)(2) veterans' preference is considered as a retention ranking factor immediately after tenure on the same basis as OPM's regulations consider veterans' preference in the context of tenure.

A commenter suggested that § 9901.607(a)(2) be revised to include a cite to the statutory basis for veterans' preference in RIF. This suggestion was not adopted. Section 9901.602 states that, without modification, subpart F applies the RIF and statutory preference requirements mandated by 5 U.S.C. 3501 through 3503. Also, § 9901.607(a)(2) references back to the provisions in 5 CFR 351.501(c) and (d) of OPM's reduction in force regulations that implement the retention preference requirements.

A commenter suggested that § 9901.607(a)(2) be revised to increase the relative weight of veterans' preference as a retention factor. This suggestion was not adopted. Section 9901.607(a)(2) provides veterans' preference with the same weight in determining RIF retention standing as under OPM's regulations.

As noted in the General Comments section above, commenters, including labor organizations participating in the meet-and-confer process, were concerned that § 9901.607(a)(3) excessively increases the relative weight of performance as a retention factor under subpart F. Section 9901.607(a)(3) considers performance as the third most important retention factor after tenure and veterans' preference. Under OPM's RIF regulations, performance receives the least weight as a retention factor. As we noted in the General Comments, the additional retention weight for performance is fully consistent with the goal of increasing the likelihood that higher-performing employees will be retained in the event of a RIF.

Commenters, including labor organizations participating in the meet-and-confer process, asked that § 9901.607(a)(3) clarify how the Department will provide additional weight to performance as a retention factor. The Department will publish implementing issuances clarifying the consideration of performance in RIF competition under subpart F. Other commenters requested clarification on how the Department will ensure that ratings are impartial and objective, as well as how an employee may contest a rating within the Department. These concerns are discussed in subpart D.

Commenters, including labor organizations participating in the meet-and-confer process, suggested that § 9901.607(a)(3) be revised to clarify that the Department will not always use a single rating of record to determine the weight of performance upon an employee's retention standing. We agree with this suggestion. The Department's implementing issuances covering the consideration of performance in RIF competition under subpart F will explain how employees will receive retention credit for their multiple ratings under the Department's personnel system. In a conforming change, § 9901.603 includes a definition of ''modal rating'' that the Department will use to determine retention credit for employees who do not have any ratings of record under the Department's personnel system.

Commenters suggested that § 9901.607(a)(3) be revised to provide that performance receive the same or no greater retention weight than creditable service. This suggestion was not adopted. Consistent with the Department's personnel system that emphasizes performance, § 9901.607(a)(3) provides that performance receives greater weight as a retention factor than creditable service.

A commenter suggested that performance receive less weight under subpart F than veterans' preference. As previously noted, §§ 9901.607(a)(2) and (a)(3) provide that veterans' preference is considered as a retention factor before performance under subpart F.

Commenters suggested that § 9901.607(a)(3) be revised to increase the relative weight of performance over veterans' preference as a retention factor. This suggestion was not adopted. Section 9901.607(a)(2) considers veterans' preference on the same basis as under OPM's regulations determining RIF retention standing, while § 9901.607(a)(3) provides less weight to performance than veterans' preference as a retention factor.

Commenters suggested that subpart F provide retention credit for performance on the same basis as OPM regulations. This suggestion was not adopted. The additional weight for performance as a retention factor under subpart F is consistent with the increased emphasis on performance in the Department's new personnel system.

Commenters, including labor organizations participating in the meet-and-confer process, were concerned that § 9901.607(a)(4) excessively decreases the relative weight of creditable service as a retention factor under subpart F. Section 9901.607(a)(4) considers service as the fourth and least important retention factor. Under OPM's RIF regulations, service is the third most important retention factor, while performance receives the least weight as a factor. Again, the decreased retention weight on service and the additional weight for performance are consistent with the increased emphasis on performance in the Department's performance-based personnel system.

A commenter suggested that subpart F clarify ''length of service.'' Section 9901.607(a)(4) provides that employees receive retention credit for creditable civilian and Armed Forces service on the basis of 5 U.S.C. 3502(a)(A) and (B), and OPM's regulations in 5 CFR 351.503. However, we believe that clarification is necessary. We revised § 9901.607(a)(4) to provide that in calculating creditable civilian and uniformed service under subpart F, the Department uses 5 CFR 351.503 of OPM's RIF regulations, but without regard to provisions covering additional service credit for performance in 5 CFR 351.503(c)(3) and (e) of OPM's regulations. The Department will publish implementing issuances clarifying RIF service credit under subpart F.

In a clarifying edit, we added § 9901.607(a)(5), which provides that the Department may establish tie-breaking procedures when two or more employees have the same retention standing. This sentence was included in § 9901.607(a)(4) of the proposed regulations.

Commenters, including labor organizations participating in the meet-and-confer process, suggested that § 9901.607(c) be revised to provide that all employees have access to a retention list established under § 9901.607(a)(1). We did not adopt this suggestion because § 9901.607(c) provides that employees who have received a specific written RIF notice have access to a retention list in accordance with 5 CFR 351.505 of OPM's RIF regulations. However, we believe that clarification is necessary. We revised § 9901.607(c) to provide that in allowing access to retention records, the Department uses section 5 CFR 351.505 of OPM's reduction in force regulations, but substitutes ''retention list'' for ''competitive level'' or ''retention register.'' The Department will publish implementing issuances clarifying access to retention lists under 9901.607(c).

Section 9901.608—Displacement, Release, and Position Offers

Section 9901.608 covers personnel actions that result in displacement within the retention list or the release of an employee from a retention list under subpart F. A qualified employee reached for release from his/her present position because of position abolishment or displacement by a higher-standing employee on the retention list may potentially displace a lower-standing employee on the list before separation or furlough by RIF.

A commenter suggested that § 9901.608(a) be revised to clarify how the Department determines that a higher-standing employee is qualified to displace a lower-standing employee on the retention list. Another commenter suggested that § 9901.608(a)(1)(i) be revised to eliminate a requirement that the Department only uses 5 CFR 351.702 of OPM's retention regulations to determine employees' qualifications for displacing a lower-standing employee on the retention list under subpart F. We agree that clarification is necessary. We revised § 9901.608(a)(1)(i) to provide that in determining the qualifications of a higher-standing employee to displace a lower-standing employee under subpart F, the Department uses, as applicable, 5 CFR 351.702 of OPM's retention regulations, or its own qualifications, consistent with other requirements in 5 CFR 351.702. The Department will publish implementing issuances clarifying qualification determinations for displacement within a retention list under § 9901.608(a). We also added § 9901.608(a)(1)(iii) to clarify that a displaced employee must be in the same or lower pay band as the higher-standing employee who displaced him/her.

Commenters suggested that § 9901.608(a) be revised to clarify terminology such as ''status'' and ''undue interruption.'' The Department will publish implementing issuances clarifying terminology under 9901.608(a).

A commenter suggested that § 9901.608(a) be revised to require the Department to provide positive efforts that would increase the likelihood of higher-standing employees being qualified to displace employees with lower retention standing. We did not adopt this suggestion. We believe it would be unfair for the Department to pursue a program whose purpose is to increase the likelihood of one category of employees displacing a different category of employees in a RIF.

Commenters suggested that § 9901.608(b)(1) be revised to clarify the order in which employees are released from the retention list. Section 9901.608(b)(1) provides that, consistent with the order of retention required by § 9901.607(a), employees with the lowest retention standing are released before higher standing employees on the retention list.

Commenters also suggested that § 9901.608(b)(2) clarify displacement rights involving time-limited positions. We agree that clarification is necessary. We revised § 9901.608(b)(2) to provide that under subpart F a competing employee may not be released from a retention list containing a position held by a temporary employee when the competing employee is qualified for the position under § 9901.608(a)(1)(i). The Department will publish implementing issuances clarifying release from retention lists under 9901.608(b).

A commenter suggested that § 9901.608(b) clarify the procedures that the Department uses to break ties in employees' relative retention standing. The Department will publish implementing issuances clarifying tie-

breaking procedures in releasing employees from retention lists. Section 9901.607(a)(5) of the final regulations covers the Department's right to establish tie-breaking procedures.

A commenter suggested that § 9901.608(b)(3) clarify how the Department will use exceptions to the regular order of release from the retention list. We agree that clarification is necessary. We revised § 9901.608(b)(3) to provide that in temporarily postponing the release of an employee from the retention list, the Department uses 5 CFR 351.506, 351.606, 351.607, and 351.608 of OPM's RIF regulations, but substitutes the term ''retention list'' for the term ''competitive level'' where part 351 uses that term in the four identified sections. The Department will publish implementing issuances further clarifying exceptions to the usual order of release under § 9901.608(b)(3).

Commenters suggested that § 9901.608(c) clarify whether the Department will consider employees' retention standing in offering vacant positions under subpart F. We agree that clarification is necessary. Section 9901.608(c) provides that the Department must use retention standing in offering a vacant position in the same competitive area to an employee released from a retention list under subpart F. We revised § 9901.608(c) to clarify that the Department must use retention standing when offering a vacancy in the same competitive area to an employee who is competing on the retention list under § 9901.608(a)(1) because of either position abolishment or displacement by an employee with higher retention standing. The Department will publish implementing issuances clarifying offers of vacancies under § 9901.608(c).

A commenter asked whether a released employee who is offered a vacancy under § 9901.608(c) has any potential rights to pay retention. The Department will publish implementing issuances clarifying employees' entitlements to pay retention under § 9901.608(c). However, in a conforming change, we have revised § 9901.355 of subpart C to provide additional information on pay retention.

Commenters, including labor organizations participating in the meet-and-confer process, suggested that § 9901.608(d) be revised to provide that, in lieu of RIF separation or furlough, an employee released from a retention list would have potential displacement rights to positions held by lower-standing employees on other retention lists similar to ''bump'' and ''retreat'' regulations provided to released employees under subpart G of part 351 of OPM's RIF regulations. This suggestion was not adopted. Section 9901.608(d) provides the Department with flexibility to restrict RIF actions to organizations and positions directly affected by organizational decisions such as realignment, reorganization, and closure. In a related clarification, we revised § 9901.608(d)(2) to provide that the furlough of an employee released from a retention list is covered by § 9901.604(b)(3). The Department will publish implementing issuances clarifying actions following the release of employees from a retention list under § 9901.608(d).

Section 9901.609—Reduction in Force Notices

Section 9901.609 covers the notice that the Department must issue to each employee before release from the retention list under subpart F. The Department must issue a specific written notice a minimum of 60 days before the employee is reached for release from the retention list by a RIF action (*e.g.*, separation or furlough).

Commenters suggested that § 9901.609 be revised to provide 120 days written notice. This suggestion was not adopted. The requirement for a minimum 60 days notice of a RIF action is consistent with the requirements of 5 U.S.C. 3502(d)(1)(A) for OPM's regulations published in 5 CFR 351.801(a)(1). The Department will publish implementing issuances clarifying the content of RIF notices issued under § 9901.609.

In a clarifying change consistent with management flexibilities provided by 5 CFR 351.801(b), § 9901.609 is revised to provide that when the Department applies subpart F because of circumstances not reasonably foreseeable, the Secretary, at the request of a component head or designee, may approve a RIF notice period of less than 60 days. The notice period must cover at least 30 days before the date of release from the retention list. The Department will publish implementing issuances covering a RIF notice period of less than 60 days under § 9901.609.

Section 9901.610—Voluntary Separation

Section 9901.610 covers voluntary separation from the Department as a RIF action. Under this option, the Department may allow an employee to volunteer for separation from the service by reduction in force when the action avoids the RIF separation of another employee.

One commenter suggested that the Department use the voluntary separation option to avoid RIF actions. The Department will publish implementing issuances clarifying the applicability of voluntary RIF separations under § 9901.610.

Section 9901.611—Reduction in Force Appeals

Section 9901.611 covers RIF appeals. An employee who is reached for a RIF action resulting in separation, reduction in band, or furlough under § 9901.604(b), and who believes that the Department improperly applied subpart F, has the right to appeal to the Merit Systems Protection Board. Also, commenters during the meet-and-confer process suggested, as an alternative to appealing RIF actions to the Board, employees should instead have the right to file a grievance. We did not adopt this suggestion. Section 9901.611(a) references 5 CFR 351.901 of OPM's regulations in providing the same impartial right to appeal a RIF action under subpart F as provided to an employee under OPM's retention regulations.

For clarification, we revised § 9901.611(a)(3) to provide that an employee has the right under subpart F to appeal a furlough of more than 30 days, as defined in § 9901.604(b)(3).

Commenters, including labor organizations participating in the meet-and-confer process, suggested that § 9901.611(a) be revised to provide a right to appeal a RIF action under subpart H of part 9901 (''Appeals''). This suggestion was not adopted. Subpart H of part 9901 only covers appeals of certain adverse actions taken under subpart G of part 9901 (*e.g.*, removals, suspensions for more than 14 days, furloughs of 30 or less consecutive days, and reductions in pay band—or a comparable reduction). The procedures in subpart H are appropriate for reviewing an adverse action appeal (*i.e.*, an appeal of a personnel action that the Department took for cause). In contrast, § 9901.611(a) provides for the right to appeal a RIF action (*i.e.*, an appeal of a personnel action that the Department took for an organizational reason) on the same basis as under OPM's RIF regulations.

Commenters suggested revision of § 9901.611(a) to provide for expedited Board review of appeals under subpart F. This suggestion was not adopted. Section 9901.611 provides for the right to appeal a RIF action to the Board using the same procedures as an appeal under OPM's regulations.

Commenters, including labor organizations participating in the meet-and-confer process, suggested revision of § 9901.611(b) to provide for the right

to appeal to the Board, or another third-party appellate body, an action taken under internal Department placement programs. This suggestion was not adopted. Section 9901.611(b) does not provide the right to appeal an internal placement action (including a placement under the Priority Placement Program). An employee who believes that the Department failed to properly effect an internal placement action may contest the action through a grievance or other remedy available for the review of the Department's internal staffing decisions.

Subpart G—Adverse Actions

General Comments

Many commenters, including labor organizations participating in the meet-and-confer process, objected to the provisions in subpart G. They felt that the proposed regulations would adversely impact due process rights, discrimination and whistleblowing claims, and the ability to retain staff. We disagree. Under the enabling legislation, DoD is prohibited from waiving or modifying any provision relating to prohibited personnel practices or merit system principles, including reprisal for whistleblowing or unlawful discrimination. The regulations therefore do not modify these protections in any way. The enabling legislation also requires DoD to ensure that employees are afforded the protections of due process, which we have done. In accordance with U.S. Supreme Court decisions, the regulations ensure employees notice, a right to reply, a final written decision, and a post-decision review when the Secretary proposes to deprive them of constitutionally protected interests in their employment. Although we have made changes to the proposed regulations, due process and other legal protections are preserved as required by Congress, and we do not believe the regulations in this subpart will have any negative effect on retention efforts.

Section 9901.701—Purpose

This section outlines the purpose of this subpart and provides for the development and publication of DoD implementing issuances. During the meet-and-confer process, the participating labor organizations stated that DoD does not have the authority to prescribe implementing issuances to carry out the provisions of this subpart. We disagree. The enabling legislation expressly states that the Secretary and the Director will jointly prescribe regulations for the system. This carries with it the authority for the Secretary to provide further clarification, guidance, and instruction on these regulations through implementing issuances. It is also consistent with the continuing collaboration process described in § 9901.106 which implements 5 U.S.C. 9902(f)(1)(D).

Section 9901.702—Waivers

This section specifies the provisions of title 5, U.S. Code, that are waived for employees that are covered by the NSPS adverse action system established under subpart G. During the meet-and-confer process, the participating labor organizations recommended that this provision be deleted. We do not agree with this recommendation because it is inconsistent with the enabling legislation, which allows waiver of certain provisions of title 5, U.S. Code, and the creation of new adverse action procedures. We have made no changes to this section.

Section 9901.703—Definitions

This section defines terms relevant to this subpart. The labor organizations participating in the meet-and-confer process recommended that the definition of ''adverse action'' be amended to include ''demotion'' and exclude the words ''or other comparable reduction.'' We disagree. The term ''demotion'' is not used in the regulations. The concept of demotion is covered through reduction in pay band (or comparable reduction). The term ''comparable reduction'' is taken directly from the enabling legislation. These labor organizations also recommended that a definition be added for ''band.'' Commenters, and labor organizations during the meet-and-confer process, recommended that a definition be added for ''day.'' We agree and have added definitions for those terms. A definition of ''reduction in pay'' has also been added to clarify that nonreceipt of a pay increase (such as a rate range adjustment, supplemental adjustment, or a performance pay increase) does not constitute a reduction in pay and therefore is not an adverse action.

During the meet-and-confer process, labor organizations also suggested that the definitions of ''indefinite suspension,'' ''pay,'' and ''suspension'' be modified. Since the definitions for these terms are essentially identical to current statutory and regulatory definitions, we see no basis for making the suggested modifications. Finally, labor organizations, as well as commenters, recommended the deletion of ''mandatory removal offenses'' (MROs). We disagree because of that term's relevance to this section and the fact that the concept of MROs is retained.

Section 9901.704—Coverage

Section 9901.704 describes the types of actions and employees covered by and excluded from coverage under the subpart. Commenters, as well as labor organizations participating in the meet-and-confer process, recommended that employees who are serving in-service probationary periods be given appeal rights. We have clarified that employees who are serving an in-service probationary period will have appeal rights if they are not returned to a grade or band and pay rate no lower than that held before the in-service probationary period. The labor organizations, during the meet-and-confer process, also recommended that we add a provision stating that employees who are excluded from the enabling legislation are not covered by this provision. Such a provision is unnecessary because employees excluded from coverage under the enabling legislation are not covered by any provision of the NSPS regulations.

We received many comments suggesting we add reduction in force (RIF) actions to coverage. We believe the NSPS appeal system should be limited to removals, suspensions for more than 14 days, furlough for 30 days or less, and reduction in pay or pay band (or comparable reduction) as set forth in 5 U.S.C. 9902(h)(4)(A). Employees subject to RIF actions will continue to have the same appeal rights as they do today and that is made clear in subpart F of the regulations. Commenters recommended clarification as to whether adverse actions resulting from agency suitability determinations are excluded. We believe such clarification is unnecessary since agency suitability actions, including removals, are taken under 5 U.S.C. chapter 73. Suitability actions under chapter 73 are by definition not adverse actions. Moreover, the enabling legislation expressly excludes from its coverage suitability actions taken under 5 U.S.C. chapter 73. See 5 U.S.C. 9902(d)(2). Other commenters recommended that term employees be excluded from coverage. The Department wishes to maintain the status quo with respect to term employees' appeal rights. One commenter suggested that the movement of an employee to a lower pay band not be considered an adverse action under NSPS when such movement is the result of a less than fully successful performance rating. We disagree. The enabling legislation identified a reduction in pay band as an appealable action.

Section 9901.711—Standard for Action

This provision describes the standard for taking an action against an employee as ''for such cause as will promote the efficiency of the service.'' During the meet-and-confer process, participating labor organizations, as well as most commenters, agreed with this provision. However, some commenters stated that this standard provides management too much discretion. We have retained this long-standing and well established ''efficiency of the service'' standard.

Section 9901.712—Mandatory Removal Offenses

This provision gives the Secretary the authority to identify Mandatory Removal Offenses (MROs), which are offenses that have a direct and substantial impact on the Department's national security mission. An employee who commits such an offense must be removed from Federal service, unless the Secretary determines in his or her sole and exclusive discretion that a lesser penalty is appropriate. Commenters as well as participating labor organizations during the meet-and-confer process stated that this provision should be deleted in its entirety because in their view, the establishment of MROs exceeds DoD's authority under the enabling legislation and is open to abuse. Some commenters stated that MROs should be defined and subject to public comment through the formal rule-making process. Commenters expressed concern that the Secretary can issue and change the list at will. Some commenters stated that the Secretary should not be the only mitigating authority for MROs and that his non-reviewable discretion is inappropriate for a political appointee. In addition, commenters stated MROs do not leave any room for flexibility based on individual circumstances or mitigating factors and takes the flexibility away from DoD supervisors. Other commenters expressed concern that if an MRO offense is not sustained, an employee can still be charged with a non-MRO offense based on the same facts.

We disagree that the establishment of MROs exceeds the Department's authority. The enabling legislation expressly provides authority to waive the current statutory provision governing adverse action in establishing the HR system. Although no MROs have been established, the provision that allows for the establishment of MROs must be retained to support the vital mission of the Department. We have revised the proposed regulations to provide, at a minimum, that MROs will be (1) identified in advance as part of the Department's implementing issuances, (2) publicized upon establishment via notice in the **Federal Register**, and (3) made known to all employees on a periodic basis, as appropriate, through means determined by the Department. Examples of potential MROs are provided under Major Issues: Adverse Actions and Appeals. The offenses that may be identified as MROs will be so egregious as to have a direct and substantial adverse impact on the Department's national security mission, and therefore would not properly be subject to mitigation except in unusual circumstances as determined by the Secretary. Employees who commit such offenses must be removed from the Department and the Federal service. The support of the national security mission outweighs any loss of flexibility in the system. We disagree that it is inappropriate for the Department to have the ability to take a subsequent action if the offense is found to not be an MRO. We believe that if an employee's misconduct is found to qualify as an MRO, it does not mean that the misconduct should not be addressed. For misconduct amounting to an MRO, mitigation of penalties, review of notice letters, and designation of offenses must be at the highest levels of the Department to prevent abuse, ensure judicious use of the authority, and provide maximum transparency for employees. In light of the above, we believe that MROs need not be subject to public comment through the formal rule-making process. They will, however, be subject to continuing collaboration with employee representatives. This ensures transparency in the process of establishing MROs.

Section 9901.714—Proposal Notice

This provision outlines procedures for issuing proposal notices, including a shorter advance notice period of at least 15 days. Commenters and labor organizations participating in the meet-and-confer process recommended retaining the current 30-day written notice of a proposed adverse action. Other commenters argued that due process is denied because of the potential inability to gather and review evidence within the proposed time frame. We disagree that the advance written notice period should be 30 days. The shortened notice supports the NSPS goal of streamlining the adverse action process and provides adequate time for consideration of evidence. We have clarified in the regulations that the 15-day notice period represents the minimum period of time for advance notice to the employee. We have further modified this section to clarify that notice of proposed adverse action or opportunity to reply are not required in the event of a furlough of 30 days or less without pay due to unforeseeable circumstances.

This provision also shortens the minimum notice period from 7 to 5 days in situations where there is reasonable cause to believe a crime has been committed. Commenters and labor organizations participating in the meet-and-confer process recommended retaining the current crime provision notice period of 7 days. We believe that 5 days is the appropriate amount of time to allow for notice and reply in such situations given the need to take action in these situations. Commenters expressed concern over the lack of an explicit requirement that the Department have actual knowledge of a criminal investigation or criminal charges being filed against an employee before imposing the 5-day notice period. Commenters also recommended that ''reasonable cause'' be defined. The criteria under which the crime provision may be invoked is well established in current statute, regulation, and case law and was not changed in the proposed regulations. We do not believe it necessary to define reasonable cause in these regulations. Each case is unique and considerable guidance is provided in existing case law.

Labor organizations during the meet-and-confer process recommended including a requirement for DoD to provide employees copies of all evidence including exculpatory evidence during the notice period. While the regulations do not require that copies of evidence be delivered to the employee, the Department will ensure that the employee is informed of his or her right to review the Department's evidence supporting the proposed action. There is no need to specifically require DoD to make exculpatory evidence available to the employee during the notice period since all evidence relied upon by the decision-maker must be made available to the employee.

Labor organizations during the meet-and-confer process also recommended modifying the proposed regulations with regard to the status of an employee during the notice period. Under current law and regulation, an employee is normally entitled to be in a pay status during the notice period. A Component may place an employee in a different position or even in a non-duty status, but the employee must continue to be

paid. The labor organizations recommended that the Department's authority to assign an employee to other duties or to place the employee in a non-duty pay status should be substantially limited, even if the Department determines that the employee's continued presence would have an adverse impact on the Department's mission. The labor organizations recommended deleting ''the Department's mission'' as a possible justification for assigning an employee to a different status or position. We do not believe such modification is appropriate. Deleting ''the Department's mission'' as a reason for reassigning an employee to other duties or placing him or her in a non-duty pay status would adversely impact the Department's flexibility in accomplishing the mission.

Commenters stated the Department should not be allowed to require an employee to use personal leave during the notice period. We disagree with the labor organizations' recommended deletion of language in this area. We do not envision requiring an employee to use personal leave during a notice period; however, an employee may voluntarily elect to request leave. If, in the exceptional case, the Department places an employee on personal leave involuntarily, such action would constitute an adverse action and be subject to the procedural requirements of subpart G and, depending on the facts of the case, could potentially be appealed under subpart H. This is consistent with current law and the proposed language is not intended to modify the status quo.

Section 9901.715—Opportunity to Reply

This provision outlines procedures related to the opportunity to reply and provides that employees be granted at least 10 days to reply (or 5 days when there is reasonable cause to believe the employee has committed a crime). Commenters and labor organizations participating in the meet-and-confer process recommended employees be provided at least 30 days to reply instead of 10 days, and at least 7 days when there is reasonable cause to believe the employee has committed a crime for which a sentence of imprisonment may be imposed. They believe the minimum 10-day (or 5-day, under the crime provision) reply period is not sufficient time for the employee to provide a response and that the shortened time period limits managers' ability to fully consider the employee's reply. Other commenters stated the regulations should allow for the extension of time limits. Commenters and labor organizations participating during the meet-and-confer process also recommended deletion of the requirement that a reply period run concurrently with a notice period.

We disagree that the reply period should be increased and believe the proposed minimum 10-day reply period (or 5 days when the ''crime provision'' is invoked) is ample time for an employee to prepare a response. We also believe that such a period provides sufficient time for a manager to consider an employee's reply. Furthermore, both the 15-day notice period and the 10-day reply period represent minimums and may be extended as necessary at the Department's discretion. We believe that the reply period should run concurrently with the notice period. This is consistent with the goal of streamlining the procedure and is unchanged from current law. The reply period does end prior to the end of the notice period; however, this is necessary to allow time for managers to consider the reply and make a timely decision.

Commenters and labor organizations participating in the meet-and-confer process requested clarification of provisions in this section which refer to an employee being represented by an individual ''at the employee's expense.'' The circumstances under which the employee will be responsible for paying for his or her own representation (*e.g.*, non-Federal employee representative) were clarified during the meet-and-confer process and are reflected in the final regulations. They also recommended deletion of the provision that covers disallowing an individual to serve as the employee's representative, stating that the exclusion of representative standard is too broad and should not be within the discretion of the Department. We disagree with this recommendation because such procedures are necessary for the orderly and fair resolution of the action. We disagree that the standard is too broad, as the criteria are specifically related to the Department's mission.

During the meet-and-confer process, the participating labor organizations also recommended extending the reply period when the Department is considering an employee's medical condition in regard to a proposed adverse action. We disagree that extending the reply period in such situations is necessary in regulation. The 10-day reply period set forth in § 9901.714 represents a minimum and may be increased at the Department's discretion.

Commenters stated that regulations do not allow duty time for the employee to prepare a response and one commenter suggested that we clarify what is meant by a ''reasonable amount of official time'' to review the evidence. Commenters stated the regulations do not discuss whether the employee's representative will be allowed official time to assist the employee. We disagree that the regulations do not allow duty time for the employee to prepare a response. The employee may receive official time to review the Department's supporting evidence and to furnish affidavits and other documentary evidence, if the employee is otherwise in an active duty status. With regard to an employee's representative being allowed official time, the proposed regulation is essentially the same as current law.

Section 9901.716—Decision Notice

This provision outlines procedures for issuance of decision notices. During the meet-and-confer process, participating labor organizations gave alternative proposals regarding the delivery of the decision notice to the employee. One proposal recommended providing the decision notice to the employee on or before the effective date and deleting all language providing guidance if unable to deliver the notice in person. The other proposal recommended delivery by electronic mail and certified mail, return receipt requested if unable to deliver the notice in person. During the meet-and-confer process, participating labor organizations also stated that the Department had no legal authority to mail a decision letter to the last known address. We believe that in circumstances when the Department is unable to deliver the decision notice in person, there must be guidelines provided to ensure all parties understand their responsibilities; therefore, we did not delete the guidance contained in the subsection. However, in response to discussions with labor organizations during the meet-and-confer process and public comments received, the language was modified to broaden delivery methods to include mail, overnight or express delivery service or the use of a messenger service. The regulations will retain the language that the Department will deliver the decision letter to the last known address of record, if unable to deliver in person, as the method of last resort.

Section 9901.717—Departmental Record

This provision describes the Departmental Record. During the meet-and-confer process, participating labor organizations recommended that we amend this provision to be consistent

with 5 U.S.C. 7513(e) by deleting the requirement to retain documents pursuant to the General Records Schedule and the Guide to Personnel Recordkeeping. Additionally, they recommended that this provision be amended to require the retention of exculpatory evidence and any material relevant to the action. Some commenters stated that the Department should retain any information that the employee requests to be retained as a part of the official record of any adverse action. We did not revise this provision. This provision establishes sound recordkeeping procedures which are substantively the same as those in 5 U.S.C. 7513(e) except that the proposed provision provides more guidance regarding recordkeeping procedures. Any and all directly relevant evidence will be retained regardless of whether the employee requests the Department do so. One commenter suggested that notation be made in an employee's official records in cases where an employee under investigation for misconduct resigns prior to issuance of a proposal notice. The commenter argued that such documentation could prevent the future employment of an employee who might present a security risk. We do not believe such a notation, based on an ongoing investigation, would be appropriate.

Subpart H—Appeals

General Comments

Subpart H modifies current MSPB appellate procedures for certain adverse actions taken under subpart G. Such changes include establishment of streamlined appellate procedures, providing for Department review of initial decisions, limited discovery, summary judgment, and expedited timeframes. Commenters, including labor organizations participating in the meet-and-confer process, objected to the provisions in subpart H, stating that DoD does not have the authority to make changes in MSPB appellate procedures. They argued that there was no evidence that current procedural protections or the decisions of an arbitrator or MSPB jeopardize national security/defense and there is no need to improve efficiency of the MSPB process. They asserted that it is not necessary for MSPB to provide greater deference to DoD than to any other agency. We disagree. Section 9902(h) expressly authorizes the Secretary to establish an appellate process for employees covered by NSPS, including establishing legal standards and procedures, including standards for applicable relief. In addition, section 9902(d) makes waivable the current statutory requirements for the appeals process. Section 9902(b)(5) also states that the system established under section 9902(a) is not to be limited by any law or authority that is waived in the NSPS regulations. The modifications in this subpart were made following consultation with MSPB officials, as called for in the enabling statute.

In addition, some commenters argued that any modification of current rules regarding an employee's ability to make and have an allegation of discrimination reviewed was beyond the authority of NSPS. We believe these regulations do not impermissibly modify existing EEO procedures and fully retain the right of employees to have allegations of discrimination fully and fairly reviewed and adjudicated. Under these regulations, employees can raise allegations of discrimination as part of any appeal or grievance of an adverse action and, if dissatisfied with the final DoD decision, obtain full MSPB and EEOC review of such allegations.

Commenters also stated that the current personnel system already allows separation or removal to be effected rapidly if in the interest of national security under 5 U.S.C. 7532. Section 7532 is limited in its scope regarding the basis for action and employee appeal channels; therefore we don't believe it appropriately addresses the broad range of offenses and penalties that are necessary to ensure the well disciplined workforce needed to carry out the Department's mission.

Finally, many commenters objected to the Department's review of AJ decisions, questioning the neutrality and impartiality of the review process, as well as its negative impact on due process. While the Department has the authority to review initial AJ decisions, that authority will be limited to those decisions for which either party has timely filed a request for review. The Department may remand, modify or overturn the AJ's decision only based on the criteria in § 9901.807(g)(2)(ii)(B) of these final regulations.

We will continuously monitor and evaluate the appeals process to ensure that these changes are fair.

Other Comments on Specific Sections of Subpart H

Section 9901.802—Applicable Legal Standards and Precedents

These regulations state that in applying existing legal standards and precedents, MSPB and arbitrators are bound by the legal standard set forth in § 9901.107(a)(2). Section 9901.107(a)(2) provides that these regulations must be interpreted in a way that recognizes the critical national security mission of the Department. Each provision must be construed to promote the swift, flexible, effective day-to-day accomplishment of this mission as defined by the Secretary; DoD's and OPM's interpretation of NSPS regulations must be accorded great deference. During the meet-and-confer process, the participating labor organizations recommended that we delete the requirement that the MSPB consider DoD's mission when applying legal standards not inconsistent with this subpart. Some commenters also recommended DoD and OPM not be given deference in their interpretations of NSPS regulations.

The authority to require MSPB to give deference to DoD's and OPM's interpretation of NSPS regulations derives from 5 U.S.C. 9902, including section 9902(h)(3), which authorizes establishment of legal standards. It is also based on longstanding standards of legal interpretation, which provides that considerable weight be given to an agency's interpretation of its own regulations. Accordingly, we have not modified this section. We believe that the Department's and OPM's interpretation of the regulations in part 9901 must be given great deference to ensure that appropriate recognition is given to accomplishment of the Department's national security mission when appeals decisions are made. Also during the meet-and-confer process, the participating labor organizations recommended that we modify the language of this section to include references to 5 U.S.C. 2301 and 9902(h)(2) and (3). The suggested additional citations are not necessary as the law and citations noted in this subpart adequately provide for all requirements.

Section 9901.803—Waivers

This section specifies the provisions of title 5, U.S. Code, that are waived for employees covered by the NSPS appeals process established under subpart H. This section also specifies that the appellate procedures in subpart H replace those of the Merit Systems Protection Board (MSPB) to the extent MSPB's procedures are inconsistent with these regulations, and that MSPB must follow these regulations until it issues conforming regulations. Some commenters recommended we delete the reference to modification of 5 U.S.C. 7702 stating this was beyond the authority of NSPS. During the meet-and-confer process, the participating labor organizations also voiced concern that NSPS does not give DoD the authority

to waive or modify discrimination complaint procedures.

The Department's authority to modify 5 U.S.C. 7702 is found in 5 U.S.C. 9902(h), which authorizes the establishment of a new appeals process. Consistent with section 9902(h)(7), we may modify or adapt the mixed case process in these regulations, provided employee rights and remedies are preserved. The final regulations modify some of the procedures for processing mixed cases, while preserving the rights and remedies as required by § 9902(h)(7). These rights include the right to seek EEOC review of an MSPB decision in a mixed case pursuant to 5 U.S.C. 7702(b), which has not been modified. They also preserve judicial review in such cases. Consistent with the enabling legislation, these regulations assure due process and appropriately streamline the procedures of the appeals process dealing with mixed cases.

Section 9901.804—Definitions

During the meet-and-confer process, the participating labor organizations recommended that we amend or delete a number of definitions, such as ''request for review'' and ''mandatory removal offense.'' We did not accept these recommendations because the proposed changes would alter the essence of underlying procedural concepts that are critical to the successful implementation of NSPS.

Section 9901.805—Coverage

This section of the proposed regulation provided that the appeals process covers employee appeals of certain adverse actions taken under subpart G. Commenters and labor organizations participating in the meet-and-confer process suggested we add reduction in force (RIF) and demotions as covered actions. Commenters also recommended that suspensions of 14 days or less be a covered action. Commenters, as well as labor organizations participating in the meet-and-confer process, stated that exclusion of RIF actions from NSPS coverage under the NSPS appeals process contradicts § 9901.611 which states that RIF actions are appealable to the MSPB under 5 CFR 351.901. We disagree that these are contradictory. The provisions indicate that RIF actions are not included as appealable actions under NSPS but are independently appealable to the MSPB. We believe the NSPS appeal system should be limited to those actions set forth in the enabling legislation. Inclusion of additional actions (such as suspensions of 14 days or less) goes beyond the intent of the enabling legislation. ''Demotions'' in NSPS are covered by the concept of reduction in pay band (or comparable reduction), which is covered under § 9901.805(a).

One commenter recommended that we specify when appeal rights are granted or denied based on failure to maintain a condition of employment and explain why appeal rights vary depending on whether the condition of employment was specified at the time of appointment or subsequent to appointment. The applicability of appeal rights when an adverse action is based on failure to maintain a condition of employment requires an individualized assessment of an employee's status and the specific facts of the case. It is not possible to specify a broad rule that would cover all such actions.

Section 9901.806—Alternative Dispute Resolution

This section of the proposed regulations encouraged the use of alternative dispute resolution (ADR) methods to address employee-employer disputes arising in the workplace, including those which may involve disciplinary actions. The proposed regulations also recognize that these methods may be subject to collective bargaining to the extent permitted by subpart I of part 9901. During the meet-and-confer process, participating labor organizations endorsed the concept. Commenters endorsed the concept of ADR and urged a stronger statement on the use of ADR. Commenters suggested that we establish ombudsman offices at each component in order to follow the ''best practices'' noted elsewhere by the Government Accountability Office, and to facilitate resolution of disputes at the lowest possible level. We believe that the proposed regulations adequately stress the importance of ADR and have made no changes to this section.

Section 9901.807—Appellate Procedures

This section established streamlined appellate procedures and provided for such things as Department review of initial decisions, limited discovery, summary judgment, and expedited timeframes. Commenters and labor organizations participating in the meet-and-confer process stated that this section of the proposed regulations was not organized well and was difficult to follow. We agree and have reorganized the material as indicated below with the previous section designation in brackets. For example, ''9901.807(a)(1) [9901.807(a)]'' indicates that ''9901.807(a)(1)'' is the new designation in the final rules and ''[9901.807(a)]'' is the old designation in the proposed rules. Some commenters recommended that the entire section be deleted, stating DoD does not have the authority to make the changes set forth in this section. We disagree. Section 9902(h) expressly authorizes the Secretary to establish an appeals process. In addition, § 9902(d) expressly authorizes the waiver of the current statutory appeals process. Commenters noted that § 9901.807 does not include a provision for MSPB to re-open a decision of its AJs. This is consistent with the enabling legislation which limits MSPB review to the Department's final decisions which have been appealed to the Board and thus does not authorize Board reopening of initial AJ decisions. Adequate and appropriate review of AJ decisions will result from the Request for Review (RFR) and Petition for Review (PFR) processes.

Section 9901.807(a)(1) [9901.807(a)]

There was no change in this provision. It was merely redesignated.

Section 9901.807(a)(2)(i) [9901.807(b)(1)]

There was no change in this provision. It was merely redesignated. This provision of the proposed regulations is introductory in nature. The actual changes are set forth in later provisions. While there was discussion during the meet-and-confer process and comments on the system elements, we will discuss those comments in the applicable sections.

Section 9901.807(a)(2)(ii) [9901.807(b)(2)]

This provision provides that the AJ will adjudicate appeals and deliver his or her decision to each party and to OPM. During the meet-and-confer process, participating labor organizations recommended that NSPS processing rules be deleted and that the full MSPB have overall and exclusive authority in adjudicating appeals. We disagree. As written, the regulations meet the goals of ensuring appropriate deference to DoD's decisions and penalty determination in adverse actions and streamlining the way such cases are handled while continuing to preserve and safeguard employee due process protections.

Section 9901.807(a)(3) [9901.807(e)]

This provision allows OPM to participate or intervene in the appeal at any time it believes that an erroneous decision may result which will have a substantial impact on civil service law, rule, regulation or policy directive.

During the meet-and-confer process, participating labor organizations stated that this provision should be deleted. We do not agree with the recommendation, as we believe this provision is consistent with current law and is necessary for OPM to carry out its mission.

Section 9901.807(a)(4)(i) and (ii) [9901.807(g)(1) and (2)]

There were no changes in these provisions. They were merely redesignated.

Section 9901.807(a)(5) [9901.807(j)]

There was no change in this provision. It was merely redesignated.

Section 9901.807(a)(6) [9901.807(k)(1)]

This provision sets the time limit for an employee to file an initial appeal through the NSPS appeal system at 20 days. Commenters noted that EEOC regulations provide complainants 30 days to file an appeal with the MSPB after agency decision in mixed cases. Other commenters and labor organizations during the meet-and-confer process expressed concern because the employees were given less time in the appeal process. In regard to the comments on EEOC regulations, we note that the 30-day period provided in EEOC regulations simply reflects the Commission's adoption of the time limit provided in the Board's current regulations.

Section 9901.807(a)(7) [9901.807(k)(2)]

This provision covers disqualification of a party's representative at any time during the appeal process. During the meet-and-confer process, participating labor organizations stated that this provision should be deleted. Commenters stated it was not necessary to provide for procedures to disqualify a party's representative. Some commenters expressed concern that there are no listed criteria for disqualification. We believe this provision is necessary in order to ensure an orderly and fair adjudication. Decisions regarding disqualification will be at the discretion of the AJ and should be consistent (to the degree not inconsistent with these regulations) with current Board rules at 5 CFR 1201.31(b) which provide criteria under which a representative may be disqualified. One commenter requested that we clarify that Department representatives will avoid the appearance of conflict of interest, but may not be disqualified solely on the basis of having advised management on the processing of underlying matters where such advice was within the scope of their responsibilities. For purposes of these regulations, we believe the proposed language adequately covers the disqualification issue.

Section 9901.807(b) [9901.807(k)(4)]

This provision allows the AJ to suspend processing a case only if jointly requested by the parties. During the meet-and-confer process, participating labor organizations recommended that a joint case suspension request requirement be deleted. Commenters recommended allowing the AJ to suspend the case if a single party shows good cause since appellants might need extra time to hire an attorney or locate witnesses. We believe the proposed regulations provide sufficient time to prepare a case, provide an appropriate means to suspend a case, and comport with the goals of NSPS. No changes have been made to this section.

Section 9901.807(c)(1) and (2) [9901.807(i)(1) and (2)]

These provisions discuss settlements. They prohibit the presiding MSPB AJ from requiring settlement discussions. Where the parties agree to participate in formal settlement discussions, these discussions will be conducted by an official other than the presiding AJ. During the meet-and-confer process, participating labor organizations recommended deletion of § 9901.807(i)(1). Commenters were in favor of settlement discussions; however, some believe that the proposed regulations do not encourage such discussions. Some commenters stated that settlement discussions being conducted by the presiding AJ allows the AJ latitude in this area to facilitate settlement and eliminate additional formal settlement procedures. The regulations do encourage settlement; however, we believe strongly that settlement should be completely voluntary and based on the parties' individual interests. Also, we believe that settlement proceedings should be conducted by an official who is not adjudicating the case to avoid actual or perceived conflicts of interest on the part of MSPB adjudicating officials. We have made no change in this section.

Section 9901.807(d)(1), (2), and (3) [9901.807(k)(3), (i), (ii), and (iii)]

These sections modify discovery procedures by placing limits on the extent of discovery. During the meet-and-confer process, participating labor organizations stated that the limits are too restrictive and may be easily abused. Commenters stated the limits would prevent adequate methods to gather evidence necessary for the case and that the limits are arbitrary, placing the employee at a disadvantage. Commenters stated the regulations are unfair, hamper due process, and limit employee defense. We believe these limits will usually allow adequate methods for discovery of evidence, are fair, and do not violate due process. Additionally, we have clarified in these regulations that the AJ may grant additional discovery for necessity and good cause. One commenter requested that we clarify whether the new limitations on discovery replace or augment the existing motion to compel process. To the extent existing rules on discovery, including provisions regarding motions to compel process, are inconsistent with these new limitations on discovery, the existing provisions are modified. Another commenter requested that we limit the number of all requests for production to a total of 50 per case. The regulations already limit the number of requests for production to 25 per pleading. However, the AJ may grant a party's motion for additional discovery upon a showing of necessity and good cause. We believe that this provides appropriate limits on requests for production while providing an avenue for additional discovery if appropriate. Therefore, we choose not to adopt the suggestion.

Section 9901.807(e)(1), (i), (ii), and (iii) [9901.807(d)(1), (i), (ii), and (iii)]

These provisions describe the standard of proof, which must be met by the Department for a decision to be sustained. Preponderance of the evidence is the single standard of proof under NSPS. Commenters have stated the burden of proof for employees has been increased; however, this is inaccurate. The only change in the level of proof is that the regulations adopt a single burden of proof—preponderance of the evidence—for cases based on performance and/or misconduct. (Under current law, agencies must only meet a substantial evidence burden of proof in performance cases taken under chapter 43 of title 5. This is a lower burden than preponderance of the evidence.) The burden remains the same for an appellant. Other commenters stated that the differences between conduct and performance should be acknowledged by maintaining the previous standard (''substantial evidence'') for performance cases. We do not believe the differences warrant different standards and note that under current title 5 provisions, actions taken under chapter 75 based on unacceptable performance are subject to the higher standard of proof. The single (''preponderance'') standard for all

cases, whether taken for reasons of performance, or conduct, or a combination of both, simplifies the appeals process and assures consistency without compromising fairness or burdening the employee. No changes have been made to these provisions.

Section 9901.807(e)(2) [9901.807(k)(5)]

This provision covers the AJ's ability, when some or all materials facts are not in dispute, to issue an order to limit the scope of the hearing or issue a decision without holding a hearing. During the meet-and-confer process, participating labor organizations stated that they accepted the use of summary judgment where the facts of the case are not in dispute; however, they recommended the AJ not be able to render such a decision on his or her own initiative. They also recommended that credibility determinations should not be made absent a hearing. Commenters stated that the burden of proof for the employee has been increased before the employee is allowed a hearing. Other commenters stated a hearing should be held if a material fact is in dispute and there is a credibility question. Some commenters also stated summary judgments have not worked in other forums. Additionally, there were concerns that the employee entitlement to a hearing has been diminished. We did not revise this provision. We believe that the AJ should have the authority to rule in this area on his or her own initiative when some or all material facts are not in dispute. Allowing summary judgment when no material facts are in dispute eliminates the requirement for unnecessary and time-consuming hearings, expediting the process for both parties. Similarly, when a hearing is appropriate, limiting the scope of such hearing to matters in dispute serves the interests of all parties. Both of these measures will streamline the appeals process without compromising due process. Summary judgments are a well-established and effective way of fairly handling cases where material facts are not in dispute. When material facts *are* in dispute, the normal hearing process will be followed.

Section 9901.807(f)(1) [9901.807(k)(7)]

This provision covers the 90-day time limit in which an AJ must make an initial decision. During the meet-and-confer process, participating labor organizations stated that they accepted expediting the process to require that decisions be issued within 90 days by the MSPB AJ. Commenters expressed concern these time limits, with no provisions for extension, will result in inadequate time for case preparation, settlement discussions, and discovery, and fail to take into account unavoidable witness unavailability. Other commenters suggested that this section be modified to require AJs to issue decisions within 30 or 45 days of the last day of a hearing, or the last written response to a summary judgment motion. We did not revise this provision as we believe the 90-day time frame provides ample time for the AJ to make a fair decision and for appropriate pre-hearing and witness arrangements. The new time frame also facilitates the efficient and expeditious resolution of an appeal without impairing due process protections.

Section 9901.807(f)(2)(i)–(v) [9901.807(k)(6)]

These provisions cover mitigation of a penalty and require great deference to the Department's penalty determination. While mitigation is allowed, it is allowed under a limited standard. The labor organizations participating in the meet-and-confer process objected to the deference being shown to the Department in penalty determination and the wholly without justification mitigation standard. They further stated that the proposed language placing a standard for review on the full MSPB is not permissible and stated that the fact finder or reviewing entity should consider the factors as set forth in *Douglas* v. *VA,* 5 MSPR 280, 305–06 (1981), in determining whether the proposed penalty is appropriate. We also received numerous comments expressing concern regarding the mitigation standard of wholly without justification and the appearance that the Department will have to meet a lower threshold to sustain the penalty. Commenters expressed concern that MSPB has less latitude to modify decisions and protect employee rights. Commenters objected to the fact that adjudicators would be required to give deference to the Department's penalty determination. Based on these comments and concerns we have reconsidered this provision and have removed the full MSPB from coverage by this standard. The standards for review for the full MSPB are provided in 5 U.S.C. 9902(h)(5). We will also consider placing pertinent circumstances in an implementing issuance to be used for consideration in penalty determination. Furthermore, we agree to revise the ''wholly without justification'' standard for MSPB AJs that are used as part of the Department's appeals process, as well as arbitrators. Since § 9901.922(f)(2) broadly provides that arbitrators hearing a matter appealable under 5 U.S.C. 7701 or subpart H are bound by the rules in part 9901 (which include the standard for mitigation), we have deleted the references to arbitrators in § 9901.807(f)(2) as superfluous. The standard has been revised to preclude mitigation except when the action is ''totally unwarranted in light of all pertinent circumstances.'' This standard is similar to that recognized by the Federal courts and is intended to limit mitigation of penalties by providing deference to an agency's penalty determination. The Department has statutory authority to establish new legal standards. (See 5 U.S.C. 9902(h)(2).) In this case, the Department is electing to adopt a legal standard that meets the need of the Department by ensuring deference is provided to the Department's penalty determinations along with the requirement that AJs give consideration to the Department's national security mission. The Department bears full accountability for national security; therefore, it is in the best position to determine the most appropriate penalty for misconduct or unacceptable performance. In the past, MSPB has exercised considerable latitude in modifying agency penalties, sometimes to the detriment of DoD's mission. The MSPB AJ and arbitrator may still mitigate penalties for all types of offenses, except mandatory removal offenses. The intent is to restrict the breadth of their discretion to mitigate penalties to only those situations where the penalty is totally unwarranted in light of all pertinent circumstances. When mitigating a penalty, MSPB AJs and arbitrators must apply the maximum justifiable penalty, using the applicable agency table of penalties or other internal guidance.

Section 9901.807(f)(3) and (4) [9901.807(d)(2) and (3)]

These provisions cover the review of charges and performance expectations. They provide that neither the MSPB AJ nor the full MSPB may reverse the Department's action based on the way in which the charge is labeled or the conduct characterized, provided the employee is on notice of the facts sufficient to respond to the factual allegations of the charge. Similarly, an MSPB AJ or full MSPB may not reverse the Department's action based on the way a performance expectation is expressed, provided the performance expectation would be clear to a reasonable person. The labor organizations participating in the meet-and-confer process stated that the AJ or the full Board should have the authority to consider the way in which the charge

is labeled, the conduct is characterized, or the way the performance expectation is expressed in determining whether the agency's penalty is appropriate. We received many comments stating that the elimination of the requirement to clearly articulate the charge is unfair, does not provide the employee sufficient information to prepare a defense, and should not be permitted. Other commenters expressed concern over whether the AJ would be allowed to mitigate the penalty if the AJ found that the stated charge was mischaracterized or mislabeled. These commenters also questioned whether ''factual allegations'' meant the same as ''basis for the action.'' We did not revise this provision, as we believe that as long as the employee has sufficient notice to respond to the allegations of a charge, the Department will have complied with the notice and due process requirements of these regulations. The Department must prove by preponderance of the evidence that an action taken against an employee promotes the efficiency of the service. Mitigation may also be appropriate in such cases provided it meets the standards established in these regulations. Additionally, this section requires that performance expectations be clearly conveyed in a manner understandable to a ''reasonable person.'' MSPB AJs and the full MSPB will judge the Department's expression of performance expectations by a ''reasonable person'' standard. These provisions are written to eliminate overly technical and legalistic aspects of the current appeals process, while preserving employees' due process rights.

Section 9901.807(f)(5), (i) and (ii) [9901.807(c), (1) and (2)]

These provisions covered the granting of interim relief. They stated the full MSPB may not grant interim relief until after the Department's final decision. During the meet-and-confer process, participating labor organizations recommended that interim relief be granted by the full MSPB as a matter of course if the AJ finds in favor of the appellant. We received comments stating that the enabling legislation does not specifically allow DoD to limit the full MSPB's authority to grant interim relief in this way. Commenters also stated this limitation might impermissibly alter EEO procedures. Commenters, including labor organizations during the meet-and-confer process, stated DoD should not have discretion to temporarily place an employee in a different position when interim relief is ordered by the full MSPB. Commenters also questioned what the employee's pay status would be while on excused absence. Other commenters recommended we allow the AJ to grant interim relief or, in the alternative, establish a procedure for interlocutory appeal to allow a stay until the Board hears the full case. Commenters objected to attorney fees not being paid until a final MSPB decision. We believe the limitation on the AJs' authority to grant interim relief is necessary. In addition, it is consistent with the enabling legislation, which prohibits granting interim relief unless it is specifically ordered by the full Board (5 U.S.C. 9902(h)(4)). It is premature for the AJ to grant interim relief when DoD has filed a request for review. To provide for the efficient accomplishment of the mission and to avoid disruption in the workplace, DoD should have discretion in determining the placement of an employee during the period of interim relief. Explanation of the pay status of employees in a period of excused absence is not required because, by definition, excused absence is an absence from duty without loss of pay and without charge to leave. Finally, the provision relating to attorney fees represents no change from current law.

Section 9901.807(f)(6)(i) and (ii) [9901.807(h)(1) and (h)(2)]

These provisions of the proposed regulations established a new standard for recovering attorney fees, which was intended to simplify the process. Comments received on the proposed regulations and labor organizations, during the meet-and-confer process, argued that the new standard was unreasonable, unfair, would discourage employees from challenging wrongful terminations, violated the Back Pay Act, and would result in uneconomical, piecemeal litigation. After consideration of these comments, we have revised the NSPS regulations to retain the pre-NSPS statutory standard under which such fees may be awarded; therefore, all objections to proposed changes have been addressed.

Section 9901.807(g) [9901.807(k)(8)]

This provision covers the procedures utilized to arrive at the Department's final decision in appeals of adverse actions. Commenters, and participating labor organizations during the meet-and-confer process, stated that the provisions for the RFR process and the Department's review of AJ decisions should be deleted from the regulations. Commenters also recommended simplifying the process and placing deadlines in the Department's review of AJ decisions. Further, commenters stated that the RFR process is unwarranted, fails to preserve due process protections, and detracts from the goals of streamlining the appeals process. These provisions will not be deleted from the regulations. Though somewhat detailed, the Secretary is expressly authorized by 5 U.S.C. 9902(h) to establish an appeals process. The process contained in this regulation is necessary to assure that the Department's national security mission is appropriately considered in adverse action appeals decisions. The Department will be constrained in the exercise of this authority by the provisions of § 9901.807(g)(2)(ii). We anticipate that relatively few cases will be reviewed by the Department under this authority.

Section 9901.807(g)(1) [9901.807(k)(8)(i)]

This provision covers who will receive and act on an RFR. During the meet-and-confer process, participating labor organizations stated that the proposed regulations did not specify the official who would remand, modify, or reverse the MSPB AJ's initial decision. We also received comments regarding the extension of the strict time frames within the NSPS appeals process. DoD will establish the process for receiving and acting on an RFR, including time limits for the Department to take action on an RFR, in implementing issuances. We have clarified that in light of the expedited time frames in the appellate process, an extension for the request for review will be granted if a good reason for the delay is shown.

Section 9901.807(g)(2)(i), (ii), (A), (B) and (C) [9901.807(k)(8)(ii), (iii), (A), (B), and (C)]

These provisions cover the RFR process where, under limited circumstances, the Department may affirm, remand, modify, or reverse an AJ's initial decision for which an RFR has been filed. Commenters and labor organizations during the meet-and-confer process stated that this review authority is arbitrary, capricious and a violation of due process. Comments were received regarding additional complexity, expense, and length added to the appeal process by the internal DoD review. We agree that the internal appellate process must be credible and preserve due process. It preserves due process for reasons stated in the general comments on adverse actions and appeals. To that end, the Department is committed to establishing an internal entity that adheres to merit system principles. This process provides the Department the necessary authority to

review initial AJ decisions to ensure that such decisions interpret NSPS and these regulations in a way that recognizes the critical mission of the Department and to determine which of those cases are of a precedent-setting nature. Although the process may be lengthened in some aspects, we have gained efficiencies and mission-related benefits in other areas that more than offset any potential increases in time or costs at any step of the process. Moreover, we anticipate relatively few cases will be reviewed by DoD, since DoD may reverse or modify initial AJ decisions only under the limited criteria specified in § 9901.807(g), thus minimizing any increase in processing time.

Some commenters questioned two of the bases for modifying or reversing an AJ decision: The Department's national security mission and conflict with Governmentwide rules. These commenters stated that impact on national security mission alone, regardless of the appellant's guilt or innocence, would not be grounds to modify or reverse an AJ decision. The second point the commenters made was that the Department lacked expertise to interpret Governmentwide regulations. We recognize that the wording of the regulation regarding the Department's modification or reversal of an AJ's decision based on national security fails to specifically reference the employee's guilt or innocence. However, an employee's culpability is a prerequisite to sustaining an action. Additionally, the requirement for all actions to promote the efficiency of the service and further review by the full MSPB provide additional safeguards for employees. We believe the Department has sufficient expertise to determine compliance with Governmentwide regulations.

Lastly, we received comments regarding vague remand provisions and lack of time for the AJ to make a decision if a summary judgment was remanded with a direction to hold a hearing. We will establish timelines and remand provisions for the Department's review of the AJ's decision in an implementing issuance. Further, we have revised the regulation to allow the AJ more time, 45 days versus 30 days, to make a decision in those instances where they are directed to hold a hearing in a case involving summary judgment.

Section 9901.807(g)(3)(A) and (B) [9901.807(k)(8)(ii), (A) and (B)]

This provision covers the precedential effect of a Department decision. Commenters and labor organizations participating in the meet-and-confer process stated that the Department should not be allowed to determine which cases would set precedent, and they recommended revising the regulation to state that any AJ decision is precedential unless it is reversed or modified by the full MSPB. Commenters stated that Departmental decisions should be considered precedential even if subsequently overturned by the full MSPB. We believe the Department should be able to determine that some Department decisions are important enough to serve as precedent even though not acted upon by the full MSPB. Further, we believe that the Department must be governed by the rulings of the full MSPB, if the Department's decision is reversed or modified by the full MSPB, unless overturned by a court.

Section 9901.807(g)(4) [9901.807(k)(8)(ii)]

This provision covers the publication of precedential decisions. During the meet-and-confer process, participating labor organizations stated that there were not any details regarding the publication of decisions. Commenters echoed this concern. We agree with the labor organizations and have added clarifying language regarding publication of DoD precedential decisions, the details of which will be provided in implementing issuances.

Section 9901.807(h)(1) [9901.807(f)]

This provision provides for filing for a Petition for Review by a party or the Director of OPM. During the meet-and-confer process, participating labor organizations stated that the Department should delete the provision which allows OPM to petition MSPB for review. We disagree. While OPM is responsible for providing guidance and assistance to DoD in developing a new human resources management system, it also has responsibility for protecting Governmentwide institutional interests regarding the civil service system. Therefore, we believe that OPM must have the authority to act if it believes a decision will have substantial impact on civil service law, rule, regulation, or policy directive. One commenter requested that we clarify whether this provision eliminates MSPB's right to reopen an appeal on its own motion. In accordance with § 9901.807, MSPB may only review those decisions for which a petition for review has been filed by the Department, OPM, or an employee.

Section 9901.807(h)(2)(i), (ii), and (iii)(A)(B)(C) and (iv) [9901.807(k)(9) and (10)]

These provisions cover the petition for review process to the full MSPB. Further, these provisions cover the standards for the full MSPB review as stated in 5 U.S.C. 9901(h). During the meet-and-confer process, participating labor organizations accepted expediting the process to require decisions be issued within 90 days by the full MSPB. However, these provisions have been clarified by including the review standards as stated in 5 U.S.C. 9901(h).

Section 9901.807(h)(3) [9901.807(k)(11)]

This provision covers OPM's request for reconsideration of an MSPB decision. During the meet-and-confer process, participating labor organizations recommended that this provision be deleted. We did not accept this recommendation because this provision is consistent with current law. This provision is necessary for OPM to carry out its mission, which includes protecting Governmentwide institutional interests regarding the civil service system.

Section 9901.807(h)(4) [9901.807(l)]

This provision addresses the failure of MSPB to meet established deadlines and the reporting requirements. Commenters recommended that this reporting requirement be deleted while other commenters recommended that MSPB submit quarterly or annual reports. We did not accept the recommendations to change the provisions as we consider the timelines placed on MSPB as being an integral part of streamlining the Department's appellate process. This reporting requirement is only imposed if a deadline is missed. We are confident that MSPB will rarely, if ever, fail to meet the required deadlines. As a result, any report required by this provision will rarely be necessary.

Section 9901.807(i) [9901.807(m)]

This provision covers the Department's authority to seek judicial review of MSPB decisions. We made a technical correction to delete the reference to the Department seeking reconsideration by MSPB of a final MSPB decision because the Department has that ability under current MSPB rules.

Section 9901.808—Appeals of Mandatory Removal Actions

This provision covers appeals of mandatory removal actions (MROs). It states that only the Secretary may mitigate the penalty for a sustained MRO. Additionally, it states that if the

MSPB AJ or the full MSPB sustains an employee's appeal based on a finding that the employee did not commit an MRO, the Department is not precluded from subsequently proposing an adverse action based in whole or in part of the same or similar evidence. During the meet-and-confer process, participating labor organizations stated that this provision should be deleted in its entirety. Commenters and labor organizations in the meet-and-confer process stated that the Secretary should not be the only authority to mitigate MROs and that limiting the full Board's ability to mitigate MROs is contrary to the enabling legislation. Commenters also stated that the proposed provisions inappropriately give DoD ''two bites at the apple'' when an action is not found to amount to an MRO since the Department may take a subsequent action on the same evidence. Other commenters were concerned that an employee might not be entitled to attorney fees even if the employee prevailed on the MRO issue, but failed in prevailing in a subsequent action based on the same facts. We disagree that this provision should be deleted. The Secretary is expressly authorized under 5 U.S.C. 9902(h) to establish appeals procedures and standards for relief, including standards for mitigation of penalties. This process is necessary to support the national security mission of the Department. We do agree, however, that the enabling legislation allows mitigation of MRO penalties by the full MSPB and have modified the provision accordingly. We disagree that it is inappropriate for the Department to have the ability to take a subsequent action if the offense is found to not be an MRO. Though an employee's misconduct may not be found to qualify as an MRO, it does not mean that the misconduct should not be addressed. Subsequent proposal of an adverse action based in whole or in part on the same or similar evidence is consistent with what can occur today under current law. Finally, we believe attorney fees will be fairly awarded based on the latest change to these regulations.

Section 9901.809—Actions Involving Discrimination

This provision outlines the processes for handling appeals of actions in which discrimination is alleged. During the meet-and-confer process participating labor organizations stated that this provision should be deleted because it inappropriately modifies processes for discrimination claims. We disagree. Section 9902(h) expressly authorizes the Secretary to establish legal standards and procedures for employee appeals. Consistent with section 9902(h)(7), we may modify or adapt the mixed case process in these regulations, provided employee rights and remedies are preserved. The final regulations modify some of the procedures for processing mixed cases, while preserving the rights and remedies as required by section 9902(h)(7).

Some commenters stated this provision is unclear and suggested that we delete the provision or rewrite it. Several commenters stated that the provision should be modified to eliminate potential confusion over language that appears to require the Department to forward to MSPB a non-appealed action. We agree with this comment and have amended the regulations to provide that an appellant may choose to pursue his or her allegation of discrimination even when no PFR is filed with the Board. In such cases, the appellant can request the Department to refer the discrimination issue to the Board, the Board will then issue a final decision on the discrimination allegation which may then be pursued to EEOC or district court. Some commenters recommended we delete the reference to modifying 5 U.S.C. 7702 stating this was beyond the authority of NSPS. We believe the proposed regulations do not impermissibly modify existing EEO rights and remedies. To clarify this section, we have modified some of the proposed language without altering any of the proposed intent.

Subpart I—Labor-Management Relations

General Comments

Commenters, including, labor organizations participating in the meet-and-confer process, objected to subpart I in its entirety arguing that Congress did not authorize the Secretary and Director to modify 5 U.S.C. 71 beyond providing for bargaining above the level of unit recognition and the establishment of a new independent third party to review and resolve labor management disputes. We disagree. In enacting chapter 99, Congress expressly recognized the need for the Department to design a labor relations system that both addresses the unique role that the Department's civilian workforce plays in supporting the Department's national security mission and allows for a collaborative issued-based approach to labor management relations. The labor relations system established in subpart I does this by creating a new, tailored approach to labor relations. While the scope of bargaining is reduced in some areas, such as management rights, to enable the Department to better utilize its civilian workforce to support rapidly changing national security challenges, such as the Global War on Terrorism and supporting humanitarian assistance missions here and abroad, employee representatives are given opportunities to participate in new areas that have a substantive impact on the daily lives of the workers they represent. However, through continuing collaboration (§ 9901.107), employee representatives will have the opportunity to participate in the planning, development, and implementation of the Department's implementing issuances, which will cover subjects ranging from the pay and performance management systems to staffing and classification.

The labor relations system is consistent with the general parameters Congress provided, including the process for involving employee representatives (see 5 U.S.C. 9902(m)(3) and (4)). It mandated that the new system may not *expand* the scope of collective bargaining beyond the scope of bargaining available today under chapter 71, even where provisions of title 5 are waived or waivable (5 U.S.C. 9902(m)(7)), and required that employees be authorized to organize and bargain collectively within the framework established in chapter 99, that is, within the framework of a system that promotes a collaborative issue-based approach to labor relations and which is developed, established, and implemented to enable the Department's civilian workforce to better support the Department's national security mission (5 U.S.C. 9902(b)(4)).

These commenters also argued that there is no legal authority to invalidate provisions in collective bargaining agreements with implementing issuances or issuances. Again, we disagree. First, Congress authorized the Department to establish and implement the HR system by providing an alternative to collective bargaining for involving employee representatives in the planning, development, and implementation of that system and making this the exclusive process for their involvement (5 U.S.C. 9902(f)). It would be impossible to implement the HR system authorized by Congress without overriding conflicting provisions of existing collective bargaining agreements.

Moreover, in taking the steps necessary to establish and adjust the labor relations system, Congress specifically recognized that the provisions of this system will supersede existing collective bargaining agreements covering Department employees and negotiated pursuant to

the provisions of chapter 71 except as otherwise determined by the Secretary (5 U.S.C. 9902(m)(8)). The proposed regulations stopped well short of this authority by providing for a process that would not supersede collective bargaining agreements in their entirety. Instead, the proposed regulations provided a much more constrained approach, providing only that those specific provisions of collective bargaining agreements conflicting with these NSPS regulations or NSPS implementing issuances would be superseded. This very narrow authority is essential to enable the Department to establish and implement one NSPS across the Department. Absence of this authority would effectively defeat the intent of Congress by denying the Department the ability to have a single HR system to support the Department's national security mission.

During the meet-and-confer process, it became clear that there was confusion over which type of issuance would supersede conflicting provisions of collective bargaining agreements. Some commenters, and labor organizations participating in the meet-and-confer process, recommended that collective bargaining agreements should not be superseded before their expiration. Participating labor organizations effectively argued that the Department did not need the authority to immediately supersede collective bargaining provisions with issuances not implementing NSPS. We agree and have amended the final regulations to provide that conflicting collective bargaining agreement provisions will not immediately be superseded by issuances, although such provisions must be brought into conformance with the issuance upon expiration of the agreement or renegotiation of the provision during the term of the agreement.

However, to ensure consistent implementation of NSPS across organizations with representation by different bargaining units, we continue to believe that implementing issuances must take effect immediately and thus supersede any conflicting provisions of collective bargaining agreements for NSPS-covered employees. While DoD plans to implement the labor relations system DoD-wide immediately, the HR system will be implemented in spirals. The implementing issuances for the HR system will only apply to employees who are covered by the NSPS HR system.

Commenters, including labor organizations during the meet-and-confer process, also recommended that the design and implementation of every aspect of the proposed NSPS, including the pay, performance, and classification system and appeals process, be subject to collective bargaining. Congress expressly prohibited expanding the scope of collective bargaining in 5 U.S.C. 9902(m)(7) which provides that nothing in section 9902 will be construed to expand the scope of bargaining with respect to provisions in title 5 that may be waived, modified, or otherwise affected under section 9902. In lieu of bargaining, Congress charged OPM and DoD to establish the mechanism for continuing involvement of employee representatives in 5 U.S.C. 9902(f)(1)(d) and (m)(2). With this in mind, we provided a number of mechanisms to ensure the substantive involvement of labor organizations in such things as the development of implementing issuances, the administration of the Department's new pay system, and the nomination of members to the National Security Labor Relations Board (NSLRB or Board). Other concerns related to the scope of bargaining are addressed in the discussion of the related sections of subpart I that follow.

We also expressly provided two specific mechanisms to address the mandate that the labor relations system should allow for a collaborative, issue-based approach to labor relations. National level bargaining, as provided for in this regulation, and which is expressly authorized in the enabling legislation (5 U.S.C. 9902(g)), allows for an issue-based approach to addressing matters of significance to the Department as a whole. Multi-unit bargaining, as provided for in these regulations, allows for a collaborative, issue-based approach to addressing matters of interest to specific communities of interest within DoD, such as military installations that house multiple organizations and multiple bargaining units.

Other Comments on Specific Sections of Subpart I

Section 9901.901—Purpose

The proposed regulation restates the enabling legislation's purpose to provide DoD and OPM with a labor-management relations system that addresses the unique role that Department employees have in supporting the Department's national security mission and to promote a collaborative issue-based approach to labor management relations. In their comments and during the meet-and-confer process, participating labor organizations recommended that we include in this section a statement that labor organizations and collective bargaining are in the public interest, consistent with the enabling legislation's preservation of collective bargaining rights.

We have decided to retain the originally proposed language, while adding an express reference to the collaborative issued-based approach authorized by the enabling legislation. This section of the regulations recognizes and stresses the fundamental purpose underlying the enabling legislation and the statutory mandate to build a flexible HR system that supports the unique mission of DoD and the role of DoD civilian employees as a critical part of the Department's Total Force. Consistent with the enabling legislation, the labor relations system specifically recognizes the right of employees to organize and bargain collectively subject to limitations established by law, including these regulations, applicable Executive orders, and any other legal authority.

Section 9901.902—Scope of Authority

A number of commenters, including labor organizations participating in the meet-and-confer process, presented their views that the enabling legislation did not authorize the Department and OPM to modify provisions of 5 U.S.C. chapter 71. We disagree. The enabling legislation authorizes the Secretary, together with the Director, to establish and adjust a labor relations system in support of the overall HR system notwithstanding the provisions of the current system, as set forth in chapter 71 (5 U.S.C. 9902(d)(2) and 5 U.S.C. 9902(m)(1) and (2)). In addition, as discussed in *General Comments,* Congress provided the parameters for that system, including, for example, prohibiting the expansion of the scope of bargaining; requiring that the system address the unique role that the Department's civilian force work plays in supporting the Department's national security mission; authorizing the system to allow for a collaborative issue-based approach to labor management relations; requiring that employees be authorized to bargain collectively, as provided for in chapter 99 (not as provided for in chapter 71); mandating that the system provide for third party review of decisions; and authorizing the system to utilize national level bargaining (an authority separately established in 5 U.S.C. 9902(g)).

Section 9901.903—Definitions

In their comments and during the meet-and-confer process, participating labor organizations recommended that the current definition of ''conditions of

employment'' be expanded to include the classification of any position. A number of commenters, including labor organizations participating in meet-and-confer process, also recommended that we modify the definition of conditions of employment to eliminate the exclusion of pay. As a general matter, the classification or pay of Federal employees is not subject to negotiation today. This restriction is consistent with the prohibition on any expansion of the scope of bargaining in 5 U.S.C. 9902(m)(7). Therefore, we have not adopted this suggestion.

Some commenters, including labor organizations participating in meet-and-confer process, also raised concerns that the revised definition of ''confidential employee'' was overbroad and could be subject to misapplication. They recommended that we retain the definition of ''confidential employee'' contained in 5 U.S.C. 7103. We agree with the recommendation and have modified the regulation accordingly.

During the meet-and-confer process, the impact of issuances on the collective bargaining process and existing collective bargaining agreements was discussed. During these discussions it became apparent that there was confusion surrounding the distinction between ''implementing issuances'' and ''issuances.'' To address these concerns, we have modified the definitions, including the definition of ''implementing issuance'' as it appears in subpart A. In addition, we have cross-referenced the definitions of both ''issuance'' and ''implementing issuance'' that appear in subpart A so that the differences in the two types of issuances will be readily apparent.

The labor organizations participating in the meet-and-confer process expressed concerns that any manager could simply sign an issuance or implementing issuance and thereby invalidate legitimate provisions of a collective bargaining agreement. They recommended that we restrict the authority to sign such issuances to the Secretary or Deputy Secretary alone. We believe that restricting this authority to the Secretary or Deputy Secretary is far too restrictive for such a large and diverse Department. Therefore, we have revised the language to make clear that only the Secretary, Deputy Secretary, Principal Staff Assistants, or Secretaries of the Military Departments may sign an ''implementing issuance.'' In addition, we have revised the language to make clear that only these same officials may sign an ''issuance,'' which may limit the scope of collective bargaining as provided for in this regulation. This is a very high level of approval and requires extensive coordination within the Department. We believe that this change addresses the legitimate concerns of the commenters while providing the Department the necessary flexibility to meet changing national security requirements and to efficiently manage its workforce.

A number of commenters and labor organizations participating in the meet-and-confer process recommended that we not change the definition of ''supervisor'' with regard to nurses and firefighters. We agree, and have revised the definition of ''supervisor'' as it relates to firefighters and nurses to be consistent with what is in chapter 71 today. Commenters also expressed a range of concerns regarding the portion of the definition of ''supervisor'' dealing with supervision of members of the armed forces. A number of commenters questioned if the intent was that military technicians who supervise members of the reserves, such as on drill weekends, would be considered supervisors. While we believe this language is clear, the comments lead us to believe that it has been misunderstood. This provision only affects civilian employees and was intended to apply to those situations where a civilian is exercising supervisory control over military members. With regard to military technicians who are required to hold military reserve positions in addition to their civilian positions, this definition would only be applicable while serving in their civilian capacity. Thus, an individual who is not a supervisor in his or her civilian status, but supervises reservists while in military status, would not meet the definition of ''supervisor'' for purposes of subpart I. If an individual is exercising supervisory duties and authorities over military personnel, as defined in the regulation, we believe that individual is a member of the management team, and his or her inclusion within a bargaining unit would create an inherent conflict of interest. Therefore, we have retained that portion of the definition of ''supervisor'' with respect to the supervision of members of the armed forces.

Section 9901.904—Coverage

During the meet-and-confer process, the participating labor organizations recommended that the labor relations system be phased in spirals like the HR system rather than implemented concurrently Department-wide. In fact, the participating labor organizations asserted that the requirement to phase in the HR system was equally applicable to the labor relations system. We disagree. The provisions authorizing the establishment of a labor relations system (5 U.S.C. 9902(m)) are clearly separate from the authority to establish an HR system (5 U.S.C. 9902(a)) and the requirement for phased implementation in 5 U.S.C. 9902(l) is not applicable to the labor relations system. We have therefore not adopted this recommendation.

We also received comments that certain groups of employees were unique and therefore should not be covered by the labor relations system. Specifically, commenters suggested that teachers should be excluded from coverage as they do not play a combat support role and already sign mobility agreements giving management all the flexibility it needs. We disagree. Their contributions in teaching the children of our service men and women and the civilian employees who support them are absolutely critical to the successful accomplishment of the Department's national security mission. Thus, the final regulations continue to cover teachers in the labor relations system. Another group of employees that commenters recommended for exclusion from the labor relations system based on their unique characteristics are employees covered under the Civilian Mariner or CIVMARS program. While we agree that some of the rules governing these employees are unique within the Department, these employees are presently covered by chapter 71. Given that fact, we find no compelling argument that these employees should not now be covered under the labor relations provisions of these regulations and we have therefore not adopted the recommendation.

Some commenters, including participating labor organizations, stated that there was no indication in the proposed regulations that DoD or OPM responded to the intent of Congress that ''in designing the labor relations system the Secretary should take into consideration the unique requirements and contributions of public safety employees in supporting the national security mission of the Department.'' The commenters are referring to the Conference Report on H.R. 1588, the ''National Defense Authorization Act for Fiscal Year 2004,'' H. Rpt. 108–354, page 760. While the proposed regulations were silent regarding this provision in the conference report, we have taken into consideration the unique requirements and contributions of public safety employees in supporting the national security mission of the Department. The role of public safety employees was considered throughout the design process for the

labor relations system. While we agree that these employees are unique within the Department, they are presently covered by chapter 71 and we found no compelling reason that these employees should not now be covered under the labor relations provisions of these regulations.

Section 9901.905—Impact on Existing Agreements

Commenters, including labor organizations participating in the meet-and-confer process, expressed concern that Congress did not intend the Department to have the authority to supersede valid provisions of collective bargaining agreements through the promulgation of implementing issuances and issuances. These commenters argued that conflicting provisions of collective bargaining agreements should remain intact until renegotiated regardless of the extension of a new Department policy through implementing issuances or issuances. We disagree with respect to ''implementing issuances,'' but agree as to ''issuances,'' for the reasons explained under *General Comments*. We have added a new subparagraph, § 9901.905(c) to make clear that any provision of a collective bargaining agreement that is inconsistent with issuances that do not implement NSPS will remain in effect until the expiration, renewal, or extension of the agreement, whichever occurs first.

Commenters also expressed concern that 60 days is not sufficient time to bring into conformance the remaining negotiable provisions of a collective bargaining agreement, following invalidation as authorized by § 9901.905 of the regulations. We disagree. This bargaining will be limited to only those specific contract provisions that are rendered unenforceable, or require changes to their language to conform to the implementing issuance or these regulations. Therefore, we believe that 60 days is sufficient time for bargaining, given the limited scope. For these reasons, we have not adopted the recommended changes.

We received several comments that this section is confusing. We agree with these comments and have revised the language in § 9901.905(b) to make clear that it is only those collective bargaining agreement provisions that are directly affected by the collective bargaining agreement provisions rendered unenforceable by this regulation or an implementing issuance that must be brought into conformance.

We have also substantively modified the provisions in § 9901.905(b) in response to concerns raised during the meet-and-confer process that the language in the proposed regulations would have the effect of forcing the parties to wait until expiration of the 60-day period to seek assistance with any bargaining impasse. We agree with this concern and have modified the language in the final regulation to permit the parties to utilize § 9901.920 impasse procedures to obtain assistance at any time.

Section 9901.906—Employee Rights

Commenters recommended that we delete this section as it is essentially identical to 5 U.S.C. 7102 and, thus, unnecessary. We disagree. Although this provision is essentially the same as the chapter 71 provision, we believe that it is important to clearly restate these rights in subpart I to provide employees notice of their statutory rights. Therefore, we have not adopted the recommended change.

Section 9901.907—National Security Labor Relations Board

Commenters raised the concern that the NSLRB will not be fully staffed and operational before the onset of bargaining disputes arising from implementation of subpart I. We agree with this concern and have modified the regulation to provide the Secretary with the authority to determine the effective date for the establishment of the NSLRB.

Commenters objected to the creation of the NSLRB, and recommended that the regulations preserve the authority of FLRA, FMCS, and FSIP. They remarked that these agencies, which are independent, impartial, and already funded, currently adjudicate the labor disputes that the proposed regulations authorize the NSLRB to resolve. In this regard, they challenged the independence and impartiality of any NSLRB member appointed by the Secretary. Therefore, they objected to any change to the status quo.

We disagree that the NSLRB will not be an independent and impartial third party. The proposed regulations provide that NSLRB members may only be removed by the Secretary for inefficiency, neglect of duty, or malfeasance in office. This is the same standard that currently applies to members of the FLRA. Since this standard and the establishment of the NSLRB itself are provided for in these enabling regulations, they are beyond the scope of the Secretary's authority to change unilaterally. In addition, these regulations authorize the NSLRB to issue its own rules and operational procedures. The concatenation of these provisions assures the NSLRB's independence. Moreover, while there will be costs associated with the establishment of the NSLRB, we believe these costs will be offset by the increased efficiency in the resolution of labor disputes.

Commenters recommended that the final regulations set strict tenure requirements and limit the tenure for NSLRB board members to one term, with no possibility for renewal or extension. We note that the proposed regulations set the term of NSLRB member appointments at 3 years, but we do not agree that there should be a prohibition on members serving an additional term. These individuals may be viewed as exemplary adjudicators not only to management, but also to the labor organizations. To unilaterally exclude members from serving additional terms would limit the applicant pool and possibly lead to extended vacancies. We therefore have not accepted the recommendation.

However, commenters, including labor organizations participating in the meet-and-confer process, recommended that we provide for more union involvement in the appointment of NSLRB members. We agree with these commenters and, thus, have modified the regulations to provide a process whereby employee representatives may submit a list of nominees for the Secretary's consideration for appointment of non-chair members of the NSLRB. We have also provided that the Secretary may consult with employee organizations to obtain additional information regarding any nominee submitted.

Other commenters approved of the proposal to establish the NSLRB, indicating that the NSLRB would afford the Department greater regularity and consistency in case processing than currently provided by FLRA. Labor organizations participating in the meet-and-confer process noted that the ''one-stop shop'' concept of the NSLRB was preferable to the division of prosecutorial, adjudicatory, and mediation responsibilities provided for in the current system. We agree.

Commenters suggested that we pursue a new statutory authority for direct judicial review of NSLRB decisions. While such a proposal is reasonable, enactment would be time consuming, uncertain, and subject to significant revision during the legislative process. Our proposed process as authorized by section 9902(m)(6) subjects certain final NSLRB decisions to FLRA review, which in turn would be subject to judicial review as it is under chapter 71. We believe this is a more expeditious and appropriate approach. This process affords the parties the opportunity to

obtain review of an NSLRB decision without the need for court proceedings and, in many cases, the FLRA review may be sufficient to resolve the dispute. Therefore, we have not adopted this suggestion.

However, comments related to judicial review revealed confusion regarding the process for judicial review, and we have, therefore, eliminated the reference to judicial review in § 9901.907. We have instead added a new paragraph (c) in § 9901.909 that describes the process for appellate review of NSLRB decisions. To be absolutely clear, § 9901.909 provides the mechanism for obtaining judicial review beginning with the appellate review of the FLRA. We have also modified paragraph (d) (paragraph (c) in the proposed regulation) of § 9901.909 by adding language reflecting our intent that judicial review of FLRA decisions is obtained pursuant to 5 U.S.C. 7123, which is modified only to conform relevant citations in chapter 71 to the corresponding provisions in subpart I.

Although many commenters, including labor organizations participating in the meet-and-confer process, did not support its establishment, we have decided to retain the NSLRB. As we indicated in the Preamble accompanying the proposed regulations, it ensures that those who adjudicate the most critical labor disputes in the Department do so quickly and with an understanding and appreciation of the unique challenges that the Department faces in carrying out its mission.

Section 9901.908—Powers and Duties of the Board and Section 9901.909—Powers and Duties of the Federal Labor Relations Authority

Commenters recommended that FLRA retain greater jurisdiction over the Department's labor disputes. Specifically, they expressed the view that not all labor relations disputes arising under NSPS will significantly impact the DoD's mission enough to warrant their removal from FLRA jurisdiction. We disagree. It is imperative that the NSLRB retain jurisdiction over matters that require efficient review and understanding of the Department's mission. This is consistent with the requirement in 5 U.S.C. 9902(m)(1) that the system OPM and DoD establish address the unique role that the Department's civilian workforce plays in support of the Department's national security mission. As a result, the final regulations give the NSLRB jurisdiction over disputes concerning the duty to bargain, the scope of bargaining, negotiation impasses, and related exceptions to arbitration awards. In addition, the final regulations clarify that the FLRA will review Board decisions on unfair labor practices (except when the Board declines to adjudicate the matter), arbitration awards under § 9901.908, and negotiability disputes.

Commenters further inquired about the NSLRB's authority to investigate unfair labor practices and other labor disputes. We agree that the NSLRB should have the authority to investigate and have modified the regulations to provide the NSLRB with authority to establish procedures for investigations in their regulations. In addition, we have clarified that the Board has the authority, similar to that exercised today by the FLRA General Counsel, to exercise unreviewable discretion to dismiss unfair labor practice allegations.

Commenters expressed concern that the Board would not be fully equipped to handle the extreme workload related to the implementation of the labor relations system at stand up. We agree. We have added a new § 9901.908(a), to reflect the change discussed under § 9901.907, National Security Labor Relations Board, which provides the Secretary with the authority to determine the date of establishment of the NSLRB. Pending establishment of the NSLRB, the regulations also provide the Secretary discretion, in consultation with the Director, to designate another third party to exercise the authority of the Board in the interim.

Commenters questioned why the proposed regulations authorized the NSLRB to issue, at the request of any party, binding opinions on matters within its jurisdiction that would be subject to FLRA and judicial review. They further questioned who would have standing to seek review, other than the initial requester, since there would be no specific labor dispute at issue, and recommended the deletion of this provision. In response to these concerns, we have revised the language to strike the phrase ''binding Department-wide opinions'' and replaced it with ''guidance,'' thus allowing the NSLRB to issue non-binding guidance. While we have struck the language that would have allowed FLRA and judicial review of this guidance, we anticipate that the guidance will be accorded deference by other third parties in the cases before them. We also received a comment suggesting that the procedures to request an opinion under this provision are confusing. We disagree and have made no changes to this process.

Commenters raised concerns about the NSLRB's authority under § 9901.908(a)(3) of the proposed regulations to resolve disputes concerning requests for information under § 9901.914(b)(5). Accordingly, we have deleted this provision. Disputes concerning denial of information requests are processed as unfair labor practices, which are included in § 9901.908(b)(1).

Commenters, including labor organizations participating in the meet-and-confer process, expressed concern with the NSLRB's authority to resolve national consultation disputes. We agree and have amended the regulations to retain FLRA jurisdiction over disputes regarding the granting of National Consultation Rights. Accordingly, we have deleted § 9901.908(a)(8) of the proposed regulations, which had reserved this authority to the NSLRB.

Some commenters expressed concern with the limitation on the Board's authority to issue *status quo ante* awards. These commenters argued that the authority to order *status quo ante* remedies to make aggrieved employees whole was essential for employees to perceive the NSLRB as legitimate. We disagree. We believe that the limitations on the award of *status quo ante* remedies appropriately recognize and correctly balance the Department's national security mission and the unique role that DoD civilian employees play in supporting that mission. We believe the limitations provided in the regulations are appropriate and have not accepted the recommendations.

A labor organization expressed concern that the Board's *de novo* review authority of an arbitrator's findings of fact made the proposed system illegitimate. We disagree. We believe it is necessary for the Board to review the underlying facts in any dispute to ensure that a correct determination has been rendered.

Commenters also recommended that we define the Board's remedial authorities. We do not believe that this is necessary, just as it was unnecessary to define the FLRA's remedial authorities under chapter 71.

Commenters also raised concerns regarding the Board's authority under § 9901.908(a)(1) and (a)(5) of the proposed regulations to decline jurisdiction over individual labor disputes. We share their concerns and have amended the proposed language to give the Board the added authority to reject unfair labor practices and negotiation impasses.

Section 9901.910—Management Rights

Commenters, including labor organizations participating in the meet-and-confer process, recommended that

we retain the current language in 5 U.S.C. chapter 71 with regard to management rights, arguing that the proposed regulations unduly limited the scope of bargaining. Specifically, commenters expressed concern that limiting collective bargaining over the assignment of equipment and shifts could compromise public safety. These commenters recommended that management retain the right to permissively bargain certain subjects when appropriate, rather than replacing the requirement to bargain with a requirement to consult with the labor organizations concurrent with taking action. Moreover, commenters suggested that labor organizations should be able to bargain appropriate arrangements prior to management taking an action that potentially could adversely affect bargaining unit employees rather than providing for post implementation bargaining. Commenters, most notably labor organizations, objected to the prohibition of bargaining procedures concerning management rights at § 9901.910(a)(1) and (2). Labor organizations also suggested that the right to negotiate procedures for management rights at § 9901.910(a)(3) is illusory. Labor organizations suggested that no justification has been provided to restrict bargaining over procedures and this restriction is contrary to law. Finally, commenters objected to the provision that allowed management to deviate from established procedures because they believe such an action is unreasonable.

Although these issues were discussed during the meet-and-confer process, the employee and management representatives were unable to fashion a recommendation to resolve these differences that would be acceptable to all parties. The labor organizations participating in the meet-and-confer process, while willing to discuss some modifications to the procedures in chapter 71, held fast to their position that the existing labor relations system only needed slight modifications to meet the Department's need for flexibility and agility to support its national security mission. We disagree with the labor organizations' suggestion that implementing issuances and issuances should be subject to an adaptation of the FLRA's compelling need standard, which requires a link between the policy to be implemented and national security, to override collective bargaining agreements. Furthermore, we believe that, even with modifications discussed with the labor organizations during the meet-and-confer process, to interpret the emergency provisions of chapter 71 more liberally and to allow post-implementation bargaining in certain limited situations, the current statute does not give the Department the flexibility necessary to carry out its vital national security mission. Today, the Department is increasingly faced with an enemy that can attack with little or no advance warning. The Department must be agile enough to respond to the emerging and rapidly evolving threats inherent in 21st century warfare.

Finally, we have modified the regulations to permit bargaining, in the sole, exclusive, unreviewable discretion of the Secretary, over the procedures that would be followed in exercising the expanded operational management rights. We have also modified the regulations to permit bargaining, at the election of the Secretary, over appropriate arrangements on the routine matters related to the expanded operational management rights. The Secretary may authorize such bargaining to advance the Department's mission accomplishment or promote organizational effectiveness. Mid-term agreements on appropriate arrangements and procedures for (a)(1) and (a)(2) management rights are not precedential or binding on subsequent acts, or retroactively applied, except at the Secretary's sole, exclusive, and unreviewable discretion. Procedures and appropriate arrangements in term agreements are binding, except that nothing will delay or prevent the Secretary from exercising his or her authority under subpart I. For example, the Secretary may authorize deviation from such agreements when it is necessary to carry out the Department's mission. This authority is comparable to what occurs today when an emergency exists.

We have also made some minor changes to the section to make technical corrections and to clarify intent. Specifically, in § 9901.910(e) we have corrected the citation from ''§ 9901.913'' to the correct citation of ''§ 9901.917.'' In response to another commenter, we have removed the ''foreseeable, substantial, and significant'' standard from § 9901.910(e)(2)(i) because it is unnecessary given the language in § 9901.917(d)(2). We have also added references to sections 9901.918 and 9901.919 to conform to the authorities in those sections for multi-unit bargaining and bargaining above the level of recognition, respectively.

Section 9901.911—Exclusive Recognition of Labor Organizations

Labor organizations recommended that we delete the section as it is duplicative of the introductory provisions in 5 U.S.C. 7111. We disagree. Although labor organization recognition remains unchanged from 5 U.S.C. chapter 71, we believe that it is important to affirmatively state in these regulations that labor organizations will be recognized under subpart I in the same manner as they are under chapter 71.

Section 9901.912—Determination of Appropriate Units for Labor Organization Representation

The proposed regulations under § 9901.912(b)(3) and (4) would exclude all employees engaged in personnel work and individuals employed in attorney positions. In response to comments received, particularly from labor organizations participating in the meet-and-confer process, which opposed these exclusions as unnecessary and overbroad, we have revised the language to reflect the current language in 5 U.S.C. chapter 71.

Although the proposed regulations did not explicitly provide special rules for bargaining unit inclusion or exclusion for employees holding security clearances, there were multiple comments on the subject. Commenters suggested that employees with security clearances should be excluded from bargaining units because of national security concerns. Labor organizations participating in the meet-and-confer process recommended an alternative approach that would require an employee with a security clearance to be excluded if that employee's duties required independent judgment in the formulation of national security policy. While we understand the complexity of the issue, we disagree with both recommendations because we believe the existing approach of case-by-case exclusion is appropriate. Given the sensitivity of the issue, we believe a universal approach to security clearance exclusion would be inflexible and ineffective.

Section 9901.913—National Consultation

Commenters, including labor organizations participating in the meet-and-confer process, recommended deleting these provisions because, in their view, they are unlawful deviations from chapter 71. We disagree for the reasons stated under *General Comments.* Commenters further recommended that the FLRA should retain jurisdiction over national consultation issues. We have adopted this recommendation and modified the language accordingly. We also received comments suggesting that the phrases

''substantial number of employees'' and ''reasonable time'' are vague. However, this is the exact language that appears in chapter 71 and the FLRA has a long history of interpreting this language. Therefore, we have retained the language.

Section 9901.914—Representation Rights and Duties

Commenters, including labor organizations participating in the meet-and-confer process, strongly objected to the elimination of the right of an employee to request representation when examined by representatives of the Office of the Inspector General and other independent Department and Component organizations whose mission includes criminal investigations. These commenters argued that such representation protects employees against abusive or illegal interview techniques and provides reassurance and guidance to employees. We agree, and have revised the regulations to eliminate these restrictions on representation.

We also received comments, including comments from labor organizations participating in the meet-and-confer process, that opposed the restrictions on the union's right to attend formal EEO proceedings. Alternatively, other commenters strongly supported this restriction. We have carefully considered the comments and have come to the conclusion that the often sensitive nature of discrimination complaints, coupled with the fact that the employee has exercised an option to not use the negotiated grievance procedure, supports this limitation on a labor organization's right to attend such discussions. We believe the procedures as described in the proposed regulations provide the best balance between the unions' institutional interest in the matter and the employee's right to privacy. Consistent with this determination, we have added clarifying language in § 9901.915(a)(2)(C).

Commenters, including labor organizations participating in the meet-and-confer process, expressed the view that there is no valid reason to restrict the union's right to attend formal discussions over operational matters. Some of these comments appear to confuse this right as it currently exists under chapter 71. Some commenters suggest that any formal meeting with employees requires an invitation for union attendance. This is clearly not the case today, and case law is clear that it must be a formal meeting where a change to existing conditions of employment is discussed. Many meetings where operational matters are discussed, such as the routine assignment of work, do not rise to the level of requiring union participation. Furthermore, we believe that allowing managers to respond to basic questions regarding conditions of employment, such as a routine question by a newer employee regarding how an overtime roster operates, should not require union participation as the manager is merely reiterating existing policy. Management and employees must be able to freely communicate on such routine matters if the Department is to operate efficiently. Furthermore, such a communication in no way diminishes the role of the union, and does not in any way authorize a manager to discuss changing these procedures without union participation. For the forgoing reasons, we have not accepted the recommendation and have retained the language as it appeared in the proposed regulation.

Labor organizations participating in the meet-and-confer process and other commenters also recommended that we retain the ''flagrant misconduct'' standard for employee conduct while serving as union officials. Commenters argued that union representatives are different than other employees because they have the right to speak, write, associate, and petition for the redress of wronged employees. However, all employees, regardless of whether they are union representatives, are expected to express their concerns in an appropriate manner, particularly in scenarios where there could be a safety or security violation. The intent is not to prevent honest and open discussion, but rather to ensure that such discussions are undertaken in a professional and courteous manner. Under the proposed standard, there is no requirement that a union representative not assert the union's position. The only conduct the revised standard is intended to stop is the rare, but utterly unacceptable use of vulgar or sexually explicit language, as well as physical intimidation by union officials. We believe the revised standard is appropriate, particularly in a military organization that has a longstanding tradition of professionalism and courtesy. We have therefore not accepted this recommendation.

Commenters, including labor organizations participating in the meet-and-confer process, objected to the limitations on management's obligation to provide information to a union under the proposed regulations. Generally these comments focused on the provisions allowing an authorized official to block the release of information if that official determines the release would compromise mission, security, or employee safety. These provisions generally codify current case law in which the right of the union to information is weighed against the rights of employees and management. This language simply clarifies the existing state of affairs. Thus, we have not adopted the recommendations to eliminate these provisions.

Several commenters also suggested that the 30-day period for agency head review was unreasonably short. The process of agency head review, including the 30-day limitation, as provided for in § 9901.914(d)(1)–(4) is based on, and adopts, the authority of heads of agencies that exists today under 5 U.S.C. 7114(c). This standard has been in effect for many years under 5 U.S.C. chapter 71 and has worked efficiently. Thus, we believe that this is sufficient time for agency head review to occur and we have retained the 30-day time frame. We have modified § 9901.914(d)(2) and (3) to conform the provisions to the revised definition of ''issuances'' that could serve as the basis for disapproval of conflicting provisions of collective bargaining agreements upon agency head approval. We have also adopted a comment to revise § 9901.914(d)(5) to clarify that agreements are unenforceable because they conflict with applicable law, rule or regulation, or issuance, rather than because an authorized agency official has made such a determination. We have added clarifying language to this paragraph in response to numerous comments regarding the impact of issuances on collective bargaining agreements. The revised language clarifies that collective bargaining agreement provisions that conflict with issuances remain in effect until expiration of the agreement at which time the agreement must be brought into conformance with the issuance.

Section 9901.916—Unfair Labor Practices

Commenters, including labor organizations participating in the meet-and-confer process, recommended that DoD should not be permitted to enforce a rule or regulation that is in conflict with a collective bargaining agreement if the agreement was in effect prior to the issuance of the rule or regulation. We agree with these recommendations to the extent that the rule or regulation is not implementing NSPS and have amended the regulations to reflect the current 5 U.S.C. 7116(a)(7) unfair labor practice with a modification to exclude implementing issuances, which under these regulations, will immediately

supersede conflicting provisions of collective bargaining agreements.

Commenters, including labor organizations participating in the meet-and-confer process, suggested that employees or employee representatives should have more than 90 days to file an unfair labor practice with the Board. We concur and have revised the regulation to provide six months, which is consistent with the current filing limits under chapter 71. Finally, to conform this section to the changes made to § 9901.908 and to clarify the Board's authority with respect to unreviewable discretion, we have eliminated reference to the term ''charge'' and inserted instead the generic term ''allegation.'' This also supports our goal for the Board to use a single, integrated, streamlined process for resolving labor relations disputes, including unfair labor practices.

Section 9901.917—Duty To Bargain and Consult

Commenters, including labor organizations participating in the meet-and-confer process, objected to the establishment of a 30-day time limit to complete mid-term bargaining, as proposed in § 9901.917(c). We have modified this section to allow the parties, by mutual consent, to continue mid-term negotiations beyond the proposed 30-day limitation. This change to § 9901.917(c) parallels identical language in § 9901.917(b).

Additionally, based on comments made during the meet-and-confer process that it was illogical to restrict the parties' ability to seek bargaining assistance early in the process, we changed the proposed language in § 9901.917(b) and (c) to allow either party, at any time prior to going to the Board, to refer matters at impasse to FMCS or, if mutually agreeable, to another third party.

We made technical changes to the language in § 9901.917(d)(1) to conform it to the revised definitions of ''implementing issuance'' and ''issuance.'' Commenters found the § 9901.917(d)(2) limitation on bargaining to be unnecessary and unclear. First, commenters suggested that the lead phrase, ''except as otherwise provided in 910(c),'' was unnecessary. We disagree. The phrase is intended to convey that labor organizations will have a right to consult on procedures in exercising management rights at § 9901.910(a)(1) and (2) even though § 9901.917(d)(2) limits consultation to otherwise negotiable changes in conditions of employment subject to the foreseeable, substantial and significant standard. In other words, this requires consultation on procedures for these particular management rights although ''bargaining'' on procedures is prohibited at § 9901.910(b). Commenters also raised concerns about the application of the § 9901.917(d)(2) standard, given that it contains a number of undefined words and phrases, *e.g.,* ''foreseeable, substantial, and significant in terms of both impact and duration on the bargaining unit, or on those employees in that part of the bargaining unit affected by the change.'' Commenters fear that, absent a definition of these terms and phrases, DoD management could interpret them in a way that would render employee and union rights meaningless. Commenters recommended that we delete the provision altogether and rely on the FLRA's existing *de minimis* standard. We have not adopted these suggestions. While we agree that the standard is subject to interpretation, we anticipate that a body of case law will develop to guide the parties in applying this standard, just as there is a body of case law regarding the FLRA's *de minimis* standard.

Section 9901.918—Multi-unit Bargaining

Commenters expressed concern that while unions could request multi-unit bargaining, the Secretary has sole and exclusive authority to grant such request. While we recognize this concern, we believe that the Secretary is in a unique position to determine when an issue is appropriate for multi-unit bargaining given variations in mission and organization across the Department. We are also unclear as to how one union could require another union to participate in multi-unit bargaining. We have therefore rejected recommendations to allow unions to require multi-unit bargaining. However, we have modified the language to clarify the Secretary's authority to require multi-unit bargaining.

Commenters, including labor organizations participating in the meet-and-confer process, expressed strong opinions regarding the prohibition on ratification of contracts. While we understand that ratification is an internal union process, we believe it would be untenable to give each individual bargaining unit veto power over a multi-unit agreement after the parties have reached agreement. Thus, we have adopted the recommendation to eliminate the prohibition on ratification, but added a provision that when an agreement is reached under this section, individual bargaining units may not opt out of or veto that agreement.

Section 9901.919—Collective Bargaining Above the Level of Recognition

Several comments questioned the procedures that will be used for bargaining above the level of recognition, such as the approval process for official time requested by union officials who may be under different Military Departments. In response, we have added a provision that the Department will prescribe implementing issuances on the procedures associated with collective bargaining above the level of recognition.

Commenters, including labor organizations participating in the meet-and-confer process, acknowledged that bargaining at the national level could be appropriate, under certain circumstances. They objected, however, to giving the Secretary the sole and exclusive discretion over the use of this special bargaining authority as well as the provisions requiring these negotiations to supersede all conflicting provisions of existing collective bargaining agreements. We disagree. These provisions are required by 5 U.S.C. 9902(g)(2). In addition, we believe they are necessary for effective national level bargaining.

Commenters also objected to the prohibition on ratification in § 9901.919(b)(5). Based on the same rationale relating to this issue with regard to multi-unit bargaining, we have adopted the recommendation to delete the proposed ratification language. In its place, § 9901.919(b)(5) now provides that individual labor organizations cannot opt out of, or veto, a final national level bargaining agreement.

Section 9901.920—Negotiation Impasses

Labor organizations objected to the NSLRB adjudicating negotiation impasses because they assert that the NSLRB is not an independent third party. We disagree with this assertion for the reasons discussed in the *Major Issues* section. During the meet-and-confer process, the participating labor organizations recommended using arbitrators to resolve negotiation impasses. We disagree because such a system would lead to inconsistent and inefficient results. Use of the NSLRB will, over time, result in an established body of precedent upon which both management and unions may rely.

We have made a conforming change by adding § 9901.905 to the list of sections for which the parties may submit disputed issues to the Board. We

also made a technical correction deleting a reference to judicial review for unfair labor practices involving negotiation impasses since this is already provided for in § 9901.909.

Section 9901.921—Standards of Conduct for Labor Organizations

Labor organizations objected to this section as duplicative of 5 U.S.C. chapter 71. However, we have decided to retain it to ensure that labor organizations are cognizant of applicable standards of conduct.

Section 9901.922—Grievance Procedure

Commenters recommended that the term ''administrative'' be reinserted into the description of the negotiated grievance procedure in order to retain access to judicial review. As the Government's brief in the pending case *Whitman* v. *DOT* (S. Ct. No. 04–1131) demonstrates, we do not believe the inclusion of the word ''administrative'' in chapter 71 was intended to authorize judicial review of grievances. Nonetheless, since some courts and parties have taken the position that the addition of the word ''administrative'' authorized judicial review, we have removed that term from the regulation to avoid any suggestion that this regulation would authorize judicial review. Because this change clarifies that judicial review over many issues is not available, it does not restrict an employee's right to obtain MSPB or EEOC review of adverse actions and subsequent judicial review of those decisions. Therefore, we have rejected the recommendation and retained that language as proposed.

Commenters, including the labor organizations participating in the meet-and-confer process, recommended that classification issues should be subject to the grievance procedure. However, the classification of positions generally has been excluded from the grievance procedure. We believe that consistency of classification, while always important, becomes critical as we move into a pay-for-performance environment. Subjecting classification decisions to inconsistent interpretations by arbitrators would undermine the system. This would result in a fragmented classification system throughout the Department with similarly situated employees being treated differently. Such a result would be inconsistent with the NSPS Guiding Principles and KPPs, which require that the system be credible and trusted. Therefore, we have not adopted this recommended change.

Commenters, including labor organizations participating in the meet-and-confer process recommended that pay be subject to the grievance procedure. We note that pay has almost exclusively been excluded from the grievance procedure as it has historically been covered by Governmentwide regulation or law. The exclusion of pay from the grievance procedure is in keeping with this longstanding practice as we move into a pay for performance system. As with classification, subjecting pay determinations to inconsistent arbitrator interpretations would undermine the pay system and be inconsistent with statutory requirements that the pay system be fair, credible, and transparent. Thus, we have retained the language as proposed.

Many commenters, including labor organizations participating in the meet-and-confer process, presented strong arguments that employee ratings of record should continue to be subject to the grievance procedure and binding arbitration. Most commenters expressed concern that receiving an accurate performance rating was crucial to employees because that rating will be used in determining an employee's pay. Thus, employees need a credible system to challenge ratings of record that they believe are inaccurate. We agree and have provided employees the right to grieve their performance ratings of record through the negotiated grievance procedure. Moreover, during the meet-and-confer process, the unions agreed that the use of panels, consisting of an arbitrator, a management official and a union official, to decide grievances regarding ratings of record should be an option for employees. Thus, we have modified the regulations to provide that an employee may challenge a rating of record either through the negotiated grievance procedure using either a panel or traditional arbitration. Employees also have the option of using the administrative reconsideration process as set out in § 9901.409(g).

We have also added language to reflect case law which prevents an arbitrator, or a panel, from conducting an independent evaluation of performance or otherwise substituting his or her judgment for that of a manager. We have made clear that the arbitrator or panel has no authority to determine appropriate share payouts under the pay-for-performance system, as such determinations are made by management based on the rating of record. We believe that these changes address the concerns of commenters and will serve to instill confidence in the performance rating process.

Finally, a commenter recommended that appealable adverse actions be removed from the scope of the negotiated grievance procedure because of other available forums for redress. We agree that there is a statutory right to file an appeal with the Merit Systems Protection Board (MSPB), but the option to grieve these adverse actions as an alternative to the MSPB is a well established employee right. To address the requirement that the appeals process be fair and to ensure that the Department's national security mission is considered, we have retained regulatory language ensuring uniform review and interpretation of arbitral awards and AJ decisions. Thus, we have rejected this comment.

We also made a technical change to § 9901.922(e) to assure that mixed cases processed through a negotiated grievance procedure can properly be reviewed by the Equal Employment Opportunity Commission.

Section 9901.923—Exceptions to Arbitration Awards

Labor organizations participating in the meet-and-confer process suggested that we reconsider subjecting exceptions from arbitration decisions on appealable adverse actions to the Merit Systems Protection Board for appellate review. We disagree. The Secretary must retain full authority to review an arbitrator's decision on an appealable adverse action, similar to the need to review decisions of MSPB Administrative Judges, to ensure that the arbitrator interprets NSPS and these regulations in a way that recognizes the critical mission of the Department and to ensure that deference is provided to the Department's interpretation of these regulations. This provision is designed to ensure uniformity of interpretation and application of NSPS and these regulations. Allowing direct judicial review of arbitration decisions would create an inconsistent approach in how MSPB Administrative Judges and arbitrator decisions are treated on identical matters.

Section 9901.924—Official Time

Commenters found the proposed regulations to be unclear as to how official time would be allocated among union officials from different locals when they are engaged in multi-unit and/or national level bargaining. We note that the proposed regulations provide that the Secretary will prescribe implementing issuances on the procedures and constraints associated with multi-unit bargaining. These issuances will address a variety of issues including the granting of official time. However, the comment revealed that a parallel provision for collective

bargaining above the level of recognition has been inadvertently omitted for § 9901.919. Although multi-unit bargaining may also be at the level of recognition, there are situations where it could occur above the level of recognition. Therefore, to ensure clarity, we have amended this section to provide that the Secretary will prescribe implementing issuances on the procedures and constraints associated with bargaining above the level of recognition.

Section 9901.925—Compilation and Publication of Data

Commenters recommended that this section be deleted as its sole use and purpose, in their view, is to facilitate the Board's unlawful functioning. We disagree for the reasons explained under *General Comments,* and have retained this section.

Section 9901.926—Regulations of the Board

Commenters recommended that this section be deleted as its sole purpose, in their view, is to facilitate the Board's unlawful functioning. Commenters asserted that the Board must develop its own regulations and that the Department does not have the authority to issue interim regulations for an independent Board's operation. We agree that the Board should issue its own regulations and have provided the Board with that authority. However, we believe that it would be impractical for the Board to operate without interim rules until such time as the Board issues its own regulations. Thus, we have retained the Secretary's authority to develop interim NSLRB regulations.

Section 9901.927—Continuation of Existing Laws, Recognitions, and Procedures

Commenters recommended deletion of this section on the basis that invalidation of collective bargaining agreements provisions before the expiration of their term is, in their view, unlawful. Again, we disagree for the reasons explained under *General Comments.*

Commenters also suggested that the statements concerning the continuation of existing collective bargaining agreements and labor organization recognitions are unnecessary. We disagree because we want to ensure that there is no misunderstanding that these regulations will not dissolve established bargaining units within the Department nor cancel entire collective bargaining agreements.

Section 9901.928—Savings Provisions

We received comments recommending deletion of this section because the commenters believe that excluding administrative remedies for pending grievances is contrary to law. We disagree. To the extent that an award is prospective in nature, it must comply with the applicable procedures, whether established through law, rule, regulation or collective bargaining agreement.

Next Steps

A. NSPS Implementation

1. Employee Transition Plan (Spiral Strategy)

The Secretary adopted an ''acquisition model'' to design and implement NSPS. Eligible employees will transition to NSPS in phases or ''spirals.'' The spiral concept allows the Department to introduce NSPS in successive waves—to initially deploy the new personnel system to a number of organizations so that we can manage implementation and troubleshoot, evaluate, and report on the results in a timely manner. As with any new system, especially one with the size and complexity of NSPS, we may need to make refinements as we roll it out to the rest of the workforce. The first spiral, spiral one, is limited to General Schedule (GS and GM), Acquisition Demonstration Project, and certain alternative personnel system employees. As required by 5 U.S.C. 9902(l), the NSPS HR system under 5 U.S.C. 9902(a) may be implemented to a maximum of 300,000 employees without having to make a determination that the Department has in place a performance management system that meets the criteria in 5 U.S.C. 9902(b). Spiral one will cover up to the statutory limit of 300,000 employees.

After the assessment cycle and certification of the performance management system are completed, the second spiral will deploy. Spiral two includes Federal Wage System employees, overseas employees, and other eligible employees. Spiral three will comprise the DoD labs, currently excluded by 5 U.S.C. 9902(c), should the Secretary make the determination required by that section.

2. HR and Labor Relations Transition

Transition to the HR system occurs when employees convert or spiral into NSPS. Employees covered by the HR system are under the appeals process. Upon conversion, employees will be covered by the NSPS performance management, classification, pay, reduction in force, adverse action, and appeals regulations.

The labor relations provisions will be implemented DoD-wide for all eligible DoD employees at the same time. The labor relations provisions apply to all eligible employees even if the HR system does not cover them.

B. Development of Implementing Issuances and Continuing Collaboration

The Secretary will engage in continuing collaboration with employee representatives in developing implementing issuances. This will provide employee representatives an opportunity to submit written comments and discuss their views on human resources management issues. In some areas, such as classification and pay matters, law or other agency rules have governed decisions with no avenue for labor organizations to provide input to DoD. Continuing collaboration provides an historic opportunity for employee representatives to have input into the development of the Department's human resources management system, as well as certain aspects of the adverse actions, appeals, and labor relations programs not specifically covered by these regulations. It is an opportunity for their views and interests to be heard and considered in the development process and gives the Secretary the benefit of their insight. We encourage employee representatives to take advantage of this process and the benefits it offers.

The Secretary will provide the employee representatives draft copies of implementing issuances for review and comment. If necessary and appropriate, continuing collaboration could include face-to-face meetings or any other means to exchange information and ideas. We expect continuing collaboration to begin shortly after these final regulations become effective.

C. Training

The NSPS training plan presents a comprehensive, well-planned learning strategy to prepare the DoD workforce for the transition to NSPS. The plan is grounded in the belief that participants need to be informed and educated about NSPS and trust and value it as a system that fosters accountability, respects the individual, and protects his and her rights under the law. In building the plan, the Department seeks to educate employees about NSPS, teach the skills and behaviors necessary to implement and sustain NSPS, foster support and confidence in NSPS, and facilitate the transition to a performance-based, results-oriented culture.

The plan adopts a two-fold strategy centered around two interrelated training domains: The NSPS functional domain covering the NSPS system elements contained within the human resources, labor relations, and appeals sections of the regulations; and the change management domain, which focuses on the skills, attitudes, and behaviors necessary for success under NSPS. The plan incorporates a blended learning approach featuring Web-based and classroom instruction supplemented by a variety of learning products, informational materials, and workshops to effectively reach intended audiences with engaging, accurate, and timely content.

Within the functional domain, the Department will offer specialized courses for all of the functional areas covered by the NSPS regulations, tailored for specialized audiences (*e.g.,* supervisors/managers, human resources practitioners, attorneys, and non-supervisory employees). These courses will cover pay banding, staffing flexibilities, performance management, labor relations, the appeals process, and other matters. The Department has a robust training infrastructure already in place to train and educate its personnel and will leverage that infrastructure as we implement NSPS-specific training.

Managers and supervisors, including military managers and supervisors, are key to the success of NSPS and extensive training will be given to ensure their understanding of the system and the key role they play. Courses aimed at managers and supervisors will focus heavily on the performance management aspect of NSPS. DoD's Program Executive Office is developing these courses now and will make them available to components in time to train employees in advance of NSPS implementation. Training will focus on improving skills needed for effective performance management, such as setting clear goals and expectations, communicating with employees, and linking individual expectations to the goals and objectives of the organization.

The Department is also focusing attention on change management training to address the behavioral aspects of moving to NSPS and to better prepare the workforce for the changes NSPS will bring. The behavior-based training provides the foundation for future NSPS learning activities and facilitates increased communication between supervisors and employees as they discuss and jointly develop performance objectives tied to the overall organization's mission. This is essential if this new system is to be successful. Some of the component behavior-based training has already begun, and other courses are in development and will be available to train all affected employees in advance of NSPS implementation. Course offerings include interpersonal communication, team building, and conflict management to help facilitate interaction between employees and supervisors. In addition, components continue to offer a variety of informational forums and learning activities with sponsorship and active continuing involvement by DoD's senior leadership.

The design of the pay-for-performance system includes the use of pay pools, and we will also provide training for pay pool managers covering the pay pool process, goals and objectives, authorities, funding considerations, documentation, effective panel characteristics, etc. Roles and responsibilities of the pay pool manager and participating supervisors will also be covered extensively. The training will also feature a mock pay pool panel process that takes pay pool panel members through the full assessment process to include mock payout and employee feedback. This training builds in accountability and supports the needs of both employees and managers by providing an opportunity to experience the process and identify and correct procedures prior to undergoing the actual pay pool experience.

The PEO training plan was based on our extensive experience with previous demonstration projects. Training needs will vary by individual and organization depending on their familiarity with the fundamentals of a performance-oriented work environment. The core functional training courses available will include—

- 18 hours for managers and supervisors;
- 13 hours for employees; and
- 25 to 40 hours for HR practitioners (depending on the functional area of expertise; includes training on labor relations and appeals).

Although the time spent in training represents the Secretary's commitment to preparing the workforce, it is focusing on the results and outcomes of that training, as opposed to a prescriptive ''one size fits all'' strategy.

Employees will receive functional training through three primary vehicles:

Print Materials —directed to various targeted audiences to raise awareness and educate them on key NSPS elements and performance management concepts.

Web-based Training—two hour-long courses, ''Fundamentals of NSPS'' and ''NSPS 101,'' providing introductory, on-line training delivered in a consistent manner in a self-paced, on-demand format. The ''NSPS 101'' course serves as a prerequisite for the classroom sessions.

Classroom Sessions—the primary vehicle to communicate critical information, classroom sessions are under development for employees, managers and supervisors, human resources practitioners, and labor relations practitioners. The sessions will provide key operational information on all NSPS systems elements, with particular emphasis on performance management. Topics will include the performance management cycle, developing performance objectives, performance evaluation and assessment, performance coaching, and performance-based communication. Classroom training will be conducted using a train-the-trainer strategy, with trainers who participate in a train-the-trainer program leading all classroom training.

Trainers will be provided with instructor guides and will include basic instructional content supplemented by video vignettes and interactive exercises. Classroom training is scheduled to occur on a ''just-in-time'' basis, approximately 4 to 6 weeks prior to NSPS implementation.

The Department's leadership recognizes and is committed to providing the necessary training. Secretary England, during testimony to the Senate Armed Services Committee, stated that ''[t]raining is one of the most critical elements for a smooth and successful transition to NSPS. The Department is fully committed to a comprehensive training program for our managers, supervisors and employees. All employees will be trained to understand the system, how it works, and how it will affect them.''

The necessary resources are available to provide the training. To address these requirements, the PEO allocated $2 million in FY05 and anticipates allocating another $3 million in FY06 to fund development and delivery of core NSPS training courses and delivery of the ''train-the-trainer'' sessions.

Regulatory Requirements

E.O. 12866, Regulatory Review

DoD and OPM have determined that the National Security Personnel System (NSPS) is a significant regulatory action as enacted by Section 1101 of the National Defense Authorization Act for Fiscal Year 2004 (Pub. L. 108–136, November 24, 2003) because there is a significant public interest in revisions of the DoD civilian employment system.

DoD and OPM have analyzed the expected costs and benefits of NSPS to be implemented by DoD and that analysis is presented here.

Integral to the administration of the new performance-based personnel system is a commitment to the DoD workforce to the maximum extent practicable, for fiscal years 2004 through 2008, that the aggregate amount allocated for compensation of DoD employees under NSPS will not be less than if they had not been converted to NSPS. This takes into account potential step increases and rates of promotion had employees remained in their previous pay schedule. In addition, NSPS implementing issuances will provide a formula for calculating the aggregate compensation amount for fiscal years after fiscal year 2008. The formula will ensure that, to maximum extent practicable, in the aggregate, employees are not disadvantaged in the overall amount of pay available as a result of conversion to the NSPS, while providing flexibility to accommodate changes in the function of the organization, changes in the mix of employees performing those functions and other changed circumstances that might impact pay levels.

Accordingly, the NSPS performance-based pay system carries with it potential implications relative to the base pay of individual employees, depending upon local labor market conditions and individual, team, and organizational performance. However, actual payroll costs under this system will be constrained by the amount budgeted for overall DoD payroll expenditures, as is the case with the present GS pay system. DoD anticipates that accessions, separations, and promotions will net out and, as with the present system, not add to the overall cost of administering the system.

The creation of the performance-based NSPS will result in some initial implementation costs, which can be expressed in two basic categories: (1) Program implementation costs and (2) NSLRB start-up costs. The program category refers to the costs associated with designing and implementing the system. This includes the start-up and operation of the Program Executive Office, executing the system design process, developing and delivering new training specifically for NSPS, conducting outreach for employees and other parties, engaging in collaboration activities with employee representatives, and modifying human resources information systems, including personnel and payroll transaction processing systems. In the areas of training and HR automated systems, the costs associated with implementing NSPS will not be extensive, since DoD has significant training and information technology infrastructures in place for current operations. DoD will not have to build new systems or delivery mechanisms, but rather will modify existing systems and approaches to accommodate changes brought about by NSPS.

The other cost category refers to the cost to establish the National Security Labor Relations Board (NSLRB). This includes typical organizational stand-up costs, as well as staffing the NSLRB with members and a professional staff. It is expected that the NSLRB will develop streamlined processes and procedures and leverage existing infrastructures and technology to minimize start-up and sustainment cost.

As has been the practice with implementing other alternative personnel systems, DoD expects to incur an initial payroll cost related to the conversion of employees to the pay banding system. This is often referred to as a within-grade-increase (WGI) ''buyout'' in which an employee's basic pay, upon conversion, is adjusted by the amount of the WGI earned to date. While this increase is paid earlier than scheduled, it represents a cost that would have been incurred under the current system at some point. However, under the NSPS final regulations, WGIs no longer exist; once under NSPS, such pay increases will be based on performance. Accordingly, the total cost of the accelerated WGI ''buyout'' should not be treated as a ''new'' cost attributed to implementation of NSPS, since it is a cost that DoD would bear under the current HR system in the absence of the enabling legislation and corresponding regulations. The portion of the buyout cost attributable to NSPS implementation is the marginal difference between paying out the earned portion of a WGI upon conversion and the cost of paying the same WGI according to the current schedule. In the absence of NSPS, WGIs would be spread out over time instead of being paid ''up front.'' The marginal cost of the accelerated payment of earned WGIs is difficult to estimate, but is not a significant factor in the cost benefit analysis for regulatory review purposes.

In addition, DoD will incur costs relating to such matters as training development, support, and execution; reprogramming automated payroll and human resources information systems; developing guiding issuances, implementation planning, scheduling, and monitoring; design, production, and distribution of communication materials; conducting employee education and communication activities; developing and conducting pay surveys to determine future pay adjustments in relation to the labor market; conducting surveys and data analysis to ensure key performance parameters are met; the establishment of the National Security Labor Relations Board (NSLRB); and the overall operation of the NSPS Program Executive Office. The extent of these costs will be directly related to the level of comprehensiveness desired by DoD.

DoD estimates the overall costs associated with implementing the new DoD HR system—including the development and implementation of a new human resources system and the creation of the NSLRB—will be approximately $158 million through 2008. Less than $100 million will be spent in any given 12-month period.

The primary benefit to the public of this new system resides in the flexibilities that will enable DoD to build a high-performance organization focused on mission accomplishment. The new job evaluation, performance-based pay and management system provides DoD with an increased ability to attract and retain a more qualified and proficient workforce. The new and improved processes in labor management relations, adverse actions, and appeals will afford DoD greater flexibility to manage its workforce in the face of constantly changing threats to the United States and to successfully support its primary mission of Defense and the Global War on Terrorism. Taken as a whole, the changes included in these final regulations will result in a contemporary, merit-based HR system that focuses on performance, generates respect and trust, and supports the primary mission of DoD.

Regulatory Flexibility Act

DoD and OPM have determined that these regulations will not have a significant economic impact on a substantial number of small entities because they will apply only to Federal agencies and employees.

E.O. 12988, Civil Justice Reform

This regulation is consistent with the requirements of E.O. 12988. The regulation clearly specifies the effects on existing Federal law or regulation; provides clear legal standards; has no retroactive effects; specifies procedures for administrative and court actions; defines key terms; and is drafted clearly.

E.O. 13132, Federalism

DoD and OPM have determined that these regulations will not have

federalism implications because they will apply only to Federal agencies and employees. The regulations will not have financial or other effects on States, the relationship between the Federal Government and the States, or the distribution of power and responsibilities among the various levels of government.

Paperwork Reduction Act of 1995 (44 U.S.C. Chapter 35)

This final regulatory action will not impose any additional reporting or recordkeeping requirements under the Paperwork Reduction Act.

Unfunded Mandates

These regulations will not result in the expenditure by State, local, or tribal governments of more than $100 million annually. Thus, no written assessment of unfunded mandates is required.

List of Subjects in 5 CFR Part 9901

Administrative practice and procedure, Government employees, Labor management relations, Labor unions, Reporting and recordkeeping requirements, Wages.

Linda M. Springer,

Director, Office of Personnel Management.

Donald Rumsfeld,

Secretary, Department of Defense.

■ Accordingly, under the authority of section 9902 of title 5, United States Code, the Department of Defense and the Office of Personnel Management amend title 5, Code of Federal Regulations, by establishing chapter XCIX consisting of part 9901 as follows:

CHAPTER XCIX—DEPARTMENT OF DEFENSE HUMAN RESOURCES MANAGEMENT AND LABOR RELATIONS SYSTEMS (DEPARTMENT OF DEFENSE—OFFICE OF PERSONNEL MANAGEMENT)

PART 9901—DEPARTMENT OF DEFENSE HUMAN RESOURCES MANAGEMENT AND LABOR RELATIONS SYSTEMS

Subpart A—General Provisions

Sec.

9901.101 Purpose.
9901.102 Eligibility and coverage.
9901.103 Definitions.
9901.104 Scope of authority.
9901.105 Coordination with OPM.
9901.106 Continuing collaboration.
9901.107 Relationship to other provisions.
9901.108 Program evaluation.

Subpart B—Classification

General

9901.201 Purpose.
9901.202 Coverage.
9901.203 Waivers.
9901.204 Definitions.
9901.205 Bar on collective bargaining.

Classification Structure

9901.211 Career groups.
9901.212 Pay schedules and pay bands.

Classification Process

9901.221 Classification requirements.
9901.222 Reconsideration of classification decisions.

Transitional Provisions

9901.231 Conversion of positions and employees to the NSPS classification system.

Subpart C—Pay and Pay Administration

General

9901.301 Purpose.
9901.302 Coverage.
9901.303 Waivers.
9901.304 Definitions.
9901.305 Bar on collective bargaining.

Overview of Pay System

9901.311 Major features.
9901.312 Maximum rates.
9901.313 National security compensation comparability.

Setting and Adjusting Rate Ranges

9901.321 Structure.
9901.322 Setting and adjusting rate ranges.
9901.323 Eligibility for pay increase associated with a rate range adjustment.

Local Market Supplements

9901.331 General.
9901.332 Local market supplements.
9901.333 Setting and adjusting local market supplements.
9901.334 Eligibility for pay increase associated with a supplement adjustment.

Performance-Based Pay

9901.341 General.
9901.342 Performance payouts.
9901.343 Pay reduction based on unacceptable performance and/or conduct.
9901.344 Other performance payments.
9901.345 Treatment of developmental positions.

Pay Administration

9901.351 Setting an employee's starting pay.
9901.352 Setting pay upon reassignment.
9901.353 Setting pay upon promotion.
9901.354 Setting pay upon reduction in band.
9901.355 Pay retention.
9901.356 Miscellaneous.

Premium Pay

9901.361 General.

Conversion Provisions

9901.371 General.
9901.372 Creating initial pay ranges.
9901.373 Conversion of employees to the NSPS pay system.

Subpart D—Performance Management

9901.401 Purpose.
9901.402 Coverage.
9901.403 Waivers.
9901.404 Definitions.
9901.405 Performance management system requirements.
9901.406 Setting and communicating performance expectations.
9901.407 Monitoring performance and providing feedback.
9901.408 Developing performance and addressing poor performance.
9901.409 Rating and rewarding performance.

Subpart E—Staffing and Employment

General

9901.501 Purpose.
9901.502 Scope of authority.
9901.503 Coverage.
9901.504 Definitions.

External Recruitment and Internal Placement

9901.511 Appointing authorities.
9901.512 Probationary periods.
9901.513 Qualification standards.
9901.514 Non-citizen hiring.
9901.515 Competitive examining procedures.
9901.516 Internal placement.

Subpart F—Workforce Shaping

9901.601 Purpose and applicability.
9901.602 Scope of authority.
9901.603 Definitions.
9901.604 Coverage.
9901.605 Competitive area.
9901.606 Competitive group.
9901.607 Retention standing.
9901.608 Displacement, release, and position offers.
9901.609 Reduction in force notices.
9901.610 Voluntary separation.
9901.611 Reduction in force appeals.

Subpart G—Adverse Actions

General

9901.701 Purpose.
9901.702 Waivers.
9901.703 Definitions.
9901.704 Coverage.

Requirements for Removal, Suspension, Furlough of 30 Days or Less, Reduction in Pay, or Reduction in Band (or Comparable Reduction)

9901.711 Standard for action.
9901.712 Mandatory removal offenses.
9901.713 Procedures.
9901.714 Proposal notice.
9901.715 Opportunity to reply.
9901.716 Decision notice.
9901.717 Departmental record.

Savings Provision

9901.721 Savings provision.

Subpart H—Appeals

9901.801 Purpose.
9901.802 Applicable legal standards and precedents.
9901.803 Waivers.
9901.804 Definitions.
9901.805 Coverage.
9901.806 Alternative dispute resolution.
9901.807 Appellate procedures.
9901.808 Appeals of mandatory removal actions.
9901.809 Actions involving discrimination.
9901.810 Savings provision.

Subpart I—Labor-Management Relations

9901.901 Purpose.
9901.902 Scope of authority.
9901.903 Definitions.
9901.904 Coverage.
9901.905 Impact on existing agreements.
9901.906 Employee rights.
9901.907 National Security Labor Relations Board.
9901.908 Powers and duties of the Board.
9901.909 Powers and duties of the Federal Labor Relations Authority.
9901.910 Management rights.
9901.911 Exclusive recognition of labor organizations.
9901.912 Determination of appropriate units for labor organization representation.
9901.913 National consultation.
9901.914 Representation rights and duties.
9901.915 Allotments to representatives.
9901.916 Unfair labor practices.
9901.917 Duty to bargain and consult.
9901.918 Multi-unit bargaining.
9901.919 Collective bargaining above the level of recognition.
9901.920 Negotiation impasses.
9901.921 Standards of conduct for labor organizations.
9901.922 Grievance procedures.
9901.923 Exceptions to arbitration awards.
9901.924 Official time.
9901.925 Compilation and publication of data.
9901.926 Regulations of the Board.
9901.927 Continuation of existing laws, recognitions, agreements, and procedures.
9901.928 Savings provisions.

Authority: 5 U.S.C. 9902

Subpart A—General Provisions

§ 9901.101 Purpose.

(a) This part contains regulations governing the establishment of a new human resources management system and a new labor relations system within the Department of Defense (DoD), as authorized by 5 U.S.C. 9902. Consistent with 5 U.S.C. 9902, these regulations waive or modify various statutory provisions that would otherwise be applicable to affected DoD employees. These regulations are prescribed jointly by the Secretary of Defense and the Director of the Office of Personnel Management (OPM).

(b)(1) This part is designed to meet a number of essential requirements for the implementation of a new human resources management system and a new labor relations system for DoD. The guiding principles for establishing these requirements are to put mission first; respect the individual; protect rights guaranteed by law, including the statutory merit system principles in 5 U.S.C. 2301; value talent, performance, leadership, and commitment to public service; be flexible, understandable, credible, responsive, and executable; ensure accountability at all levels; balance human resources system interoperability with unique mission requirements; and be competitive and cost effective.

(2) The key operational characteristics and requirements of NSPS and the labor relations system, which these regulations are designed to facilitate, are as follows: *High Performing Workforce and Management*—employees and supervisors are compensated and retained based on their performance and contribution to mission; *Agile and Responsive Workforce and Management*—workforce can be easily sized, shaped, and deployed to meet changing mission requirements; *Credible and Trusted*—system assures openness, clarity, accountability, and adherence to the public employment principles of merit and fitness; *Fiscally Sound*—aggregate increases in civilian payroll, at the appropriations level, will conform to OMB fiscal guidance; *Supporting Infrastructure*—information technology support, and training and change management plans are available and funded; and *Schedule*—NSPS and the labor relations system will be operational and demonstrate success prior to November 2009.

§ 9901.102 Eligibility and coverage.

(a) Pursuant to the provisions of 5 U.S.C. 9902, all civilian employees of DoD are eligible for coverage under one or more of subparts B through I of this part, except to the extent specifically prohibited by law.

(b) At his or her sole and exclusive discretion, the Secretary may, subject to § 9901.105(b)—

(1) Establish or change the effective date for applying subpart I of this part to all eligible employees in accordance with 5 U.S.C. 9902(m); and

(2) With respect to subparts B through H of this part, apply these subparts to a specific category or categories of eligible civilian employees in organizations and functional units of the Department at any time in accordance with the provisions of 5 U.S.C. 9902. However, no category of employees may be covered by subparts B, C, E, F, G, or H of this part unless that category is also covered by subpart D of this part.

(c) Until the Secretary makes a determination under paragraph (b) of this section to apply the provisions of one or more subparts of this part to a particular category or categories of eligible employees in organizations and functional units, those employees, will continue to be covered by the applicable Federal laws and regulations that would apply to them in the absence of this part. All personnel actions affecting DoD employees will be based on the Federal laws and regulations applicable to them on the effective date of the action.

(d) Any new NSPS classification, pay, or performance management system covering Senior Executive Service (SES) members will be consistent with the policies and procedures established by the Governmentwide SES pay-for-performance framework authorized by 5 U.S.C. chapter 53, subchapter VIII, and applicable OPM regulations. If the Secretary determines that SES members employed by DoD should be covered by classification, pay, or performance management provisions that differ substantially from the Governmentwide SES pay-for-performance framework, the Secretary and the Director will issue joint regulations consistent with all of the requirements of 5 U.S.C. 9902.

(e) At his or her sole and exclusive discretion, the Secretary may rescind the application under paragraph (b) of this section of one or more subparts of this part to a particular category of employees and prescribe implementing issuances for converting that category of employees to coverage under applicable title 5 or other applicable provisions. The Secretary will notify affected employees and labor organizations in advance of a decision to rescind the application of one or more subparts of this part to them.

(f)(1) Notwithstanding any other provision of this part, but subject to the following conditions, the Secretary may, at his or her sole and exclusive discretion, apply one or more subparts of this part as of an effective date specified to a category of employees in organizational and functional units not currently eligible for coverage because of coverage under a system established by a provision of law outside the waivable or modifiable chapters of title 5, U.S. Code, if the provision of law outside those waivable or modifiable title 5 chapters provides discretionary authority to cover employees under a given waivable or modifiable title 5 chapter or to cover them under a separate system established by the Secretary.

(2) In applying paragraph (f)(1) of this section with respect to coverage under subparts B and C of this part, the affected employees will be converted directly to the NSPS pay system from their current pay system. The Secretary may establish conversion rules for these employees similar to the conversion rules established under § 9901.373.

§ 9901.103 Definitions.

In this part:

Band means *pay band.*

Basic pay means an employee's rate of pay before any deductions and exclusive of additional pay of any kind, except as expressly provided by applicable law or regulation. For the specific purposes prescribed in § 9901.332(c) only, basic pay includes any local market supplement.

Career group means a grouping of one or more associated or related occupations. A career group may include one or more pay schedules.

Competencies means the measurable or observable knowledge, skills, abilities, behaviors, and other characteristics that an individual needs to perform a particular job or job function successfully.

Contribution means a work product, service, output, or result provided or produced by an employee or group of employees that supports the Departmental or organizational mission, goals, or objectives.

Day means a calendar day.

Department or *DoD* means the Department of Defense.

Director means the Director of the Office of Personnel Management.

Employee means an employee within the meaning of that term in 5 U.S.C. 2105.

Furlough means the placement of an employee in a temporary status without duties and pay because of lack of work or funds or other non-disciplinary reasons.

General Schedule or *GS* means the General Schedule classification and pay system established under chapter 51 and subchapter III of chapter 53 of title 5, U.S. Code.

Implementing issuance(s) means a document or documents issued by the Secretary, Deputy Secretary, Principal Staff Assistants (as authorized by the Secretary), or Secretaries of the Military Departments to carry out a policy or procedure implementing this part. These issuances may apply Department-wide or to any part of DoD as determined by the Secretary at his or her sole and exclusive discretion. These issuances do not include internal operating guidance, handbooks, or manuals that do not change conditions of employment, as defined in § 9901.903.

Initial probationary period means the period of time, as designated by the Secretary, immediately following an employee's appointment, during which an authorized management official determines whether the employee fulfills the requirements of the position to which assigned.

In-service probationary period, such as a supervisory probationary period, means the period of time, as designated by the Secretary, during which an authorized management official determines whether the employee fulfills the requirements of the position to which assigned.

Labor organization means an organization composed in whole or in part of employees, in which employees participate and pay dues, and which has as a purpose the dealing with the Department concerning grievances and conditions of employment, but does not include—

(1) An organization which, by its constitution, bylaws, tacit agreement among its members, or otherwise, denies membership because of race, color, creed, national origin, sex, age, preferential or nonpreferential civil service status, political affiliation, marital status, or handicapping condition;

(2) An organization which advocates the overthrow of the constitutional form of government of the United States;

(3) An organization sponsored by the Department; or

(4) An organization which participates in the conduct of a strike against the Government or any agency thereof or imposes a duty or obligation to conduct, assist, or participate in such a strike.

Mandatory removal offense (MRO) means an offense that the Secretary determines in his or her sole, exclusive, and unreviewable discretion has a direct and substantial adverse impact on the Department's national security mission.

Military Department means the Department of the Army, the Department of the Navy, or the Department of the Air Force.

MSPB means the Merit Systems Protection Board.

National Security Personnel System (NSPS) means the human resources management system established under 5 U.S.C. 9902(a). It does not include the labor relations system established under 5 U.S.C. 9902(m).

Occupational series means a group or family of positions performing similar types of work. Occupational series are assigned a number for workforce information purposes (for example: 0110, Economist Series; 1410, Librarian Series).

OPM means the Office of Personnel Management.

Pay band or *band* means a work level and associated pay range within a pay schedule.

Pay schedule means a set of related pay bands for a specified category of employees within a career group.

Performance means accomplishment of work assignments or responsibilities and contribution to achieving organizational goals, including an employee's behavior and professional demeanor (actions, attitude, and manner of performance), as demonstrated by his or her approach to completing work assignments.

Principal Staff Assistants means senior officials of the Office of the Secretary who report directly to the Secretary or Deputy Secretary of Defense.

Promotion means the movement of an employee from one pay band to a higher pay band under implementing issuances. This includes movement of an employee currently covered by a non-NSPS Federal personnel system to a position determined to be at a higher level of work in NSPS.

Rating of record means a performance appraisal prepared—

(1) At the end of an appraisal period covering an employee's performance of assigned duties against performance expectations over the applicable period; or

(2) As needed to reflect a substantial and sustained change in the employee's performance since the last rating of record as provided in implementing issuances.

Reassignment means the movement of an employee within DoD from his or her position of record to a different position or set of duties in the same or a comparable pay band under implementing issuances on a permanent or temporary/time-limited basis. This includes the movement of an employee between positions at a comparable level of work in NSPS and a non-NSPS Federal personnel system.

Reduction in band means the voluntary or involuntary movement of an employee from one pay band to a lower pay band under implementing issuances. This includes movement of an employee currently covered by a non-NSPS Federal personnel system to a position determined to be at a lower level of work in NSPS.

Secretary means the Secretary of Defense, consistent with 10 U.S.C. 113.

SES means the Senior Executive Service established under 5 U.S.C. chapter 31, subchapter II.

SL/ST refers to an employee serving in a senior-level position paid under 5 U.S.C. 5376. The term ''SL'' identifies a senior-level employee covered by 5 U.S.C. 3324 and 5108. The term ''ST'' identifies an employee who is appointed under the special authority in 5 U.S.C. 3325 to a scientific or professional position established under 5 U.S.C. 3104.

Unacceptable performance means performance of an employee which fails to meet one or more performance

expectations, as amplified through work assignments or other instructions, for which the employee is held individually accountable.

§ 9901.104 Scope of authority.

The authority for this part is 5 U.S.C. 9902. The provisions in the following chapters of title 5, U.S. Code, and any related regulations, may be waived or modified in exercising the authority in 5 U.S.C. 9902:

(a) Chapters 31, 33, and 35, dealing with staffing, employment, and workforce shaping (as authorized by 5 U.S.C. 9902(k));

(b) Chapter 43, dealing with performance appraisal systems;

(c) Chapter 51, dealing with General Schedule job classification;

(d) Chapter 53, dealing with pay for General Schedule employees, pay and job grading for Federal Wage System employees, and pay for certain other employees;

(e) Chapter 55, subchapter V, dealing with premium pay, except section 5545b;

(f) Chapter 71, dealing with labor relations (as authorized by 5 U.S.C. 9902(m));

(g) Chapter 75, dealing with adverse actions and certain other actions; and

(h) Chapter 77, dealing with the appeal of adverse actions and certain other actions.

§ 9901.105 Coordination with OPM.

(a) As specified in paragraphs (b) through (e) of this section, the Secretary will advise and/or coordinate with OPM in advance, as applicable, regarding the proposed promulgation of certain implementing issuances and certain other actions related to the ongoing operation of the NSPS where such actions could have a significant impact on other Federal agencies and the Federal civil service as a whole. Such pre-decisional coordination is intended as an internal DoD/OPM matter to recognize the Secretary's special authority to direct the operations of the Department of Defense pursuant to title 10, U.S. Code, as well as the Director's institutional responsibility to oversee the Federal civil service system pursuant to 5 U.S.C. chapter 11.

(b) DoD will advise OPM in advance regarding the extension of specific subparts of this part to specific categories of DoD employees under § 9901.102(b).

(c) Subpart B of this part authorizes the Secretary to establish and administer a position classification system and classify positions covered by the NSPS; in so doing, DoD will coordinate with OPM prior to—

(1) Establishing or substantially revising career groups, occupational pay schedules, and pay bands under §§ 9901.211 and 9901.212(a);

(2) Establishing alternative or additional occupational series for a particular career group or occupation under § 9901.221(b)(1) that differ from Governmentwide series and/or standards;

(3) Establishing alternative or additional classification standards for a particular career group or occupation under § 9901.221(b)(1) that differ from Governmentwide classification standards; and

(4) Establishing the process by which DoD employees may request reconsideration of classification decisions by the Secretary under § 9901.222, to ensure compatibility between DoD and OPM procedures.

(d) Subpart C of this part authorizes the Secretary to establish and administer a compensation system for employees of the Department covered by the NSPS; in so doing, DoD will coordinate with OPM prior to—

(1) Establishing maximum rates of basic pay and aggregate pay under § 9901.312 that exceed those established under 5 U.S.C. chapter 53;

(2) Establishing and adjusting pay ranges for occupational pay schedules and pay bands under §§ 9901.321(a), 9901.322(a) and (b), and 9901.372;

(3) Establishing and adjusting local market supplements under §§ 9901.332(a) and 9901.333;

(4) Establishing alternative or additional local market areas under § 9901.332(b) that differ from those established for General Schedule employees under 5 CFR 531.603;

(5) Establishing policies regarding starting rates of pay for newly appointed or transferred employees under §§ 9901.351 through 9901.354 and pay retention under § 9901.355;

(6) Establishing policies regarding premium pay under § 9901.361 that differ from those that exist in Governmentwide regulations; and

(7) Establishing policies regarding the student loan repayment program under § 9901.303(c) that differ from Governmentwide policies with respect to repayment amounts, service commitments, and reimbursement.

(e) Subpart E of this part authorizes the Secretary to establish and administer authorities for the examination and appointment of employees to certain organizational elements of the Department covered by the NSPS; in so doing, DoD will coordinate with OPM prior to—

(1) Establishing alternative or additional examining procedures under § 9901.515 that differ from those applicable to the examination of applicants for appointment to the competitive and excepted service under 5 U.S.C. chapters 31 and 33, except as otherwise provided by subpart E of this part;

(2) Establishing policies and procedures for time-limited appointments under § 9901.511(d) regarding appointment duration, advertising requirements, examining procedures, the appropriate uses of time-limited employees, and the procedures under which a time-limited employee in a competitive service position maybe be converted without further competition to the career service; and

(3) Establishing alternative or additional qualification standards for a particular occupational series, career group, occupational pay schedule, and/or pay band under § 9901.212(d) or 9901.513 that significantly differ from Governmentwide standards.

(f) Subpart F of this part authorizes the Secretary to establish and administer a workforce shaping system for employees of the Department covered by the NSPS; in so doing, DoD will coordinate with OPM prior to modifying coverage, retention procedures, or appeal rights under subpart F of this part.

(g) Section 9902(l) of title 5, U.S. Code, requires the Secretary to make a determination that the Department has in place a performance management system that meets the criteria in 5 U.S.C. 9902(b) before the Secretary may apply the human resources management system established under 5 U.S.C. 9902(a) to an organization or functional unit that exceeds 300,000 civilian employees. In making this determination, the Secretary will coordinate with the Director.

(h) When a matter requiring OPM coordination is submitted to the Secretary for decision, the Director will be provided an opportunity, as part of the Department's normal coordination process, to review and comment on the recommendations and officially concur or nonconcur with all or part of them. The Secretary will take the Director's comments and concurrence/nonconcurrence into account, advise the Director of his or her determination, and provide the Director with reasonable advance notice of the effective date of the matter. Thereafter, the Secretary and the Director may take such action(s) as they deem appropriate, consistent with their respective statutory authorities and responsibilities.

(i) The Secretary and the Director fully expect their staffs to work closely

together on the matters specified in this section, before such matters are submitted for official OPM coordination and DoD decision, so as to maximize the opportunity for consensus and agreement before an issue is so submitted.

§ 9901.106 Continuing collaboration.

(a) *Continuing collaboration with employee representatives.* (1) Consistent with 5 U.S.C. 9902, this section provides employee representatives with an opportunity to participate in the development of implementing issuances that carry out the provisions of this part. This process is the exclusive procedure for the participation of employee representatives in the planning, development, or implementation of the implementing issuances that carry out the provisions of this part. Therefore, this process is not subject to the requirements of 5 U.S.C. chapter 71, including but not limited to the exercise of management rights, enforcement of the duty to consult or negotiate, the duty to bargain and consult, or impasse procedures, or the requirements established by subpart I of this part, including but not limited to §§ 9901.910 (regarding the exercise of management rights), 9901.916(a)(5) (regarding enforcement of the duty to consult or negotiate), 9901.917 (regarding the duty to bargain and consult), and 9901.920 (regarding impasse procedures).

(2)(i) For the purpose of this section, the term ''employee representatives'' includes representatives of labor organizations with exclusive recognition rights for units of DoD employees, as determined pursuant to subpart I of this part.

(ii) The Secretary, at his or her sole and exclusive discretion, may determine the number of employee representatives to be engaged in the continuing collaboration process. However, each national labor organization with one or more bargaining units accorded exclusive recognition in the Department affected by an implementing issuance will be provided the opportunity to participate in the continuing collaboration process.

(iii) Each national labor organization with multiple collective bargaining units accorded exclusive recognition will determine how its units will be represented within the limitations imposed by the Secretary under paragraph (a)(2)(ii) of this section.

(3)(i) Within timeframes specified by the Secretary, employee representatives will be provided with an opportunity to submit written comments to, and to discuss their views and recommendations with, DoD officials on any proposed final draft implementing issuances. If views and recommendations are presented by employee representatives, the Secretary must consider these views and recommendations before taking final action. The Secretary will provide employee representatives a written statement of the reasons for taking the final action regarding the implementing issuance.

(ii) To the extent that the Secretary determines necessary, employee representatives will be provided with an opportunity to discuss their views with DoD officials and/or to submit written comments, at initial identification of implementation issues and conceptual design and/or at review of draft recommendations or alternatives.

(4) Employee representatives will be provided with access to information for their participation in the continuing collaboration process to be productive.

(5) Nothing in the continuing collaboration process will affect the right of the Secretary, Deputy Secretary, Principal Staff Assistants, or Secretaries of the Military Departments to determine the content of implementing issuances and to make them effective at any time.

(b) *Continuing collaboration with other interested organizations.* The Secretary may also establish procedures for continuing collaboration with appropriate organizations that represent the interests of a substantial number of nonbargaining unit employees.

§ 9901.107 Relationship to other provisions.

(a)(1) The provisions of title 5, U.S. Code, are waived, modified, or replaced to the extent authorized by 5 U.S.C. 9902 to conform to the provisions of this part.

(2) This part must be interpreted in a way that recognizes the critical national security mission of the Department, and each provision of this part must be construed to promote the swift, flexible, effective day-to-day accomplishment of this mission, as defined by the Secretary. The interpretation of the regulations in this part by DoD and OPM must be accorded great deference.

(b) For the purpose of applying other provisions of law or Governmentwide regulations that reference provisions under chapters 31, 33, 35, 43, 51, 53, 55 (subchapter V only), 71, 75, and 77 of title 5, U.S. Code, the referenced provisions are not waived but are modified consistent with the corresponding regulations in this part, except as otherwise provided in this part (including paragraph (c) of this section) or in implementing issuances. Applications of this rule include, but are not limited to, the following:

(1) If another provision of law or Governmentwide regulations requires coverage under one of the chapters modified or waived under this part (*i.e.*, chapters 31, 33, 35, 43, 51, 53, 55 (subchapter V only), 71, 75, and 77 of title 5, U.S. Code), DoD employees are deemed to be covered by the applicable chapter notwithstanding coverage under a system established under this part. Selected examples of provisions that continue to apply to any DoD employees (notwithstanding coverage under subparts B through I of this part) include, but are not limited to, the following:

(i) Foreign language awards for law enforcement officers under 5 U.S.C. 4521 through 4523;

(ii) Pay for firefighters under 5 U.S.C. 5545b;

(iii) Recruitment, relocation, and retention payments under 5 U.S.C. 5753 through 5754; and

(iv) Physicians' comparability allowances under 5 U.S.C. 5948.

(2) In applying the back pay law in 5 U.S.C. 5596 to DoD employees covered by subpart H of this part (dealing with appeals), the reference in section 5596(b)(1)(A)(ii) to 5 U.S.C. 7701(g) (dealing with attorney fees) is considered to be a reference to a modified section 7701(g) that is consistent with § 9901.807(f)(6).

(3) In applying the back pay law in 5 U.S.C. 5596 to DoD employees covered by subpart I of this part (dealing with labor relations), the references in section 5596 to provisions in chapter 71 are considered to be references to those particular provisions as modified by subpart I of this part.

(c) Law enforcement officer special base rates under section 403 of the Federal Employees Pay Comparability Act of 1990 (section 529 of Pub. L. 101–509) do not apply to employees who are covered by an NSPS classification and pay system established under subparts B and C of this part.

(d) Nothing in this part waives, modifies or otherwise affects the employment discrimination laws that the Equal Employment Opportunity Commission (EEOC) enforces under 42 U.S.C. 2000e *et seq.*, 29 U.S.C. 621 *et seq.*, 29 U.S.C. 791 *et seq.*, and 29 U.S.C. 206(d).

§ 9901.108 Program evaluation.

(a) The Secretary will evaluate the regulations in this part and their implementation. The Secretary will provide designated employee representatives with an opportunity to be briefed and a specified timeframe to

provide comments on the design and results of program evaluations.

(b) Involvement of employee representatives in the evaluation process does not waive the rights of any party under applicable law or regulations.

Subpart B—Classification

General

§ 9901.201 Purpose.

(a) This subpart contains regulations establishing a classification structure and rules for covered DoD employees and positions to replace the classification structure and rules in 5 U.S.C. chapter 51 and the job grading system in 5 U.S.C. chapter 53, subchapter IV, in accordance with the merit principle that equal pay should be provided for work of equal value, with appropriate consideration of both national and local rates paid by employers in the private sector, and appropriate incentives and recognition should be provided for excellence in performance.

(b) Any classification system prescribed under this subpart will be established in conjunction with the pay system described in subpart C of this part.

§ 9901.202 Coverage.

(a) This subpart applies to eligible DoD employees and positions listed in paragraph (b) of this section, subject to a determination by the Secretary under § 9901.102(b)(2).

(b) The following employees of, or positions in, DoD organizational and functional units are eligible for coverage under this subpart:

(1) Employees and positions that would otherwise be covered by the General Schedule classification system established under 5 U.S.C. chapter 51;

(2) Employees and positions that would otherwise be covered by a prevailing rate system established under 5 U.S.C. chapter 53, subchapter IV;

(3) Employees in senior-level (SL) and scientific or professional (ST) positions who would otherwise be covered by 5 U.S.C. 5376;

(4) Members of the Senior Executive Service (SES) who would otherwise be covered by 5 U.S.C. chapter 53, subchapter VIII, subject to § 9901.102(d); and

(5) Such others designated by the Secretary as DoD may be authorized to include under 5 U.S.C. 9902.

§ 9901.203 Waivers.

(a) When a specified category of employees is covered by a classification system established under this subpart, the provisions of 5 U.S.C. chapter 51 and 5 U.S.C. 5346 are waived with respect to that category of employees, except as provided in paragraph (b) of this section, §§ 9901.107, and 9901.222(d) (with respect to OPM's authority under 5 U.S.C. 5112(b) and 5346(c) to act on requests for review of classification decisions).

(b) Section 5108 of title 5, U.S. Code, dealing with the classification of positions above GS–15, is not waived for the purpose of defining and allocating senior executive service positions under 5 U.S.C. 3132 and 3133 or applying provisions of law outside the waivable and modifiable chapters of title 5, U.S. Code—*e.g.*, 5 U.S.C. 4507 and 4507a (regarding Presidential rank awards) and 5 U.S.C. 6303(f) (regarding annual leave accrual for members of the SES and employees in SL/ST positions).

§ 9901.204 Definitions.

In this subpart:

Band means *pay band.*

Basic pay has the meaning given that term in § 9901.103.

Career group has the meaning given that term in § 9901.103.

Classification, also referred to as job evaluation, means the process of analyzing and assigning a job or position to an occupational series, career group, pay schedule, and pay band for pay and other related purposes.

Competencies has the meaning given that term in § 9901.103.

Occupational series has the meaning given that term in § 9901.103.

Pay band or *band* has the meaning given that term in § 9901.103.

Pay schedule has the meaning given that term in § 9901.103.

Position or *job* means the duties, responsibilities, and related competency requirements that are assigned to an employee whom the Secretary approves for coverage under § 9901.202(a).

§ 9901.205 Bar on collective bargaining.

Pursuant to 5 U.S.C. 9902(f)(4) and (m)(7), any classification system established under this subpart is not subject to collective bargaining. This bar on collective bargaining applies to all aspects of the classification system, including, but not limited to coverage determinations, the design of the classification structure, and classification methods, criteria, and administrative procedures and arrangements.

Classification Structure

§ 9901.211 Career groups.

For the purpose of classifying positions, the Secretary may establish career groups based on factors such as mission or function; nature of work; qualifications or competencies; career or pay progression patterns; relevant labor-market features; and other characteristics of those occupations or positions. The Secretary will document in implementing issuances the criteria and rationale for grouping occupations or positions into career groups.

§ 9901.212 Pay schedules and pay bands.

(a) For purposes of identifying relative levels of work and corresponding pay ranges, the Secretary may establish one or more pay schedules within each career group.

(b) Each pay schedule may include one or more pay bands.

(c) The Secretary will document in implementing issuances the definitions for each pay band which specify the type and range of difficulty and responsibility; qualifications or competencies; or other characteristics of the work encompassed by the pay band.

(d) The Secretary will designate qualification standards and requirements for each career group, occupational series, pay schedule, and/or pay band, as provided in § 9901.513.

Classification Process

§ 9901.221 Classification Requirements.

(a) The Secretary will develop a methodology for describing and documenting the duties, qualifications, and other requirements of categories of jobs, and will make such descriptions and documentation available to affected employees.

(b) The Secretary will—

(1) Assign occupational series to jobs consistent with occupational series definitions established by OPM under 5 U.S.C. 5105 and 5346, or by DoD; and

(2) Apply the criteria and definitions required by §§ 9901.211 and 9901.212 to assign jobs to an appropriate career group, pay schedule, and pay band.

(c) The Secretary will establish procedures for classifying jobs and may make such inquiries of the duties, responsibilities, and qualification requirements of jobs as it considers necessary for the purpose of this section.

(d) Classification decisions become effective on the date an authorized official approves the classification. A classification decision is implemented by a personnel action. The personnel action implementing a classification decision must occur within four pay periods after the date of the decision. Except as provided for in § 9901.222(b), such decisions will be applied prospectively and do not convey any retroactive entitlements.

§ 9901.222 Reconsideration of classification decisions.

(a) An individual employee may request that DoD or OPM reconsider the classification (*i.e.*, pay system, career group, occupational series, official title, pay schedule, or pay band) of his or her official position of record at any time.

(b) The Secretary will establish implementing issuances for reviewing requests for reconsideration. Such issuances will include a provision stating that a retroactive effective date may be required only if the employee is wrongfully reduced in band.

(c) An employee may request OPM to review a DoD determination made under paragraph (a) of this section. If an employee does not request an OPM reconsideration decision, DoD's classification determination is final and not subject to further review or appeal.

(d) OPM's final determination on a request made under this section is not subject to further review or appeal.

(e) Any determination made under this section will be based on criteria issued by the Secretary or, where the Secretary has adopted an OPM classification standard, criteria issued by OPM.

Transitional Provisions

§ 9901.231 Conversion of positions and employees to the NSPS classification system.

(a) This section describes the transitional provisions that apply when DoD positions and employees initially are converted to a classification system established under this subpart. Affected positions and employees may convert from the GS system, a prevailing rate system, the SL/ST system, the SES system, or such other DoD systems as may be designated by the Secretary, as provided in § 9901.202. For the purpose of this section, the terms ''convert,'' ''converted,'' ''converting,'' and ''conversion'' refer to positions and employees that become covered by the NSPS classification system as a result of a coverage determination made under § 9901.102(b)(2) and exclude employees who move from a noncovered position to a position already covered by NSPS.

(b) The Secretary will issue implementing issuances prescribing policies and procedures for converting DoD employees to a pay band upon initial implementation of the NSPS classification system. Such procedures will include provisions for converting an employee who is retaining a grade under 5 U.S.C. chapter 53, subchapter VI, immediately prior to conversion. The Secretary will convert an employee's rate of pay as provided in § 9901.373.

Subpart C—Pay and Pay Administration

General

§ 9901.301 Purpose.

(a) This subpart contains regulations establishing pay structures and pay administration rules for covered DoD employees to replace the pay structures and pay administration rules established under 5 U.S.C. chapter 53 and 5 U.S.C. chapter 55, subchapter V, as authorized by 5 U.S.C. 9902. Various features that link pay to employees' performance ratings are designed to promote a high-performance culture within DoD.

(b) Any pay system prescribed under this subpart will be established in conjunction with the classification system described in subpart B of this part.

(c) Any pay system prescribed under this subpart will be established in conjunction with the performance management system described in subpart D of this part.

§ 9901.302 Coverage.

(a) This subpart applies to eligible DoD employees and positions in the categories listed in paragraph (b) of this section, subject to a determination by the Secretary under § 9901.102(b)(2).

(b) The following employees of, or positions in, DoD organizational and functional units are eligible for coverage under this subpart:

(1) Employees and positions who would otherwise be covered by the General Schedule pay system established under 5 U.S.C. chapter 53, subchapter III;

(2) Employees and positions who would otherwise be covered by a prevailing rate system established under 5 U.S.C. chapter 53, subchapter IV;

(3) Employees in senior-level (SL) and scientific or professional (ST) positions who would otherwise be covered by 5 U.S.C. 5376;

(4) Members of the Senior Executive Service (SES) who would otherwise be covered by 5 U.S.C. chapter 53, subchapter VIII, subject to § 9901.102(d); and

(5) Such others designated by the Secretary as DoD may be authorized to include under 5 U.S.C. 9902.

(c) This section does not apply in determining coverage under § 9901.361 (dealing with premium pay).

§ 9901.303 Waivers.

(a) When a specified category of employees is covered under this subpart—

(1) The provisions of 5 U.S.C. chapter 53 are waived with respect to that category of employees, except as provided in § 9901.107 and paragraphs (b) and (c) of this section; and

(2) The provisions of 5 U.S.C. chapter 55, subchapter V (except section 5545b), are waived with respect to that category of employees to the extent that those employees are covered by alternative premium pay provisions established by the Secretary under § 9901.361 in lieu of the provisions in 5 U.S.C. chapter 55, subchapter V.

(b) The following provisions of 5 U.S.C. chapter 53 are not waived:

(1) Sections 5311 through 5318, dealing with Executive Schedule positions;

(2) Section 5371, insofar as it authorizes OPM to apply the provisions of 38 U.S.C. chapter 74 to DoD employees in health care positions covered by section 5371 in lieu of any NSPS pay system established under this subpart or the following provisions of title 5, U.S. Code: Chapters 51, 53, and 61, and subchapter V of chapter 55. The reference to ''chapter 51'' in section 5371 is deemed to include a classification system established under subpart B of this part; and

(3) Section 5377, dealing with the critical pay authority.

(c) Section 5379 is modified. The Secretary may establish and administer a student loan repayment program for DoD employees, except that the Secretary may not make loan payments for any noncareer appointee in the SES (as defined in 5 U.S.C. 3132(a)(7)) or for any employee occupying a position that is excepted from the competitive service because of its confidential, policy-determining, policy-making, or policy-advocating character. Notwithstanding § 9901.302(a), any DoD employee otherwise covered by section 5379 is eligible for coverage under the provisions established under this paragraph, subject to a determination by the Secretary under § 9901.102(b)(2).

§ 9901.304 Definitions.

In this part:

Band means *pay band.*

Band rate range means the range of rates of basic pay (excluding any local market supplements) applicable to employees in a particular pay band, as described in § 9901.321. Each band rate range is defined by a minimum and maximum rate.

Basic pay has the meaning given that term in § 9901.103.

Bonus means an element of the performance payout that consists of a one-time lump-sum payment made to employees. It is not part of basic pay.

Career group has the meaning given that term in § 9901.103.

Competencies has the meaning given that term in § 9901.103.

Contribution has the meaning given that term in § 9901.103.

Contribution assessment means the determination made by the pay pool manager as to the impact, extent, and scope of contribution that the employee's performance made to the accomplishment of the organization's mission and goals.

CONUS or *Continental United States* means the States of the United States, excluding Alaska and Hawaii, but including the District of Columbia.

Extraordinary pay increase or *EPI* means a discretionary basic pay increase or bonus to reward an employee at the highest performance level who has been assigned the maximum number of shares available under the rating and contribution scheme when the payout formula does not adequately compensate them for the employee's extraordinary performance and contribution, as described in § 9901.344(b).

Local market supplement means a geographic- and occupation-based supplement to basic pay, as described in § 9901.332.

Modal rating means, for the purpose of pay administration, the most frequent rating of record assigned to employees in the same pay band within a particular pay pool for a particular rating cycle.

Pay band or *band* has the meaning given that term in § 9901.103.

Pay pool means the organizational elements/ units or other categories of employees that are combined for the purpose of determining performance payouts. Each employee is in only one pay pool at a time. *Pay pool* also means the amount designated for performance payouts to employees covered by a pay pool.

Pay schedule has the meaning given that term in § 9901.103.

Performance has the meaning given that term in § 9901.103.

Performance payout means the total monetary value of a performance pay increase and bonus provided under § 9901.342.

Performance share means a unit of performance payout awarded to an employee based on performance. Performance shares may be awarded in multiples commensurate with the employee's performance and contribution rating level.

Performance share value means a calculated value for each performance share based on pay pool funds available and the distribution of performance shares across employees within a pay pool, expressed as a percentage or fixed dollar amount.

Promotion has the meaning given that term in § 9901.103.

Rating of record has the meaning given that term in § 9901.103.

Reassignment has the meaning given that term in § 9901.103.

Reduction in band has the meaning given that term in § 9901.103.

Standard local market supplement means the local market supplement that applies to employees in a given pay schedule or band who are stationed within a specified local market area (the boundaries of which are defined under § 9901.332(b)), unless a targeted local market supplement applies.

Targeted local market supplement means a local market supplement established to address recruitment or retention difficulties or other appropriate reasons and which applies to a defined category of employees (based on occupation or other appropriate factors) in lieu of the standard local market supplement that would otherwise apply.

Unacceptable performance has the meaning given that term in § 9901.103.

§ 9901.305 Bar on collective bargaining.

Pursuant to 5 U.S.C. 9902(f)(4) and (m)(7), any pay program established under authority of this subpart is not subject to collective bargaining. This bar on collective bargaining applies to all aspects of the pay program, including but not limited to coverage decisions, the design of pay structures, the setting and adjustment of pay levels, pay administration rules and policies, and administrative procedures and arrangements.

Overview of Pay System

§ 9901.311 Major features.

Through the issuance of implementing issuances, the Secretary will establish a pay system that governs the setting and adjusting of covered employees' rates of pay and the setting of covered employees' rates of premium pay. The NSPS pay system will include the following features:

(a) A structure of rate ranges linked to various pay bands for each career group, in alignment with the classification structure described in subpart B of this part;

(b) Policies regarding the setting and adjusting of band rate ranges based on mission requirements, labor market conditions, and other factors, as described in §§ 9901.321 and 9901.322;

(c) Policies regarding the setting and adjusting of local market supplements to basic pay based on local labor market conditions and other factors, as described in §§ 9901.331 through 9901.333;

(d) Policies regarding employees' eligibility for pay increases based on adjustments in rate ranges and supplements, as described in §§ 9901.323 and 9901.334;

(e) Policies regarding performance-based pay, as described in §§ 9901.341 through 9901.345;

(f) Policies on basic pay administration, including movement between career groups, positions, pay schedules, and pay bands, as described in §§ 9901.351 through 9901.356;

(g) Linkages to employees' ratings of record, as described in subpart D of this part; and

(h) Policies regarding the setting of and limitations on premium payments, as described in § 9901.361.

§ 9901.312 Maximum rates.

The Secretary will establish limitations on maximum rates of basic pay and aggregate pay for covered employees.

§ 9901.313 National security compensation comparability.

(a) To the maximum extent practicable, for fiscal years 2004 through 2008, the overall amount allocated for compensation of the DoD civilian employees who are included in the NSPS may not be less than the amount that would have been allocated for compensation of such employees for such fiscal years if they had not been converted to the NSPS, based on at a minimum—

(1) The number and mix of employees in such organizational or functional units prior to conversion of such employees to the NSPS; and

(2) Adjustments for normal step increases and rates of promotion that would have been expected, had such employees remained in their previous pay schedule.

(b) To the maximum extent practicable, implementing issuances will provide a formula for calculating the overall amount to be allocated for fiscal years beyond fiscal year 2008 for compensation of the civilian employees included in the NSPS. The formula will ensure that in the aggregate employees are not disadvantaged in terms of the overall amount of compensation available as a result of conversion to the NSPS, while providing flexibility to accommodate changes in the function of the organization and other changed circumstances that might impact compensation levels.

(c) For the purpose of this section, ''compensation'' for civilian employees means basic pay, taking into account any applicable locality payment under 5 U.S.C. 5304, special rate supplement

under 5 U.S.C. 5305, local market supplement under § 9901.332, or similar payment under other legal authority.

Setting and Adjusting Rate Ranges

§ 9901.321 Structure.

(a) The Secretary will establish ranges of basic pay for pay bands, with minimum and maximum rates set and adjusted as provided in § 9901.322.

(b) For each pay band within a career group, the Secretary will establish a common rate range that applies in all locations.

§ 9901.322 Setting and adjusting rate ranges.

(a) Within his or her sole and exclusive discretion, the Secretary may, subject to § 9901.105(d)(2), set and adjust the rate ranges established under § 9901.321. In determining the rate ranges, the Secretary may consider mission requirements, labor market conditions, availability of funds, pay adjustments received by employees of other Federal agencies, and any other relevant factors.

(b) The Secretary may determine the effective date of newly set or adjusted band rate ranges. Established rate ranges will be reviewed for possible adjustment at least annually.

(c) The Secretary may establish different rate ranges and provide different rate range adjustments for different pay bands.

(d) The Secretary may adjust the minimum and maximum rates of a pay band by different percentages.

§ 9901.323 Eligibility for pay increase associated with a rate range adjustment.

(a) Employees with a current rating of record above ''unacceptable'' and employees who do not have a current rating of record for the most recently completed appraisal period will receive a percentage increase in basic pay equal to the percentage by which the minimum of their rate range is increased. This section does not apply to employees receiving a retained rate under § 9901.355.

(b) Employees with a current rating of record of ''unacceptable'' will not receive a pay increase under this section.

Local Market Supplements

§ 9901.331 General.

The basic pay ranges established under §§ 9901.321 through 9901.323 may be supplemented in appropriate circumstances by local market supplements, as described in §§ 9901.332, 9901.333, and 9901.334. These supplements are expressed as a percentage of basic pay and are set and adjusted as described in § 9901.333.

§ 9901.332 Local market supplements.

(a) The Secretary may establish local market supplements that apply in specified local market areas whose boundaries are set at the Secretary's sole and exclusive discretion, subject to paragraph (b) of this section and § 9901.105(d)(4). Local market supplements apply to employees whose official duty station is located in the given local market area. The Secretary may establish standard or targeted local market supplements.

(b)(1) The establishment or modification of geographic area boundaries for standard local market supplements by the Secretary will be effected by regulations which, notwithstanding 5 U.S.C. 553(a)(2), will be promulgated in accordance with the notice and comment requirements of 5 U.S.C. 553. As provided by the non-waived provisions of 5 U.S.C. 5304(f)(2) (modified here to apply to DoD regulations issued under the authority of this paragraph), judicial review of any such regulation is limited to whether or not it was promulgated in accordance with such requirements.

(2) Notwithstanding paragraph (b)(1) of this section, the Secretary's establishment of a standard local market area boundary or boundaries identical to those used for locality pay areas established under 5 U.S.C. 5304 does not require separate DoD regulations.

(c) Local market supplements are considered basic pay for only the following purposes:

(1) Retirement deductions, contributions, and benefits under 5 U.S.C. chapter 83 or 84;

(2) Life insurance premiums and benefits under 5 U.S.C. chapter 87;

(3) Premium pay under 5 U.S.C. chapter 55, subchapter V, or similar payments under other legal authority, including this subpart;

(4) Severance pay under 5 U.S.C. 5595;

(5) Cost-of-living allowances and post differentials under 5 U.S.C. 5941;

(6) Overseas allowances and differentials under 5 U.S.C. chapter 59, subchapter III, to the extent authorized by the Department of State;

(7) Recruitment, relocation, and retention incentives, supervisory differentials, and extended assignment incentives under 5 U.S.C. chapter 57, subchapter IV, and 5 CFR part 575;

(8) Lump-sum payments for accumulated and accrued annual leave under 5 CFR 550, subpart L;

(9) Determining the rate of basic pay upon conversion to the NSPS pay system as provided in § 9901.373(b);

(10) Other payments and adjustments authorized under this subpart as specified by implementing issuances;

(11) Other payments and adjustments under other statutory or regulatory authority for which locality-based comparability payments under 5 U.S.C. 5304 are considered part of basic pay; and

(12) Any provisions for which DoD local market supplements are treated as basic pay by law.

§ 9901.333 Setting and adjusting local market supplements.

(a) Within his or her sole and exclusive discretion, the Secretary may, subject to § 9901.105(d)(3), set and adjust local market supplements. In determining the amounts of the supplements, the Secretary will consider mission requirements, labor market conditions, availability of funds, pay adjustments received by employees of other Federal agencies, allowances and differentials under 5 U.S.C. chapter 59, and any other relevant factors.

(b) The Secretary may determine the effective date of newly set or adjusted local market supplements. Established supplements will be reviewed for possible adjustment at least annually in conjunction with rate range adjustments under § 9901.322.

§ 9901.334 Eligibility for pay increase associated with a supplement adjustment.

(a) When a local market supplement is adjusted under § 9901.333, employees to whom the supplement applies with a current rating of record above ''unacceptable,'' and employees who do not have a current rating of record for the most recently completed appraisal period, will receive any pay increase resulting from that adjustment.

(b) Employees with a current rating of record of ''unacceptable'' will not receive a pay increase under this section.

Performance-Based Pay

§ 9901.341 General.

Sections 9901.342 through 9901.345 describe the performance-based pay that is part of the pay system established under this subpart. These provisions are designed to provide the Secretary with the flexibility to allocate available funds to employees based on individual performance or contribution or team or organizational performance as a means of fostering a high-performance culture that supports mission accomplishment.

§ 9901.342 Performance payouts.

(a) *Overview.* (1) The NSPS pay system will be a pay-for-performance system and, when implemented, will

result in a distribution of available performance pay funds based upon individual performance, individual contribution, team or organizational performance, or a combination of those elements. The NSPS pay system will use a pay pool concept to manage, control, and distribute performance-based pay increases and bonuses. The performance payout is a function of the amount of money in the performance pay pool and the number of shares assigned to individual employees.

(2) The rating of record used as the basis for a performance pay increase is the one assigned for the most recently completed appraisal period, except that if an appropriate rating official determines that an employee's current performance is inconsistent with that rating, that rating official may prepare a more current rating of record, consistent with § 9901.409(b). Unless otherwise provided in implementing issuances, if an employee is not eligible to have a rating of record for the current rating cycle for reasons other than those identified in paragraphs (f) and (g) of this section, such employee will not be eligible for a performance payout under this part.

(3) Pay pools will be managed by a pay pool manager and/or pay pool panel. The Secretary will define in implementing issuances the responsibilities of pay pool managers and pay pool panels to include the review of proposed rating and share assignments to ensure that employees are treated fairly and consistently and in accordance with the merit system principles.

(b) *Performance pay pools.* (1) The Secretary will issue implementing issuances for the establishment and management of pay pools for performance payouts.

(2) The Secretary may determine a percentage of pay to be included in pay pools and paid out in accordance with accompanying implementing issuances as—

(i) A performance-based pay increase;

(ii) A performance-based bonus; or

(iii) A combination of a performance-based pay increase and a performance-based bonus.

(c) *Performance shares.* (1) The Secretary will issue implementing issuances regarding the assignment of a number or range of shares for each rating of record level, subject to paragraphs (c)(2) and (c)(3) of this section. Performance shares will be used to determine performance pay increases and/or bonuses.

(2) Employees with unacceptable ratings of record will be assigned zero shares.

(3) Where the Secretary establishes a range of shares for a rating of record level, he or she will provide guidance in implementing issuances on the use of share ranges. DoD organizations will notify employees at least 90 days prior to the end of the appraisal period of the factors that may be considered in making specific share assignments. Pay pool managers and/or pay pool panels will review proposed share assignments to ensure that factors are applied consistently across the pay pool and in accordance with the merit system principles.

(d) *Performance payout.* (1) The Secretary will establish a methodology that authorized officials will use to determine the value of a performance share. A performance share may be expressed as a percentage of an employee's rate of basic pay (exclusive of local market supplements under § 9901.332) or as a fixed dollar amount, or both.

(2) To determine an individual employee's performance payout, the share value determined under paragraph (d)(1) of this section will be multiplied by the number of performance shares assigned to the employee.

(3) The Secretary may provide for the establishment of control points within a band that limit increases in the rate of basic pay. The Secretary may require that certain criteria be met for increases above a control point.

(4) A performance payout may be an increase in basic pay, a bonus, or a combination of the two. However, an increase in basic pay may not cause the employee's rate of basic pay to exceed the maximum rate or applicable control point of the employee's band rate range. Implementing issuances will provide guidance for determining the payout amount and the appropriate distribution between basic pay and bonus.

(5) The Secretary will determine the effective date(s) of increases in basic pay made under this section.

(6) Notwithstanding any other provision of this section, the Secretary will issue implementing issuances to address the circumstances under which an employee receiving a retained rate under § 9901.355 may receive a lump-sum performance payout. Any performance payout in the form of a bonus for a retained rate employee may not exceed the amount that would be received by an employee in the same pay pool with the same rating of record whose rate of pay is at the maximum rate of the same band.

(e) *Proration of performance payouts.* The Secretary will issue implementing issuances regarding the proration of performance payouts for employees who, during the period between performance payouts, are—

(1) Hired, transferred, reassigned, or promoted;

(2) In a leave-without-pay status (except as provided in paragraphs (f) and (g) of this section); or

(3) In other circumstances where prorating is considered appropriate.

(f) *Adjustments for employees returning after performing honorable service in the uniformed services.* The Secretary will issue implementing issuances regarding how to set the rate of basic pay prospectively for an employee who leaves a DoD position to perform service in the uniformed services (in accordance with 38 U.S.C. 4303 and 5 CFR 353.102) and returns through the exercise of a reemployment right provided by law, Executive order, or regulation under which accrual of service for seniority-related benefits is protected (*e.g.,* 38 U.S.C. 4316). The Secretary will credit the employee with increases under § 9901.323 and increases to basic pay under this section based on the employee's DoD rating of record for the appraisal period upon which these adjustments are based. If an employee does not have a rating of record for the appraisal period serving as a basis for these adjustments, the Secretary will base such adjustments on the average basic pay increases granted to other employees in the same pay pool and pay band who received the same rating as the employee's last DoD rating of record or the modal rating, whichever is most advantageous to the employee. In unusual cases where insufficient statistical information exists to determine the modal rating or when previous ratings do not convert to the NSPS rating scale, the Secretary may establish alternative procedures for determining a basic pay increase under this section.

(g) *Adjustments for employees returning to duty after being in workers' compensation status.* The Secretary will issue implementing issuances regarding how to set the rate of basic pay prospectively for an employee who returns to duty after a period of receiving injury compensation under 5 U.S.C. chapter 81, subchapter I (in a leave-without-pay status or as a separated employee). For the intervening period, the Secretary will credit the employee with increases under § 9901.323 and increases to basic pay under this section based on the employee's DoD rating of record for the appraisal period upon which these adjustments are based. If an employee does not have a rating of record for the appraisal period serving as a basis for these adjustments, such adjustments

will be based on the average basic pay increases granted to other employees in the same pay pool and pay band who received the same rating as the employee's last DoD rating of record or the modal rating, whichever is most advantageous to the employee. In unusual cases where insufficient statistical information exists to determine the modal rating or when previous ratings do not convert to the NSPS rating scale, the Secretary may establish alternative procedures for determining a basic pay increase under this section.

§ 9901.343 Pay reduction based on unacceptable performance and/or conduct.

An employee's rate of basic pay may be reduced based on a determination of unacceptable performance, conduct, or both. Such reduction may not exceed 10 percent unless the employee has been changed to a lower pay band and a greater reduction is needed to set the employee's pay at the maximum rate of the pay band. (See also §§ 9901.352 and 9901.354.) An employee's rate of basic pay may not be reduced more than once in a 12-month period based on unacceptable performance, conduct, or both.

§ 9901.344 Other performance payments.

(a) In accordance with implementing issuances authorized officials may make other payments to—

(1) Recognize organizational or team achievement;

(2) Reward extraordinary individual performance through an extraordinary pay increase (EPI), as described in paragraph (b) of this section; and

(3) Provide for other special circumstances.

(b) An EPI is paid in addition to performance payouts under § 9901.342 and will usually be made effective at the time of those payouts. The future performance and contribution level exhibited by the employee will be expected to continue at an extraordinarily high level.

§ 9901.345 Treatment of developmental positions.

The Secretary may issue implementing issuances regarding pay increases for developmental positions. These issuances may require employees to meet certain standardized assessment or certification points as part of a formal training/developmental program. The Secretary may provide adjustments under this section in lieu of or in addition to adjustments under § 9901.342.

Pay Administration

§ 9901.351 Setting an employee's starting pay.

Subject to implementing issuances, the Secretary may set the starting rate of pay for individuals who are newly appointed or reappointed to the Federal service anywhere within the assigned pay band.

§ 9901.352 Setting pay upon reassignment.

(a) Subject to paragraphs (b) and (c) of this section and subject to implementing issuances, the Secretary may set pay anywhere within the assigned pay band when an employee is reassigned, either voluntarily or involuntarily, to a position in the same or comparable pay band.

(b) Subject to the adverse action procedures set forth in subpart G of this part and implementing issuances (or other appropriate adverse action procedures for employees not covered by subpart G of this part, such as procedures for National Guard Technicians under 32 U.S.C. 709(f)), the Secretary may reduce an employee's rate of basic pay within a pay band for unacceptable performance and/or conduct. A reduction in pay under this paragraph may not be more than 10 percent or cause an employee's rate of basic pay to fall below the minimum rate of the employee's pay band. Such a reduction may be made effective at any time.

(c) The Secretary will prescribe policies in implementing issuances regarding setting pay for an employee whose pay is reduced involuntarily, but not through adverse action procedures. In the case of completion of a temporary reassignment or failure to successfully complete an in-service probationary period, the employee's rate of basic pay will be set at the same rate the employee received prior to the temporary reassignment or placement in the position requiring the probationary period, with appropriate adjustment of the employee's rate of basic pay based on rate range increases or performance payouts that occurred during the time the employee was assigned to the new position. Any resulting reduction in basic pay is not considered an adverse action under subpart G of this part (or similar authority).

§ 9901.353 Setting pay upon promotion.

Except as otherwise provided in implementing issuances, upon an employee's promotion, the employee will receive an increase in his or her rate of basic pay equal to at least 6 percent, unless this minimum increase results in a rate of basic pay higher than the maximum rate of the applicable pay band. An employee's rate of basic pay upon promotion may not be less than the minimum of the rate range.

§ 9901.354 Setting pay upon reduction in band.

(a) Subject to paragraphs (b) and (c) of this section, pay may be set anywhere within the assigned pay band when an employee is reduced in band, either voluntarily or involuntarily. As applicable, pay retention provisions established under § 9901.355 will apply.

(b) Subject to the adverse action procedures set forth in subpart G of this part (or other appropriate adverse action procedures for employees not covered by subpart G of this part, such as procedures for National Guard Technicians under 32 U.S.C. 709(f)), the Secretary may assign an employee involuntarily to a position in a lower pay band for unacceptable performance and/or conduct, and may simultaneously reduce the employee's rate of basic pay. A reduction in basic pay under this paragraph may not cause an employee's rate of basic pay to fall below the minimum rate of the employee's new pay band, or be more than 10 percent unless a larger reduction is needed to place the employee at the maximum rate of the lower band.

(c) The Secretary will prescribe policies in implementing issuances regarding setting pay for an employee who is reduced in band involuntarily, but not through adverse action procedures. In the case of termination of a temporary promotion or failure to successfully complete an in-service probationary period, the employee's rate of basic pay will be set at the same rate the employee received prior to the temporary promotion or placement in the position requiring the probationary period, with appropriate adjustment of the employee's rate of basic pay based on rate range increases or performance payouts that occurred during the time the employee was assigned to the new position. Any resulting reduction in basic pay is not considered an adverse action under subpart G of this part (or similar authority).

§ 9901.355 Pay retention.

(a) Subject to the requirements of this section, the Secretary will issue implementing issuances regarding pay retention. Pay retention prevents a reduction in basic pay that would otherwise occur by preserving the former rate of basic pay within the employee's new pay band or by establishing a retained rate that exceeds

the maximum rate of the new pay band. Local market supplements are not considered part of basic pay in applying pay retention.

(b) Pay retention will be based on the employee's rate of basic pay in effect immediately before the action that would otherwise reduce the employee's rate. A retained rate will be compared to the range of rates of basic pay applicable to the employee's position.

(c) Subject to any employee eligibility requirements the Secretary may prescribe, pay retention will apply when an employee is reduced in band through reduction in force (RIF), reclassification, or other appropriate circumstances, as specified in implementing issuances. Pay retention will be granted for a period of 2 years (that is, 104 weeks).

(d) Employees entitled to a retained rate will receive any performance payouts in the form of bonuses, rather than salary adjustments, as provided in § 9901.342(d)(6).

(e) Employees entitled to a retained rate will not receive minimum rate range adjustments under § 9901.323(a), but are entitled to receive any applicable local market supplement adjustments under § 9901.334(a).

§ 9901.356 Miscellaneous.

(a) Except in the case of an employee who does not receive a pay increase under § 9901.323 because of an unacceptable rating of record, an employee's rate of basic pay may not be less than the minimum rate of the employee's pay band.

(b) Except as provided in § 9901.355, an employee's rate of basic pay may not exceed the maximum rate of the employee's band rate range.

(c) The Secretary will follow the rules for establishing pay periods and computing rates of pay in 5 U.S.C. 5504 and 5505, as applicable. For employees covered by 5 U.S.C. 5504, annual rates of pay will be converted to hourly rates of pay in computing payments received by covered employees.

(d) The Secretary may promulgate implementing issuances that provide for a special increase prior to an employee's movement in recognition of the fact that the employee will not be eligible for a promotion increase under the GS system, if a DoD employee moves from the pay system established under this subpart to a GS position having a higher level of duties and responsibilities.

Premium Pay

§ 9901.361 General.

(a) This section applies to eligible DoD employees and positions which would otherwise be covered by 5 U.S.C. chapter 55, subchapter V, subject to a determination by the Secretary under § 9901.102(b)(2). As provided in § 9901.303(a)(2), for employees covered by such a determination, the provisions of 5 U.S.C. chapter 55, subchapter V (except section 5545b), are waived or modified to the extent that the Secretary establishes alternative premium pay provisions for such employees in lieu of the provisions in 5 U.S.C. chapter 55, subchapter V.

(b) The Secretary may establish alternative or additional forms of premium pay, or make modifications in premium payments under 5 U.S.C. chapter 55, subchapter V (except section 5545b), for specified categories of employees through implementing issuances. The types of premium payments the Secretary may establish or modify include, but are not limited to—

(1) Overtime pay (excluding overtime pay under the Fair Labor Standards Act);

(2) Compensatory time off;

(3) Sunday, holiday, and night pay;

(4) Annual premium pay for standby duty and administratively uncontrollable overtime work;

(5) Availability pay for criminal investigators; and

(6) Hazardous duty differentials.

(c) The Secretary will determine the conditions of eligibility for the amounts of and the limitations on payments made under the authority of this section.

Conversion Provisions

§ 9901.371 General.

(a) This section and §§ 9901.372 and 9901.373 describe the provisions that apply when DoD employees are converted to the NSPS pay system established under this subpart. An affected employee may convert from the GS system, a prevailing rate system, the SL/ST system, or the SES system (or such other systems designated by the Secretary as DoD may be authorized to include under 5 U.S.C. 9902), as provided in § 9901.302. For the purpose of this section and §§ 9901.372 and 9901.373, the terms ''convert,'' ''converted,'' ''converting,'' and ''conversion'' refer to employees who become covered by the pay system without a change in position (as a result of a coverage determination made under § 9901.102(b)(2)) and exclude employees who move from a noncovered position to a position already covered by the NSPS pay system.

(b) The Secretary will issue implementing issuances prescribing the policies and procedures necessary to implement these transitional provisions.

§ 9901.372 Creating initial pay ranges.

DoD will set the initial band rate ranges for the NSPS pay system established under this subpart. The initial ranges may link to the ranges that apply to converted employees in their previously applicable pay system (taking into account any applicable locality payment under 5 U.S.C. 5304, special rate supplement under 5 U.S.C. 5305, local market supplement under § 9901.332, or similar payment under other legal authority).

§ 9901.373 Conversion of employees to the NSPS pay system.

(a) When the NSPS pay system is established under this subpart and applied to a category of employees, employees will be converted to the system without a reduction in their rate of pay (including basic pay and any applicable locality payment under 5 U.S.C. 5304, special rate supplement under 5 U.S.C. 5305, local market supplement under § 9901.332, or similar payment under other legal authority).

(b) When an employee receiving a special rate under 5 U.S.C. 5305 before conversion is converted to an equal rate of pay under the NSPS pay system that consists of a basic rate and a local market supplement, the conversion is not a reduction in pay for the purpose of applying subpart G of this part (or similar authority).

(c) If another personnel action (*e.g.*, promotion, geographic movement) takes effect on the same day as the effective date of an employee's conversion to the new pay system, the other action will be processed under the rules pertaining to the employee's former system before processing the conversion action.

(d) An employee on a temporary promotion at the time of conversion will be returned to his or her official position of record prior to processing the conversion. If the employee is temporarily promoted immediately after the conversion, pay will be set under the rules for promotion increases under the NSPS pay system.

(e) The Secretary has discretion to make one-time pay adjustments for employees when they are converted to the NSPS pay system. The Secretary will issue implementing issuances governing any such pay adjustment, including rules governing employee eligibility, pay computations, and the timing of any such pay adjustment.

Subpart D—Performance Management

§ 9901.401 Purpose.

(a) This subpart provides for the establishment in DoD of a performance

management system as authorized by 5 U.S.C. 9902.

(b) The performance management system established under this subpart is designed to promote and sustain a high-performance culture by incorporating the following elements:

(1) Adherence to merit principles set forth in 5 U.S.C. 2301;

(2) A fair, credible, and transparent employee performance appraisal system;

(3) A link between the performance management system and DoD's strategic plan;

(4) A means for ensuring employee involvement in the design and implementation of the system;

(5) Adequate training and retraining for supervisors, managers, and employees in the implementation and operation of the performance management system;

(6) A process for ensuring ongoing performance feedback and dialogue among supervisors, managers, and employees throughout the appraisal period, and setting timetables for review;

(7) Effective safeguards to ensure that the management of the system is fair and equitable and based on employee performance;

(8) A means for ensuring that adequate agency resources are allocated for the design, implementation, and administration of the performance management system; and

(9) A pay-for-performance evaluation system to better link individual pay to performance, and provide an equitable method for appraising and compensating employees.

§ 9901.402 Coverage.

(a) This subpart applies to eligible DoD employees and positions in the categories listed in paragraph (b) of this section, subject to a determination by the Secretary under § 9901.102(b)(2), except as provided in paragraph (c) of this section.

(b) The following employees and positions in DoD organizational and functional units are eligible for coverage under this subpart:

(1) Employees and positions who would otherwise be covered by 5 U.S.C. chapter 43;

(2) Employees and positions who were excluded from chapter 43 by OPM under 5 CFR 430.202(d) prior to the date of coverage of this subpart; and

(3) Such others designated by the Secretary as DoD may be authorized to include under 5 U.S.C. 9902.

(c) This subpart does not apply to employees who have been, or are expected to be, employed in an NSPS position for less than a minimum period (as defined in § 9901.404) during a single 12-month period.

§ 9901.403 Waivers.

When a specified category or group of employees is covered by the performance management system(s) established under this subpart, the provisions of 5 U.S.C. chapter 43 are waived with respect to that category of employees.

§ 9901.404 Definitions.

In this subpart—

Appraisal means the review and evaluation of an employee's performance.

Appraisal period means the period of time established under a performance management system for reviewing employee performance.

Competencies has the meaning given that term in § 9901.103.

Contribution has the meaning given that term in § 9901.103.

Minimum period means the period of time established by the Secretary during which an employee will perform under applicable performance expectations before receiving a rating of record.

Pay-for-performance evaluation system means the performance management system established under this subpart to link individual pay to performance and provide an equitable method for appraising and compensating employees.

Performance has the meaning given that term in § 9901.103.

Performance expectations means the duties, responsibilities, and competencies required by, or objectives associated with, an employee's position and the contributions and demonstrated competencies management expects of an employee, as described in § 9901.406(d).

Performance management means applying the integrated processes of setting and communicating performance expectations, monitoring performance and providing feedback, developing performance and addressing poor performance, and rating and rewarding performance in support of the organization's goals and objectives.

Performance management system means the policies and requirements established under this subpart, as supplemented by implementing issuances, for setting and communicating employee performance expectations, monitoring performance and providing feedback, developing performance and addressing poor performance, and rating and rewarding performance. It incorporates the elements set forth in § 9901.401(b).

Rating of record has the meaning given that term in § 9901.103.

Unacceptable performance has the meaning given that term in § 9901.103.

§ 9901.405 Performance management system requirements.

(a) The Secretary will issue implementing issuances that establish a performance management system for DoD employees, subject to the requirements set forth in this subpart.

(b) The NSPS performance management system will—

(1) Specify the employees covered by the system(s);

(2) Provide for the appraisal of the performance of each employee at least annually;

(3) Specify the minimum period during which an employee will perform before being eligible to receive a rating of record;

(4) Hold supervisors and managers accountable for effectively managing the performance of employees under their supervision as set forth in paragraph (c) of this section;

(5) Specify procedures for setting and communicating performance expectations, monitoring performance and providing feedback, and developing, rating, and rewarding performance; and

(6) Specify the criteria and procedures to address the performance of employees who are detailed or transferred and for employees in other special circumstances.

(c) In fulfilling the requirements of paragraph (b) of this section, supervisors and managers are responsible for—

(1) Clearly communicating performance expectations and holding employees responsible for accomplishing them;

(2) Making meaningful distinctions among employees based on performance and contribution;

(3) Fostering and rewarding excellent performance;

(4) Addressing poor performance; and

(5) Assuring that employees are assigned a rating of record when required by implementing issuances.

§ 9901.406 Setting and communicating performance expectations.

(a) Performance expectations will support and align with the DoD mission and its strategic goals, organizational program and policy objectives, annual performance plans, and other measures of performance.

(b) Performance expectations will be communicated in writing, including those that may affect an employee's retention in the job. Performance expectations will be communicated to the employee prior to holding the employee accountable for them.

However, notwithstanding this requirement, employees are always accountable for demonstrating professionalism and standards of appropriate conduct and behavior, such as civility and respect for others.

(c) Performance expectations for supervisors and managers will include assessment and measurements of how well supervisors and managers plan, monitor, develop, correct, and assess subordinate employees' performance.

(d) Performance expectations may include—

(1) Goals or objectives that set general or specific performance targets at the individual, team, and/or organizational level;

(2) Organizational, occupational, or other work requirements, such as standard operating procedures, operating instructions, manuals, internal rules and directives, and/or other instructions that are generally applicable and available to the employee; and

(3) Competencies an employee is expected to demonstrate on the job, and/or the contributions an employee is expected to make.

(e) Performance expectations may be amplified through particular work assignments or other instructions (which may specify the quality, quantity, accuracy, timeliness, or other expected characteristics of the completed assignment, or some combination of such characteristics). Such assignments and instructions need not be in writing.

(f) Supervisors will involve employees, insofar as practicable, in the development of their performance expectations. However, final decisions regarding performance expectations are within the sole and exclusive discretion of management.

§ 9901.407 Monitoring performance and providing feedback.

In applying the requirements of the performance management system and its implementing issuances and policies, supervisors will—

(a) Monitor the performance of their employees and their contribution to the organization; and

(b) Provide ongoing (*i.e.,* regular and timely) feedback to employees on their actual performance with respect to their performance expectations, including one or more interim performance reviews during each appraisal period.

§ 9901.408 Developing performance and addressing poor performance.

(a) Implementing issuances will prescribe procedures that supervisors will use to develop employee performance and to address poor performance.

(b) If at any time during the appraisal period a supervisor determines that an employee's performance is unacceptable, the supervisor will—

(1) Consider the range of options available to address the performance deficiency, which include, but are not limited to, remedial training, an improvement period, a reassignment, an oral warning, a letter of counseling, a written reprimand, or adverse action as defined in subpart G of this part, including a reduction in rate of basic pay or pay band; and

(2) Take appropriate action to address the deficiency, taking into account the circumstances, including the nature and gravity of the unacceptable performance and its consequences.

(c) As specified in subpart H of this part (or other appropriate appeal procedures, if not covered by subpart H of this part, such as procedures for National Guard Technicians under 32 U.S.C. 709(f)), employees may appeal adverse actions (*e.g.,* suspensions of more than 14 days, reductions in pay and pay band, and removal) based on unacceptable performance and/or conduct.

§ 9901.409 Rating and rewarding performance.

(a) The NSPS performance management system will establish a multi-level rating system as described in the implementing issuances.

(b) An appropriate rating official will prepare and issue a rating of record after the completion of the appraisal period. In accordance with implementing issuances, an additional rating of record may be issued to reflect a substantial and sustained change in the employee's performance since the last rating of record. A rating of record will be used as a basis for—

(1) A pay determination under any applicable pay rules;

(2) Determining reduction in force retention standing; and

(3) Such other action that the Secretary considers appropriate, as specified in implementing issuances.

(c) A rating of record will assess an employee's performance with respect to his or her performance expectations, as amplified through work assignments or other instructions, and/or relative contributions and is considered final when issued to the employee with all appropriate reviews and signatures.

(d) An appropriate rating official will communicate the rating of record and number of shares to the employee prior to payout.

(e) A rating of record issued under this subpart is an official rating of record for the purpose of any provision of title 5, Code of Federal Regulations, for which an official rating of record is required. Ratings of record will be transferred between subordinate organizations and to other Federal departments or agencies in accordance with implementing issuances.

(f) The Secretary may not lower the rating of record of an employee based on an approved absence from work, including the absence of a disabled veteran to seek medical treatment as provided in Executive Order 5396.

(g) A rating of record may be challenged by a nonbargaining unit employee only through a reconsideration process as provided in implementing issuances. This process will be the sole and exclusive method for all nonbargaining unit employees to challenge a rating of record. A payout determination will not be subject to the reconsideration process.

(h) A bargaining unit employee may choose a negotiated grievance procedure or the administrative reconsideration process established under paragraph (g) of this section, but not both, to challenge his or her rating of record. An employee who chooses the administrative reconsideration process may not revert to a negotiated grievance procedure. A payout determination will not be subject to the negotiated grievance procedure. Any individual or panel reviewing a rating of record under a negotiated grievance procedure may not conduct an independent evaluation of the employee's performance, determine the appropriate share payout, or otherwise substitute his or her judgment for that of the rating official.

(i) A supervisor or other rating official may prepare an additional performance appraisal for the purposes specified in the applicable performance management system (*e.g.,* transfers and details) at any time after the completion of the minimum period. Such an appraisal is not a rating of record.

(j) Implementing issuances will establish policies and procedures for crediting performance in a reduction in force in accordance with subpart F of this part (or other appropriate workforce shaping procedures for those not covered by subpart F of this part, such as National Guard Technicians under 32 U.S.C. 709).

Subpart E—Staffing and Employment

General

§ 9901.501 Purpose.

(a) This subpart sets forth policies and procedures for the establishment of qualification requirements; recruitment

for, and appointment to, positions; and assignment, reassignment, detail, transfer, or promotion of employees, consistent with 5 U.S.C. 9902(a) and (k).

(b) The Secretary will comply with merit principles set forth in 5 U.S.C. 2301 and with 5 U.S.C. 2302 (dealing with prohibited personnel practices).

(c) The Secretary will adhere to veterans' preference principles set forth in 5 U.S.C. 2302(b)(11), consistent with 5 U.S.C. 9902(a) and (k).

§ 9901.502 Scope of authority.

When a specified category of employees, applicants, and positions is covered by the system established under this subpart, the provisions of 5 U.S.C. 3301, 3302, 3304, 3317(a), 3318 and 3319 (except with respect to veterans' preference), 3321, 3324, 3325, 3327, 3330, 3341, and 5112(a) are modified and replaced with respect to that category, except as otherwise specified in this subpart. In accordance with § 9901.105, the Secretary will prescribe implementing issuances to carry out the provisions of this subpart.

§ 9901.503 Coverage.

(a) This subpart applies to eligible DoD employees and positions in the categories listed in paragraph (b) of this section, subject to a determination by the Secretary under § 9901.102(b).

(b) The following employees and positions in DoD organizational and functional units are eligible for coverage under this subpart:

(1) Employees and positions who would otherwise be covered by 5 U.S.C. chapters 31 and 33 (excluding members of the Senior Executive Service); and

(2) Such others designated by the Secretary as DoD may be authorized to include under 5 U.S.C. 9902.

§ 9901.504 Definitions.

In this subpart—

Career employee means an individual appointed without time limit to a competitive or excepted service position in the Federal career service.

Initial probationary period has the meaning given that term in § 9901.103.

In-service probationary period has the meaning given that term in § 9901.103.

Promotion has the meaning given that term in § 9901.103.

Reassignment has the meaning given that term in § 9901.103.

Reduction in band has the meaning given that term in § 9901.103.

Temporary employee means an individual not on a career appointment who is employed for a limited period of time not to exceed 1 year. The appointment may be extended, up to a maximum established by implementing issuances, to perform the work of a position that does not require an additional permanent employee.

Term employee means an individual not on a career appointment who is employed for a period of more than 1 year up to a maximum established by implementing issuances, when the need for an employee's service is not permanent.

Time-limited employee means an individual appointed to a position for a period of limited duration (e.g., term or temporary) in either the competitive or excepted service.

External Recruitment and Internal Placement

§ 9901.511 Appointing authorities.

(a) *Competitive and excepted appointing authorities.* The Secretary may continue to use excepted and competitive appointing authorities and entitlements under chapters 31 and 33 of title 5, U.S. Code, Governmentwide regulations, or Executive orders, as well as other statutes, and those individuals will be given career or time-limited appointments, as appropriate.

(b) *Additional appointing authorities.* (1) The Secretary and the Director may enter into written agreements providing for new excepted and competitive appointing authorities for positions covered by the National Security Personnel System, including noncompetitive appointments, and excepted appointments that may lead to a subsequent noncompetitive appointment to the competitive service.

(2)(i) DoD and OPM will jointly publish a notice in the **Federal Register** when establishing a new competitive appointing authority or a new excepted appointing authority that may lead to a subsequent noncompetitive appointment to a competitive position in the career service. DoD and OPM will issue a notice with a public comment period before establishing such authority, except as provided in paragraph (b)(2)(ii) of this section.

(ii) If the Secretary determines that a critical mission requirement exists, DoD and OPM may establish a new appointing authority as described in paragraph (b)(2)(i) of this section effective upon publication of a **Federal Register** notice without a preceding comment period. However, the notice will invite public comments, and DoD and OPM will issue another notice if the authority is revised based on those comments.

(3) The Secretary will prescribe appropriate implementing issuances to administer a new appointing authority established under paragraph (b) of this section.

(4) At least annually, a consolidated list of all appointing authorities established under this section and currently in effect will be published in the **Federal Register**.

(c) *Severe shortage/critical need hiring authority.* (1) The Secretary may determine that there is a severe shortage of candidates or a critical hiring need, as defined in 5 U.S.C. 3304(a)(3) and 5 CFR part 337, subpart B, for particular occupations, pay bands, career groups, and/or geographic locations, and establish a specific authority to make appointments without regard to § 9901.515. Public notice will be provided in accordance with 5 U.S.C. 3304(a)(3)(A).

(2) For each specific authority, the Secretary will document the basis for the severe shortage or critical hiring need, consistent with 5 CFR 337.204(b) or 337.205(b), as applicable.

(3) The Secretary will terminate or modify a specific authority to make appointments under this section when it determines that the severe shortage or critical need upon which the authority was based no longer exists.

(4) The Secretary will prescribe appropriate implementing issuances to administer this authority and will notify OPM of determinations made under this section.

(d) *Time-limited appointing authorities.* (1) The Secretary may prescribe the procedures for appointing employees, the duration of such appointments, and the appropriate uses of time-limited employees. These procedures will preclude the use of employees on term appointments in positions that should be filled on a permanent basis. Term appointments may be used to accomplish permanent work in circumstances where the position cannot be filled permanently, *e.g.*, the incumbent will be out of the position for a significant period of time, but is expected to return.

(2) The Secretary will prescribe implementing issuances establishing the procedures under which a time-limited employee serving in a competitive service position may be converted without further competition to the career service if—

(i) The vacancy announcement met the requirements of § 9901.515(a) and included the possibility of noncompetitive conversion to a competitive position in the career service at a later date;

(ii) The individual was appointed using the competitive examining procedures set forth in § 9901.515(b) and (c); and

(iii) The employee completed at least 2 years of continuous service at the fully successful level of performance or better.

§ 9901.512 Probationary periods.

(a) The Secretary may establish initial probationary periods of at least 1 year, but not to exceed 3 years, as deemed appropriate for employees appointed to positions in the competitive and excepted service covered by NSPS. The Secretary will prescribe the conditions for such periods, such as creditable service, in implementing issuances. Initial probationary periods established for more than 1 year will be applied to categories of positions or types of work that require a longer time period to evaluate the employee's ability to perform the work. A preference eligible who has completed 1 year of an initial probationary period is covered by subparts G and H of this part.

(b) The Secretary may establish in-service probationary periods. The Secretary will prescribe the conditions for such periods, such as creditable service and groups of positions or occupations to be covered, in implementing issuances. An employee who does not satisfactorily complete an in-service probationary period will be returned to a grade or band no lower than that held before the in-service probationary period and will have his or her rate of basic pay set in accordance with § 9901.352(c) or 9901.354(c), as applicable. Nothing in this section prohibits an action against an individual serving an in-service probationary period for cause unrelated to performance.

§ 9901.513 Qualification standards.

The Secretary may continue to use qualification standards established or approved by OPM. The Secretary also may establish qualification standards for positions covered by NSPS.

§ 9901.514 Non-citizen hiring.

The Secretary may establish procedures for appointing non-citizens to positions within NSPS under the following conditions:

(a) In the absence of a qualified U.S. citizen, the Secretary may appoint a qualified non-citizen in the excepted service; and

(b) Immigration and security requirements will apply to these appointments.

§ 9901.515 Competitive examining procedures.

(a) In recruiting applicants from outside of the civil service for competitive appointments to competitive service positions in NSPS, the Secretary will provide public notice for all vacancies in the career service in accordance with 5 CFR part 330 and—

(1) Will accept applications for the vacant position from all U.S. citizens;

(2) Will, at a minimum, consider applicants from the local commuting area;

(3) May concurrently consider applicants from other targeted recruitment areas, as specified in the vacancy announcement, in addition to those applicants from the minimum area of consideration; and

(4) May consider applicants from outside that minimum area(s) of consideration as necessary to provide sufficient qualified candidates.

(b) The Secretary may establish procedures for the examination of applicants for entry into competitive and excepted service positions in the National Security Personnel System. Such procedures will adhere to the merit system principles in 5 U.S.C. 2301 and veterans' preference requirements as set forth in 5 U.S.C. 1302(b) and (c) and 3309 through 3320, as applicable, and will be available in writing for applicant review. These procedures will also include provisions for employees entitled to priority consideration referred to in 5 U.S.C. 8151.

(c) In establishing examining procedures for appointing employees in the competitive service under paragraph (b) of this section, the Secretary may use traditional numerical rating and ranking or alternative ranking and selection procedures (category rating) in accordance with 5 U.S.C. 3319(b) and (c).

(d) The Secretary will apply the requirements of paragraphs (a) through (c) of this section to the recruitment of applicants for time-limited positions in the competitive service in order to qualify an appointee for noncompetitive conversion to a competitive position in the career service, in accordance with § 9901.511.

§ 9901.516 Internal placement.

The Secretary may prescribe implementing issuances regarding the assignment, reassignment, reinstatement, detail, transfer, and promotion of individuals or employees into or within NSPS. Such implementing issuances will be made available to applicants and employees. Internal placement actions may be made on a permanent or temporary basis using competitive and noncompetitive procedures. Those exceptions to competitive procedures set forth in 5 CFR part 335 apply to NSPS.

Subpart F—Workforce Shaping

§ 9901.601 Purpose and applicability.

This subpart contains the regulations implementing the provisions of 5 U.S.C. 9902(k) concerning the Department's system for realigning, reorganizing, and reshaping its workforce. This subpart applies to categories of positions and employees affected by such actions resulting from the planned elimination, addition, or redistribution of functions, duties, or skills within or among organizational units, including realigning, reshaping, delayering, and similar organizational-based restructuring actions. This subpart does not apply to actions involving the conduct and/or performance of individual employees, which are covered by subpart G of this part.

§ 9901.602 Scope of authority.

When a specified category of employees is covered by the system established under this subpart, the provisions of 5 U.S.C. 3501 through 3503 (except with respect to veterans' preference) are modified and replaced with respect to that category, except as otherwise specified in this subpart. In accordance with § 9901.105, the Secretary will prescribe implementing issuances to carry out the provisions of this subpart.

§ 9901.603 Definitions.

In this subpart:

Competing employee means a career employee (including an employee serving an initial probationary period), an employee serving on a term appointment, and other employees as identified in implementing issuances.

Competitive area means the boundaries within which employees compete for retention under this subpart, based on factors described in § 9901.605(a).

Competitive group means employees within a competitive area who are on a common retention list for the purpose of exercising displacement rights.

Displacement right means the right of an employee who is displaced from his or her present position because of position abolishment, or because of displacement resulting from the abolishment of a higher-standing employee on the retention list, to displace a lower-standing employee on the list on the basis of the retention factors.

Modal rating means, for the purpose of reduction in force, the rating of record that occurs most frequently in a particular competitive group.

Notice means a written communication to an individual

employee stating that the employee will be displaced from his or her position as a result of a reduction in force action under this subpart.

Rating of record has the meaning given that term in § 9901.103.

Retention factors means tenure, veterans' preference, performance, length of service, and such other factors as the Secretary considers necessary and appropriate to rank employees within a particular retention list.

Retention list means a list of all competing employees occupying positions in the competitive area, who are grouped in the same competitive group on the basis of retention factors. While all positions in the competitive group are listed, only competing employees have retention standing.

Tenure group means a group of employees with a given appointment type. In a reduction in force, employees are first placed in a tenure group and then ranked within that group according to other retention factors.

Undue interruption means a degree of interruption that would prevent the completion of required work by an employee within 90 days after the employee has been placed in a different position.

§ 9901.604 Coverage.

(a) *Employees covered.* The following employees and positions in DoD organizational and functional units are eligible for coverage under this subpart:

(1) Employees and positions who would otherwise be covered by 5 U.S.C. chapter 35 (excluding members of the Senior Executive Service and employees who are excluded from coverage by other statutory authority); and

(2) Such others designated by the Secretary as DoD may be authorized to include under 5 U.S.C. 9902.

(b) *Actions covered.* (1) *Reduction in force.* This subpart will apply when a displacement action occurs within a retention list or when releasing a competing employee from a retention list by separation, reduction in band, or assignment involving displacement, and the release results from an action described in § 9901.601.

(2) *Transfer of function.* The Secretary will issue implementing issuances consistent with 5 U.S.C. 3503 prescribing procedures to be used when a function transfers from one competitive area to a different competitive area.

(3) *Furlough.* The provisions in 5 CFR 351.604 will apply when furloughing a competing employee for more than 30 consecutive calendar days, or more than 22 workdays in 1 calendar year if done on a discontinuous basis, except as otherwise provided in this subpart.

(c) *Actions excluded.* This subpart does not apply to—

(1) The termination of a temporary promotion or temporary reassignment and the subsequent return of an employee to the position held before the temporary promotion or temporary reassignment (or to a position with comparable pay band, pay, status, and tenure);

(2) A reduction in band based on the reclassification of an employee's position due to the application of new classification standards or the correction of a classification error or classification actions covered under § 9901.222;

(3) Placement of an employee serving on a seasonal basis in a nonpay, nonduty status in accordance with conditions established at time of appointment;

(4) A change in an employee's work schedule from other-than-full-time to full-time;

(5) A change in an employee's mixed tour work schedule in accordance with conditions established at time of appointment;

(6) A change in the scheduled tour of duty of an other-than-full-time schedule;

(7) A reduction in band based on the reclassification of an employee's position due to erosion of duties, except that this exclusion does not apply to such reclassification actions that will take effect after an agency has formally announced a reduction in force in the employee's competitive area and when the reduction in force will take effect within 180 days; or

(8) Any other personnel action not covered by paragraph (b) of this section.

§ 9901.605 Competitive area.

(a) *Basis for competitive area.* The Secretary may establish a competitive area on the basis of one or more of the following considerations:

(1) Geographical location(s);

(2) Line(s) of business;

(3) Product line(s);

(4) Organizational unit(s); and

(5) Funding line(s).

(b) *Employees included in competitive area.* A competitive area will include all competing employees holding official positions of record in the defined competitive area.

(c) *Review of competitive area determinations.* The Secretary will make all competitive area definitions available for review.

(d) *Change of competitive area.* Competitive areas will be established for a minimum of 90 days before the effective date of a reduction in force. In implementing issuances, the Secretary will establish approval procedure requirements for any competitive area identified less than 90 days before the effective date of a reduction in force.

(e) *Limitations.* The Secretary will establish a competitive area only on the basis of legitimate organizational reasons, and competitive areas will not be used for the purpose of targeting an individual employee for reduction in forces on the basis of nonmerit factors.

(f) *Bar on collective bargaining.* Pursuant to 5 U.S.C. 9902(f)(4) and (m)(7), the establishment of a competitive area under the authority of this subpart is not subject to collective bargaining.

§ 9901.606 Competitive group.

(a) The Secretary will establish separate competitive groups for employees—

(1) In the excepted and competitive service;

(2) Under different excepted service appointment authorities; and

(3) With different work schedules (*e.g.,* full-time, part-time, seasonal, intermittent).

(b) The Secretary may further define competitive groups on the basis of one or more of the following considerations:

(1) Career group;

(2) Pay schedule;

(3) Occupational series or specialty;

(4) Pay band; or

(5) Trainee status.

(c) An employee is placed into a competitive group based on the employee's official position of record. An employee's official position description may be supplemented with other applicable records that document the employee's actual duties and responsibilities.

(d) The competitive group includes the official positions of employees on a detail or other nonpermanent assignment to a different position from the competitive group.

(e) Pursuant to 5 U.S.C. 9902(f)(4) and (m)(7), the establishment of a competitive group under the authority of this subpart is not subject to collective bargaining.

§ 9901.607 Retention standing.

(a) *Retention list.* Within each competitive group, the Secretary will establish a retention list of competing employees in descending order based on the following:

(1) Tenure, with career employees listed first, followed by employees serving an initial probationary period, and then followed by employees on term appointments and other employees as identified in implementing issuances;

(2) Veterans' preference, in accordance with the preference requirements in 5 CFR 351.501(c) and (d), including the preference restrictions found in 5 U.S.C. 3501(a);

(3) The ratings of record, as determined in accordance with implementing issuances;

(4) Creditable civilian and/or uniformed service in accordance with 5 U.S.C. 3502(a)(A) and (B) and 5 CFR 351.503, but without regard to provisions covering additional service credit for performance in 5 CFR 351.503(c)(3) and (e); and

(5) The Secretary may establish tie-breaking procedures when two or more employees have the same retention standing.

(b) *Active uniformed service member not on list.* The retention list does not include the name of an employee who, on the effective date of the reduction in force, is on active duty in the uniformed services with a restoration right under 5 CFR part 353.

(c) *Access to retention list.* An employee who received a specific reduction in force notice and the employee's representative have access to the applicable retention list in accordance with 5 CFR 351.505. Where 5 CFR 351.505 uses the terms ''competitive level'' or ''retention register,'' the term *retention list* (as defined in this subpart) is substituted.

§ 9901.608 Displacement, release, and position offers.

(a) *Displacement to other positions on the retention list.* (1) An employee who is displaced because of position abolishment, or because of displacement resulting from the abolishment of the position of a higher-standing employee on the retention list, may displace a lower-standing employee on the list if—

(i) The higher-standing employee is qualified for the position consistent, as applicable, with 5 CFR 351.702, or the Department's own qualifications applied consistent with other requirements in 5 CFR 351.702;

(ii) No undue interruption would result from the displacement; and

(iii) The position of the lower-standing employee is in the same pay band, or in a lower pay band, as the position of the higher-standing employee.

(2) A displacing employee retains his or her status and tenure.

(b) *Release from the retention list.* (1) Employees are selected for release from the list on the basis of the ascending order of retention standing set forth in § 9901.607(a).

(2) A competing employee may not be released from a retention list that contains a position held by a temporary employee when the competing employee is qualified to perform in that position under § 9901.608(a)(1)(i).

(3) The release of an employee from the retention list may be temporarily postponed when appropriate under 5 CFR 351.506, 351.606, 351.607, and 351.608. Where part 351 uses the term ''competitive level'' in these four sections, the term *retention list* (as defined in this subpart) is substituted.

(c) *Placement in vacant positions.* At the Secretary's option, an employee affected by § 9901.608(a)(1) may be offered a vacant position within the competitive area in lieu of reduction in force, based on relative retention standing as specified in § 9901.607(a).

(d) *Actions for employees with no offer.* If a released employee does not receive an offer of another position under paragraph (c) of this section to a position on a different retention list, the Secretary may—

(1) Separate the employee by reduction in force; or

(2) Furlough the employee under § 9901.604(b)(3).

§ 9901.609 Reduction in force notices.

The Secretary will provide a specific written notice to each employee reached for an action in reduction in force competition at least 60 days before the reduction in force becomes effective. When a reduction in force is caused by circumstances not reasonably foreseeable, the Secretary, at the request of a Component head or designee, may approve a notice period of less than 60 days. The shortened notice period must cover at least 30 full days before the effective date of release. The content of the notice will be prescribed in implementing issuances.

§ 9901.610 Voluntary separation.

(a) The Secretary may—

(1) Separate from the service any employee who volunteers to be separated even though the employee is not otherwise subject to separation due to a reduction in force; and

(2) For each employee voluntarily separated under paragraph (a)(1) of this section, retain an employee in a similar position who would otherwise be separated due to a reduction in force.

(b) The separation of an employee under paragraph (a) of this section will be treated as an involuntary separation due to a reduction in force.

§ 9901.611 Reduction in force appeals.

(a) An employee who believes the provisions of this subpart were not properly applied may appeal the reduction in force action to the Merit Systems Protection Board as provided for in 5 CFR 351.901 if the employee was—

(1) Separated by reduction in force;

(2) Reduced in band by reduction in force; or

(3) Furloughed by reduction in force under § 9901.604(b)(3).

(b) Paragraph (a) of this section does not apply to actions taken under internal DoD placement programs, including the DoD Priority Placement Program.

Subpart G—Adverse Actions

General

§ 9901.701 Purpose.

This subpart contains regulations prescribing the requirements for employees who are removed, suspended, furloughed for 30 days or less, reduced in pay, or reduced in pay band (or comparable reduction). The Secretary may prescribe implementing issuances to carry out the provisions of this subpart.

§ 9901.702 Waivers.

With respect to any category of employees covered by this subpart, subchapters I and II of 5 U.S.C. chapter 75, in addition to those provisions of 5 U.S.C. chapter 43 specified in subpart D of this part, are waived and replaced by this subpart.

§ 9901.703 Definitions.

In this subpart:

Adverse action means a removal, suspension, furlough for 30 days or less, reduction in pay, or reduction in pay band (or comparable reduction).

Band has the meaning given that term in § 9901.103.

Day has the meaning given that term in § 9901.103.

Furlough has the meaning given that term in § 9901.103.

Indefinite suspension means the placement of an employee in a temporary status without duties and pay pending investigation, inquiry, or other administrative action. An indefinite suspension continues for an indeterminate period of time and ends with the occurrence of pending conditions set forth in the notice of actions which may include the completion of any subsequent administrative action.

Initial probationary period has the meaning given that term in § 9901.103.

In-service probationary period has the meaning given that term in § 9901.103.

Mandatory removal offense (MRO) has the meaning given that term in § 9901.103.

Reduction in pay means a decrease in an employee's rate of basic pay fixed by

law or administrative action for the position held by the employee before any deductions and exclusive of additional pay of any kind. Basic pay does not include local market supplements under subpart C of this part or similar payments. Nonreceipt of a pay increase is not a reduction in pay.

Removal means the involuntary separation of an employee from the Federal service.

Suspension means the temporary placement of an employee, for disciplinary reasons, in a nonduty/nonpay status.

§ 9901.704 Coverage.

(a) *Actions covered.* This subpart covers removals, suspensions, furloughs of 30 days or less, reductions in pay, or reductions in band (or comparable reductions).

(b) *Actions excluded.* This subpart does not cover—

(1) An action taken against an employee during an initial probationary period established under § 9901.512(a), except when the employee is a preference eligible who has completed 1 year of that probationary period;

(2) A reduction in pay or pay band of an employee who does not satisfactorily complete an in-service probationary period under § 9901.512(b) if the employee is returned to a grade or band and rate of basic pay no lower than that held before the in-service probationary period.

(3) An action that terminates a temporary or term promotion and returns the employee to the position from which temporarily promoted, or to a different position in a comparable pay band, if the employee was informed that the promotion was to be of limited duration;

(4) A reduction in force action under subpart F of this part;

(5) An action imposed by the Merit Systems Protection Board under 5 U.S.C. 1215;

(6) A voluntary action by an employee;

(7) An action taken or directed by OPM based on suitability under 5 CFR part 731;

(8)(i) Termination of appointment on the expiration date specified as a basic condition of employment at the time the appointment was made;

(ii) Termination of appointment before the expiration date specified as a basic condition of employment at the time the appointment was made, except when the termination is taken against—

(A) A preference eligible employee who has completed 1 year under a time-limited appointment; or

(B) An employee who has completed a probationary period under a term appointment;

(9) Cancellation of a promotion to a position not classified prior to the promotion;

(10) Placement of an employee serving on an intermittent or seasonal basis in a temporary non-duty, non-pay status in accordance with conditions established at the time of appointment;

(11) Reduction of an employee's rate of basic pay from a rate that is contrary to law or regulation;

(12) An action taken under a provision of statute, other than one codified in title 5, U.S. Code, which excludes the action from 5 U.S.C. chapter 75 or this subpart;

(13) A classification determination, including a classification determination under subpart B of this part;

(14) Suspension or removal under 5 U.S.C. 7532; and

(15) An action to terminate grade retention upon conversion to the NSPS pay system established under subpart C of this part.

(c) *Employees covered.* Subject to a determination by the Secretary under § 9901.102(b)(2), this subpart applies to DoD employees, except as excluded by paragraph (d) of this section.

(d) *Employees excluded.* This subpart does not apply to—

(1) An employee who is serving a probationary period, except when the employee is a preference eligible who has completed 1 year of that probationary period;

(2) A member of the Senior Executive Service;

(3) An employee who is terminated in accordance with terms specified as conditions of employment at the time the appointment was made;

(4) An employee whose appointment is made by and with the advice and consent of the Senate;

(5) An employee whose position has been determined to be of a confidential, policy-determining, policy-making, or policy-advocating character by—

(i) The President, for a position that the President has excepted from the competitive service;

(ii) OPM, for a position that OPM has excepted from the competitive service; or

(iii) The President or the Secretary for a position excepted from the competitive service by statute;

(6) An employee whose appointment is made by the President;

(7) A reemployed annuitant who is receiving an annuity from the Civil Service Retirement and Disability Fund or the Foreign Service Retirement and Disability Fund;

(8) An employee who is an alien or non-citizen occupying a position outside the United States, as described in 5 U.S.C. 5102(c)(11);

(9) A member of the National Security Labor Relations Board;

(10) A non-appropriated fund employee;

(11) A National Guard technician who is employed under 32 U.S.C. 709; and

(12) An employee against whom an adverse personnel action is taken or imposed under any statute or regulation other than this subpart.

Requirements for Removal, Suspension, Furlough of 30 Days or Less, Reduction in Pay, or Reduction in Band (or Comparable Reduction)

§ 9901.711 Standard for action.

The Secretary may take an adverse action under this subpart only for such cause as will promote the efficiency of the service.

§ 9901.712 Mandatory removal offenses.

(a) The Secretary has the sole, exclusive, and unreviewable discretion to identify offenses that have a direct and substantial adverse impact on the Department's national security mission. Such offenses will be identified in advance in implementing issuances, publicized upon establishment via notice in the **Federal Register,** and made known to all employees on a periodic basis, as appropriate, through means determined by the Secretary.

(b) The procedures in §§ 9901.713 through 9901.716 apply to actions taken under this section. However, a proposed notice required by § 9901.714 may be issued to the employee in question only after the Secretary's review and approval.

(c) The Secretary has the sole, exclusive, and unreviewable discretion to mitigate the removal penalty on his or her own initiative or at the request of the employee in question.

(d) Nothing in this section limits the discretion of the Secretary to remove employees for offenses other than those identified by the Secretary as an MRO.

§ 9901.713 Procedures.

An employee against whom an adverse action is proposed is entitled to the following:

(a) A proposal notice under § 9901.714;

(b) An opportunity to reply under § 9901.715; and

(c) A decision notice under § 9901.716.

§ 9901.714 Proposal notice.

(a) *Notice period.* An employee will receive a minimum of 15 days advance

written notice of a proposed adverse action. However, if there is reasonable cause to believe the employee has committed a crime for which a sentence of imprisonment may be imposed, the notice period may be shortened to a minimum of 5 days. No notice of proposed action is necessary for furlough without pay due to unforeseen circumstances, such as sudden breakdown in equipment, acts of God, or sudden emergencies requiring immediate curtailment of activities.

(b) *Contents of notice.* (1) The proposal notice will inform the employee of the factual basis for the proposed action in sufficient detail to permit the employee to reply to the notice, and inform the employee of his or her right to review the evidence supporting the proposed action. Evidence may not be used that cannot be disclosed to the employee, his or her representative, or designated physician pursuant to 5 CFR 297.204.

(2) When some but not all employees in a given category and/or organizational unit are being furloughed, the proposal notice will state the basis for selecting a particular employee for furlough, as well as the reasons for the furlough.

(c) *Duty status during notice period.* An employee will remain in a duty status in his or her regular position during the notice period. However, if it is determined that the employee's continued presence in the workplace during the notice period may pose a threat to the employee or others, result in loss of or damage to Government property, adversely impact the Department's mission, or otherwise jeopardize legitimate Government interests, one or a combination of the following alternatives may be taken:

(1) Assign the employee to duties where it is determined that the employee is no longer a threat to the employee or others, the Department's mission, or Government property or interests;

(2) Allow the employee to take leave, or place him or her in an appropriate leave status (annual leave, sick leave, or leave without pay) or absence without leave if the employee has absented himself or herself from the worksite without approved leave; or

(3) Place the employee in a paid, non-duty status for such time as is necessary to effect the action.

§ 9901.715 Opportunity to reply.

(a) An employee will be provided a minimum of 10 days, which will run concurrently with the notice period, to reply orally and/or in writing to a notice of proposed adverse action. However, if there is reasonable cause to believe the employee has committed a crime for which a sentence of imprisonment may be imposed, the reply period may be reduced to a minimum 5 days, which will run concurrently with the notice period. No opportunity to reply is necessary for furlough without pay due to unforeseen circumstances, such as sudden breakdown in equipment, acts of God, or sudden emergencies requiring immediate curtailment of activities.

(b) The opportunity to reply orally does not include the right to a formal hearing with examination of witnesses.

(c) During the opportunity to reply period, the employee will be provided a reasonable amount of official time to review the evidence, and to furnish affidavits and other documentary evidence, if the employee is otherwise in an active duty status.

(d) An official will be designated to receive the employee's written and/or oral response. The official will have authority to make or recommend a final decision on the proposed adverse action.

(e) The employee may be represented by an attorney or non-Federal employee representative, at the employee's expense, or other representative of the employee's choice, subject to paragraph (f) of this section. The employee will provide a written designation of his or her representative.

(f) An employee's representative may be disallowed if the representative is—

(1) An individual whose activities as representative would cause a conflict between the interest or position of the representative and that of the Department,

(2) An employee of the Department whose release from his or her official position would give rise to unreasonable costs or whose work assignments preclude his or her release; or

(3) An individual whose activities as representative could compromise security.

(g)(1) An employee who wishes consideration of any medical condition that may be relevant to the proposed adverse action will provide medical documentation, as that term is defined at 5 CFR 339.104, during the opportunity to reply, whenever possible.

(2) A medical examination may be required or offered pursuant to 5 CFR part 339, subpart C, when an employee's medical documentation is under consideration.

(3) Withdrawal or delay of a proposed adverse action is not required when an employee's medical condition is under consideration . However—

(i) The employee will be allowed to provide medical documentation during the opportunity to reply;

(ii) Compliance with 29 CFR 1614.203 and relevant Equal Employment Opportunity Commission rules will occur; and

(iii) Compliance with 5 CFR 831.1205 or 844.202, as applicable, will occur in the issuance of a decision to remove.

§ 9901.716 Decision notice.

(a) Any reasons for the action other than those specified in the proposal notice may not be considered in a decision on a proposed adverse action.

(b) Any response from the employee and the employee's representative, if the response is provided to the official designated under § 9901.715(d) during the opportunity to reply period, and any medical documentation furnished under § 9901.715(g) will be considered.

(c) The decision notice will specify in writing the reasons for the decision and advise the employee of any appeal or grievance rights under subparts H or I of this part.

(d) To the extent practicable, the notice to the employee will be delivered on or before the effective date of the action. If delivery cannot be made to the employee in person, the notice may be delivered to the employee's last known address of record on or before the effective date of the action.

§ 9901.717 Departmental record.

(a) *Document retention.* The Department will keep a record of all relevant documentation concerning the action for a period of time pursuant to the General Records Schedule and the Guide to Personnel Recordkeeping. The record will include the following:

(1) A copy of the proposal notice;

(2) The employee's written response, if any, to the proposal;

(3) A summary of the employee's oral response, if any;

(4) A copy of the decision notice; and

(5) Any supporting material that is directly relevant and on which the action was substantially based.

(b) *Access to the record.* The Department will make the record available for review by the employee and furnish a copy of the record upon the employee's request or the request of the Merit Systems Protection Board (MSPB), but not less than 15 days after such a request.

Savings Provision

§ 9901.721 Savings provision.

This subpart does not apply to adverse actions proposed prior to the date of an affected employee's coverage under this subpart.

Subpart H—Appeals

§ 9901.801 Purpose.

This subpart implements the provisions of 5 U.S.C. 9902(h), which establishes the process for Department employees to appeal certain adverse actions covered under subpart G of this part.

§ 9901.802 Applicable legal standards and precedents.

In accordance with 5 U.S.C. 9902(h)(3), in applying existing legal standards and precedents, MSPB and arbitrators, in applicable cases, are bound by the legal standard set forth in § 9901.107(a)(2).

§ 9901.803 Waivers.

When a specified category of employees is covered by an appeals process established under this subpart, the provisions of 5 U.S.C. 7701 are waived with respect to that category of employees to the extent they are inconsistent with the provisions of this subpart. The provisions of 5 U.S.C. 7702 are modified as provided in § 9901.809. The appellate procedures specified herein supersede those of MSPB to the extent MSPB regulations are inconsistent with this subpart. MSPB will follow the provisions in this subpart until it issues conforming regulations, which may not conflict with this part.

§ 9901.804 Definitions.

In this subpart:

Administrative judge or *AJ* means the official, including an administrative law judge, authorized by MSPB to hold a hearing in a matter covered by this subpart and subpart G of this part, or to decide such a matter without a hearing.

Class appeal means an appeal brought by a representative(s) of a group of similarly situated employees consistent with the provisions of Rule 23 of the *Federal Rules of Civil Procedure.*

Harmful error means error by the Department in the application of its procedures that is likely to have caused it to reach a conclusion different from the one it would have reached in the absence or cure of the error. The burden is on the appellant to show that the error was harmful, *i.e.*, that it caused substantial harm or prejudice to his or her rights.

Mandatory removal offense (MRO) has the meaning given that term in § 9901.103.

MSPB means the Merit Systems Protection Board.

Petition for Review (PFR) means a request for full MSPB review of a final Department decision.

Preponderance of the evidence means the degree of relevant evidence that a reasonable person, considering the record as a whole, would accept as sufficient to find that a contested fact is more likely to be true than untrue.

Request for Review (RFR) means a preliminary request for review of an initial decision of an MSPB administrative judge before that decision has become a final Department decision.

§ 9901.805 Coverage.

(a) Subject to a determination by the Secretary under § 9901.102(b)(2), this subpart applies to employees in DoD organizational and functional units that are included under NSPS who appeal removals; suspensions for more than 14 days, including indefinite suspensions; furloughs of 30 days or less; reductions in pay; or reductions in pay band (or comparable reductions), which constitute appealable adverse actions for the purpose of this subpart, provided such employees are covered by § 9901.704.

(b) This subpart does not apply to a reduction in force action taken under subpart F of this part, nor does it apply to actions taken under internal DoD placement programs, including the DoD Priority Placement Program.

(c) Appeals of suspensions of 14 days or less and other lesser disciplinary measures are not covered under this subpart but may be grieved through a negotiated grievance procedure or an administrative grievance procedure, whichever is applicable.

(d) The appeal rights in 5 CFR 315.806 apply to the termination of an employee in the competitive service while serving a probationary period.

(e) Actions taken under 5 U.S.C. 7532 are not appealable to MSPB.

(f) Except as expressly provided in subpart C of this part, actions taken under that subpart are not appealable to MSPB.

§ 9901.806 Alternative dispute resolution.

The Secretary recognizes the value of using alternative dispute resolution methods such as mediation, an ombudsman, or interest-based problem-solving to address employee-employer disputes arising in the workplace, including those which may involve disciplinary or adverse actions. Such methods can result in more efficient and more effective outcomes than traditional, adversarial methods of dispute resolution. The use of alternative dispute resolution is encouraged. Such methods will be subject to collective bargaining to the extent permitted by subpart I of this part.

§ 9901.807 Appellate procedures.

(a) *General.* (1) A covered Department employee may appeal to MSPB an adverse action listed in § 9901.805(a). Such an employee has a right to be represented by an attorney or other representative of his or her own choosing. The procedures in this subpart do not apply when the action is taken under the special national security provisions established by 5 U.S.C. 7532.

(2)(i) This section modifies MSPB's appellate procedures with respect to appeals under this subpart, as applicable.

(ii) MSPB will refer appeals to an AJ for adjudication. The AJ must make a decision at the close of the review and provide a copy of the decision to each party to the appeal and to OPM.

(3) The Director of OPM may, as a matter of right at any time in the proceeding, intervene or otherwise participate in any proceeding under this section in any case in which the Director believes that an erroneous decision will have a substantial impact on a civil service law, rule, regulation, or policy directive.

(4) If the AJ is of the opinion that an appeal could be processed more expeditiously without adversely affecting any party, the AJ may—

(i) Consolidate appeals filed by two or more appellants; or

(ii) Join two or more appeals filed by the same appellant and hear and decide them concurrently.

(5) If an employee has been removed under subpart G of this part, neither the employee's status under any retirement system established by Federal statute nor any election made by the employee under any such system will affect the employee's appeal rights.

(6) All appeals, including class appeals, will be filed no later than 20 days after the effective date of the action being appealed, or no later than 20 days after the date of service of a decision under subpart G of this part, whichever is later.

(7) Either party may file a motion to disqualify a party's representative at any time during the proceedings.

(b) *Case suspension.* Requests for case suspensions must be submitted jointly by the parties.

(c) *Settlement.* (1) An MSPB AJ may not require any party to engage in settlement discussions in connection with any action appealed under this section. Where the parties voluntarily agree to enter into settlement discussions under paragraph (c)(2) of

this section, if either party decides that such discussions are not appropriate, the matter will proceed to adjudication.

(2) Where the parties agree to engage in formal settlement discussions, these discussions will be conducted by an official other than the AJ assigned to adjudicate the case. Nothing prohibits the parties from engaging in settlement discussions on their own.

(d) *Discovery.* The parties may seek discovery regarding any matter that is relevant to any of their claims or defenses. However, by motion, either party may seek to limit such discovery because the burden or expense of providing the material outweighs its benefit, or because the material sought is privileged, not relevant, unreasonably cumulative or duplicative, or can be secured from some other source that is more convenient, less burdensome, or less expensive.

(1) Prior to filing a motion to limit discovery, the parties must confer and attempt to resolve any pending objection(s).

(2) Neither party may submit more than one set of interrogatories, one set of requests for production, and one set of requests for admissions. The number of interrogatories or requests for production or admissions may not exceed 25 per pleading, including subparts; in addition, neither party may conduct/compel more than 2 depositions.

(3) The AJ may grant a party's motion for additional discovery only upon a showing of necessity and good cause.

(e) *Hearing.* (1) *Burden of proof.* An adverse action taken against an employee will be sustained by the MSPB AJ if it is supported by a preponderance of the evidence, unless the employee shows by a preponderance of the evidence—

(i) That there was harmful error in the application of Department procedures in arriving at the decision;

(ii) That the decision was based on any prohibited personnel practice described in 5 U.S.C. 2302(b); or

(iii) That the decision was not in accordance with law.

(2) *Decisions without a hearing.* If the AJ determines upon his or her own initiative or upon request by either party that some or all material facts are not in genuine dispute, he or she may, after giving notice to the parties and providing them an opportunity to respond in writing, including filing evidence and/or arguments, within 15 calendar days, issue an order limiting the scope of the hearing or issue a decision without holding a hearing.

(f) *Initial decision.* (1) *Time limit.* An initial decision must be made by an AJ no later than 90 days after the date on which the appeal is filed.

(2) *Mitigation.* (i) An AJ will give great deference to the determination regarding the penalty imposed.

(ii) An AJ may not modify the penalty imposed unless such penalty is totally unwarranted in light of all pertinent circumstances. In evaluating the appropriateness of the penalty, the AJ will give primary consideration to the impact of the sustained misconduct or poor performance on the Department's national security mission in accordance with § 9901.107(a)(2).

(iii) In cases of multiple charges, the third party's determination in this regard is based on the justification for the penalty as it relates to the sustained charge(s).

(iv) When a penalty is mitigated, the maximum justifiable penalty must be applied. The maximum justifiable penalty is the severest penalty that is not so disproportionate to the basis for the action as to be totally unwarranted in light of all pertinent circumstances.

(v) If the adverse action is based on an MRO, the penalty may only be mitigated as prescribed in § 9901.808.

(3) *Reviewing charges.* Neither the MSPB AJ, nor the full MSPB, may reverse an action based on the way in which the charge is labeled or the conduct characterized, provided the employee has sufficient notice to respond to the charge.

(4) *Performance expectations.* Neither the MSPB AJ, nor the full MSPB, may reverse an action based on the way a performance expectation is expressed, provided that the expectation would be clear to a reasonable person.

(5) *Interim relief.* Pursuant to 5 U.S.C. 9902(h)(4), employees will not be granted interim relief, nor will an action taken against an employee be stayed, unless specifically ordered by the full MSPB following final decision by the Department.

(i) If the interim relief ordered by the full MSPB provides that the employee will return or be present at the place of employment pending the outcome of any petition for review, and the Secretary determines, in his or her sole, exclusive, and unreviewable discretion, that the employee's return to the workplace is impracticable or the presence of the employee is unduly disruptive to the work environment, the employee may be placed in an alternative position, or may be placed on excused absence pending final disposition of the employee's appeal.

(ii) Nothing in paragraph (f)(5) of this section may be construed to require that any award of back pay or attorney fees be paid before an MSPB decision becomes final.

(6) *Attorney fees.* (i) Except as provided in paragraph (f)(6)(ii) of this section or as otherwise provided by law, the AJ may require payment by the Department of reasonable attorney fees incurred by an employee if the employee is the prevailing party and the AJ determines that payment by the Department is warranted in the interest of justice, including any case in which a prohibited personnel practice was engaged in by the agency or any case in which the agency's action was clearly without merit.

(ii) If the employee is the prevailing party and the decision is based on a finding of discrimination prohibited under 5 U.S.C. 2302(b)(1), the payment of reasonable attorney fees must be in accordance with the standards prescribed in § 706(k) of the Civil Rights Act of 1964 (42 U.S.C. 2000e–5(k)).

(g) *Department's final decision.* (1) *Request for Review.* The initial AJ decision will become the Department's final decision 30 days after its issuance, unless either party files an RFR with MSPB and the Department concurrently (with service on the other party) within that 30-day period in accordance with 5 U.S.C. 9902(h), MSPB's regulations, and this subpart. If a party does not submit an RFR within the above time limit, the RFR will be dismissed as untimely filed unless a good reason for the delay is shown.

(2) *Department review process.* (i) Thirty days after the timely filing of an RFR, the initial AJ decision will become the Department's final, nonprecedential decision, unless notice is served on the parties and MSPB within that 30-day period that the Department will act on the RFR. When no such notice is served, MSPB will docket and process a party's RFR as a petition for full MSPB review in accordance with 5 U.S.C. 9902(h), MSPB's regulations, and this subpart. Timeframes will be established in implementing issuances for those instances where action is taken on an RFR.

(ii) If a decision is made to act on the RFR, the other party to the case will be provided 15 days to respond to the RFR. An extension to the filing period may be granted for good cause. After receipt of a timely response to the RFR—

(A) If a determination is made that there has been a material error of fact, or that there is new and material evidence available that, despite due diligence, was not available when the record closed, the matter will be remanded to the assigned AJ for further adjudication or a final DoD decision will be issued modifying or reversing

that initial decision or decision after remand. Any remand will be served on all parties with an opportunity for those parties to comment to the AJ. An AJ decision after remand must be made no later than 30 days after the date of receipt of the remand. However, if the Department's remand order includes instructions to hold a hearing, the AJ decision will be made not later than 45 days after receipt of the remand order. Decisions on remand will be treated as initial decisions for purpose of further review.

(B) Where it is determined that the initial AJ decision has a direct and substantial adverse impact on the Department's national security mission, or is based on an erroneous interpretation of law, Governmentwide rule or regulation, or this part, a final DoD decision will be issued modifying or reversing that initial decision; or

(C) Where it is determined that the initial AJ decision should serve as precedent, a final DoD decision will be issued affirming that initial decision for such purposes.

(3) *Precedential effect.* Any decision issued by the Department after reviewing an initial AJ decision is precedential unless—

(i) The Secretary determines that the DoD decision is not precedential; or

(ii) The final DoD decision is reversed or modified by the full MSPB.

(4) *Publication of decisions.* Precedential DoD decisions will be published. Further details regarding the publication of DoD precedential decisions will be provided in implementing issuances.

(h) *Appeal of Department's final decision.* (1) *OPM Petition for Review.* Any decision under paragraph (a)(2) of this section is final unless a party to the appeal or the Director of OPM petitions the full MSPB for review within 30 days. The Director, after consultation with the Secretary, may petition the full MSPB for review if the Director believes the decision is erroneous and will have a substantial impact on a civil service law, rule, regulation, or policy directive. MSPB, for good cause shown, may extend the filing period.

(2) *Petition for Review.* (i) Upon receipt of a final DoD decision issued under paragraph (g)(2)(ii) of this section, an employee or OPM may file a PFR with the full MSPB within 30 days in accordance with 5 U.S.C. 9902(h), MSPB's regulations, and this subpart.

(ii) The Board may dismiss any petition that, in the view of the Board, does not raise substantial questions of fact or law.

(iii) The full MSPB may order corrective action only if the Board determines that the decision was—

(A) Arbitrary, capricious, and abuse of discretion, or otherwise not in accordance with law;

(B) Obtained without procedures required by law, rule, or regulation having been followed; or

(C) Unsupported by substantial evidence.

(iv) Upon receipt of a petition for full MSPB review or an RFR that becomes a PFR as a result of the expiration of the Department's review period in accordance with paragraph (g)(2)(i) of this section, the other party to the case and/or OPM, as applicable, will have 30 days to file a response to the petition. The full MSPB will act on a PFR within 90 days after receipt of a timely response, or the expiration of the response period, as applicable, in accordance with 5 U.S.C. 9902(h), MSPB's regulations, and this subpart.

(3) *Request for reconsideration of final MSPB decision.* The Director of OPM, after consultation with the Secretary, may seek reconsideration by MSPB of a final MSPB decision in accordance with 5 U.S.C. 7703(d), which is modified for this purpose. The Director of OPM must seek reconsideration within 35 days after the date of service of the Board's final order. If the Director seeks such reconsideration, the full MSPB must render its decision no later than 60 days after receipt of a response to OPM's petition in support of such reconsideration. The full MSPB must state the reasons for its decision.

(4) *Failure of MSPB to meet deadlines.* Failure of MSPB to meet the deadlines imposed by paragraphs (f)(1), (h)(2)(iv), and (h)(3) of this section in a case will not prejudice any party to the case and will not form the basis for any legal action by any party. If the AJ or full MSPB fails to meet the above time limits, the full MSPB will inform the Secretary in writing of the cause of the delay and will recommend future actions to remedy the problem.

(i) *Judicial review.* The Secretary or an employee adversely affected by a final order or decision of MSPB may seek judicial review under 5 U.S.C. 9902(h)(6).

§ 9901.808 Appeals of mandatory removal actions.

(a) Procedures for appeals of adverse actions to MSPB based on MROs will be the same as for other offenses except as otherwise provided by this section.

(b) If one or more MROs are sustained, the MSPB AJ may not mitigate the penalty.

(c) Only the Secretary may mitigate the penalty within the Department.

(d) If the MSPB AJ or the full MSPB sustains an employee's appeal based on a finding that the employee did not commit an MRO, a subsequent proposed adverse action (other than an MRO) based in whole or in part on the same or similar evidence is not precluded.

§ 9901.809 Actions involving discrimination.

(a) In considering any appeal of an action filed under 5 U.S.C. 7702, the Board will apply the provisions of 5 U.S.C. 9902 and this part.

(b) In any appeal of an action filed under 5 U.S.C. 7702 that results in a final Department decision, if no petition for review of the Department's decision is filed with the full Board, and if requested by the appellant, the Department will refer only the discrimination issue to the full Board for adjudication.

(c) All references in 5 U.S.C. 7702 to 5 U.S.C. 7701 are modified to read 5 CFR part 9901, subpart H.

§ 9901.810 Savings provision.

This subpart does not apply to adverse actions proposed prior to the date of an affected employee's coverage under this subpart.

Subpart I—Labor-Management Relations

§ 9901.901 Purpose.

This subpart contains the regulations which implement the provisions of 5 U.S.C. 9902(m) relating to the Department's labor-management relations system. This labor management relations system addresses the unique role that the Department's civilian workforce plays in supporting the Department's national security mission and promotes a collaborative issue-based approach to labor management relations. These regulations recognize the rights of DoD employees to organize and bargain collectively, as provided for in 5 U.S.C. 9902 and this part and subject to any exclusion from coverage or limitation on the scope of bargaining pursuant to law, including this part, issuances, and implementing issuances, applicable Presidential issuances (*e.g.,* Executive orders), and any other applicable legal authority.

§ 9901.902 Scope of authority.

When a specified category of employees is covered by the labor-management relations system established under this subpart, the provisions of 5 U.S.C. 7101 through 7135 are modified and replaced by the

provisions in this subpart with respect to that category, except as otherwise specified in this subpart. Implementing issuances may be prescribed to carry out the provisions of this subpart.

§ 9901.903 Definitions.

In this subpart:

Authority means the Federal Labor Relations Authority described in 5 U.S.C. 7104(a).

Board means the National Security Labor Relations Board established by this subpart.

Collective bargaining means the performance of the mutual obligation of a management representative of the Department and an exclusive representative of employees in an appropriate unit in the Department to meet at reasonable times and to bargain in a good faith effort to reach agreement, pursuant to 5 U.S.C. 9902 and this subpart, with respect to the conditions of employment affecting such employees and to execute, if requested by either party, a written document incorporating any collective bargaining agreement reached, but the obligation referred to in this paragraph does not compel either party to agree to a proposal or to make a concession.

Collective bargaining agreement means an agreement entered into as a result of collective bargaining pursuant to the provisions of 5 U.S.C. 9902 and this subpart.

Component means an organizational unit so prescribed and designated by the Secretary in his or her sole and exclusive discretion, such as, for example, the Office of the Secretary of Defense, a Military Department, a Defense Agency, or a DoD Field Activity.

Conditions of employment means personnel policies, practices, and matters affecting working conditions—whether established by rule, regulation, or otherwise—except that such term does not include policies, practices, and matters relating to—

(1) Political activities prohibited under 5 U.S.C. chapter 73, subchapter III;

(2) The classification of any position, including any classification determinations under subpart B of this part;

(3) The pay of any employee or for any position, including any determinations regarding pay or adjustments thereto under subpart C of this part; or

(4) Any matters specifically provided for by Federal statute.

Confidential employee means an employee who acts in a confidential capacity with respect to an individual who formulates or effectuates management policies in the field of labor-management relations.

Consult means to consider the interests, opinions, and recommendations of a recognized labor organization in rendering decisions. This can be accomplished in face-to-face meetings or through other means, *e.g.,* teleconferencing, e-mail, and written communications.

Dues means dues, fees, and assessments.

Exclusive representative means any labor organization which is recognized as the exclusive representative of employees in an appropriate unit consistent with the Department's organizational structure, pursuant to 5 U.S.C. 7111 or as otherwise provided by § 9901.911.

FMCS means Federal Mediation and Conciliation Service.

Grade means a level of work under a position classification or job grading system.

Grievance means any complaint—

(1) By any employee concerning any matter relating to the conditions of employment of the employee;

(2) By any labor organization concerning any matter relating to the conditions of employment of any employee; or

(3) By any employee, labor organization, or the Department concerning—

(i) The effect or interpretation, or a claim of breach, of a collective bargaining agreement; or

(ii) Any claimed violation, misinterpretation, or misapplication of any law, rule, regulation, or issuance issued for the purpose of affecting conditions of employment.

Implementing issuance or issuances has the meaning given that term in § 9901.103.

Issuance or issuances means a document issued by the Secretary, Deputy Secretary, Principal Staff Assistants (as authorized by the Secretary), or Secretaries of the Military Departments to carry out a policy or procedure of the Department other than those issuances implementing this part.

Labor organization has the meaning given that term in § 9901.103.

Management official means an individual employed by the Department in a position the duties and responsibilities of which require or authorize the individual to formulate, determine, or influence the policies of the Department.

Person has the meaning given that term in 5 U.S.C. 7103(a)(1).

Professional employee has the meaning given that term in 5 U.S.C. 7103(a)(15).

Supervisor means an individual employed by the Department having authority in the interest of the Department to hire, direct, assign, promote, reward, transfer, furlough, layoff, recall, suspend, discipline, or remove employees; to adjust their grievances; or to effectively recommend such action, if the exercise of the authority is not merely routine or clerical in nature but requires the consistent exercise of independent judgment, except that, with respect to any unit which includes firefighters or nurses, the term ''supervisor'' includes only those individuals who devote a preponderance of their employment time to exercising such authority. It also means an individual employed by the Department who exercises supervisory authority over military members of the armed services, such as directing or assigning work or evaluating or recommending evaluations.

§ 9901.904 Coverage.

(a) *Employees covered.* This subpart applies to eligible DoD employees, subject to a determination by the Secretary under § 9901.102(b)(1), except as provided in paragraph (b) of this section. DoD employees who would otherwise be eligible for bargaining unit membership under 5 U.S.C. chapter 71, as modified by § 9901.912, are eligible for bargaining unit membership under this subpart. In addition, this subpart applies to an employee whose employment in the Department has ceased because of any unfair labor practice under § 9901.916 of this subpart and who has not obtained any other regular and substantially equivalent employment.

(b) *Employees excluded.* This subpart does not apply to—

(1) An alien or noncitizen of the United States who occupies a position outside the United States;

(2) A military member of the armed services;

(3) A supervisor or a management official;

(4) Any person who participates in a strike in violation of 5 U.S.C. 7311; or

(5) Any employee excluded pursuant to § 9901.912 or any other legal authority.

§ 9901.905 Impact on existing agreements.

(a) Any provision of a collective bargaining agreement that is inconsistent with this part and/or implementing issuances is unenforceable on the effective date of the applicable subpart(s) or such issuances. The exclusive representative may appeal a determination that a provision is unenforceable to the

National Security Labor Relations Board in accordance with the procedures and time limits pursuant to § 9901.908 and the Board's regulations. However, the Secretary, in his or her sole and exclusive discretion, may continue all or part of a particular provision(s) with respect to a specific category or categories of employees and may cancel such continuation at any time; such determinations are not precedential.

(b) Upon request by an exclusive representative, the parties will have 60 days after the effective date of coverage under the applicable subpart and/or implementing issuance to bring into conformance those remaining negotiable collective bargaining agreement provisions directly affected by the collective bargaining agreement provisions rendered unenforceable by the applicable subpart and/or implementing issuance. During that period, the parties may utilize the negotiation impasse provisions of § 9901.920 to assist in resolving any impasses.

(c) Any provision of a collective bargaining agreement that is inconsistent with an issuance remains in effect until the expiration, renewal, or extension of the term of the agreement, whichever occurs first.

§ 9901.906 Employee rights.

Each employee has the right to form, join, or assist any labor organization, or to refrain from any such activity, freely and without fear of penalty or reprisal, and each employee will be protected in the exercise of such right. Except as otherwise provided under this subpart, such right includes the right—

(a) To act for a labor organization in the capacity of a representative and the right, in that capacity, to present the views of the labor organization to heads of agencies and other officials of the executive branch of the Government, the Congress, or other appropriate authorities; and

(b) To engage in collective bargaining with respect to conditions of employment through representatives chosen by employees under this subpart.

§ 9901.907 National Security Labor Relations Board.

(a) The Secretary has sole, exclusive, and unreviewable authority to determine the effective date for the establishment of the National Security Labor Relations Board.

(b)(1) The National Security Labor Relations Board is composed of at least three members who are appointed by the Secretary for terms of 3 years, except that the appointments of the initial Board members will be for terms of 1, 2, and 3 years, respectively. The Secretary may extend the term of any member beyond 3 years when necessary to provide for an orderly transition and/or appoint the member for up to two additional 1-year terms. The Secretary, in his or her sole and exclusive discretion, may appoint additional members to the Board; in so doing, he or she will make such appointments to ensure that the Board consists of an odd number of members.

(2) Members of the Board will be independent, distinguished citizens of the United States who are well known for their integrity, impartiality, and expertise in labor relations, and/or the DoD mission and/or other related national security matters, and will be able to acquire and maintain an appropriate security clearance. Members may be removed by the Secretary only for inefficiency, neglect of duty, or malfeasance in office.

(3) An individual chosen to fill a vacancy on the Board will be appointed for the unexpired term of the member who is replaced and, at the Secretary's option, an additional term or terms.

(c) *Appointment of the Chair.* The Secretary, at his or her sole and exclusive discretion, will appoint one member to serve as Chair of the NSLRB.

(d) *Appointment procedures for non-Chair NSLRB members.* (1) The appointments of the two non-Chair NSLRB members will be made by the Secretary, at his or her sole and exclusive discretion, after he or she considers any lists of nominees submitted by labor organizations that represent employees in the Department.

(2) The submission of lists of recommended nominees by labor organizations must be in accordance with timelines and requirements set forth by the Secretary, who may provide for consultation in order to obtain further information about a recommended nominee. The ability of the Secretary to appoint NSLRB members may not be delayed or otherwise affected by the failure of any labor organization to provide a list of nominees that meets the timeframe and requires established by the Secretary.

(e) *Appointment of additional non-Chair NSLRB members.* If the Secretary determines that additional members are needed, he or she may, subject to the criteria set forth in paragraph (b)(2) of this section, appoint the additional members according to the procedures established by paragraph (d) of this section.

(f) A Board vacancy will be filled according to the procedure used to appoint the member whose position was vacated.

(g)(1) The Board will establish procedures for the fair, impartial, and expeditious assignment and disposition of cases, including standards for asserting or declining jurisdiction.

(2) To the extent practicable, the Board will use a single, integrated process to address all matters associated with a negotiations dispute, including unfair labor practices, negotiability disputes, and bargaining impasses. The Board may, pursuant to its regulations, use a combination of mediation, factfinding, and any other appropriate dispute resolution methods to resolve all such disputes at the earliest practicable time and with a minimum administrative burden.

(3) A vote of the majority of the Board (or a three-person panel of the Board) will be final. A vacancy on the Board does not impair the right of the remaining members to exercise all of the powers of the Board. The vote of the Chair will be dispositive in the event of a tie.

(h) Decisions of the Board are final and binding.

§ 9901.908 Powers and duties of the Board.

(a) Section 9902(m)(6) of title 5, U.S. Code, requires that the labor relations system established under this subpart provide for an independent third party review of labor relations issues set out in § 9901.908(b), including defining the third party to provide the review. Notwithstanding § 9901.907 and pending establishment of the Board, the Secretary, in consultation with the Director, may designate a third party to exercise the authority of the Board in accordance with this subpart.

(b) The Board may to the extent provided in this subpart and in accordance with regulations prescribed by the Board—

(1) Conduct investigations and hearings, and resolve allegations of unfair labor practices, including allegations concerning strikes, work stoppages, slowdowns, and picketing, or condoning such activity by failing to take action to prevent or stop such activity;

(2) Resolve issues relating to the scope of bargaining and the duty to bargain in good faith under § 9901.917;

(3) Resolve exceptions to arbitration awards. In doing so, the Board will conduct any review of an arbitral award in accordance with 5 U.S.C. 7122(a) as modified in § 9901.923;

(4) Resolve negotiation impasses in accordance with § 9901.920;

(5) Conduct *de novo* review involving all matters within the Board's jurisdiction; and

(6) Have discretion to evaluate the evidence presented in the record and reach its own independent conclusions with respect to the matters at issue, but in no case may the Board issue status quo ante remedies, where such remedies are not intended to cure egregious violations of this subpart or where such an award would impose an economic hardship or interfere with the efficiency or effectiveness of the Department's mission or impact national security.

(c) In any case in which the Board or its authorized agent, in the Board's or the agent's unreviewable discretion, declines to adjudicate any unfair labor practice allegation(s) because the allegation(s) was not timely filed, fails to state an unfair labor practice, or for other appropriate reasons, the Board or the agent, as applicable, will provide the person making the allegation(s) a written statement of the reasons for such determination.

(d) Upon the request of a DoD Component or a labor organization concerned, the Board may issue guidance for matters within its jurisdiction.

(e) The Board's decisions will be written and published.

§ 9901.909 Powers and duties of the Federal Labor Relations Authority.

(a) To the extent provided in this subpart (pursuant to the authority in 5 U.S.C. 9902), the Federal Labor Relations Authority, in accordance with conforming regulations prescribed by the Authority, may—

(1) Determine the appropriateness of bargaining units pursuant to the provisions of § 9901.912;

(2) Supervise or conduct elections to determine whether a labor organization has been selected as an exclusive representative by a majority of the employees in an appropriate unit and otherwise administer 5 U.S.C. 7111 (relating to the according of exclusive recognition to labor organizations), which is not waived for the purpose of this subpart;

(3) Resolve disputes regarding the granting of national consultation rights; and

(4) Upon request of a party, review only those Board decisions on—

(i) Unfair labor practices, except those issued under § 9901.908(c);

(ii) Arbitral awards under § 9901.908; and

(iii) Negotiability disputes.

(b) In any matter filed with the Authority, if the responding party believes that the Authority lacks jurisdiction, that party will timely raise the issue with the Authority and simultaneously file a copy of its response with the Board in accordance with regulations established by the Authority. The Authority will promptly transfer the case to the Board, which will determine whether the matter is within the Board's jurisdiction. If the Board determines that the matter is not within its jurisdiction, the Board will return the matter to the Authority for a decision on the merits of the case. The Board's determination with regard to its jurisdiction in a particular matter is final and not subject to review by the Authority. The Authority will promptly decide those cases that the Board has determined are within the jurisdiction of the Authority.

(c)(1) To obtain review by the Authority of a Board decision, a party will request a review of the record of a Board decision by the Authority by filing such a request in writing within 15 days after the issuance of the decision. A copy of the request will be served on all parties. Within 15 days after service of the request, any response will be filed. The Authority will establish, in conjunction with the Board, standards for the sufficiency of the record and other procedures, including notice to the parties. The Authority will accept the findings of fact and interpretations of this part made by the Board and sustain the Board's decision unless the requesting party shows that the Board's decision was—

(i) Arbitrary, capricious, an abuse of discretion, or otherwise not in accordance with law;

(ii) Caused by harmful error in the application of the Board's procedures in arriving at such decision; or

(iii) Unsupported by substantial evidence.

(2) The Authority will complete its review of the record and issue a final decision within 30 days after receiving the party's response to such request for review. If the Authority does not issue a final decision within this mandatory time limit, the Authority will be considered to have denied the request for review of the Board's decision, which will constitute a final decision of the Authority and is subject to judicial review in accordance with 5 U.S.C. 7123.

(d) Judicial review of any Authority decision is as prescribed in 5 U.S.C. 7123(a). The references in 5 U.S.C. 7123(a) to other provisions in 5 U.S.C. chapter 71 are considered to be references to those particular provisions as modified by this subpart.

§ 9901.910 Management rights.

(a) Subject to paragraphs (b) through (e) of this section, nothing in this subpart may affect the authority of any management official or supervisor of the Department—

(1) To determine the mission, budget, organization, number of employees, and internal security practices of the Department;

(2) To hire, assign, and direct employees in the Department; to assign work, make determinations with respect to contracting out, and to determine the personnel by which Departmental operations may be conducted; to determine the numbers, types, pay schedules, pay bands and/or grades of employees or positions assigned to any organizational subdivision, work project or tour of duty, and the technology, methods, and means of performing work; to assign employees to meet any operational demand; and to take whatever other actions may be necessary to carry out the Department's mission; and

(3) To lay off and retain employees, or to suspend; remove; reduce in pay, pay band, or grade; or take other disciplinary action against such employees or, with respect to filling positions, to make selections for appointments from properly ranked and certified candidates for promotion or from any other appropriate source.

(b) Management is prohibited from bargaining over the exercise of any authority under paragraph (a) of this section or the procedures that it will observe in exercising the authorities set forth in paragraphs (a)(1) and (a)(2) of this section.

(c) Notwithstanding paragraph (b) of this section, the Secretary in his or her sole, exclusive, and unreviewable discretion, may authorize bargaining over the procedures that will be observed in exercising the authorities set forth in paragraphs (a)(1) and (a)(2) of this section. This authorization will be based on a determination by the Secretary, in his or her sole, exclusive, and unreviewable discretion, that bargaining is necessary to advance the Department's mission or promote organizational effectiveness. Any specific authorization remains in effect until an agreement is reached or management withdraws from negotiations, whichever occurs first.

(d) Unless the Secretary elects to bargain under paragraph (c) of this section, management will consult at the request of an exclusive representative as required under § 9901.917 over the procedures that will be observed in exercising the authorities set forth in paragraphs (a)(1) and (a)(2) of this

section. Consultation does not require that the parties reach agreement on any covered matter. The parties may, upon mutual agreement, provide for FMCS or another third party to assist in this process. Neither the Board nor the Authority may intervene in this process.

(e) If an obligation exists under § 9901.917 to bargain or consult regarding any authority under paragraph (a) of this section, management will provide notice to the exclusive representative concurrently with the exercise of that authority. However, at its sole, exclusive, and unreviewable discretion, management may provide notice to an exclusive representative of its intention to exercise an authority under paragraph (a) of this section as far in advance as practicable. Further, nothing in paragraph (e) of this section establishes an independent right to bargain or consult.

(f) When an obligation exists under § 9901.917, management will provide notice to the exclusive representative and an opportunity to present its views and recommendations regarding the exercise of an authority under paragraph (a) of this section, and the parties will bargain at the level of recognition (unless otherwise delegated below that level, at their mutual agreement, or as provided for in §§ 9901.917 and 9901.918) over otherwise negotiable—

(1)(i) Appropriate arrangements for employees adversely affected by the exercise of any authority under paragraph (a)(3) of this section and procedures which management officials and supervisors will observe in exercising any authority under paragraph (a)(3) of this section; and

(ii) Appropriate arrangements for employees adversely affected by the exercise of any authority under paragraphs (a)(1) and (a)(2) of this section. Appropriate arrangements within the duty to bargain include proposals on matters such as personal hardships and safety measures.

(2) Appropriate arrangements within the duty to bargain do not include proposals on matters such as the routine assignment to specific duties, shifts, or work on a regular or overtime basis except when the Secretary in his or her sole, exclusive, and unreviewable discretion authorizes such bargaining. This authorization will be based on a determination by the Secretary, in his or her sole, exclusive, and unreviewable discretion, that bargaining is necessary to advance the Department's mission or promote organizational effectiveness. Any specific authorization remains in effect until an agreement is reached or management withdraws from negotiations, whichever occurs first.

(g) Where a proposal falls within the coverage of both paragraph (a)(1) and (a)(3) of this section or paragraph (a)(2) and (a)(3) of this section, the matter will be determined to be covered by paragraph (a)(1) or (a)(2) of this section for the purpose of collective bargaining.

(h) Any mid-term agreements, reached with respect to paragraphs (c), (f)(1)(ii), or (f)(2) of this section will not be precedential or binding on subsequent acts, or retroactively applied, except at the Secretary's sole, exclusive, and unreviewable discretion.

(i) Nothing will delay or prevent the Secretary from exercising his or her authority under this subpart.

§ 9901.911 Exclusive recognition of labor organizations.

Exclusive recognition will be accorded to a labor organization if the organization has been selected as the representative, in a secret ballot election, by a majority of the employees, in an appropriate unit as determined by the Authority, who cast valid ballots in the election.

§ 9901.912 Determination of appropriate units for labor organization representation.

(a) The Authority will determine the appropriateness of any unit. The Authority will determine in each case whether, in order to ensure employees the fullest freedom in exercising the rights guaranteed under this subpart, the appropriate unit should be established on a Department, plant, installation, functional, or other basis and will determine any unit to be an appropriate unit only if the determination will ensure a clear and identifiable community of interest among the employees in the unit and will promote effective dealings with, and efficiency of the operations of the Department, consistent with the Department's mission and organizational structure and § 9901.107(a).

(b) A unit may not be determined to be appropriate under this section solely on the basis of the extent to which employees in the proposed unit have organized, nor may a unit be determined to be appropriate if it includes—

(1) Except as provided under 5 U.S.C. 7135(a)(2), which is not waived for the purpose of this subpart, any management official or supervisor;

(2) A confidential employee;

(3) An employee engaged in personnel work in other than a purely clerical capacity;

(4) An employee engaged in administering the provisions of this subpart;

(5) Both professional employees and other employees, unless a majority of the professional employees vote for inclusion in the unit;

(6) Any employee engaged in intelligence, counterintelligence, investigative, or security work which directly affects national security; or

(7) Any employee primarily engaged in investigation or audit functions relating to the work of individuals employed by the Department whose duties directly affect the internal security of the Department, but only if the functions are undertaken to ensure that the duties are discharged honestly and with integrity.

(c) Any employee who is engaged in administering any provision of law or this subpart relating to labor-management relations may not be represented by a labor organization—

(1) Which represents other individuals to whom such provision or subpart applies; or

(2) Which is affiliated directly or indirectly with an organization which represents other individuals to whom such provision or subpart applies.

(d) Two or more units in the Department for which a labor organization is the exclusive representative may, upon petition by the Secretary or labor organization, be consolidated with or without an election into a single larger unit if the Authority considers the larger unit to be appropriate. The Authority will certify the labor organization as the exclusive representative of the new larger unit.

§ 9901.913 National consultation.

(a) If, in connection with the Department or Component, no labor organization has been accorded exclusive recognition on a Department or Component basis, a labor organization that is the exclusive representative of a substantial number of the employees of the Department or Component, as determined in accordance with criteria prescribed by the Authority, will be granted national consultation rights by the Department or Component. National consultation rights will terminate when the labor organization no longer meets the criteria prescribed by the Authority. Any issue relating to any labor organization's eligibility for, or continuation of, national consultation rights will be subject to determination by the Authority.

(b)(1) Any labor organization having national consultation rights in connection with any Department or Component under subsection (a) of this section will—

(i) Be informed of any substantive change in conditions of employment

proposed by the Department or Component; and

(ii) Be permitted reasonable time to present its views and recommendations regarding the changes.

(2) If any views or recommendations are presented under paragraph (b)(1) of this subsection to the Department or Component by any labor organization—

(i) The Department or Component will consider the views or recommendations before taking final action on any matter with respect to which the views or recommendations are presented; and

(ii) The Department or Component will provide the labor organization a written statement of the reasons for taking the final action.

(c) Section 9901.913(b) does not apply where the proposed change is bargained at the national level or where continuing collaboration procedures under § 9901.106 apply.

(d) Nothing in this section precludes the Department or the Component from seeking views and recommendations from labor organizations having exclusive representation within the Department or Component which do not have national consultation rights.

(e) Nothing in this section will be construed to limit the right of the agency or exclusive representative to engage in collective bargaining.

§ 9901.914 Representation rights and duties.

(a)(1) A labor organization which has been accorded exclusive recognition is the exclusive representative of the employees in the unit it represents and is entitled to act for, and negotiate collective bargaining agreements covering, all employees in the unit. An exclusive representative is responsible for representing the interests of all employees in the unit it represents without discrimination and without regard to labor organization membership.

(2) An exclusive representative of an appropriate unit will be given the opportunity to be represented at—

(i) Any formal discussion between a Department management official(s) and bargaining unit employees, the purpose of which is to discuss and/or announce new or substantially changed personnel policies, practices, or working conditions. This right does not apply to meetings between a management official(s) and bargaining unit employees for the purpose of discussing operational matters where any discussion of personnel policies, practices or working conditions—

(A) Constitutes a reiteration or application of existing personnel policies, practices, or working conditions;

(B) Is incidental or otherwise peripheral to the announced purpose of the meeting; or

(C) Does not result in an announcement of a change to, or a promise to change, an existing personnel policy(s), practice(s), or working condition(s);

(ii) Any discussion between one or more Department representatives and one or more bargaining unit employees concerning any grievance filed under the negotiated grievance procedure;

(iii) Any examination of a bargaining unit employee by a representative of the Department in connection with an investigation if the employee reasonably believes that the examination may result in disciplinary action against the employee and the employee requests such representation; or

(iv) Any discussion between one or more Department representatives and one or more bargaining unit employees in connection with a formal complaint of discrimination only if the employee(s), in his or her sole and exclusive discretion, requests such representation.

(3) Bargaining unit employees will be informed annually of their rights under paragraph (a)(2)(iii) of this section.

(4) Employee representatives employed by the Department are subject to the same expectations regarding conduct as any other employee, whether they are serving in their representative capacity or not.

(5) Except in the case of grievance procedures negotiated under this subpart, the rights of an exclusive representative under this section may not be construed to preclude an employee from—

(i) Being represented by an attorney or other representative of the employee's own choosing, other than the exclusive representative, in any grievance or appeal action; or

(ii) Exercising grievance or appellate rights established by law, rule, or regulation.

(b) The duty of the Secretary or appropriate Component(s) of the Department and an exclusive representative to negotiate in good faith under paragraph (a) of this section includes the obligation—

(1) To approach the negotiations with a sincere resolve to reach a collective bargaining agreement;

(2) To be represented at the negotiations by duly authorized representatives prepared to discuss and negotiate on any condition of employment;

(3) To meet at reasonable times and convenient places as frequently as may be necessary, and to avoid unnecessary delays;

(4) If agreement is reached, to execute on the request of any party to the negotiation, a written document embodying the agreed terms, and to take such steps as are necessary to implement such agreement; and

(5) In the case of the Department or appropriate Component(s) of the Department, to furnish information to an exclusive representative, or its authorized representative, when—

(i) Such information exists, is normally maintained in the regular course of business, and is reasonably available;

(ii) The exclusive representative has requested such information and demonstrated a particularized need for the information in order to perform its representational functions in grievance or unfair labor practice proceedings, or in negotiations; and

(iii) Disclosure is not prohibited by law.

(c) Disclosure of information in paragraph (b)(5) of this section does not include the following:

(1) Disclosure prohibited by law or regulations, including, but not limited to, the regulations in this part, Governmentwide rules and regulations, Departmental implementing issuances and other policies and regulations, and Executive orders;

(2) Disclosure of information if adequate alternative means exist for obtaining the requested information, or if proper discussion, understanding, or negotiation of a particular subject within the scope of collective bargaining is possible without recourse to the information;

(3) Internal Departmental guidance, counsel, advice, or training for managers and supervisors relating to collective bargaining;

(4) Any disclosures where an authorized official has determined that disclosure would compromise the Department's mission, security, or employee safety; and

(5) Personal addresses, personal telephone numbers, personal e-mail addresses, or any other information not related to an employee's work.

(d)(1) An agreement between the Department or appropriate Component(s) of the Department and the exclusive representative is subject to approval by the Secretary.

(2) The Secretary will approve the agreement within 30 days after the date the agreement is executed if the agreement is in accordance with the provisions of these regulations and any

other applicable law, rule, regulation, issuance, or implementing issuance.

(3) If the Secretary does not approve or disapprove the agreement within the 30-day period specified in paragraph (d)(2) of this section, the agreement will take effect and is binding on the Department or Component(s), as appropriate, and the exclusive representative, but only to the extent it is consistent with Federal law, Presidential issuance (*e.g.*, Executive order), Governmentwide regulations, issuances and implementing issuances, or the regulations in this part.

(4) A local agreement subject to a national or other controlling agreement at a higher level may be approved under the procedures of the controlling agreement or, if none, under Departmental regulations. Bargaining will be at the level of recognition except where delegated.

(5) Provisions in existing collective bargaining agreements are unenforceable if they are contrary to Federal law, Presidential issuance (*e.g.*, Executive order), the regulations in this part, or implementing issuances. Provisions in existing collective bargaining agreements that are inconsistent with Governmentwide regulations or issuances (other than implementing issuances), are unenforceable upon expiration, extension, renewal, or renegotiation of the collective bargaining agreement, whichever occurs first.

§ 9901.915 Allotments to representatives.

(a) If the Department has received from an employee in an appropriate unit a properly executed written or electronic assignment which authorizes the Department to deduct from the pay of the employee amounts for the payment of regular and periodic dues and other financial assessments of the exclusive representative of the unit, the Department will honor the assignment and make an appropriate allotment pursuant to the assignment. Any such allotment will be made at no cost to the exclusive representative or the employee. Except as provided under paragraph (b) of this section, any such assignment may not be revoked for a period of 1 year.

(b) An allotment under paragraph (a) of this section for the deduction of dues with respect to any employee terminates when—

(1) The agreement between the Department or Department Component and the exclusive representative involved ceases to be applicable to the employee; or

(2) The employee is suspended or expelled from membership by the exclusive representative.

(c)(1) Subject to paragraph (c)(2) of this section, if a petition has been filed with the Authority by a labor organization alleging that 10 percent of the employees in an appropriate unit in the Department have membership in the labor organization, the Authority will investigate the petition to determine its validity. Upon certification by the Authority of the validity of the petition, the Department has a duty to negotiate with the labor organization solely concerning the deduction of dues of the labor organization from the pay of the members of the labor organization who are employees in the unit and who make a voluntary allotment for such purpose.

(2)(i) The provisions of paragraph (c)(1) of this section do not apply in the case of any appropriate unit for which there is an exclusive representative.

(ii) Any agreement under paragraph (c)(1) of this section between a labor organization and the Department or Department Component with respect to an appropriate unit becomes null and void upon the certification of an exclusive representative of the unit.

§ 9901.916 Unfair labor practices.

(a) For the purpose of this subpart, it is an unfair labor practice for the Department—

(1) To interfere with, restrain, or coerce any employee in the exercise by the employee of any right under this subpart;

(2) To encourage or discourage membership in any labor organization by discrimination in connection with hiring, tenure, promotion, or other conditions of employment;

(3) To sponsor, control, or otherwise assist any labor organization, other than to furnish, upon request, customary and routine services and facilities on an impartial basis to other labor organizations having equivalent status;

(4) To discipline or otherwise discriminate against an employee because the employee has filed a complaint or petition, or has given any information or testimony under this subpart;

(5) To refuse, as determined by the Board, to negotiate in good faith or to consult with a labor organization, as required by this subpart;

(6) To fail or refuse, as determined by the Board, to cooperate in impasse procedures and impasse decisions, as required by this subpart;

(7) To enforce any issuance (other than an implementing issuance), or Governmentwide regulation, which is in conflict with an applicable collective bargaining agreement if the agreement was in effect before the issuance or regulation was prescribed.

(8) To fail or refuse otherwise to comply with any provision of this subpart.

(b) For the purpose of this subpart, it is an unfair labor practice for a labor organization—

(1) To interfere with, restrain, or coerce any employee in the exercise by the employee of any right under this subpart;

(2) To cause or attempt to cause the Department to discriminate against any employee in the exercise by the employee of any right under this subpart;

(3) To coerce, discipline, fine, or attempt to coerce a member of the labor organization as punishment, reprisal, or for the purpose of hindering or impeding the member's work performance or productivity as an employee or the discharge of the member's duties as an employee;

(4) To discriminate against an employee with regard to the terms and conditions of membership in the labor organization on the basis of race, color, creed, national origin, sex, age, preferential or nonpreferential civil service status, political affiliation, marital status, or handicapping condition;

(5) To refuse, as determined by the Board, to negotiate in good faith or to consult with the Department as required by this subpart;

(6) To fail or refuse, as determined by the Board, to cooperate in impasse procedures and impasse decisions as required by this subpart;

(7)(i) To call, or participate in, a strike, work stoppage, or slowdown, or picketing of the Department in a labor-management dispute if such picketing interferes with an agency's operations; or

(ii) To condone any activity described in paragraph (b)(7)(i) of this section by failing to take action to prevent or stop such activity; or

(8) To otherwise fail or refuse to comply with any provision of this subpart.

(c) Notwithstanding paragraph (b)(7) of this section, informational picketing which does not interfere with the Department's operations will not be considered an unfair labor practice.

(d) For the purpose of this subpart, it is an unfair labor practice for an exclusive representative to deny membership to any employee in the appropriate unit represented by the labor organization, except for failure to meet reasonable occupational standards uniformly required for admission or to

tender dues uniformly required as a condition of acquiring and retaining membership. This does not preclude any labor organization from enforcing discipline in accordance with procedures under its constitution or bylaws to the extent consistent with the provisions of this subpart.

(e) The Board will not consider any allegation of an unfair labor practice filed more than 6 months after it occurred, unless the Board determines, pursuant to its regulations, that there is good cause for the late filing.

(f) Unfair labor practice issues which can properly be raised under an appeals procedure may not be raised as unfair labor practices prohibited under this section. Except where an employee has an option of using the negotiated grievance procedure or an appeals procedure in connection with an adverse action, issues which can be raised under a grievance procedure may, in the discretion of the aggrieved party, be raised under the grievance procedure or as an unfair labor practice under this section, but not under both procedures.

(g) The expression of any personal view, argument, opinion, or the making of any statement which publicizes the fact of a representational election and encourages employees to exercise their right to vote in such an election, corrects the record with respect to any false or misleading statement made by any person, or informs employees of the Government's policy relating to labor-management relations and representation, will not, if the expression contains no threat of reprisal or force or promise of benefit or was not made under coercive conditions—

(1) Constitute an unfair labor practice under any provision of this subpart; or

(2) Constitute grounds for the setting aside of any election conducted under any provision of this subpart.

§ 9901.917 Duty to bargain and consult.

(a) The Department or appropriate Component(s) of the Department and any exclusive representative in any appropriate unit in the Department, through appropriate representatives, will meet and negotiate in good faith as provided by this subpart for the purpose of arriving at a collective bargaining agreement. In addition, the Department or appropriate Component(s) of the Department and the exclusive representative may determine appropriate techniques, consistent with the operational rules of the Board, to assist in any negotiation.

(b) If bargaining over an initial collective bargaining agreement or any successor agreement is not completed within 90 days after such bargaining begins, the parties may mutually agree to continue bargaining, or either party may refer the matter to the Board for resolution in accordance with procedures established by the Board. At any time prior to going to the Board, either party may refer the matter to FMCS for assistance.

(c) If the parties bargain during the term of an existing collective bargaining agreement, or in the absence of a collective bargaining agreement, over a proposed change affecting bargaining unit employees' conditions of employment, and no agreement is reached within 30 days after such bargaining begins, the parties may mutually agree to continue bargaining, or either party may refer the matter to the Board for resolution in accordance with procedures established by the Board. Either party may refer the matter to FMCS for assistance at any time.

(d)(1) Management may not bargain over any matters that are inconsistent with law or the regulations in this part, Governmentwide rules and regulations, issuances and implementing issuances, or Executive orders.

(2) Except as otherwise provided in § 9901.910(d), management has no obligation to bargain or consult over a change to a condition of employment unless the change is otherwise negotiable pursuant to these regulations and is foreseeable, substantial, and significant in terms of both impact and duration on the bargaining unit, or on those employees in that part of the bargaining unit affected by the change.

(3) Nothing in paragraphs (b) or (c) of this section prevents management from exercising the rights enumerated in § 9901.910.

(e) If a management official involved in collective bargaining with an exclusive representative alleges that the duty to bargain in good faith does not extend to any matter, the exclusive representative may appeal the allegation to the Board in accordance with procedures established by the Board.

§ 9901.918 Multi-unit bargaining.

(a) Negotiations can occur at geographical or organizational levels within DoD or a Component with the local exclusive representatives impacted by the proposed change.

(b) Any such negotiations will—

(1) Be binding on all parties afforded the opportunity to bargain with representatives of DoD or the Component;

(2) Supersede all conflicting provisions of applicable collective bargaining agreements of the labor organization(s) affected by the negotiations; and

(3) Be subject to impasse resolution by the Board under procedures prescribed by the Board. In resolving impasses, the Board will ensure that agreement provisions are consistent with regard to all similarly situated employees. The determination as to which organizations are covered under multi-unit bargaining is not subject to review by the Board.

(c) When agreement is reached under this section, individual bargaining units cannot opt out of or veto the agreement.

(d) Any party may request the services of FMCS to assist with these negotiations.

(e) Labor organizations may request multi-unit bargaining, as appropriate. The Secretary has sole and exclusive authority to grant the labor organizations' request.

(f) The Department will prescribe implementing issuances on the procedures and constraints associated with multi-unit bargaining.

§ 9901.919 Collective bargaining above the level of recognition.

(a) Negotiations can occur at the DoD or Component level with labor organization(s) at an organizational level above the level of exclusive recognition. The decision to negotiate at a level above the level of recognition as well as the unions involved, is within the sole and exclusive discretion of the Secretary to determine and will not be subject to review.

(b) Any such agreement reached in these negotiations will—

(1) Be binding on all subordinate bargaining units of the labor organization(s) afforded the opportunity to bargain above the level of recognition, and on DoD and its Components, without regard to levels of recognition;

(2) Supersede all conflicting provisions of other collective bargaining agreements of the labor organization(s), including collective bargaining agreements negotiated with an exclusive representative at the level of recognition, except as otherwise determined by the Secretary;

(3) Not be subject to further negotiations with the labor organizations for any purpose, including bargaining at the level of recognition, except as the Secretary may decide, in his or her sole and exclusive discretion; and

(4) Be subject to review by the Board only to the extent provided by this subpart.

(c) When agreement is reached under this section, individual labor organizations or bargaining units cannot opt out of or veto the agreement.

(d) Negotiations will be subject to impasse resolution by the Board under

procedures prescribed by the Board. In resolving impasses, the Board will ensure that agreement provisions are consistent with regard to all similarly situated employees. The determination as to which organizations are covered under national level bargaining is not subject to review by the Board;

(e) The National Guard Bureau and the Army and Air Force National Guard are excluded from coverage under this section. Where National Guard employees are impacted, negotiations at the level of recognition are authorized.

(f) The Secretary may require and a labor organization or organizations may request bargaining above the level of recognition, as appropriate. The Secretary has sole and exclusive authority to grant such requests; and

(g) The Department will prescribe implementing issuances on the procedures and constraints associated with collective bargaining above the level of recognition.

§ 9901.920 Negotiation impasses.

(a) If the Department and exclusive representative are unable to reach an agreement under §§ 9901.905, 9901.914, 9901.917, 9901.918, or 9901.919, either party may submit the disputed issues to the Board for resolution.

(b) The Board may take whatever action is necessary and not inconsistent with this subpart to resolve the impasse, to include use of settlement efforts.

(c) Pursuant to §§ 9901.907 and 9901.926, the Board's regulations will provide for a single, integrated process to address all matters associated with a negotiations dispute, including unfair labor practices, negotiability disputes, and negotiation impasses.

(d) Notice of any final action of the Board under this section will be promptly served upon the parties. The action will be binding on such parties during the term of the agreement, unless the parties agree otherwise.

§ 9901.921 Standards of conduct for labor organizations.

Standards of conduct for labor organizations are those prescribed under 5 U.S.C. 7120, which is not modified.

§ 9901.922 Grievance procedures.

(a)(1) Except as provided in paragraph (a)(2) of this section, any collective bargaining agreement will provide procedures for the settlement of grievances, including questions of arbitrability. Except as provided in paragraphs (e), (f) and (h) of this section, the procedures will be the exclusive procedures for grievances which fall within its coverage.

(2) Any collective bargaining agreement may exclude any matter from the application of the grievance procedures which are provided for in the agreement.

(b)(1) Any negotiated grievance procedure referred to in paragraph (a) of this section will be fair and simple, provide for expeditious processing, and include procedures that—

(i) Assure an exclusive representative the right, in its own behalf or on behalf of any employee in the unit represented by the exclusive representative, to present and process grievances;

(ii) Assure such an employee the right to present a grievance on the employee's own behalf, and assure the exclusive representative the right to be present during the grievance proceeding; and

(iii) Provide that any grievance not satisfactorily settled under the negotiated grievance procedure is subject to binding arbitration, which may be invoked by either the exclusive representative or the Department.

(2) The provisions of a negotiated grievance procedure providing for binding arbitration in accordance with paragraph (b)(1)(iii) of this section will, to the extent that an alleged prohibited personnel practice is involved, allow the arbitrator to order a stay of any personnel action in a manner similar to the manner described in 5 U.S.C. 1221(c) with respect to the Merit Systems Protection Board and order the Department to take any disciplinary action identified under 5 U.S.C. 1215(a)(3) that is otherwise within the authority of the Department to take.

(3) Any employee who is the subject of any disciplinary action ordered under paragraph (b)(2) of this section may appeal such action to the same extent and in the same manner as if the Department had taken the disciplinary action absent arbitration.

(c) The preceding paragraphs of this section do not apply with respect to any matter concerning—

(1) Any claimed violation of 5 U.S.C. chapter 73, subchapter III (relating to prohibited political activities);

(2) Retirement, life insurance, or health insurance;

(3) Any examination, certification, or appointment;

(4) A removal taken under mandatory removal authority as defined in § 9901.712;

(5) Any subject not within the definition of *grievance* in § 9901.903 (*e.g.,* the classification or pay of any position), except for an adverse action under applicable authority, including subpart G of this part, which is not otherwise excluded by paragraph (c) of this section; or

(6) A suspension or removal taken under 5 U.S.C. 7532.

(d) To the extent not already excluded by existing collective bargaining agreements, the exclusions contained in paragraph (c) of this section apply upon the effective date of this subpart, as determined under § 9901.102(b)(1).

(e)(1) An aggrieved employee affected by a prohibited personnel practice under 5 U.S.C. 2302(b)(1) which also falls under the coverage of the negotiated grievance procedure may raise the matter under the applicable statutory procedures, or the negotiated procedure, but not both.

(2) An employee is deemed to have exercised his or her option under paragraph (e)(1) of this section to raise the matter under the applicable statutory procedures, or the negotiated procedure, at such time as the employee timely initiates an action under the applicable statutory or regulatory procedure or timely files a grievance in writing in accordance with the provisions of the parties' negotiated grievance procedure, whichever event occurs first.

(3) Selection of the negotiated grievance procedure in no manner prejudices the right of an aggrieved party to request the Merit Systems Protection Board to review the final decision pursuant to 5 U.S.C. 7702 in the case of any personnel action that could have been appealed to the Board, or, where applicable, to request the Equal Employment Opportunity Commission to review a final decision in any other matter involving a complaint of discrimination of the type prohibited by any law administered by the Equal Employment Opportunity Commission.

(f)(1) For appealable matters, except for mandatory removal offenses under § 9901.712, an aggrieved employee may raise the matter under an applicable appellate procedure or under the negotiated grievance procedure, but not both. An employee will be deemed to have exercised his or her option under this section when the employee timely files an appeal under the applicable appellate procedures or a grievance in accordance with the provisions of the parties' negotiated grievance procedure, whichever occurs first.

(2) An arbitrator hearing a matter appealable under 5 U.S.C. 7701 or subpart H of this part is bound by the applicable provisions of this part.

(g)(1) This paragraph applies with respect to a prohibited personnel practice other than a prohibited personnel practice to which paragraph (e) of this section applies.

(2) An aggrieved employee affected by a prohibited personnel practice described in paragraph (g)(1) of this

section may elect not more than one of the procedures described in paragraph (g)(3) of this section with respect thereto. A determination as to whether a particular procedure for seeking a remedy has been elected will be made as set forth under paragraph (g)(4) of this section.

(3) The procedures for seeking remedies described in this paragraph are as follows:

(i) An appeal under 5 U.S.C. 7701 or under subpart H of this part;

(ii) A negotiated grievance under this section; and

(iii) Corrective action under 5 U.S.C. chapter 12, subchapters II and III.

(4) For the purpose of this paragraph, an employee is considered to have elected one of the following, whichever election occurs first:

(i) The procedure described in paragraph (g)(3)(i) of this section if such employee has timely filed a notice of appeal under the applicable appellate procedures;

(ii) The procedure described in paragraph (g)(3)(ii) of this section if such employee has timely filed a grievance in writing in accordance with the provisions of the parties' negotiated procedure; or

(iii) The procedure described in paragraph (g)(3)(iii) of this section if such employee has sought corrective action from the Office of Special Counsel by making an allegation under 5 U.S.C. 1214(a)(1).

(h)(1) An employee may challenge a rating of record issued under subpart D of this part, through either the negotiated grievance procedure or an administrative reconsideration process under § 9901.409(h), but not both, so long as the rating of record has not been raised in connection with an appeal under the provisions of 5 U.S.C. 7701 or subpart H of this part. Once an employee raises an issue on his or her rating of record issue in an appeal under 5 U.S.C. 7701 or subpart H of this part, any pending grievance, arbitration, or request for administrative reconsideration under § 9901.409(h), will be dismissed with prejudice.

(2) Final decision authority in the negotiated grievance procedure may rest with—

(i) An independent arbitrator; or

(ii) A panel consisting of an independent arbitrator, a union representative, and a management representative.

(3) An arbitrator or panel may not conduct an independent evaluation of the employee's performance, determine the appropriate share payout, or otherwise substitute his or her judgment for that of the supervisor or pay pool panel.

(i) An arbitrator or panel hearing a matter under this subpart is bound by all applicable laws, rules, regulations, including applicable provisions of this part, issuances, and implementing issuances.

§ 9901.923 Exceptions to arbitration awards.

(a) Either party to arbitration under this subpart may file with the Board an exception to any arbitrator's award, except an award issued in connection with an appealable matter under § 9901.922(f) or matters similar to those covered under 5 U.S.C. 4303 and 7512 arising under other personnel systems, which will be adjudicated under procedures described in § 9901.807(g) and (h). Such procedures are adopted in this subpart for these purposes.

(b) In addition to the bases contained in 5 U.S.C. 7122, exceptions may also be filed by the parties based on the arbitrator's failure to properly consider the Department's national security mission or to comply with applicable issuances and implementing issuances. The Board may take such action concerning the award as is consistent with this subpart.

(c) If no exception to an arbitrator's award is filed under paragraph (a) of this section during the 30-day period beginning on the date of such award, the award is final and binding. Either party will take the actions required by an arbitrator's final award. The award may include the payment of back pay (as provided under 5 U.S.C. 5596 and 5 CFR part 550, subpart H).

(d) Nothing in this section prevents the Board from determining its own jurisdiction without regard to whether any party has raised a jurisdictional issue.

§ 9901.924 Official time.

(a) Any employee representing an exclusive representative in the negotiation of a collective bargaining agreement under this subpart will be authorized official time for such purposes, including attendance at impasse proceedings, during the time the employee otherwise would be in a duty status. The number of employees for whom official time is authorized under this section may not exceed the number of individuals designated as representing the Department for such purposes.

(b) Any activities performed by any employee relating to the internal business of the labor organization, including but not limited to the solicitation of membership, elections of labor organization officials, and collection of dues, will be performed during the time the employee is in a nonduty status.

(c) Except as provided in paragraph (a) of this section, the Authority or the Board, as appropriate, will determine whether an employee participating for, or on behalf of, a labor organization in any phase of proceedings before the Authority or the Board will be authorized official time for such purpose during the time the employee would otherwise be in a duty status.

(d) Except as provided in the preceding paragraphs of this section, any employee representing an exclusive representative or, in connection with any other matter covered by this subpart, any employee in an appropriate unit represented by an exclusive representative, will be granted official time in any amount the agency and the exclusive representative involved agree to be reasonable, necessary, and in the public interest.

(e) Official time for representational activities will not extend to the representation of employees outside the representative's bargaining unit, except for multi-unit bargaining and/or bargaining above the level of recognition, in accordance with §§ 9901.918 and 9901.919 and mutual agreement of the agency and the exclusive representatives involved.

§ 9901.925 Compilation and publication of data.

(a) The Board will maintain a file of its proceedings.

(b) All files maintained under paragraph (a) of this section will be open to inspection and reproduction in accordance with 5 U.S.C. 552 and 552a. The Board will establish rules in consultation with the Department for maintaining and making available for inspection sensitive information.

§ 9901.926 Regulations of the Board.

The Department may issue initial interim rules for the operation of the Board and will consult with labor organizations granted national consultation rights on the rules. The Board will prescribe and publish rules for its operation in the **Federal Register.**

§ 9901.927 Continuation of existing laws, recognitions, agreements, and procedures.

(a) Except as otherwise provided by §§ 9901.905 or 9901.912, nothing contained in this subpart precludes the renewal or continuation of an exclusive recognition, certification of an exclusive representative, or an agreement that is otherwise consistent with law, the regulations in this part and DoD or

Component issuances between the Department or a Component thereof and an exclusive representative of its employees, which is entered into before the effective date of this subpart, as determined under § 9901.102(b)(1).

(b) Policies, regulations, and procedures established under and decisions issued under Executive Orders 11491, 11616, 11636, 11787, and 11838 or any other Executive order, in effect on the effective date of this subpart (as determined under § 9901.102(b)(1)), will remain in full force and effect until revised or revoked by the President, or unless superseded by specific provisions of this subpart or by implementing issuances or decisions issued pursuant to this subpart.

§ 9901.928 Savings provisions.

This subpart does not apply to grievances or other administrative proceedings already pending on the date of coverage of this subpart, as determined under § 9901.102(b)(1). Any remedy that applies after the date of coverage under any provision of this part and that is in conflict with applicable provisions of this part is not enforceable.

[FR Doc. 05–21494 Filed 10–27–05; 8:45 am]

BILLING CODE 6325–39–P; 5001–06–P

Federal Register

Tuesday,
November 1, 2005

Part V

Department of Housing and Urban Development

Regulatory and Administrative Waivers Granted for Public and Indian Housing Programs To Assist With Recovery and Relief in Hurricane Rita Disaster Areas; and Additional Administrative Relief for Hurricane Katrina; Notice

DEPARTMENT OF HOUSING AND URBAN DEVELOPMENT

[Docket No. FR–5022–N–01]

Regulatory and Administrative Waivers Granted for Public and Indian Housing Programs To Assist With Recovery and Relief in Hurricane Rita Disaster Areas; and Additional Administrative Relief for Hurricane Katrina

AGENCY: Office of the Assistant Secretary for Public and Indian Housing, HUD.

ACTION: Notice.

SUMMARY: Similar to HUD's notice published on October 3, 2005, regarding administrative actions to bring relief to areas affected by Hurricane Katrina, this notice advises the public of HUD regulations and other administrative requirements governing HUD's Office of Public and Indian Housing (PIH) programs that have been waived in order to facilitate the delivery of safe and decent housing under these programs to families and individuals who have been displaced from their housing by Hurricane Rita. Entities that administer PIH programs, which include public housing agencies (PHAs), Indian and tribally designated housing entities (TDHEs), and local and tribal governments, and are located in an area declared by the President to be a federal disaster area as a result of Hurricane Rita, may defer compliance with the regulations and other requirements listed in this notice for an initial period of 12 months or such other period as may be specified in this notice. PIH program administrators that are not located in a disaster area but assisting with Hurricane Rita recovery and relief may request waiver of the regulations and administrative requirements listed in this notice, and HUD review and response is available through an expedited waiver request and response process. PIH program administrators, located in an area declared a federal disaster area as a result of Hurricane Rita, or PIH program administrators not located in such an area but assisting with Hurricane Rita relief and recovery efforts, may request waiver of a regulation or other administrative requirement through the expedited waiver process provided in this notice.

This notice applies only to PIH programs or to cross-cutting regulatory or administrative requirements that are applicable to PIH program administrators.

This notice provides in Section III.A.2 for an extension for improved performance by certain PHAs located in areas declared a federal disaster area as a result of Hurricane Katrina, which supplements the waivers made available under the procedures described in the October 3, 2005, notice.

DATES: *Effective Date:* October 25, 2005.

FOR FURTHER INFORMATION CONTACT: PIH Disaster Relief Officer, Office of Policy Programs and Legislation, Office of Public and Indian Housing, Department of Housing and Urban Development, 451 Seventh Street, SW., Room 4116, Washington, DC 20410–5000, telephone number (202) 708–4016, extension 4245, or (202) 708–0713, extension 7651. Persons with hearing or speech impairments may access this number via TTY by calling the Federal Information Relay Service at (800) 877–8339.

SUPPLEMENTARY INFORMATION:

I. Background Information

In September 2005, Hurricane Rita closely followed Hurricane Katrina and once again hit the Gulf Coast area of the United States, adding to the damage to property and displacement of individuals and families from their homes and communities that already had been caused by Hurricane Katrina. The President directed federal agencies to include victims of Hurricane Rita in relief and recovery efforts underway for victims of Hurricane Katrina, and to eliminate ''red tape'' where feasible that will impede the delivery of federal financial assistance and other needed benefits.

Similar to the notice of waiver of regulations and administrative requirements that HUD published on October 3, 2005 (70 FR 57716), to assist PIH program administrators in Hurricane Katrina disaster areas, this notice identifies HUD regulations and other administrative requirements governing HUD's PIH programs that are waived or temporarily suspended or deferred in an area declared by the President to be a federal disaster area as a result of Hurricane Rita (disaster area). In addition, HUD will provide an expedited review process to waive the requirements listed in this notice upon request from PIH program administrators that are not located in disaster areas but are assisting with Hurricane Rita recovery and relief efforts.

HUD's Office of Public and Indian Housing examined the regulations governing PIH programs and recommended waiver or temporary suspension or deferral of those regulations that the office believes could impede PIH program administrators in their effort to expeditiously assist with housing current PIH program participants who lost housing as a result of Hurricane Rita, as well as others who now need housing assistance under PIH programs as a result of the hurricane. PIH program administrators that are located in a disaster area may defer compliance with the requirements listed in this notice for an initial period of 12 months under the notification process described in this notice. The requirements listed in this notice that have been deferred, or temporarily suspended by waiver include regulatory and other administrative provisions that require periodic reporting and other information delivery by PHAs, Indian tribes, and TDHEs. While such reporting is important to ensure effective and efficient administration of PIH programs, these requirements have been waived in order that PIH program administrators may focus their time and resources on identifying and providing decent and safe housing during this period of unparalleled displacement of families and individuals.

For the majority of the regulations and administrative requirements listed in this notice and for which a waiver was granted, HUD did not waive the requirements entirely but deferred compliance until such time as compliance may be feasible; for example, in many cases HUD extended deadlines for reports or other documents that PIH program administrators must submit to HUD. Because Hurricane Rita compounded and exacerbated the damage caused by Hurricane Katrina, the damage to the Gulf Coast area remains unprecedented, and the need for housing and other basic life saving and sustaining relief is widespread and immediate, HUD is relying on its experienced partners in the HUD housing-assistance programs who are in the front-line of recovery efforts to meet the challenge of providing decent, safe, and sanitary housing as expeditiously as possible and to comply to the extent possible with the regulations that promote that goal. HUD does not want the time and resources of PHAs, Indian tribes, and TDHEs diverted by requirements that are important but can be deferred until such time as a degree of normalcy in operations returns to the disaster areas. As the recovery period proceeds, HUD may identify other regulations for which waiver or temporary deferral or suspension is needed or determine that other alternative requirements may be necessary to assist with facilitation of delivery of housing to those most in need. Any additional HUD waivers or suspensions or other alternative requirements will be announced by

direct notice to PIH program administrators and by **Federal Register** publication.

PIH program administrators that are not located in a disaster area but are assisting with Hurricane Rita recovery and relief efforts may request waiver of the regulations and administrative requirements listed in this notice through the expedited waiver request and response process set forth in this notice.

In addition to the waiver of regulatory requirements, some statutory provisions contain built-in waiver provisions that allow administrative waiver of the statutory requirements for cause. Certain of those provisions are included in Section III.A of this notice.

This notice lists HUD regulatory and administrative requirements that the Office of PIH determined needed to be waived or temporarily deferred or suspended during the Hurricane Rita recovery period. If PHAs, Indian tribes, and TDHEs, and other PIH program administrators identify other regulations that they believe should be waived, they should seek a waiver by submitting a waiver request, which specifies the need for a waiver, to the email address provided below in Section II, which describes the expedited waiver process.

II. Waiver Process

A. For PIH Program Administrators in Declared Disaster Areas

Entities that administer public or Indian housing or voucher programs and are located in the areas declared a federal disaster area as a result of Hurricane Rita may defer or suspend compliance with the regulations and other administrative requirements listed in this notice, with the exception of the waiver of the provision in Section III.B.12, upon the effective date of this notice, for an initial period of 12 months or for such other period as may be specified in this notice. These entities, however, should notify HUD within two weeks of determination of the need to utilize the waived requirements in this notice, or as soon as possible, by contacting HUD in the manner detailed in the following paragraph.

An official of the PHA, TDHE, tribal or local government that seeks the suspension of compliance with requirements listed in this notice must contact HUD in writing (email communication is allowed) and identify the requirements by section and number utilized in this notice (e.g., Section III.A.2., Section III.B. 1, 2, 3, etc., or ''all of the waived or suspended requirements in Section III''). The following email address has been established in order to expedite the process: *Pih_Ritadisaster_Relief@hud.gov.* Please note that this email address is different from the email address provided for Hurricane Katrina. In addition, a checklist of the waived or suspended requirements is available at HUD's Web site at *http://www.hud.gov/katrina/proguidance.cfm*, and an eligible PHA can use this checklist to identify the waived or suspended requirements that it will utilize.

This is a notification process only, and HUD asks that this notification be made to HUD no later than two weeks after a PHA determines the need to rely on one or more or all of the waived or suspended requirements in this notice. While, as noted earlier, HUD does not want to impose additional administrative requirements on PIH program administrators located in the disaster areas during this period, it is important and helpful for HUD to know how these entities are administering their PIH programs during the recovery period, as HUD has tried to make this notification process as easy as possible. HUD will maintain information on the names of the PHAs, Indian tribes, or TDHEs that have deferred compliance with certain regulatory and administrative requirements in accordance with this notice. The regulation or administrative requirement will remain inapplicable for a period of 12 months and will be considered waived or suspended by HUD for an additional three months upon notification to HUD following the same notification process described above.

B. For PIH Program Participants in Non-Disaster Declared Areas

PIH program administrators that are not located in a disaster area but are contributing to Hurricane Rita relief and recovery efforts may request a waiver of the regulations or administrative requirements listed in this notice by sending a request for a waiver to the *PIH_RitaDisaster_Relief@hud.gov* email address. The request must specify the need, including justification, for the waiver of the requirement. Waiver requests submitted through this email address will receive priority processing.

C. Regulations and Requirements Not Waived in This Notice

For any regulation or other administrative requirement not listed in this notice for which a PIH program administrator seeks waiver or suspension, the program administrator may seek a waiver by sending a request to the *PIH_RitaDisaster_Relief@hud.gov* email address. The request must specify the need, including justification, for the waiver of the requirement. As noted earlier, waiver requests submitted through this email address will receive priority processing, and HUD will respond to the requestor by email.

The expedited waiver process is provided only for waiver or suspension of requirements that will assist with the Hurricane Rita relief and recovery efforts. HUD will not respond to any waiver requests submitted to this email address that are unrelated to relief and recovery of the disaster areas.

III. Authority To Grant Waivers

Generally, waivers of HUD regulations are handled on a case-by-case basis. Under statutory requirements set forth in section 7(q) of the Department of Housing and Urban Development Act (42 U.S.C. 3535(q)), a regulated party that seeks a waiver of a HUD regulation must request a waiver from HUD in writing, and the waiver request must specify the need for the waiver. HUD then responds to the request in writing and, if the waiver is granted, HUD includes a summary of the waiver granted (and all regulatory waivers granted during a three-month period) in a **Federal Register** notice that is published quarterly. Since the damage to property and the displacement of families and individuals in the disaster areas is massive, and the need for regulatory relief in many areas pertaining to HUD-assisted housing is readily apparent, HUD is suspending its usual regulatory waiver protocols for the disaster areas and has substituted an expedited process that meets the requirements of section 7(q).

In a quarterly notice of regulations waived, HUD will identify the PIH program administrators in the disaster areas that are utilizing one or more of the waived regulations in this notice or other regulations for which a waiver was requested or granted. The quarterly notice will also identify PIH program administrators that are located in non-federally declared disaster areas and are contributing to Hurricane Rita relief and recovery efforts that requested and were granted waivers in accordance with the waiver process provided in this notice.

The regulatory and administrative requirements set forth in Section III of this notice have been waived or temporarily deferred or suspended as provided in this notice. This action was determined necessary to assist PIH program administrators in the disaster areas in facilitating the identification and delivery of housing for families and individuals displaced from their homes by Hurricane Rita. PIH program

administrators referenced in Section III of this notice (e.g., PHAs, TDHEs), even if, at times, not specifically described as PIH program administrators located in a disaster area, refer only to administrators located in disaster areas.

A. Statutory Requirements With Built-In Waiver Authority

This section of the notice provides for one additional waiver, in subsection III.A.2, with respect to troubled PHAs that was not listed in the notice published on October 3, 2005. This waiver is available to the PHAs located in Katrina disaster areas as provided in the October 3, 2005, notice.

1. Extension of Deadline for Obligation and Expenditure of Capital Funds. Section 9(j)(2) of the U.S. Housing Act of 1937 (42 U.S.C. 1437g(j)(2)) (1937 Act) authorizes the Secretary to extend the time period for obligation of capital funds by PHAs, as set forth in section 9(j)(1), for such period as the Secretary determines necessary if the Secretary determines that the failure of the agency to obligate assistance in a timely manner is attributable to, among other criteria listed, an event beyond the control of the PHA, or any other reason established by the Secretary by notice published in the **Federal Register**. Pursuant to section 9(j)(1) of the 1937 Act, PHAs are required to obligate capital funds not later than 24 months after the date on which the funds became available, or the date on which the PHA accumulates adequate funds to undertake modernization, substantial rehabilitation, or new construction of units, plus the period of any extension approved under section 9(j)(2). The occurrence of Hurricane Rita was beyond the control of the PHAs located in the disaster areas and caused such massive and widespread destruction and displacement that the obligation deadline under section 9(j)(1) of the 1937 Act is hereby extended pursuant to section 9(j)(2) of the 1937 Act for an additional 12 months for PHAs located in the areas declared a federal disaster area.

In addition, section 9(j)(5)(A) of the 1937 Act requires a PHA to expend capital funds not later than four years after the date on which the funds become available for obligation, plus the period of any extension approved under section 9(j)(2). The expenditure period under section 9(j)(5) is accordingly also extended in the affected areas for 12 months to include the extension approved under section 9(j)(2). The extension of the section 9(j) obligation and extension deadlines made in this notice also apply to the implementing regulation for section 9(j) at 24 CFR 905.120.

2. Extension of Deadlines for Improvement of PHAs Designated Troubled or Substandard (Extension Available for PHAs in Hurricane Rita as well as Hurricane Katrina disaster areas). Sections 6(j)(3)(B)(ii)(I) and (II) of the 1937 Act (42 U.S.C. 1437d(j)(3)(B)(ii)(I) and (II)) and the implementing regulations for these sections at 24 CFR 902.75(d)(1) and (2) require that a PHA designated as troubled improve its performance by 50 percent within one year of such designation, and improve its performance to no longer be designated as troubled within two years of such designation. The implementing regulations also apply these one- and two-year deadlines for improvement to PHAs designated as overall troubled and substandard. The consequences for failure to timely achieve the required improvements could require the appointment of a receiver for the PHA pursuant to section 6(j)(3)(B)(ii)(III) of the 1937 Act and 24 CFR 902.77 of the implementing regulations. The apparent meaning of the provision is that Congress intended that a troubled PHA would have one or two uninterrupted years of continuous operation during which to improve its performance so that it is no longer designated as troubled, before the actions by the Secretary required under section (6)(j)(3)(B)(ii)(III) would be triggered. HUD has determined that because the extraordinary conditions created by Hurricanes Katrina and Rita cited throughout this notice and the notice published on October 3, 2005, were caused by acts outside the control of any PHA, and outside the control of any government or private entity, and because such conditions interrupted the one-or two-year period of contemplated continuous operation of the troubled agency in the disaster areas, the Secretary will extend by 12 months each of the respective periods for improvement under sections 6(j)(3)(B)(ii)(I) and (II) of the 1937 Act and the implementing regulations for these sections at 24 CFR 902.75(d)(1) and (2) for troubled or substandard PHAs in the disaster area that were substantially impacted by the effects of Hurricanes Katrina and Rita. This action will permit the administrators of affected PHAs designated as troubled or substandard to devote their attention to the fullest extent necessary to address the problems created by the disaster.

3. Waiver of ICDBG 50 Percent Downpayment Assistance Limitation for Low- and Moderate-Income Homebuyers. Section 122 of the Housing and Community Development Act of 1974 (42 U.S.C. 5321) authorizes the Secretary to suspend requirements for activities to address the damage in a Presidentially declared disaster area. Section 105(a)(24)(D) (42 U.S.C. 5305) permits a grantee to provide downpayment assistance to low- and moderate-income homebuyers, but limits the assistance to 50 percent of the amount of downpayment the homebuyer must provide. Because of the extraordinary need for housing among low- and moderate-income evacuees, HUD finds good cause to permit downpayment assistance of up to 100 percent for the purchase of homes in the disaster area.

B. Regulatory Requirements

1. 24 CFR 5.216(g)(5) (Disclosure and Verification of Social Security and Employer Identification Numbers). Section 5.216 addresses the disclosure and verification of Social Security Numbers and employer identification numbers of applicants for assistance under certain HUD assisted housing programs. Section 5.216(g) imposes special documentation requirements on applicants, and subsection (g)(5) establishes the time limit for submission of this documentation. The time period required for submission of verification documents is waived for a period of three months in the case of all families and for a period not to exceed 12 months with approval.

2. 24 CFR 5.512(c) (Verification of Eligible Immigration Status; Secondary Verification). Section 5.512 provides the process by which verification of eligible immigration status must be undertaken for families seeking assistance under certain HUD programs. While the declaration of eligibility and this verification process is required by statute and cannot be waived, HUD does have the authority to waive certain deadlines. Section 5.512(d) provides the time frame under which a secondary verification must be requested of Immigration and Customs Enforcement (ICE) by the responsible entity when the primary verification (the automated verification system) is not conclusive of immigration status. The responsible entity must request ICE to undertake a secondary verification within 10 days of receipt of the results of the primary verification, and must provide ICE with all records on the applicant evidencing citizen or eligible immigration status that the applicant has provided to the responsible entity. This notice provides that the time frame under which a secondary verification must be requested is expanded from 10 days of

the date of the results of the primary verification to 90 days from such date.

3. 24 CFR 5.801(c) and 5.801(d)(1) (Uniform Financial Reporting Standards (UFRS); Reporting Due Date). These sections establish uniform financial reporting standards for PHAs and other owners and administrators of HUD-assisted housing. Section 5.801(c) establishes the financial information requirements and § 5.801(d)(1) establishes the filing deadline for financial information and provides that PHAs must submit their unaudited financial information no later than 60 days after the end of their fiscal year. This deadline is changed from 60 days to 180 days after the end of the PHA's fiscal year. In addition, § 5.801(d)(1) requires that PHAs submit their audited financial information no later than nine months after the PHA's fiscal year end. For PHAs with fiscal years ending December 31, 2004, and March 31, 2005, this deadline is changed from nine months to 13 months after the end of the PHA's fiscal year. Although PHAs are still required to submit unaudited and audited financial information pursuant to UFRS, they will not be scored under the Public Housing Assessment System (PHAS), as more fully discussed in Section III.B.4. below.

4. 24 CFR part 902 (Public Housing Assessment System (PHAS)). Part 902 sets out the indicators by which HUD measures the performance of a PHA. These indicators measure a PHA's physical condition, financial condition, management operations, and resident service and satisfaction. For PHAs in the areas declared a federal disaster area beginning with fiscal year end September 30, 2005, and for those with fiscal years ending March 31, 2005, and June 30, 2005, that have not yet received their physical condition inspections for 2005, the PHAS score will be the same as their previous year score. However, PHAs are still required to submit unaudited and audited information in accordance with Section III.B.3.

5. 24 CFR 903.5 (Annual Plan Submission Deadline). Section 5A(h)(2) of the 1937 Act (42 U.S.C. 1437c–1(h)(2)) and 24 CFR 903.5 provide that a PHA Annual Plan must be submitted no later than 75 days before the commencement of a PHA's fiscal year. Each PHA affected may have a different fiscal year and for those PHAs that are approaching this submission deadline, this requirement may be impossible to meet because the PHAs are not operating. Since this requirement is a statutory one and not waivable by HUD without further authority, HUD is seeking legislative relief. However, HUD will accept as a submission a letter from the PHA stating that HUD should consider its existing annual plan to be the plan for the next year or until it submits another annual plan. For Capital Fund activities, PHAs may obligate their Capital Funds for any activity listed in their existing and approved 5-year plan. PHAs should also submit amendments to their 5-year plan to the extent necessary.

6. 24 CFR 905.10(i) (Capital Fund Formula; Limitation of Replacement Housing Funds to New Development). Section 905.10 describes the Capital Fund formula. Section 905.10(i) limits the use of replacement housing funds to the development of new public housing. This section is waived to allow replacement housing funds to be used for two other areas, public housing modernization and homeownership for public housing families, which will help address housing needs as a result of the displacement caused by Hurricane Rita.

7. 24 CFR 941.306 (Maximum Project Cost). Section 941.306 establishes the calculation of maximum project cost and the calculation of the total development cost. In order to facilitate the use of capital funds for repairs and construction for needed housing in the disaster areas, HUD has waived the total development cost (TDC) and housing cost cap limits for all work funded by the Capital Fund and HOPE VI funds until issuance of new TDC levels. Until new TDC levels are issued, PHAs should strive to keep housing costs reasonable given local market conditions.

8. 24 CFR 965.302 (Requirements for Energy Audits). This section establishes the requirement that all PHAs complete an energy audit for each PHA-owned project under management, not less than once every five years. PHAs that are required to conduct or update an audit this year are given an additional 12 months after September 30, 2005, to complete the audit. HUD is relieving PHAs of this administrative burden so that they may focus on the more urgent need to house impacted families.

9. 24 CFR 982.54 (Administrative Plan). This section provides that a PHA must adopt a written administrative plan that establishes local policies for the administration of the Housing Choice Voucher Program in accordance with HUD requirements. In order to allow PHAs to exercise maximum flexibility with program administration as a result of Hurricane Rita, the PHA may temporarily revise the administrative plan to address unique circumstances without PHA Board of Commissioners approval or other authorized PHA official approval if such Board or officials also waive this requirement.

10. 24 CFR 982.206 (Waiting List; Opening and Public Notice). This section requires a PHA to give the public notice that families may apply for tenant-based assistance. The regulation requires a PHA to publish a notice of the opening of the list in a local newspaper of general circulation, and also by minority media and other suitable means. The requirement to publish in a newspaper of general circulation and also by minority media is waived, and a PHA may provide such information on its Web site and at any of its offices and in a voice mail message for any callers that may inquire whether a list is opened.

11. 24 CFR 982.401(d) (Housing Quality Standards: Space Requirements). By regulation, § 982.401 establishes housing quality standards. Section 982.401(d) provides, among other things, the requirement for adequate space for the family. With respect to space, this section provides that each dwelling unit must have at least one bedroom or living/sleeping room for each two persons. The spacing requirements of this section can be waived only if the family understands and consents to a waiver of this provision. Again, as noted from the outset, the waiver of these regulations does not represent a long-term change but rather a temporary suspension of requirements to address emergency needs.

12. 24 CFR 982.503(b) (Waiver of payment standard limit; Establishing Payment Standard Amounts). [Waiver of this Provision Available through Waiver Request.] Section 982.503(b) imposes a cap on the amount a PHA may establish as its payment standard amount at 110 percent of the published fair market rent (FMR). In order to expand the housing available to families displaced by Hurricane Rita, PHAs in disaster areas may establish separate payment standard amounts up to 120 percent of the published FMR. Higher exception rents above 120 percent may be requested through the described expedited waiver process, but must be justified by rental housing data. In all cases, the actual gross rent for the unit leased by the family may not exceed what is charged for comparable unassisted units in the area.

Note that areas whose rental housing markets have been significantly affected by families displaced by Hurricane Rita may request a waiver through the expedited waiver review process, set forth in Section II of this notice, for approval of payment standards in excess of 110 percent of the published FMRs. However, the PHA must

provide information indicating that (1) they have a significant number of displaced families and (2) area rents have increased.

13. 24 CFR 984.303 (Contract of Participation; Family Self-Sufficiency (FSS) Program; Extension of Contract) and 24 CFR 984.105 (Minimum Program Size). Part 984 of HUD's regulations provide the requirements for the Section 8 and Public Housing FSS Program. Section 984.303 sets out the requirements for the contract of participation and § 984.303(d) allows for an extension of the FSS program for a period not to exceed two years. For those families at the end of their initial contract term, the two-year limitation is waived and PHAs may provide an extension for a period not to exceed three years. This additional time period would account for any time lost on the FSS contract as a result of the displacement of families participating in the FSS program. Section 984.105 sets out the requirements for minimum FSS program size. This notice exempts PHAs from the minimum program size (§§ 984.105(a) and (b)) for a period of two years.

14. 24 CFR part 985 (Section 8 Management Assessment Program (SEMAP)). Part 985 sets out the requirements by which section 8 tenant-based assistance programs are assessed. Similar to the action that HUD has taken with respect to the PHAS regulations in 24 CFR part 902, PHAs administering a section 8 tenant-based assistance program are eligible to defer compliance with the SEMAP requirements for a period of 12 months.

15. 24 CFR 990.145 (Dwelling Units with Approved Vacancies). Section 990.145 of the revised Operating Fund Program regulation (79 FR 54984, September 19, 2005) lists the categories of vacant units that are eligible to receive operating subsidy and, therefore, are considered approved vacancies. PHAs that had vacant units during the reporting period that were not ''approved'' vacancies pursuant to § 990.145, but were available for occupancy, may treat those units as approved vacancies if: (1) The PHA anticipates the units will be occupied by families and individuals affected by the disaster during the upcoming funding year, or (2) the PHA is holding the units vacant for families and individuals affected by the disaster.

16. 24 CFR 1000.156 and 1000.158 Indian Housing Block Grant (IHBG) Moderate Design Requirements for Housing Development). The IHBG program regulations at §§ 1000.156 and 1000.158 require that housing developed with IHBG funds must be of moderate design. Under these regulatory sections, IHBG recipients must either adopt written moderate design standards or comply with the TDC limits issued by HUD. In recognition of the higher development costs in communities affected by Hurricane Rita, and to facilitate the development of housing for families in these communities, these moderate design requirements are waived for IHBG recipients until issuance of new TDC levels. Until new TDC levels are issued, IHBG recipients should strive to keep housing costs reasonable given local market conditions.

17. 24 CFR 1000.214 (Indian Housing Plan (IHP) Submission Deadline). To receive an IHBG formula allocation, an Indian tribe or its TDHE must annually submit an IHP to HUD describing the affordable housing activities the Indian tribe or TDHE will undertake. Section 1000.214 requires that the IHP must be submitted to HUD no later than July 1 of each year. This section is waived to permit tribes and TDHEs to undertake affordable housing activities on behalf of families displaced by Hurricane Rita, although these activities may not have been identified in the IHP originally submitted by the tribe or TDHE.

18. 24 CFR 1003.400(c) and Section I.C. of FY 2005 Indian Community Development Block Grants (ICDBG) Program Notice of Funding Availability (NOFA) (Grant Ceilings for ICDBG Imminent Threat Applications). The ICDBG regulations at § 1003.400(c) provide that HUD will establish grant ceilings for imminent threat applications. On March 21, 2005 (70 FR 13655), HUD published its FY 2005 ICDBG NOFA as part of HUD's FY2005 SuperNOFA. Section I.C. of the FY2005 ICDBG NOFA specifies that the grant ceiling for ICDBG imminent threat requests for FY2005 is $425,000. This grant ceiling is waived to permit applicants to request imminent threat funding in excess of $425,000 if necessary to address disaster-related needs in their communities.

19. 24 CFR 1003.401 and Section I.C. of FY 2005 ICDBG NOFA (Application Requirements for ICDBG Imminent Threat Funds). The ICDBG regulations at section 1003.401 provide that, in response to applications for assistance, HUD may make ICDBG funds available to applicants to address imminent threats to health and safety. The regulation further provides that applications must contain the information specified in the annual ICDBG NOFA. The required information that must be contained for imminent threat applications for FY 2005 is located in Section I.C. of the FY 2005 ICDBG NOFA. These application requirements are waived to permit Indian tribes located in areas affected by Hurricane Rita to more expeditiously request and receive ICDBG imminent threat funds. Applicants located in these areas are still required to submit a request for imminent threat assistance to HUD in accordance with section 1003.401 and the FY 2005 ICDBG NOFA, but it is no longer necessary for the request to contain the information listed in Section I.C. of the NOFA.

20. 24 CFR 1003.604 (ICDBG Citizen Participation Requirements). The ICDBG regulations at § 1003.604 require applicants to consult with residents prior to submitting their funding applications. The consultation requirements have the potential to delay the ability of ICDBG recipients to address urgent housing, health, and safety needs of persons displaced by Hurricane Rita. Accordingly, this section is waived to permit eligible ICDBG applicants to address disaster-related needs without the need for prior resident consultation.

Dated: October 25, 2005.

Roy A. Bernardi,

Deputy Secretary.

[FR Doc. 05–21682 Filed 10–31–05; 8:45 am]

BILLING CODE 4210–33–P

Federal Register

Tuesday,
November 1, 2005

Part VI

Department of Housing and Urban Development

Universities Rebuilding America Partnerships—Community Design Program; Notice

DEPARTMENT OF HOUSING AND URBAN DEVELOPMENT

[Docket No. FR–5023–N–01]

Universities Rebuilding America Partnerships—Community Design Program

AGENCY: Office of Policy Development and Research, HUD.

ACTION: Notice of Funding Availability (NOFA).

Overview Information

A. Federal Agency Name: Department of Housing and Urban Development, Office of Policy Development and Research, Office of University Partnerships.

B. Funding Opportunity Title: Universities Rebuilding America Partnerships—Community Design program.

C. Announcement Type: Initial announcement.

D. Funding Opportunity Numbers: The **Federal Register** number for this Notice of Funding Availability (NOFA) is FR–5023–N–01. The OMB Approval number for this program is pending.

E. Catalog of Federal Domestic Assistance (CFDA) Number: The CFDA number for this program has not yet been assigned.

F. Dates: The application submission date is December 1, 2005.

G. Additional Overview Content Information:

1. *Purpose of the Program:* The Universities Rebuilding America Partnerships (URAP)—Community Design program provides funds to schools of architecture, urban planning and design, or construction at accredited two- and four-year colleges and universities to establish and operate partnerships with and for communities affected by Hurricanes Katrina or Rita (or both).

2. *Award Information:* Approximately $2 million in recaptured Urban Development Action Grant (UDAG) program funds will be made available for this program. The maximum amount an applicant can request for award is $300,000 for a two-year (24-month) grant performance period.

3. *Eligible Applicants:* Public or private nonprofit institutions of higher education granting two- or four-year degrees in architecture, urban planning and design, or construction that are accredited by a national or regional accrediting agency and recognized by the U.S. Department of Education are eligible to apply for funding under the program. A consortium of eligible institutions may also apply for funding under this program, as long as one institution is designated the lead applicant. Institutions that were previous Office of University Partnerships (OUP) grant recipients are eligible to apply for these funds.

Full Text of Announcement

I. Funding Opportunity Description

A. Purpose

The purpose of the Universities Rebuilding America Partnerships (URAP)—Community Design program is to provide funds to schools of architecture, urban planning and design, or construction at accredited two- and four-year colleges and universities to establish and operate partnerships with and for communities affected by Hurricanes Katrina or Rita (or both) to:

(1) Develop long-range neighborhood designs and plans for local communities that address both reconstruction and future growth needs within a municipality or established neighborhood(s) within a larger municipality; or

(2) Develop architectural design assessment and rehabilitation/reconstruction planning for housing and community amenities damaged or eliminated by the hurricanes to address resettlement needs.

B. Authority

This program is authorized under Section 107(b)(5) of the Housing and Community Development Act of 1974 and its implementing regulations found at 24 CFR 570.411.

II. Award Information

A. Award Amount

Approximately $2 million in recaptured Urban Development Action Grant (UDAG) funds will be made available for this program. The maximum amount an applicant can request for award is $300,000 for a two-year (24-month) grant performance period. HUD will not make awards of less than $100,000.

B. Additional Information

Applicants may apply for only one grant to address one of the categories described in III.C.1.

III. Eligibility Information

A. Eligible Applicants

Public or private nonprofit institutions of higher education granting two- and four-year degrees in architecture, urban planning and design, or construction that are accredited by a national or regional accrediting agency and recognized by the U.S. Department of Education are eligible to apply for funding under this program. A consortium of eligible institutions may also apply for funding under this program, as long as one institution is designated the lead applicant. Institutions that were previous OUP grant recipients are eligible to apply for these funds.

B. Cost Sharing or Matching

None required.

C. Other

All activities must be primarily for the benefit of low- and moderate-income individuals (as described at 24 CFR 570.208).

1. Eligible Activities

a. Neighborhood Design and Planning for Reconstruction Activities. Eligible activities in this category include, but are not limited to, the following:

(1) Making use of visual simulation, Geographic Information Systems, and other computer modeling tools in the planning process.

(2) Preparing computer models that can simulate growth, market, and investment demands as a tool for community planning and development decision-making.

(3) Partnering with economists and market analysts to determine market demands for resettlement and growth, and their effect on housing and other needs.

(4) Conducting symposia to do outreach with and to educate local officials and residents.

(5) Working with legal and regulatory authorities to resolve legal and regulatory issues that might limit housing resettlement, development, or growth options for the area.

(6) Meeting and entering into agreements with local officials and community groups to establish priorities for plan implementation.

(7) Conducting focus groups, design charettes or other decision-making activities that involve communities in providing input and responses to proposed designs and plans.

b. Housing Design and Planning for Reconstruction Activities. Eligible activities for this category of URAP awards include, but are not limited to, the following:

(1) Researching and identifying housing rehabilitation, resettlement, reconstruction, and construction needs for one or more target communities.

(2) Identifying the range of housing markets within a community utilizing both pre- and post-Hurricane demographic trends, including market needs of different income groups, as

well as diverse populations such as the elderly, persons with disabilities, younger families with children, empty nesters, racial and ethnic minorities, and persons who are homeless.

(3) Identifying relevant technologies that show promise for improving the durability, affordability, and accessibility of housing, including but not limited to advanced technologies and building systems that have been identified through such sources as the PATH program (Partnership for Advancing Technology in Housing), Energy Star and other sources (See *www. pathnet.org* for further information on PATH's technology inventory, and *www.energystar.gov* for information on Energy Star).

(4) Developing housing rehabilitation strategies and housing reconstruction designs, as well as construction plans that demonstrate innovative technologies, energy efficiency, accessibility, green building techniques, and/or other features of innovative design.

(5) Preparing schematic designs of these houses for review by a panel of construction and design experts, such as builders, developers, and local architects.

(6) Preparing cost analyses of these rehabilitation, reconstruction, and construction designs that illustrate that they are affordable and suitable for one or more market segments in the local community.

(7) Conducting extensive focus groups, design charettes, or other decision-making activities that engage residents and community leaders in providing input and responses to proposed designs and plans. This may be done in a method that is sensitive to the potential geographic dispersal of community residents.

(8) Preparing final designs and construction specifications, including, where appropriate, the use of industrialized housing systems.

(9) Identifying the site or sites for rehabilitation, reconstruction, and construction for submission to local officials and potential non-profit and private developers and builders.

(10) Working with local HUD offices, other government agencies, and private institutions (such as private foundations and lending institutions), nonprofit and private sector developers to identify sources of financing for rehabilitation and reconstruction of houses and other community structures.

(11) Identifying regulatory barriers, including zoning restrictions, building codes, and permitting or inspection standards, which inhibit the use of new technologies or construction methods; assisting communities to eliminate or reduce excessive, unnecessary, or duplicative regulations; or to eliminate processes or policies that restrict the development, construction, or rehabilitation, or add to the cost of affordable housing.

(12) Implementing an information dissemination program for builders, investors, and civic leaders that could include exhibits of completed rehabilitation and reconstruction plans and designs in suitable community locations, along with symposia, community workshops, or other activities.

(13) Providing continuing architectural services during the construction of the completed design by a nonprofit or for-profit developer.

c. Both Grant Categories. In addition to eligible activities in each grant category described above, the following are eligible activities for both grant categories:

(1) Incorporating relevant housing design and planning topics in the curriculum of architecture and planning schools, by offering design and planning courses and studios on relevant topics, such as affordable housing, housing economics, real estate development, accessible design, energy efficient housing, and/or metropolitan growth, as well as extensive service learning components in existing coursework.

(2) Leases for local office space in which to house the program, under the following conditions:

(a) The lease must be for existing facilities not requiring rehabilitation or construction;

(b) No repairs or renovations of the property may be undertaken with program funds; and

(c) Properties in the Coastal Barrier Resource System designated under the Coastal Barrier Resources Act (16 U.S.C. 3501) cannot be leased with Federal funds.

2. Audit Requirements

Applicants must ensure that their most current A–133 audit is on file at the Federal Audit Clearinghouse. (Applicants are not required to submit a copy of the audit with the application.) Grantees that expend $500,000 or more in Federal financial assistance in a single year (this can be program year or fiscal year) must be audited in accordance with OMB requirements as established in 24 CFR part 84. Additional information regarding this requirement can be accessed at the following Web site: *http://harvester.census.gov/sac.*

3. Threshold Requirements

All applicants must comply with the threshold requirements as defined in the General Section of the FY2005 SuperNOFA (70 FR 13576, March 21, 2005) and the requirements listed below to be evaluated, rated, and ranked. Applications that do not meet these requirements will be considered ineligible for funding and will be disqualified:

a. An applicant must meet the eligibility requirements as defined in Section III.A. Eligible Applicants.

b. Only *one* application can be submitted per institution. If multiple applications are submitted, all will be disqualified.

c. An applicant must receive a minimum score of 75 points to be considered for funding.

d. An applicant must have a DUNS number to receive HUD grant funds. (The General Section of the FY 2005 SuperNOFA provides information regarding the DUNS requirement.)

e. Applicants may be part of only one consortium or submit only one application; otherwise, all of the applicant's applications will be disqualified. HUD will hold the applicant responsible for ensuring that neither the applicant nor any part of their institution, including specific faculty, participates in more than one application.

4. Program Requirements

In addition to the requirements listed in Section III.C of the General Section, applicants must meet the following program requirements specific to the URAP Community Design Program awards:

a. Employ the research and outreach resources of the institution of higher education to solve specific problems identified by the communities affected by Hurricanes Katrina or Rita (or both) and served by the program funds;

b. Establish activities in areas identified in the application as the communities to be served;

c. Coordinate activities in communities to be served by the program funds;

d. Act as a clearinghouse for dissemination of information;

e. Develop instructional materials and provide training for local community leaders, when appropriate; and

f. Exchange information with other URAP-funded efforts.

g. Applicants must have an identified partner within the communities affected by Hurricanes Katrina or Rita (or both), neighborhood, municipality or metropolitan area. Applicants must

obtain a written agreement with the local entity to receive funding under this program. Examples of potential partners are State and local governments; a quasi-government agency such as a development corporation; public housing authority; local or national nonprofit organizations, if national organization must have a local affiliate; financial institutions; foundations; faith-based organizations, if national must have a local affiliate; institutions of higher education; and other community-based organizations.

IV. Application and Submission Information

A. Addresses To Request Application Package

Applicants may submit either a paper or electronic application. When submitting an electronic application, applicants may download the instructions to the application found on the Grants.gov Web site at *http://www.Grants.gov./Apply.* The instructions contain the General Section and Program Section of the published NOFA, as well as forms that you must complete and attach as a ZIP file to your application submission. If you have difficulty accessing the information, you may call the Grants.gov Support Desk toll-free at (800) 518–GRANTS or e-mail your questions to *Support@Grants.gov.* The Support Desk staff will assist you in accessing the information. Please remember that you must complete the five-step registration process in order to submit an application utilizing Grants.gov. Your registration allows you to electronically sign the application and enables Grants.gov to authenticate that the person signing the application has the legal authority to submit the application on behalf of the applicant. Please see the General Section for information regarding the registration process or ask for registration information from the Grants.gov Support Desk. Please be aware that the registration process is a separate process from requesting e-mail notification of funding opportunities or downloading the application and should be done as soon as you download the application from the Grants.gov Web site. If you are not sure if you are already registered, the Grants.gov Support Desk can verify that for you.

A paper application package must be submitted to the following address: University Partnerships Clearinghouse, c/o Danya International, 8737 Colesville Road, Suite 1200, Silver Spring, MD 20910. When submitting an application package, please include the following information on the outside of the envelope:

a. Office of University Partnerships;

b. Universities Rebuilding America Partnerships (URAP)—Community Design program (CDP);

c. Applicant's name and mailing address (including zip code); and

d. Applicant's telephone number (including area code).

A complete paper application package must include an original signed application, three copies, one computer disk of the application (in Word 6.0 or higher), and required forms.

B. Content and Form of Application Submission

1. Forms

The following forms are required for submission. Copies of these forms are included in Appendix A of the General Section. The electronic version of the NOFA contains all forms required for submission.

a. Application for Federal Assistance (SF–424);

b. Survey on Ensuring Equal Opportunity for Applicants (SF–424 Supplement);

c. Grant Application Detailed Budget (HUD–424–CB);

d. Disclosure of Lobbying Activities (SF–LLL);

e. Americas' Affordable Communities Initiative (HUD–27300);

f. Applicant/Recipient Disclosure/Update Report (HUD–2880);

g. Program Logic Model (HUD–96010); and

h. Facsmille Transmittal Cover Page (HUD–96011). This form must be used as part of the electronic application to transmit third-party documents and other information as described in the General Section as part of your electronic application submittal (if applicable). Applicants are advised to download the application package and complete the SF–424 first, as it will pre-populate the Transmittal Cover page. The Transmittal Cover page will contain a unique identifier embedded in the page that will help HUD associate your faxed materials to your application. Please download the cover page and then make multiple copies to provide to any of the entities responsible for submitting faxed materials to HUD on your behalf. Please be sure to use the Facsimile Transmittal Cover Page as the cover page to any documents faxed in response to this NOFA. HUD will not accept entire applications submitted by facsimile.

2. Certifications and Assurances

Please read the General Section for detailed information on all Certifications and Assurances. All applications submitted through Grants.gov constitute an acknowledgement and agreement to all required certifications and assurances. Please include in your application each item listed below. Applicants submitting paper copy applications should submit the application in the following order:

a. *SF–424, Application for Federal Assistance.* Please remember the following:

(1) Include the name, title, address, telephone number, facsimile number, and e-mail address of the designated contact. This is the person who will receive the reviewers' comments; therefore, please ensure the accuracy of the information;

(2) The Employer Identification/Tax ID;

(3) The DUNS number;

(4) The Catalog of Federal Domestic Assistance number for this program has not yet been assigned;

(5) The project's proposed start date and completion date. For the purpose of this application, the program start date should be January 1, 2006; and

(6) The signature of the Authorized Organization Representative (AOR):

(i) *Applicants submitting electronic applications.* The signature of the AOR is the individual who has been authenticated by the credential provider to submit applications via Grants.gov. The AOR must be able to make a binding legal agreement with HUD. See the General Section for instructions and requirements for registration with Grants.gov.

(ii) *Applicants submitting paper applications.* The signature of the Chief Executive Officer of the institution or his/her assigned designee is the individual who has the authority to make a binding legal agreement with HUD.

b. *Application Checklist.* Applicants should use the checklist to ensure that they have all the elements required in their application submission. Applicants submitting an electronic application do not have to submit the checklist in their application. The checklist can be found in the NOFA (See Attachment A).

c. *Abstract.* Applicants must include no more than a one-page summary of the proposed project. Please include the following:

(1) A clear description of the proposed project activities, the designated disaster area, and target population that will be assisted;

(2) A statement that the institution is an eligible institution because it is a two- or four-year fully accredited

institution; the name of the accrediting agency; and an assurance that the accrediting agency is recognized by the U.S. Department of Education;

(3) The designated contact person, including phone number, facsimile number, and e-mail address (this is the person who will receive the reviewers' comments; therefore, please ensure the accuracy of the information);

(4) University's name, department, mailing address, telephone number, facsimile number, and e-mail address; and

(5) The principal investigator, if different from the designated contact person, for the project, including phone number, facsimile number, and e-mail address.

d. *Narrative statement addressing the Rating Factors.* HUD will use the narrative response to the ''Rating Factors'' to evaluate, rate, and rank applications. The narrative statement is the main source of information. Applicants are advised to review each factor carefully for program-specific requirements. The response to each factor should be concise and contain only information relevant to the factor, but detailed enough to address each factor fully. Focus on how well the proposal responds to each of the factors. In factors where there are subfactors, each subfactor must be presented separately, with the short title of the subfactor presented. Make sure to address each subfactor and provide sufficient information about every element of the subfactor. The narrative section of an application must not exceed 15 pages, double spaced, in a Times Roman 12 point font (excluding forms, budget narrative, commitment letters, memoranda of understanding, agreements, and abstracts). Each page of the narrative must include the applicant's name and must be numbered. Please note that although submitting pages in excess of the page limit will not disqualify an applicant, HUD will not consider the information on any excess pages. This exclusion may result in a lower score or failure to meet a threshold requirement, resulting in ineligibility.

e. *Budget.* The budget submission must include the following form:

(1) *HUD–424–CB, ''Grant Application Detailed Budget.''* This budget form shows the total budget by year and by line item for the program activities to be carried out with the proposed HUD grant. Each year of the program should be presented separately. Applicants must also submit this form to reflect the total cost for the entire grant performance period (Grand Total).

Make sure that the amount shown on the SF–424, the HUD–424–CB, and all other required program forms is consistent and the budget totals are correct. Remember to check addition in totaling the categories on all forms so that all items are included in the total. If there is an inconsistency between any of the budget forms required, the HUD–424–CB will be used. All budget forms must be fully completed. If an application is selected for award, the applicant may be required to provide greater specificity to the budget during grant agreement negotiations.

(2) *Budget Justification.* A narrative must be submitted that explains how the applicant arrived at the cost estimates for any line item, including match items, over $5,000. The proposed cost estimates should be both reasonable for the work to be performed and consistent with rates established for the level of expertise required to perform the work proposed. When an applicant proposes to use a consultant, the applicant must indicate whether there is a formal agreement or written procurement policy. For each consultant, please provide the name, if known, hourly or daily rate, and the estimated time on the project. For equipment, applicants must provide a list by type and cost for each item and explain how it will be used.

(3) *Indirect costs.* Indirect costs, if applicable, are allowable based on an established approved indirect cost rate. Applicants should include a copy of their indirect cost rate agreement with their application. Please refer to Section IV.F of the General Section for instructions on how these documents are to be submitted to HUD using the electronic submission process. Applicants who are selected for funding that do not have an approved indirect cost rate agreement (established by the appropriate Federal agency, Certified Public Accountant, or auditor) will be required to submit an indirect cost proposal to the cognizant Federal agency to establish a rate. In such cases, HUD will issue an award with a provisional rate and enter into an agreement to have one established.

f. *Appendix.* All letters of commitment and other required forms should be placed in this section. Applicants applying as a Consortium must include a memorandum of understanding or agreement signed by each of Chief Executive Officers of the institutions involved. The document must describe all the members of the Consortium, outline each institution's roles and responsibilities, and describe how much funding each institution will receive from the grant. For applicants submitting electronic applications, please refer to Section IV.F of the General Section for instructions on how third-party documents are to be submitted to HUD using the electronic submission process. An applicant SHOULD NOT submit general support letters or resumes or other back-up materials. If this information is included, it will not be considered during the review process. The additional items will also slow the transmission of your application.

C. Submission Dates and Times

An electronic application package must be received electronically by the Grants.gov portal no later than 11:59:59 p.m. Eastern time on or before December 1, 2005. Applications may be submitted in advance of the submission date. Electronic faxes using the Facsimile Transmittal (Form HUD–96011) cover sheet contained in the electronic application may be submitted prior to the application submission date and must be received no later than 11:59:59 p.m. Eastern time on the application submission date. Please see Section IV.F of the General Section for electronic application submission instructions and timely receipt requirements.

A paper application package must be postmarked on or before 12 midnight on the application due date and received by the Office of University Partnerships Clearinghouse within three (3) calendar days of the application due date. Applications should be sent using DHL, Falcon Carrier, Federal Express (FedEx), United Parcel Services (UPS), or the United States Postal Services (USPS), as access to the clearinghouse by other delivery services is not guaranteed. All applicants must obtain and save a delivery service receipt or certificate of mailing to indicate the application was submitted for delivery on or before the application due date. Hand deliveries will not be accepted.

D. Intergovernmental Review

This program is excluded from an Intergovernmental Review.

E. Funding Restrictions

1. Activities such as, but not limited to, the following are ineligible for funding:

a. Any type of capital costs for construction, rehabilitation, or other physical development.

b. Routine operations and day-to-day administration of institutions of higher education, local governments, or neighborhood groups.

c. Payment of court fines, judgments or fees imposed as a result of a court case, or a settlement of a court case.

2. Funding may only be provided to applicants that meet the standards for eligible applicants in Section III.A.

F. Other Submission Requirements

1. Application Submission and Receipt Procedure. Please read the General Section carefully and completely for the submission and receipt procedures for all applications because failure to comply may disqualify your application.

2. Paper applications will be accepted.

V. Application Review Information

A. Criteria

1. Rating Factor 1: Capacity of the Applicant and Relevant Organizational Experience (25 Points)

This factor addresses the extent to which an applicant has the organizational resources necessary to successfully implement the proposed activities in a timely manner. In rating this factor, HUD will consider the extent to which the proposal demonstrates the knowledge and experience of the overall proposed project director and staff, including the day-to-day program manager, consultants, and contractors in planning and managing the kind of program for which funding is being requested. Experience will be judged in terms of recent, relevant, and successful knowledge and skills of the staff to undertake eligible program activities. HUD will consider experience within the last 5 years to be recent; experience pertaining to the specific activities being proposed to be relevant; and experience producing specific accomplishments to be successful.

Applicants should include information on the commitment of project staff time to the project. In addition, applicants must provide position titles and qualifications of persons to carry out the proposed activities, including academic background, training, and relevant publications of project staff.

Applicants must provide information that reflects whether they have sufficient personnel, if they will be able to retain qualified experts or professionals to begin the proposed project immediately, and to perform proposed activities in a timely and effective fashion.

Applicants may submit attachments totaling no more than 15 pages over and above the narrative statement that consists of copies of plans, drawings, photographs, award announcements, or journal articles that illustrate previous projects, both for project staff and/or representative studio design projects completed by students that illustrate the type of design and plans anticipated to be carried out as part of the proposed activities. Photographs must be submitted as a JPEG file. Drawings, plans, or articles must be submitted as PDF files. HUD is only able to read files that are formatted in Microsoft Office, Word, and Excel.

2. Rating Factor 2: Need/Extent of the Problem (10 Points)

This factor addresses the extent to which there is a need for the activities the applicant proposes to undertake in response to this NOFA. An indication of urgency of meeting the need to participate in the target area is not necessary, as this has already been identified for the entire region impacted by Hurricane Katrina or Rita. On this factor, the proposal will be evaluated on the extent to which it documents an assessment of the need for the proposed activities.

3. Rating Factor 3: Soundness of Approach (55 Points)

This factor addresses the quality and cost-effectiveness of the proposed work plan. There must be a clear relationship among the proposed activities, community needs, and the purpose of the funding to receive points for this factor. The factor will be evaluated based on the extent to which the proposed work plan will:

a. (25 Points) Specific Services and/or Activities. The work plan must identify the services or activities, major tasks, milestones, and timelines for the activity category proposed. In reviewing this subfactor, HUD will consider the extent to which the applicant:

(1) Identifies which activity category as discussed in III.C.1 of this NOFA they will focus on;

(2) Describes each proposed activity to successfully implement and complete the proposed activities;

(3) Identifies tasks and time frames necessary to accomplish the proposed activities;

(4) Describes the measurable objectives to be accomplished, including short- and long-term objectives to be achieved as a result of the proposed activities; the tangible and measurable impact the activities will have on the community in the target hurricane disaster area or a population in particular; and the relationship of the proposed activities to other ongoing or proposed efforts to improve the economic, social, or living environment in the impact area; and

(5) Identifies who will be responsible for the proposed activities and how the architecture, urban planning and design, or construction school will be involved (where appropriate in partnership with other disciplines, departments, and administrative offices).

b. (5 Points) Involving the communities to be served in a partnership for the planning and implementation of the proposed activities. In reviewing this subfactor, HUD will look at the extent to which the applicant:

(1) Involves local citizens directly in the decision-making and design processes;

(2) Identifies a partner within the Hurricane-impacted community, neighborhood, municipality, or metropolitan area. Applicants must obtain a written agreement with the local entity to receive funding under this program. Examples of potential partners are state and local governments; a quasi-government agency such as a development corporation; public housing authority; local or national nonprofit organizations, if national must have a local affiliate; financial institutions; foundations; faith-based, if national must have a local affiliate; institutions of higher education; and other community-based organizations.

c. (6 Points) Helping to solve or to address an urgent problem as identified in Rating Factor 2 and will achieve the purposes of the proposed activities. In reviewing this subfactor, HUD will look at the extent to which the activities proposed are responsive to pressing and urgent needs, as identified in the documents described in Rating Factor 2.

d. (4 Points) Work will yield innovative strategies or ''best practices'' that can be replicated and disseminated to other organizations, including nonprofit organizations, state and local governments and other communities impacted by the hurricanes. In reviewing this subfactor, HUD will assess the applicant's demonstrated ability to disseminate results to other universities and communities.

e. (5 Points) Results in supporting the planning and design functions and activities of the institution. In rating this subfactor, HUD will evaluate the extent to which the URAP activities will benefit students (because they are part of the professional training programs at the institution rather than just volunteer activities) and support the institution's commitment to faculty and staff to continue to work in URAP communities and the institution's local communities and neighborhoods or replicate successes in other neighborhoods.

f. (5 points) Involvement of students in course work. In rating this subfactor, HUD will look at the extent to which

URAP activities are incorporated or addressed in student course work, including design and planning studios. This should include students' developing an understanding of design and planning issues associated with the project. Please describe the proposed relationship between student work and the final plans or housing designs.

g. (5 Points) Commitment to the effort. This subfactor addresses the applicant's ability to identify/secure additional resources that will aid in project implementation. HUD is looking for proposed plans to be adopted and resources allocated from the community to support the plan/development.

Governmental entities, public or private nonprofit organizations, for-profit private organizations, or other entities willing to establish partnerships with the institution may provide resources. In order to receive points under this subfactor, applicants must submit letters of commitment that outline the services/resources committed, how the services/resources will be utilized, and the involvement of the entity in the program.

4. Rating Factor 4: Achieving Results and Program Evaluation (10 Points)

This factor reflects HUD's goal to embrace high standards of management and accountability. It measures the applicant's commitment to assess their performance to achieve the program's proposed objectives and goals. Applicants are required to develop an effective, quantifiable, outcome-oriented evaluation plan for measuring performance and determining that objectives and goals have been achieved. The Logic Model is a summary of the narrative statements presented in Factors 1–3. Therefore, the information submitted on the Logic Model should be consistent with the information contained in the narrative statements, but does not have to be as detailed.

''Outcomes'' are benefits accruing to institutions of higher education and/or communities during or after participation in the URAP—Community Design program. Applicants must clearly identify the outcomes to be measured and achieved. Examples of outcomes are increased business start-up in the target community by a certain percentage, or increased family financial stability (*e.g.*, increased assets to families and communities through the development of incubators).

In addition, applicants must establish interim benchmarks and outputs that lead to the ultimate achievement of outcomes. ''Outputs'' are the direct products of the program's activities. Examples of outputs are the number of new businesses developed, the number of students involved in service learning activities, and the number of new courses an institution developed that focus on community outreach activities, the number of newly formed partnerships that aid in community capacity building. Outputs should produce outcomes for the program. At a minimum, an applicant must address the following activities in the evaluation plan:

a. Specific time-phased short- and long-term measurable outputs to be accomplished.

b. Measurable outcomes the grant will have on the community in general and the target area or population.

c. The impact the grant will have on the long-term commitment of the university to the faculty and students to provide opportunities to continue this type of work.

d. The impact the grant will have on assisting the university in obtaining additional resources to continue this type of work at the end of the grant performance period.

This information must be placed under this section on a HUD–96010 Program Outcome Logic Model form. Applicants may submit as many copies of this form as required. It will not be included in the page count requirement. A narrative is not required. However, if a narrative is provided, those pages will be included in the page count. Additional information on this form and how to use it can be found in the General Section.

B. Review and Selection Process

1. Application Selection Process

Two types of reviews will be conducted:

a. A threshold review to determine an applicant's basic eligibility; and

b. A technical review for all applications that pass the threshold review to rate and rank the application based on the ''Rating Factors'' listed in Section V.A. Only those applications that pass the threshold review will receive a technical review and be rated and ranked.

2. Rating Panels

To review and rate applications, HUD may establish panels which may include experts or consultants not currently employed by HUD.

3. Ranking

HUD will fund applications in rank order until all available program funds are awarded. In order to be funded, an applicant must receive a minimum score of 75 points out of a possible 100 points. HUD reserves the right to reduce the amount of funding requested in order to fund as many highly ranked applications as possible. Additionally, if funds remain after funding the highest ranked applications, HUD may fund part of the next highest-ranking application. If an applicant turns down the award offer, HUD will make the same determination for the next highest-ranking application.

4. Correction to Deficient Applications

The General Section provides the procedures for correction to deficient applications.

VI. Award Administration Information

A. Award Notice

After all selections have been made, HUD will notify all winning applications in writing. HUD may require winning applicants to participate in additional negotiations before receiving an official award. For further discussion on this matter, please refer to the General Section.

B. Administrative and National Policy Requirements

Applicants may meet any of the National Policy Requirements listed in Section VI.B of the General Section.

1. Debriefing

The General Section provides the procedures for requesting a debriefing. All requests for debriefings must be made in writing and submitted ninety (90) days after the awards have been announced to: Kinnard Wright, Office of University Partnerships, Robert C. Weaver Federal Building, 451 Seventh Street, SW., Room 8106, Washington, DC 20410–6000. Applicants may also write to Mr. Wright via e-mail at *Kinnard_D._Wright@hud.gov.*

2. Administrative

Grants awarded under this NOFA will be governed by the provisions of 24 CFR part 84 (Grants and Agreements with Institutions of Higher Education, Hospitals and Other Non-Profit Organizations), A–21 (Cost Principles for Educational Institutions), and A–133 (Audits of States, Local Governments, and Non-Profit Organizations). Applicants can access the OMB circulars at the White House Web site at: *http://www.whitehouse.gov/omb/circulars/index.html.*

3. OMB Circulars and Government-Wide Regulations Applicable to Financial Assistance Programs

The General Section provides further discussion.

4. Code of Conduct

See the General Section for further discussion.

5. Recovered Materials

The General Section provides further discussion.

6. Environmental Requirements

In accordance with 24 CFR 50.19(b) of HUD regulations, activities assisted under this NOFA are categorically excluded from the requirements of the National Environmental Policy Act and are not subject to environmental review under related laws and authorities.

C. Reporting

All grant recipients under this NOFA are required to submit semi-annual progress reports. The progress reports shall consist of two components, a narrative that must reflect the activities undertaken during the reporting period and a financial report, as well as a cumulative summary of costs incurred during the reporting period.

For each reporting period, as part of the required report to HUD, grant recipients must include a completed Logic Model (HUD–96010), which identifies output and outcome achievements.

VII. Agency Contacts

Applicants may contact Kinnard Wright at (202) 708–3061, extension 7495, or Susan Brunson at (202) 708–3061, extension 3852. Persons with speech or hearing impairments may call the Federal Information Relay Service (TTY) at (800) 877–8339. Except for the ''800'' number, these numbers are not toll-free. Applicants may also reach Mr. Wright via e-mail at *Kinnard_D._Wright@hud.gov,* and/or Ms. Brunson at *Susan_S._Brunson@hud.gov.*

VIII. Other Information

A. Paperwork Reduction Act

The information collection requirements contained in this document have been approved by the Office of Management and Budget (OMB) under the Paperwork Reduction Act of 1995 (44 U.S.C. 3501–3520) and assigned OMB control number is pending. In accordance with the Paperwork Reduction Act, HUD may not conduct or sponsor, and a person is not required to respond to, a collection of information unless the collection displays a currently valid OMB control number. Public reporting burden for the collection of information is estimated to average 144 hours per annum per respondent for the application and grant administration. This includes the time for collecting, reviewing, and reporting the data for the application, quarterly, semi-annual, and final reports. The information will be used for grantee selection and monitoring the administration of funds. Response to this request for information is required in order to receive the benefits to be derived.

B. Modification of the Definition of Institution of Higher Learning

For this URAP—Community Design program NOFA, HUD is modifying the definition of Institution of Higher Learning provided for in 24 CFR 570.411(b). Although HUD generally publishes regulatory changes for comment before issuing the regulation for effect, HUD may issue a regulatory change when good cause allows the Department to omit advance notice and comment, in accordance with HUD's rules at 24 CFR part 10. The good cause requirement is satisfied when prior public procedure is ''impractical, unnecessary, or contrary to the public interest'' (see 24 CFR 10.1). Because of the widespread devastation caused by Hurricanes Katrina and Rita and the urgency to provide assistance to persons affected by these natural disasters, HUD has determined that it would be contrary to the public interest to delay the effectiveness of this regulatory change in order to solicit prior public comment. Therefore, for grants awarded pursuant to this NOFA, colleges or universities granting 2-year degrees and accredited by a national or regional accrediting agency recognized by the U.S. Department of Education will be considered eligible applicants. The modification is limited to grants awarded under this NOFA and does not extend to any other program or grant.

C. Environmental Impacts

This NOFA provides funding under, and does not alter the environmental requirements of, 24 CFR 570.411. Accordingly, under 24 CFR 50.19(c)(5), this NOFA is categorically excluded from environmental review under the National Environmental Policy Act of 1969 (42 U.S.C. 4321) (NEPA). Activities under this NOFA are subject to the environmental review provisions set out at 24 CFR 570.411(n). However, as indicated in Sec. VI of this NOFA, activities assisted under this NOFA are categorically excluded from the requirements of NEPA and are not subject to environmental review under related laws and authorities.

Dated: October 24, 2005.

Darlene F. Williams,

Assistant Secretary for Policy Development and Research.

BILLING CODE 4210–62–P

Attachment A--Application Checklist
Universities Rebuilding America Partnerships: Community Design Program

This checklist identifies application submission requirements. Applicants are requested to use this checklist when preparing an application to ensure submission of all required elements. Applicants submitting an electronic application do not have to submit the checklist. Applicants that submit paper applications must include a copy of the checklist in their application.

Check of to ensure these items have been included in the application:

_____ SF-HUD 424 "Application For Federal Assistance"

_____ Application Checklist

_____ Abstract (must include no more than a one page summary of the proposed project)

Indicate the page number where each of the Factors are located:
Narrative Statement Addressing the Factors for Award. The narrative including tables and maps must not exceed 15 pages, (excluding attachments under Factor 1, forms, abstracts, budget narrative, assurances, commitment letters, memorandum of understanding, and agreements) double-spaced on one side of the paper, with on-inch margins (from top, bottom, left and right) printed in standard Times New Roman 12 point font. Each page of the narrative must include the applicant's name and each page must be numbered.

_____Factor I (*Applicants may submit attachments totaling no more than 15 pages over and above the narrative statement that consist of copies of plans, drawings, photographs, award announcements or journal articles to illustrate previous project)*

_____ Factor II

_____ Factor III

_____ Factor IV

____ HUD 96010, "Logic Model"

Check of to ensure these items have been included in the application:

Appendix

_____ Budget

____HUD 424-CB" Grant Application Detailed Budget"
____ Budget Justification (No form provided and must be submitted for the total two-year grant period)
____ Indirect Cost Rate

_____ Letters of commitment, memoranda of understanding, or agreements)

II. Attachment B (All Required Forms)

Please see the program NOFA and application checklist in Appendix A to ensure forms are placed in the appropriate section of the application. Standard Forms and required certification are found in the **General Section** of the SuperNOFA, program specific forms are found below. **The following required certifications and assurance can be downloaded from *www.hud.gov*.**

_____SF-424, Application For Federal Assistance

_____HUD-424- Supplement, Survey of Ensuring Equal Opportunity for Applicants

_____ HUD-424-CB, Grant Application Detailed Budget

_____SF-LLL, Disclosure of Lobbying Activities

_____ HUD-2880, Applicant/Recipient Disclosure Update Report

_____ HUD-2993, Acknowledgement of Applicant Receipt

_____HUD-2994, Client Comments and Suggestions

_____ HUD-96010, Logic Model

[FR Doc. 05–21790 Filed 10–31–05; 8:45 am]
BILLING CODE 4210–62–C

Federal Register

Tuesday,
November 1, 2005

Department of Housing and Urban Development

Universities Rebuilding America Partnerships (URAP)—Historically Black Colleges and Universities (HBCU); Notice

DEPARTMENT OF HOUSING AND URBAN DEVELOPMENT

[Docket No. FR–5024–N–01]

Universities Rebuilding America Partnerships (URAP)—Historically Black Colleges and Universities (HBCU)

AGENCY: Office of Policy Development and Research, HUD.

ACTION: Notice of Funding Availability (NOFA).

OVERVIEW INFORMATION:

A. Federal Agency Name: Department of Housing and Urban Development, Office of Policy Development and Research, Office of University Partnerships.

B. Funding Opportunity Title: Universities Rebuilding America Partnerships (URAP)—Historically Black Colleges and Universities (HBCU).

C. Announcement Type: Initial announcement.

D. Funding Opportunity Numbers: The **Federal Register** number for this NOFA is FR–5024–N–01. The OMB approval number for this program is 2528–0235.

E. Catalog of Federal Domestic Assistance (CFDA) Number: The CFDA number for this program is 14.520.

F. Dates: The application submission date is December 1, 2005.

G. Additional Overview Content Information

1. *Purpose of the Program:* The Universities Rebuilding America Partnerships (URAP)—Historically Black Colleges and Universities (HBCU) program will provide critical resources and assistance to communities, principally for persons of low- and moderate-income, impacted by Hurricanes Katrina or Rita (or both) to revitalize their communities and rebuild their lives.

2. *Award Information:* Approximately $3.6 million of unobligated funds appropriated for the HBCU program under the Consolidated Appropriations Act, 2005 (Pub. L. 108–447, approved December 8, 2004) has been made available for this program. If funding remains after awards are made to all eligible applicants, the remaining funds will be used in the Fiscal Year (FY) 2006 funding cycle competition for the Office of University Partnerships, Historically Black Colleges and Universities program.

The maximum amount an applicant can request for award is $350,000 for a two-year (24-month) grant performance period.

3. *Eligible Applicants:* Historically Black Colleges and Universities that meet the definition of Historically Black Colleges and Universities as determined by the U.S. Department of Education (see 34 CFR 608.2) in accordance with that Department's responsibilities under Executive Order 13256, dated February 12, 2002, are eligible to apply for funding under this program. Applicants must be accredited by a national or regional accrediting agency recognized by the U.S. Department of Education.

Full Text of Announcement

I. Funding Opportunity Description

A. Purpose

The purpose of the Universities Rebuilding America Partnerships (URAP)—Historically Black Colleges and Universities (HBCU) program is to provide critical resources and assistance to communities, principally for persons of low- and moderate-income, impacted by Hurricanes Katrina or Rita (or both) to revitalize their communities and rebuild their lives.

For the purposes of this program, an applicant must provide services or activities in, or for the benefit of persons currently residing in or displaced from, a designated disaster area affected by Hurricanes Katrina or Rita.

B. Authority

HUD's authority for making funding available under this NOFA is the Consolidated Appropriations Act, 2005 (Pub. L. 108–447; approved December 8, 2004). This program is implemented through the regulations at 24 CFR 570.404 and through this NOFA, and the policies governing its operation are contained herein.

II. Award Information

A. Award Amount

Approximately $3.6 million of unobligated funds appropriated for the HBCU program under the Consolidated Appropriations Act, 2005 (Pub. L. 108–447) has been made available for this program. If funding remains after awards are made to all eligible applicants, the remaining funds will be used in FY06 to fund applicants for the Office of University Partnerships, HBCU program.

The maximum amount an applicant can request for award is $350,000 for a two-year (24-month) grant performance period.

B. Additional Information

1. For purposes of this NOFA, the 15 percent cap on public service activities (see 24 CFR 570.201(e)(1)) is inapplicable. See section VIII.A of this NOFA for more information.

2. Institutions applying for the URAP–HBCU program also may submit applications for the URAP–Community Design Program (CDP) awards.

III. Eligibility Information

A. Eligible Applicants

Historically Black Colleges and Universities as determined by the U.S. Department of Education (see 34 CFR 608.2) in accordance with that Department's responsibilities under Executive Order 13256, dated February 12, 2002, are eligible to apply for funding under this program. All applicants must be accredited by a national or regional accrediting agency recognized by the U.S. Department of Education.

B. Cost Sharing or Matching

None Required.

C. Other

1. Eligible Activities

Eligible activities are listed in 24 CFR part 570, subpart C, particularly §§ 570.201 through 570.206. Information regarding these activities can be found at: *www.hudclips.org* (click on the Code of Federal Regulations for detailed information).

a. Examples of eligible activities for this program include, but are not limited to:

(1) Clearance and demolition;

(2) Rehabilitation of residential structures, including lead-based paint hazard evaluation and reduction, and making accessibility and visitability modifications in accordance with the requirements of Section 504 of the Rehabilitation Act of 1973 (29 U.S.C. 794);

(3) Assistance to organizations within the disaster area, including community-based development organizations in accordance with 24 CFR 570.204; faith-based organizations; institutions of higher education; and state and local entities to carry out neighborhood revitalization and community economic development;

(4) Public service activities such as those general support activities that can help to stabilize a neighborhood in the designated disaster area and contribute to sustainable redevelopment of the area, including, but not limited to, such activities as those concerned with employment, job training, youth programs, child care, and health care services;

(5) Technical assistance to help neighborhood residents file insurance claims and obtain qualified, reputable contractors to make repairs on homes/property;

(6) Distance learning opportunities to displaced university students and local residents—who are away from the campus/office;

(7) Establishment of neighborhood technology centers (e.g., neighborhood network centers); and

(8) Technical assistance to small and minority-owned businesses.

b. Eligible activities that may be funded under this program are those eligible activities that meet both the Community Development Block Grant (CDBG) program national objectives and eligibility requirements.

c. The three national objectives of the CDBG program are to:

(1) Benefit low- or moderate-income persons;

(2) Aid in the prevention or elimination of slums or blight; and

(3) Meet other community development needs having a particular urgency because existing conditions pose a serious and immediate threat to the health and welfare of the community, and when other financial resources are not available to meet such needs. Criteria for determining whether an activity addresses one or more national objectives are provided at 24 CFR 570.208.

d. The CDBG publication entitled ''Community Development Block Grant Program Guide to National Objectives and Eligible Activities for Entitlement Communities'' describes the CDBG regulations, and a copy may be obtained from HUD's NOFA Information Center at 800–HUD–8929 (toll-free) or 800–HUD–2209 (toll-free) for the hearing-impaired.

2. Audit Requirements

Applicants must ensure that their most current A–133 audit is on file at the Federal Audit Clearinghouse. (Applicants are not required to submit a copy of the audit with the application.) Grantees that expend $500,000 or more in federal financial assistance in a single year (this can be program year or fiscal year) must be audited in accordance with the OMB requirements as established in 24 CFR part 84. Additional information regarding this requirement can be accessed at the following Web site: *http://harvester.census.gov/sac*.

3. Threshold Requirements

All applicants must comply with the threshold requirements as defined in the General Section of the FY2005 SuperNOFA (70 FR 13576, March 21, 2005) and the requirements listed below to be evaluated, rated, and ranked. Applications that do not meet these requirements will be considered ineligible for funding and will be disqualified:

a. An applicant must meet the eligibility requirements as defined in Section III.A. Eligible Applicants.

b. Only *one* application can be submitted per institution. If multiple applications are submitted, all will be disqualified.

c. An applicant must receive a minimum score of 75 points to be considered for funding.

d. An applicant must have a DUNS number to receive HUD grant funds. (The General Section of the FY 2005, SuperNOFA) provides information regarding the DUNS requirement).

4. Program Requirements

In addition to the program requirements listed in Section III.C of the General Section, applicants must meet the following program requirements:

a. All funds awarded are for a two-year (24-month) grant performance period.

b. Applicants must ensure that not less than 51 percent of the aggregated expenditures of the grant benefits low- and moderate-income persons under the criteria specified in 24 CFR 570.208(a) or 570.208(d)(5) or (6).

c. Environmental Requirements. Selection for award does not constitute approval of any proposed sites. Following selection for award, HUD will perform an environmental review of properties proposed for assistance in accordance with 24 CFR part 50. The results of the environmental review may require that proposed activities be modified or proposed sites be rejected. Applicants are particularly cautioned not to undertake or commit funds for acquisition or development of proposed properties prior to HUD approval of specific properties or areas. An application constitutes an assurance that the institution will help HUD comply with 24 CFR part 50; will supply HUD with all available and relevant information to perform an environmental review for each proposed property; will carry out mitigating measures required by HUD or select alternate property; and will not acquire, rehabilitate, convert, demolish, lease, repair, or construct property, and not commit or expend HUD or local funds for these program activities with respect to any eligible property until HUD's written approval of the property is received. In supplying HUD with environmental information, applicants should use the same guidance as provided in the HUD Notice CPD–05–07 entitled ''Field Environmental Review Processing for Rural Housing and Economic Development (RHED) Grants,'' issued August 30, 2005, *http://www.hudclips.org/subscriber/cgi/legis.cgi?legis*.

Further information and assistance on HUD's environmental requirements is available at *http://www.hud.gov/offices/cpd/energyenviron/environment/index.cfm*.

d. Labor Standards. By Proclamation 7924 of September 8, 2005, the President suspended Davis-Bacon labor standards requirements with respect to all contracts entered into on or after that date to be performed in designated areas affected by Hurricane Katrina. See 70 FR 54225, September 13, 2005. In areas not specifically listed in this proclamation, including some areas that may have been affected by Hurricane Rita, institutions and their subgrantees, contractors and subcontractors must comply with the labor standards (Davis-Bacon) requirements referenced in 24 CFR 570.603. All contractors must continue to comply with the provisions of the Contract Work Hours and Safety Standards Act to the extent previously required, as referenced in § 570.603.f., Economic Opportunities for Low- and Very-Low Income Persons (Section 3). The provisions of Section 3 of the Housing and Urban Development Act of 1968 (12 U.S.C. 1701u) apply to this NOFA. Regulations may be found at 24 CFR part 135.

IV. Application and Submission Information

A. Addresses To Request Application Package

Applicants may submit either a paper or electronic application. When submitting an electronic application, applicants may download the instructions to the application found on the Grants.gov Web site at *http://www.Grants.gov./Apply*. The instructions contain the General Section and Program Section of the published NOFA, as well as forms that you must complete and attach as a ZIP file to your application submission. If you have difficulty accessing the information, you may call the Grants.gov Support Desk toll-free at (800) 518–GRANTS or e-mail your questions to *Support@Grants.gov*. The Support Desk staff will assist you in accessing the information. Please remember that you must complete the five-step registration process in order to submit an application utilizing Grants.gov. Your registration allows you to electronically sign the application and enables Grants.gov to authenticate that the person signing the application has the legal authority to submit the application on behalf of the applicant.

Please see the General Section for information regarding the registration process or ask for registration information from the Grants.gov Support Desk. Please be aware that the registration process is a separate process from requesting e-mail notification of funding opportunities or downloading the application, and should be done as soon as you download the application from the Grants.gov Web site. If you are not sure if you are already registered, the Grants.gov Support Desk can verify that for you.

Applicants that choose to submit a paper application package must submit it to the following address: University Partnerships Clearinghouse, c/o Danya International, 8737 Colesville Road, Suite 1200, Silver Spring, MD 20910–3929. When submitting an application package, also please include the following information on the outside of the envelope:

a. Office of University Partnerships;

b. Universities Rebuilding America Partnerships (URAP)—Historically Black Colleges and Universities (HBCU);

c. Applicant's name and mailing address (including zip code); and

d. Applicant's telephone number (including area code).

A complete paper application package must include an original signed application, three copies, and one computer disk of the application (in Word 6.0 or higher) and required forms.

B. Content and Form of Application Submission

1. Forms

Copies of the forms required for submission are included in Appendix A of the General Section. The electronic version of the NOFA contains all forms required for submission. The required forms are as follows:

a. Application for Federal Assistance (SF–424);

b. Survey on Ensuring Equal Opportunity for Applicants (SF–424 Supplement);

c. Disclosure of Lobbying Activities (SF–LLL);

d. Applicant/Recipient Disclosure/Update Report (HUD–2880);

e. Program Logic Model (HUD–96010);

f. Grant Application Detailed Budget (HUD–424–CB);

g. Budget-By-Activity (HUD–40076); and

h. Facsimile Transmittal Cover Page (HUD–96011). This form must be used as part of the electronic application to transmit third-party documents and other information as described in the General Section as part of your electronic application submittal (if applicable). Applicants are advised to download the application package and complete the SF–424 first as it will pre-populate the Transmittal Cover page. The Transmittal Cover page will contain a unique identifier embedded in the page that will help HUD associate your faxed materials to your application. Please download the cover page and then make multiple copies to provide to any of the entities responsible for submitting faxed materials to HUD on your behalf. Please be sure to use the Facsimile Transmittal Cover Page as the cover page to any documents faxed in response to this NOFA. HUD will not accept entire applications submitted by facsimile.

2. Certifications and Assurances

Please read the General Section for detailed information on all Certifications and Assurances. All applications submitted through Grants.gov constitute an acknowledgement and agreement to all required certifications and assurances. Please include in your application each item listed. Applicants submitting paper copy applications should submit the application in the following order:

a. *SF–424, Application for Federal Assistance.* Please remember the following:

(1) The full grant amount (for the entire two years) should be entered, not the amount for just one year;

(2) Include the name, title, address, telephone number, fax number, and email address of the designated contact. This is the person who will receive the reviewers' comments; therefore, please ensure the accuracy of the information;

(3) The Employer Identification/Tax ID number;

(4) The DUNS number;

(5) The Catalog of Federal Domestic Assistance number for this program is 14.520;

(6) The project's proposed start date and completion date. For the purpose of this application, the program start date should be January 1, 2006; and

(7) The signature of the Authorized Organization Representative (AOR):

(a) *Applicants submitting electronic applications.* The signature of the AOR is the individual who has been authenticated by the credential provider to submit applications via Grants.gov. The AOR must be able to make a binding legal agreement with HUD. See the General Section for instructions and requirements for registration with Grants.gov.

(b) *Applicants submitting paper applications.* The signature of the Chief Executive Officer of the institution or his/her assigned designee is the individual who has the authority to make a binding legal agreement with HUD.

b. *Application checklist.* Applicants should use the checklist to ensure that they have all the required elements of their application submission. Applicants submitting an electronic application do not have to submit the checklist in their application. The checklist can be found in the NOFA (See Attachment A).

c. *Abstract.* Applicants must include no more than a one-page summary of the proposed project. Please include the following:

(1) A clear description of the proposed project activities, the designated disaster area, and the target population that will be assisted;

(2) A statement that the institution is an eligible institution because it is a two- or four-year fully accredited institution; the name of the accrediting agency; and an assurance that the accrediting agency is recognized by the U.S. Department of Education;

(3) The designated contact person, including phone number, fax number, and email address (this is the person who will receive the reviewers' comments; therefore, please ensure the accuracy of the information);

(4) University's name, department, mailing address, telephone number, fax number, and email address; and

(5) The principal investigator, if different from the designated contact person, for the project, including phone number, fax number, and email address.

d. *Narrative statement addressing the factors.* HUD will use the narrative response to the ''Rating Factors'' to evaluate, rate, and rank applications. The narrative statement is the main source of information. Applicants are advised to review each factor carefully for program-specific requirements. The response to each factor should be concise and contain only information relevant to the factor, but detailed enough to address each factor fully. Focus on how well the proposal responds to each of the factors. In factors where there are subfactors, each subfactor must be presented separately, with the short title of the subfactor presented. Make sure to address each subfactor and provide sufficient information about every element of the subfactor. The narrative section of an application must not exceed 15 pages, double spaced, in a Times Roman 12-point font (font requirements is not applicable to forms, budget narrative, assurances, commitment letters, memoranda of understanding, agreements, and abstracts). Each page of

the narrative must include the applicant's name and each page must be numbered. Please note that although submitting pages in excess of the page limit will not disqualify an applicant, HUD will not consider the information on any excess page. This exclusion may result in a lower score or failure to meet a threshold requirement.

e. *Budget.* The budget submission must include the following:

(1) *HUD–424–CB, ''Grant Application Detailed Budget.''* This budget form shows the total budget by year and by line item for the program activities to be carried out with the proposed HUD grant. Each year of the program should be presented separately. Applicants must also submit this form to reflect the total cost for the entire grant performance period (Grand Total).

(2) *HUD–40076–HBCU, ''Response Sheet, Budget-By-Activity.''* This form must be used to document the entire two-year grant performance period. The form should include a listing of tasks to be completed for each activity necessary to be performed to implement the program, and the overall costs for each activity.

Remember to check addition in totaling the categories on all forms so that all items are included in the total. All budget forms must be fully completed. If an application is selected for award, the applicant may be required to provide greater specificity to the budget during grant agreement negotiations.

(3) *Budget Justification.* A narrative must be submitted that explains how the applicant arrived at the cost estimates for any line item over $5,000 cumulative. The proposed cost estimates should be both reasonable for the work to be performed and consistent with rates established for the level of expertise required to perform the work proposed in the geographical area. When necessary, quotes from various vendors or historical data should be used and included. When an applicant proposes to use a consultant, the applicant must indicate whether there is a formal written agreement. For each consultant, please provide the name, if known, hourly or daily rate, and the estimated time on the project. If you are proposing to do any of the following activities: acquisition of real property, construction or clearance and demolition, rehabilitation of residential, commercial or industrial structures, you must submit at least two reasonable appraisals/estimates supplied by qualified entities, other than the HBCU. Such an entity must be involved in the business of housing rehabilitation, construction, or management. Equipment and contracts cannot be presented as total of estimated costs. For equipment, applicants must provide a list by type, cost for each item, and explanation of the equipments use.

(4) *Indirect Costs.* Indirect costs, if applicable, are allowable based on an established approved indirect cost rate. Applicants should include a copy of their indirect cost rate agreement with their application. Please refer to Section IV.F of the General Section for further discussion on electronic submission of required documentation. Applicants that are selected for funding that do not have an approved indirect cost rate agreement (established by the appropriate Federal agency, Certified Public Accountant, or auditor) will be required to submit an indirect cost proposal to the cognizant federal agency to establish a rate. In such cases, HUD will issue an award with a provisional rate and assist applicants in having a rate established.

f. *Appendix.* All letters of commitment and other required forms should be placed in this section. For applicants submitting electronic applications, please refer to Section IV.F of the General Section for instructions on how third-party documents are to be submitted to HUD using the electronic submission process. An applicant SHOULD NOT submit general support letters or resumes or other back-up materials. If this information is included, it will not be considered during the review process. The additional items will also slow the transmission of your application.

C. Submission Dates and Times

An electronic application package must be received electronically by the Grants.gov portal no later than 11:59:59 p.m. Eastern time on or before December 1, 2005. Applications may be submitted in advance of the submission date. Electronic faxes using the Facsimile Transmittal (Form HUD–96011) cover sheet contained in the electronic application may be submitted prior to the application submission date and must be received no later than 11:59:59 p.m. Eastern time on the application submission date. Please see Section IV.F of the General Section for electronic application submission instructions and timely receipt requirements.

Applicants that submit a paper application must have the package postmarked on or before 12 midnight on the application due date and received by the Office of University Partnerships Clearinghouse within three (3) calendar days of the application due date. Applications should be sent using DHL, Falcon Carrier, Federal Express (FedEx), United Parcel Services (UPS), or the United States Postal Services (USPS), as access by other delivery services to the clearinghouse is not guaranteed. All applicants must obtain and save a delivery service receipt or certificate of mailing to indicate the application was submitted for delivery on or before the application due date. Hand deliveries will not be accepted.

D. Intergovernmental Review

This program is excluded from an Intergovernmental Review.

E. Funding Restrictions

Ineligible CDBG activities are listed at 24 CFR 570.207. Funding may only be provided to applicants that meet the standards for eligible applicants in Section III.A. Ineligible activities include but are not limited to:

1. Curriculum development and/or expansion of an institution's existing curriculum;
2. General government expenses; and
3. Political activities.

F. Other Submission Requirements

1. Application Submission and Receipt Procedure. Please read the General Section carefully and completely for the submission and receipt procedures for all applications because failure to comply may disqualify your application.
2. Paper application will be accepted.

V. Application Review Information

A. Criteria

1. Rating Factor 1: Capacity of the Applicant and Relevant Organizational Experience (25 Points)

This factor addresses the extent to which the institution has the organizational resources necessary to successfully implement the proposed activities in a timely manner. In rating this factor, HUD will consider the extent to which the proposal demonstrates:

Knowledge and Experience (25 Points). The knowledge and experience possessed by the proposed project director and staff, including the day-to-day program manager, consultants (including technical assistance providers), and contractors in planning and managing this kind of program for which funding is being requested. Applicants must clearly identify the following: key project team members, titles (*e.g.*, project manager/coordinator, etc.), respective roles for the project staff, and a brief description of their relevant experience. Experience will be judged in terms of recent and relevant knowledge and skills of the staff to undertake the proposed eligible program

activities. HUD will consider experience within the last five (5) years to be recent and experience pertaining to similar activities to be relevant.

2. Rating Factor 2: Need/Extent of the Problem (10 Points)

This factor addresses the extent to which there is a need for funding the proposed program activities in the designated disaster area. An indication of urgency of meeting the need to benefit the target area is not necessary, as this has already been identified for the entire regions affected by Hurricane Katrina or Rita. The need(s) described must be relevant to the activities for which funds are being requested. The proposal will be evaluated on the extent to which an assessment of the need for the proposed activities has been documented.

3. Rating Factor 3: Soundness of Approach (55 Points)

This factor addresses the quality and effectiveness of the proposed work plan.

This factor will be evaluated based on the extent to which the proposed work plan demonstrates the following:

a. (45 Points) Quality of the Work Plan. This subfactor will be evaluated on the extent to which an applicant provides a clear detailed description of the proposed project and anticipated accomplishments.

(1) (35 Points) Specific Services and/or Activities. The work plan must describe all proposed activities and major tasks required to successfully implement the proposed project and achieve anticipated accomplishments.

(a) Applicants must provide a clear description of the proposed activities and address the following:

(i) Describe each proposed activity required to successfully implement and complete the proposed project in measurable terms (*e.g.*, the number of persons to be trained and employed, houses to be rehabilitated, or minority-owned businesses to be started, etc.);

(ii) List how each proposed activity meets one of the following Community Development Block Grant (CDBG) Program national objectives:

- Benefit low- and moderate-income persons;
- Aid in the prevention or elimination of slums or blight; or
- Meet other community development needs having a particular urgency because existing conditions pose a serious and immediate threat to the health and welfare of the community, and for which other financial resources are not available. Criteria for determining whether an activity addresses one or more objective are provided at 24 CFR 570.208;

(b) Outline the major tasks required (in sequential order) to successfully implement and complete the proposed program activities. Include target completion dates for each activity/task (in 6-month intervals, up to 24-months); and

(c) Identify the individuals, as described in Factor 1, who will be responsible for completing each activity/task.

(2) (10 Points) Describe clearly how each proposed activity will:

(a) Address the needs identified in Factor 2;

(b) Relate to and not duplicate other activities in the designated disaster area. Duplicative effort will be acceptable only if an applicant can demonstrate through documentation that there is a population in need that is not being served; and

(c) Involve and empower citizens of the target area in the proposed project.

b. (5 Points) Involvement of the Faculty and Students. The applicant must describe the extent to which it proposes to integrate the institution's students and faculty into proposed project activities.

c. (5 Points) Involvement of Community. Applicants must identify a partner within the designated hurricane disaster area to serve the impacted community, neighborhood, municipality, or metropolitan area. Applicants may receive four or five points under this subfactor as follows:

(1) (4 Points) Local community partner. Examples of potential partners are state and local governments; a quasi-government agency, such as a development corporation; public housing authority; local or national nonprofit organizations; institutions of higher education; financial institutions; foundations; and faith-based and other community-based organizations. Applicants must obtain a written agreement with the local partner that outlines the services needed and the involvement of the partner in the program to receive funding under this program.

(2) (5 Points) HBCU Partner. Applicants are encouraged to partner with an HBCU that is located within the hurricane-affected area. Applicants must obtain a written agreement with the local HBCU that outlines the services needed and the involvement of the partner in the program to receive funding under this program.

HUD reserves the right to require grantees to partner with a different HBCU than the institution that is identified at the time of application.

4. Rating Factor 4: Achieving Results and Program Evaluation (10 Points)

This factor reflects HUD's goal to embrace high standards of management and accountability. It measures the applicant's commitment to assess its performance to achieve the program's proposed objectives and goals. Applicants are required to develop an effective, quantifiable, outcome oriented evaluation plan for measuring performance and determining that objectives and goals have been achieved. The Logic Model is a summary of the narrative statements presented in Factors 1–3. Therefore, the information submitted on the logic model should be consistent with the information contained in the narrative statements, but does not have to be detailed.

''Outcomes'' are benefits accruing to the community during or after participation in the program. Applicants must clearly identify the outcomes to be measured and achieved. Examples of outcomes include increased employment opportunities in the designated disaster area by a certain percentage, increased incomes/wages or other assets for persons trained, or enhanced family stability through the creation of job opportunities.

In addition, applicants must establish interim benchmarks and outputs that lead to the ultimate achievement of outcomes. ''Outputs'' are the direct products of the program's activities. Examples of outputs are the number of new affordable housing units, the number of homes that have been renovated, and the number of facilities that have been constructed or rehabilitated. Outputs should produce outcomes for the program. At a minimum, an applicant must address the following activities in the evaluation plan:

a. Measurable outputs to be accomplished (*e.g.*, the number of persons to be trained and employed, houses to be rehabilitated, or minority-owned businesses to be started); and

b. Measurable outcomes the grant will have in the designated disaster target area or population.

This information must be placed on a HUD–96010, Program Outcome Logic Model form. Applicants may use as many copies of this form as required. It will not be included in the page count requirement. A narrative is not required or requested. The completed logic model should stand on its own. However, if a narrative is provided, those pages will be included in the page count. Additional information on this

form and how to use it can be found in the General Section.

B. Review and Selection Process

1. Application Selection Process

Two types of reviews will be conducted:

a. A threshold review to determine an applicant's basic eligibility; and

b. A technical review for all applications that pass the threshold review to rate and rank the application based on the ''Rating Factors'' listed in Section V.A.

Only those applications that pass the threshold review will receive a technical review and be rated and ranked.

2. Rating Panels

To review and rate applications, HUD may establish panels, which may include experts or consultants not currently employed by HUD.

3. Ranking

HUD will fund applications in rank order, until all available program funds are awarded. In order to be funded, an applicant must receive a minimum score of 75 points out of a possible 100 points. HUD reserves the right to reduce the amount of funding requested in order to fund as many highly ranked applications as possible. Additionally, if funds remain after funding the highest ranked applications, HUD may fund part of the next highest-ranking application. If an applicant turns down an award offer, HUD will make an award to the next highest-ranking application. If funds remain after all selections have been made, the remaining funds will be carried over to the FY06 Historically Black Colleges and Universities Program funding cycle's competition.

4. Correction to Deficient Applications

The General Section provides the procedures for correction to deficient applications.

VI. Award Administration Information

A. Award Notice

After all selections have been made, HUD will notify all winning applicants in writing. HUD may require winning applicants to participate in additional negotiations before receiving an official award. For further discussion on this matter, please refer to the General Section.

B. Administrative and National Policy Requirements

For further discussion of this matter, please refer to Section VI.B. in the General Section.

1. Debriefing

The General Section provides the procedures for requesting a debriefing. All requests for debriefings must be made in writing and submitted no later than 90 days from the announcement of the awardees to: Ophelia Wilson, Office of University Partnerships, Robert C. Weaver Federal Building, 451 Seventh Street, SW., Room 8130, Washington, DC 20410–6000.

2. Administrative

Grants awarded under this NOFA will be governed by the provisions of 24 CFR part 84 (Grants and Agreements with Institutions of Higher Education, Hospitals and Other Non-Profit Organizations), A–21 (Cost Principles for Educational Institutions), and A–133 (Audits of States, Local Governments, and Non-Profit Organizations). Applicants can access the Office of Management and Budget (OMB) circulars at the OMB website at *www.whitehouse.gov/omb/circulars/index.html.*

3. OMB Circulars and Governmentwide Regulations Applicable to Financial Assistance Programs

The General Section provides further discussion on this matter.

4. Executive Order 13202, Preservation of Open Competition and Government Neutrality Towards Government Contractors' Labor Relations on Federal and Federally Funded Construction Projects

See the General Section for further discussion.

5. Procurement of Recovered Materials

See Section III.C.4 of the General Section for further discussion.

6. Code of Conduct

See the General Section for further discussion.

C. Reporting

All grant recipients under this NOFA are required to submit quarterly progress reports. The progress reports shall consist of two components, a narrative that must reflect the activities undertaken during the reporting period and a financial status report, as well as a cumulative summary of costs incurred during the reporting.

For each reporting period, as part of the required report to HUD, grant recipients must include a completed Logic Model form (HUD–96010), which identifies output and outcome achievements.

VII. Agency Contacts

Applicants may contact Ophelia Wilson at (202) 708–3061, extension 4390, or Susan Brunson at (202) 708–3061, extension 3852. Persons with speech or hearing impairments may call the Federal Information Relay Service (TTY) at (800) 877–8339. Except for the ''800'' number, these numbers are not toll-free. Applicants may also reach Ms. Wilson via e-mail at *Ophelia_Wilson@hud.gov,* and/or Ms. Brunson at *Susan_S._Brunson@hud.gov.*

VIII. Other Information

A. Fifteen (15) Percent Cap on Public Services

For this URAP–HBCU NOFA, the 15 percent cap on public service activities provided for in 24 CFR 570.201(e)(1) is inapplicable. Although HUD generally publishes regulatory changes for comment before issuing the regulation for effect, HUD may issue a regulatory change when good cause allows the Department to omit advance notice and comment, in accordance with HUD's rules at 24 CFR part 10. The good cause requirement is satisfied when prior public procedure is ''impractical, unnecessary, or contrary to the public interest'' (see 24 CFR 10.1). Because of the widespread devastation caused by Hurricanes Katrina and Rita and the urgency to provide assistance to persons affected by these natural disasters, HUD has determined that it would be contrary to the public interest to delay the effectiveness of this regulatory change in order to solicit prior public comment. Therefore, for grants awarded pursuant to this URAP–HBCU NOFA, there is no cap on the amount of grant funds that may be used for public service activities. This change is effective for this URAP–HBCU NOFA only and does not extend to any other program.

B. Environmental Requirements

This NOFA provides funding under, and does not alter the environmental requirements of 24 CFR 570.404. Accordingly, under 24 CFR 50.19(c)(5), this NOFA is categorically excluded from environmental review under the National Environmental Policy Act of 1969 (42 U.S.C. 4321). Activities under this NOFA are subject to the environmental review provisions set out at 24 CFR 570.404(i). See also environmental requirements in Sec. III.C.4.d of this NOFA.

C. Paperwork Reduction Act

The information collection requirements contained in this document have been submitted to the

Office of Management and Budget (OMB) under the Paperwork Reduction Act of 1995 (44 U.S.C. 3501–3520) and assigned control number 2528–0235. In accordance with the Paperwork Reduction Act, HUD may not conduct or sponsor, and a person is not required to respond to, a collection of information unless the collection displays a currently valid OMB control number. Public reporting burden for the collection of information is estimated to average 356 hours per annum per respondent for the application and grant administration. This includes the time for collecting, reviewing, and reporting the data for the application, quarterly, semi-annual, and final reports. The information will be used for grantee selection and monitoring the administration of funds. Response to this request for information is required in order to receive the benefits to be derived.

Dated: October 24, 2005.

Darlene F. Williams,

Assistant Secretary for Policy Development and Research.

BILLING CODE 4210–62–P

Attachment A--Application Checklist
Universities Rebuilding America Partnerships (URAP) –Historically Black Colleges and Universities (HBCU)

This checklist identifies application submission requirements. Applicants are requested to use this checklist when preparing an application to ensure submission of all required elements. Applicants submitting an electronic application do not have to submit the checklist. Applicants that submit paper applications must include a copy of the checklist in their application.

Check of to ensure these items have been included in the application:

_____ SF-HUD 424 "Application For Federal Assistance"

_____ Application Checklist

_____ Abstract (must include no more than a one page summary of the proposed project)

Indicate the page number where each of the Factors are located:
Narrative Statement Addressing the Factors for Award. The narrative including tables and maps must not exceed 15 pages, (excluding forms, abstracts, budget narrative, assurances, commitment letters, memorandum of understanding, and agreements) double-spaced on one side of the paper, with on-inch margins (from top, bottom, left and right) printed in standard Times New Roman 12 point font. Each page of the narrative must include the applicant's name and each page must be numbered.

_____Factor I

_____ Factor II

_____ Factor III

_____ Factor IV

____ HUD 96010, "Logic Model"

Check of to ensure these items have been included in the application:

Appendix

_____ Budget

_____HUD 424-CB" Grant Application Detailed Budget"

_____HUD-40076 " Budget-By-Activity"
_____Budget Justification (No form provided and must be submitted for the total two-year grant period)
_____Indirect Cost Rate

_____ Letters of commitment, memoranda of understanding, or agreements)

Attachment B (All Required Forms)

Please see the program NOFA and application checklist in Appendix A to ensure forms are placed in the appropriate section of the application. Standard Forms and required certification are found in the **General Section** of the SuperNOFA, program specific forms are found below. **The following required certifications and assurance can be downloaded from *www.hud.gov*.**

_____SF-424, Application For Federal Assistance

_____HUD-424- Supplement, Survey of Ensuring Equal Opportunity for Applicants

_____HUD-424-CB, Grant Application Detailed Budget

_____SF-LLL, Disclosure of Lobbying Activities

_____HUD-2880, Applicant/Recipient Disclosure Update Report

_____HUD-2993, Acknowledgement of Applicant Receipt

_____HUD-2994, Client Comments and Suggestions

_____HUD-40076-HBCU "Budget-By-Activity" (*Section Only)*

_____HUD-96010, Logic Model

[FR Doc. 05–21789 Filed 10–31–05; 8:45 am]
BILLING CODE 4210–62–C

Reader Aids

Federal Register

Vol. 70, No. 210

Tuesday, November 1, 2005

CUSTOMER SERVICE AND INFORMATION

Federal Register/Code of Federal Regulations	
General Information, indexes and other finding aids	**202–741–6000**
Laws	**741–6000**
Presidential Documents	
Executive orders and proclamations	**741–6000**
The United States Government Manual	**741–6000**
Other Services	
Electronic and on-line services (voice)	**741–6020**
Privacy Act Compilation	**741–6064**
Public Laws Update Service (numbers, dates, etc.)	**741–6043**
TTY for the deaf-and-hard-of-hearing	**741–6086**

ELECTRONIC RESEARCH

World Wide Web

Full text of the daily Federal Register, CFR and other publications is located at: **http://www.gpoaccess.gov/nara/index.html**

Federal Register information and research tools, including Public Inspection List, indexes, and links to GPO Access are located at: **http://www.archives.gov/federal_register/**

E-mail

FEDREGTOC-L (Federal Register Table of Contents LISTSERV) is an open e-mail service that provides subscribers with a digital form of the Federal Register Table of Contents. The digital form of the Federal Register Table of Contents includes HTML and PDF links to the full text of each document.

To join or leave, go to **http://listserv.access.gpo.gov** and select *Online mailing list archives, FEDREGTOC-L, Join or leave the list (or change settings);* then follow the instructions.

PENS (Public Law Electronic Notification Service) is an e-mail service that notifies subscribers of recently enacted laws.

To subscribe, go to **http://listserv.gsa.gov/archives/publaws-l.html** and select *Join or leave the list (or change settings);* then follow the instructions.

FEDREGTOC-L and **PENS** are mailing lists only. We cannot respond to specific inquiries.

Reference questions. Send questions and comments about the Federal Register system to: **fedreg.info@nara.gov**

The Federal Register staff cannot interpret specific documents or regulations.

FEDERAL REGISTER PAGES AND DATE, OCTOBER

65825–66246 1

CFR PARTS AFFECTED DURING OCTOBER

At the end of each month, the Office of the Federal Register publishes separately a List of CFR Sections Affected (LSA), which lists parts and sections affected by documents published since the revision date of each title.

REMINDERS

The items in this list were editorially compiled as an aid to Federal Register users. Inclusion or exclusion from this list has no legal significance.

RULES GOING INTO EFFECT NOVEMBER 1, 2005

AGRICULTURE DEPARTMENT

Agricultural Marketing Service

Milk marketing orders:
- Appalachian and Southeast; published 10-12-05

COMMERCE DEPARTMENT

National Oceanic and Atmospheric Administration

Fishery conservation and management:
- Northeastern United States fisheries—
  - Summer flounder, scup, and black sea bass; published 8-2-05
  - Summer flounder, scup, and black sea bass; correction; published 10-4-05
- West Coast States and Western Pacific fisheries—
  - Spiny dogfish; published 11-1-05

HEALTH AND HUMAN SERVICES DEPARTMENT

Food and Drug Administration

Animal drugs, feeds, and related products:
- Invermectin and praziquantel paste oral dosage; published 11-1-05

HOMELAND SECURITY DEPARTMENT

Coast Guard

Drawbridge operations:
- Massachusetts; published 10-5-05

PENSION BENEFIT GUARANTY CORPORATION

Single-employer plans:
- Allocation of assets—
  - Interest assumptions for valuing and paying benefits; published 10-14-05

TRANSPORTATION DEPARTMENT

Federal Aviation Administration

Airworthiness directives:
- Boeing; published 9-27-05
- MD Helicopters, Inc.; published 10-17-05
- Teledyne Continental Motors; published 9-27-05

Standard instrument approach procedures; published 11-1-05

COMMENTS DUE NEXT WEEK

AGENCY FOR INTERNATIONAL DEVELOPMENT

Assistance awards to U.S. non-Governmental organizations; marking requirements; Open for comments until further notice; published 8-26-05 [FR 05-16698]

AGRICULTURE DEPARTMENT

Agricultural Marketing Service

Cotton classing, testing and standards:
- Classification services to growers; 2004 user fees; Open for comments until further notice; published 5-28-04 [FR 04-12138]

AGRICULTURE DEPARTMENT

Commodity Credit Corporation

Loan and purchase programs:
- Sugar program marketing allocations; transfer; comments due by 11-7-05; published 9-7-05 [FR 05-17684]

AGRICULTURE DEPARTMENT

Food Safety and Inspection Service

Meat and poultry inspection:
- Specified risk materials use for human food, prohibition; and non-ambulatory disabled cattle, disposition requirements; comments due by 11-7-05; published 9-7-05 [FR 05-17683]

AGRICULTURE DEPARTMENT

Natural Resources Conservation Service

Reports and guidance documents; availability, etc.:
- National Handbook of Conservation Practices; Open for comments until further notice; published 5-9-05 [FR 05-09150]

CHEMICAL SAFETY AND HAZARD INVESTIGATION BOARD

Meetings; Sunshine Act; Open for comments until further notice; published 10-4-05 [FR 05-20022]

COMMERCE DEPARTMENT

National Oceanic and Atmospheric Administration

Fishery conservation and management:
- Atlantic highly migratory species—
  - Atlantic commercial shark management measures; comments due by 11-7-05; published 10-6-05 [FR 05-20111]
- Caribbean, Gulf, and South Atlantic fisheries—
  - Gulf of Mexico essential fish habitat; comments due by 11-10-05; published 9-26-05 [FR 05-19169]
- West Coast States and Western Pacific fisheries—
  - Pacific Coast groundfish; comments due by 11-8-05; published 10-24-05 [FR 05-21182]

COMMODITY FUTURES TRADING COMMISSION

Commodity Exchange Act:
- Futures commission merchants and specified foreign currency forward and inventory capital charges; alternative market risk and credit risk capital charges; comments due by 11-10-05; published 10-11-05 [FR 05-20258]

COURT SERVICES AND OFFENDER SUPERVISION AGENCY FOR THE DISTRICT OF COLUMBIA

Semi-annual agenda; Open for comments until further notice; published 12-22-03 [FR 03-25121]

DEFENSE DEPARTMENT

Acquisition regulations:
- Pilot Mentor-Protege Program; Open for comments until further notice; published 12-15-04 [FR 04-27351]

Privacy Act; implementation; comments due by 11-7-05; published 9-7-05 [FR 05-17646]

EDUCATION DEPARTMENT

Grants and cooperative agreements; availability, etc.:
- Vocational and adult education—
  - Smaller Learning Communities Program; Open for comments until further notice; published 2-25-05 [FR E5-00767]

ENERGY DEPARTMENT

Meetings:
- Environmental Management Site-Specific Advisory Board—
  - Oak Ridge Reservation, TN; Open for comments until further notice; published 11-19-04 [FR 04-25693]

ENERGY DEPARTMENT

Energy Efficiency and Renewable Energy Office

Commercial and industrial equipment; energy efficiency program:
- Test procedures and efficiency standards—
  - Commercial packaged boilers; Open for comments until further notice; published 10-21-04 [FR 04-17730]

ENERGY DEPARTMENT

Federal Energy Regulatory Commission

Electric utilities (Federal Power Act):
- Section 203 transactions; expeditious approval procedures; comments due by 11-7-05; published 10-7-05 [FR 05-20311]
- Small power production and cogeneration facilities; comments due by 11-8-05; published 10-18-05 [FR 05-20695]

ENVIRONMENTAL PROTECTION AGENCY

Air programs; approval and promulgation; State plans for designated facilities and pollutants:
- Massachusetts; comments due by 11-7-05; published 10-6-05 [FR 05-20106]

Environmental statements; availability, etc.:
- Coastal nonpoint pollution control program—
  - Minnesota and Texas; Open for comments until further notice; published 10-16-03 [FR 03-26087]

Water pollution control:
- National Pollutant Discharge Elimination System—
  - Concentrated animal feeding operations in New Mexico and Oklahoma; general permit for discharges; Open for comments until further notice; published 12-7-04 [FR 04-26817]
  - Texas; general permit for territorial seas; Open for comments until further notice; published 9-6-05 [FR 05-17614]

Water pollution; effluent guidelines for point source categories:
Meat and poultry products processing facilities; Open for comments until further notice; published 9-8-04 [FR 04-12017]

FEDERAL COMMUNICATIONS COMMISSION

Committees; establishment, renewal, termination, etc.:
Technological Advisory Council; Open for comments until further notice; published 3-18-05 [FR 05-05403]

Common carrier services:
Interconnection—
Incumbent local exchange carriers unbounding obligations; local competition provisions; wireline services offering advanced telecommunications capability; Open for comments until further notice; published 12-29-04 [FR 04-28531]

Television broadcasting:
Closed captioning of video programming; comments due by 11-10-05; published 9-26-05 [FR 05-19161]

FEDERAL DEPOSIT INSURANCE CORPORATION

Deposit insurance coverage; stored value cards and other nontraditional access mechanisms; comments due by 11-7-05; published 8-8-05 [FR 05-15568]

Economic Growth and Regulatory Paperwork Reduction Act; implementation:
Burden reduction recommendations; comments due by 11-9-05; published 8-11-05 [FR 05-15923]

FEDERAL RESERVE SYSTEM

Bank holding companies; change in bank control (Regulation Y):
Capital adequacy guidelines; small bank holding company policy statement; qualification criteria; comments due by 11-7-05; published 9-8-05 [FR 05-17740]

Economic Growth and Regulatory Paperwork Reduction Act; implementation:
Burden reduction recommendations; comments due by 11-9-05; published 8-11-05 [FR 05-15923]

HEALTH AND HUMAN SERVICES DEPARTMENT

Food and Drug Administration

Food and cosmetics:
Cattle materials; prohibited use; comments due by 11-7-05; published 9-7-05 [FR 05-17693]

Human drugs:
Cold, cough, allergy, bronchodilator, and antiasthmatic products—
Bronchodilator products (OTC); comments due by 11-10-05; published 7-13-05 [FR 05-13709]
Combination drug products; tentative final monograph amendment; comments due by 11-10-05; published 7-13-05 [FR 05-13708]

Reports and guidance documents; availability, etc.:
Evaluating safety of antimicrobial new animal drugs with regard to their microbiological effects on bacteria of human health concern; Open for comments until further notice; published 10-27-03 [FR 03-27113]
Medical devices—
Dental noble metal alloys and base metal alloys; Class II special controls; Open for comments until further notice; published 8-23-04 [FR 04-19179]

HOMELAND SECURITY DEPARTMENT

Coast Guard

Anchorage regulations:
Maryland; Open for comments until further notice; published 1-14-04 [FR 04-00749]

Ports and waterways safety; regulated navigation areas, safety zones, security zones, etc.:
Port Valdez and Valdez Narrows, AK; comments due by 11-7-05; published 10-7-05 [FR 05-20276]

HOUSING AND URBAN DEVELOPMENT DEPARTMENT

Grants and cooperative agreements; availability, etc.:
Homeless assistance; excess and surplus Federal properties; Open for comments until further notice; published 8-5-05 [FR 05-15251]

HUD-owned properties:
HUD-acquired single family property disposition—
Good Neighbor Next Door Sales Program; comments due by 11-7-05; published 9-8-05 [FR 05-17642]

HOUSING AND URBAN DEVELOPMENT DEPARTMENT

Federal Housing Enterprise Oversight Office

Regulatory review; comment request; comments due by 11-7-05; published 9-7-05 [FR 05-17656]

INTERIOR DEPARTMENT

Fish and Wildlife Service

Endangered and threatened species permit applications
Recovery plans—
Paiute cutthroat trout; Open for comments until further notice; published 9-10-04 [FR 04-20517]

Environmental statements; availability, etc.:
Incidental take permits—
Pocahontas County, WV; West Virginia northern flying squirrel; comments due by 11-7-05; published 9-7-05 [FR 05-17672]

LABOR DEPARTMENT

Occupational Safety and Health Administration

Construction safety and health standards:
Lead in construction; comments due by 11-7-05; published 8-29-05 [FR 05-17067]

NUCLEAR REGULATORY COMMISSION

Environmental statements; availability, etc.:
Fort Wayne State Developmental Center; Open for comments until further notice; published 5-10-04 [FR 04-10516]

Radioactive wastes, high-level; disposal in geologic repositories:
Yucca Mountain, NV; dose standard after 10,000 years; implementation; comments due by 11-7-05; published 9-8-05 [FR 05-17778]

SMALL BUSINESS ADMINISTRATION

Disaster loan areas:
Maine; Open for comments until further notice; published 2-17-04 [FR 04-03374]

SOCIAL SECURITY ADMINISTRATION

Social security benefits and supplemental security income:
Federal old age, survivors, and disability insurance, and aged, blind, and disabled—
Disability and blindness determinations; growth impairment listings; comments due by 11-7-05; published 9-8-05 [FR 05-17790]

Supplemental security income:
Income and resources provision changes; comments due by 11-7-05; published 9-6-05 [FR 05-17588]

OFFICE OF UNITED STATES TRADE REPRESENTATIVE

Trade Representative, Office of United States

Generalized System of Preferences:
2003 Annual Product Review, 2002 Annual Country Practices Review, and previously deferred product decisions; petitions disposition; Open for comments until further notice; published 7-6-04 [FR 04-15361]

TRANSPORTATION DEPARTMENT

Air travel; nondiscrimination on basis of disability:
Medical oxygen and portable respiration assistive devices; comments due by 11-7-05; published 9-7-05 [FR 05-17605]

TRANSPORTATION DEPARTMENT

Federal Aviation Administration

Air carrier certification and operations:
Mode S transponder requirements in National Airspace System
FAA policy; comments due by 11-7-05; published 10-7-05 [FR 05-20183]

Airworthiness directives:
Airbus; comments due by 11-7-05; published 9-7-05 [FR 05-17606]
Avions Marcel Dassault-Breguet; comments due by 11-8-05; published 9-9-05 [FR 05-17598]
Boeing; comments due by 11-7-05; published 9-21-05 [FR 05-18795]
Bombardier; comments due by 11-7-05; published 10-6-05 [FR 05-20065]

Burkhardt Grob Luft-Und Raumfahrt Gmbh & Co. KG; comments due by 11-9-05; published 10-5-05 [FR 05-19942]

Dassault; comments due by 11-7-05; published 9-7-05 [FR 05-17599]

DG Flugzeughau GmbH; comments due by 11-9-05; published 10-5-05 [FR 05-19936]

Empresa Brasileira de Aeronautica S.A. (EMBRAER); comments due by 11-7-05; published 10-7-05 [FR 05-20269]

Engine Components Inc.; comments due by 11-8-05; published 9-9-05 [FR 05-17893]

Glaser-Dirks Flugzeughau GmbH; comments due by 11-9-05; published 10-5-05 [FR 05-19935]

Israel Aircraft Industries, Ltd.; comments due by 11-7-05; published 9-7-05 [FR 05-17600]

McDonnell Douglas; comments due by 11-7-05; published 9-22-05 [FR 05-18907]

Airworthiness standards:

Special conditions—

Raytheon Model HS.125 airplanes; comments due by 11-7-05; published 10-7-05 [FR 05-20175]

Standard instrument approach procedures; comments due by 11-7-05; published 9-21-05 [FR 05-18812]

TREASURY DEPARTMENT

Comptroller of the Currency

Economic Growth and Regulatory Paperwork Reduction Act; implementation:

Burden reduction recommendations; comments due by 11-9-05; published 8-11-05 [FR 05-15923]

TREASURY DEPARTMENT

Internal Revenue Service

Income taxes:

Protected benefits; section 411(d)(6) anti-cutback rules; public hearing; comments due by 11-10-05; published 8-12-05 [FR 05-15960]

TREASURY DEPARTMENT

Thrift Supervision Office

Economic Growth and Regulatory Paperwork Reduction Act; implementation:

Burden reduction recommendations; comments due by 11-9-05; published 8-11-05 [FR 05-15923]

LIST OF PUBLIC LAWS

This is a continuing list of public bills from the current session of Congress which have become Federal laws. It may be used in conjunction with "P L U S" (Public Laws Update Service) on 202–741–6043. This list is also available online at *http://www.archives.gov/federal-register/laws.html*.

The text of laws is not published in the **Federal Register** but may be ordered in "slip law" (individual pamphlet) form from the Superintendent of Documents, U.S. Government Printing Office, Washington, DC 20402 (phone, 202–512–1808). The text will also be made available on the Internet from GPO Access at *http://www.gpoaccess.gov/plaws/index.html*. Some laws may not yet be available.

S. 397/P.L. 109–92

Protection of Lawful Commerce in Arms Act (Oct. 26, 2005; 119 Stat. 2095)

S. 55/P.L. 109–93

Rocky Mountain National Park Boundary Adjustment Act of 2005 (Oct. 26, 2005; 119 Stat. 2104)

S. 156/P.L. 109–94

Ojito Wilderness Act (Oct. 26, 2005; 119 Stat. 2106)

Last List October 24, 2005

Public Laws Electronic Notification Service (PENS)

PENS is a free electronic mail notification service of newly enacted public laws. To subscribe, go to *http://listserv.gsa.gov/archives/publaws-l.html*

Note: This service is strictly for E-mail notification of new laws. The text of laws is not available through this service. **PENS** cannot respond to specific inquiries sent to this address.

TABLE OF EFFECTIVE DATES AND TIME PERIODS—NOVEMBER 2005

This table is used by the Office of the Federal Register to compute certain dates, such as effective dates and comment deadlines, which appear in agency documents. In computing these dates, the day after publication is counted as the first day.

When a date falls on a weekend or holiday, the next Federal business day is used. (See 1 CFR 18.17)

A new table will be published in the first issue of each month.

DATE OF FR PUBLICATION	15 DAYS AFTER PUBLICATION	30 DAYS AFTER PUBLICATION	45 DAYS AFTER PUBLICATION	60 DAYS AFTER PUBLICATION	90 DAYS AFTER PUBLICATION
Nov 1	Nov 16	Dec 1	Dec 16	Jan 3	Jan 30
Nov 2	Nov 17	Dec 2	Dec 19	Jan 3	Jan 31
Nov 3	Nov 18	Dec 5	Dec 19	Jan 3	Feb 1
Nov 4	Nov 21	Dec 5	Dec 19	Jan 3	Feb 2
Nov 7	Nov 22	Dec 7	Dec 22	Jan 6	Feb 6
Nov 8	Nov 23	Dec 8	Dec 23	Jan 9	Feb 6
Nov 9	Nov 25	Dec 9	Dec 27	Jan 9	Feb 7
Nov 10	Nov 25	Dec 12	Dec 27	Jan 9	Feb 8
Nov 14	Nov 29	Dec 14	Dec 29	Jan 13	Feb 13
Nov 15	Nov 30	Dec 15	Dec 30	Jan 17	Feb 13
Nov 16	Dec 1	Dec 16	Jan 3	Jan 17	Feb 14
Nov 17	Dec 2	Dec 19	Jan 3	Jan 17	Feb 15
Nov 18	Dec 5	Dec 19	Jan 3	Jan 17	Feb 16
Nov 21	Dec 6	Dec 21	Jan 5	Jan 20	Feb 21
Nov 22	Dec 7	Dec 22	Jan 6	Jan 23	Feb 21
Nov 23	Dec 8	Dec 23	Jan 9	Jan 23	Feb 21
Nov 25	Dec 12	Dec 27	Jan 9	Jan 24	Feb 23
Nov 28	Dec 13	Dec 28	Jan 12	Jan 27	Feb 27
Nov 29	Dec 14	Dec 29	Jan 13	Jan 30	Feb 27
Nov 30	Dec 15	Dec 30	Jan 17	Jan 30	Feb 28