Federal Register

2–2–06 Thursday
Vol. 71 No. 22 Feb. 2, 2006

Pages 5579–5776

The **FEDERAL REGISTER** (ISSN 0097–6326) is published daily, Monday through Friday, except official holidays, by the Office of the Federal Register, National Archives and Records Administration, Washington, DC 20408, under the Federal Register Act (44 U.S.C. Ch. 15) and the regulations of the Administrative Committee of the Federal Register (1 CFR Ch. I). The Superintendent of Documents, U.S. Government Printing Office, Washington, DC 20402 is the exclusive distributor of the official edition. Periodicals postage is paid at Washington, DC.

The **FEDERAL REGISTER** provides a uniform system for making available to the public regulations and legal notices issued by Federal agencies. These include Presidential proclamations and Executive Orders, Federal agency documents having general applicability and legal effect, documents required to be published by act of Congress, and other Federal agency documents of public interest.

Documents are on file for public inspection in the Office of the Federal Register the day before they are published, unless the issuing agency requests earlier filing. For a list of documents currently on file for public inspection, see *www.archives.gov.*

The seal of the National Archives and Records Administration authenticates the Federal Register as the official serial publication established under the Federal Register Act. Under 44 U.S.C. 1507, the contents of the **Federal Register** shall be judicially noticed.

The **Federal Register** is published in paper and on 24x microfiche. It is also available online at no charge as one of the databases on GPO Access, a service of the U.S. Government Printing Office.

The online edition of the **Federal Register** *www.gpoaccess.gov/nara,* available through GPO Access, is issued under the authority of the Administrative Committee of the Federal Register as the official legal equivalent of the paper and microfiche editions (44 U.S.C. 4101 and 1 CFR 5.10). It is updated by 6 a.m. each day the **Federal Register** is published and includes both text and graphics from Volume 59, Number 1 (January 2, 1994) forward.

For more information about GPO Access, contact the GPO Access User Support Team, call toll free 1-888-293-6498; DC area 202-512-1530; fax at 202-512-1262; or via e-mail at *gpoaccess@gpo.gov.* The Support Team is available between 7:00 a.m. and 9:00 p.m. Eastern Time, Monday–Friday, except official holidays.

The annual subscription price for the **Federal Register** paper edition is $749 plus postage, or $808, plus postage, for a combined **Federal Register, Federal Register** Index and List of CFR Sections Affected (LSA) subscription; the microfiche edition of the **Federal Register** including the **Federal Register** Index and LSA is $165, plus postage. Six month subscriptions are available for one-half the annual rate. The prevailing postal rates will be applied to orders according to the delivery method requested. The price of a single copy of the daily **Federal Register,** including postage, is based on the number of pages: $11 for an issue containing less than 200 pages; $22 for an issue containing 200 to 400 pages; and $33 for an issue containing more than 400 pages. Single issues of the microfiche edition may be purchased for $3 per copy, including postage. Remit check or money order, made payable to the Superintendent of Documents, or charge to your GPO Deposit Account, VISA, MasterCard, American Express, or Discover. Mail to: New Orders, Superintendent of Documents, P.O. Box 371954, Pittsburgh, PA 15250-7954; or call toll free 1-866-512-1800, DC area 202-512-1800; or go to the U.S. Government Online Bookstore site, see *bookstore.gpo.gov.*

There are no restrictions on the republication of material appearing in the **Federal Register.**

How To Cite This Publication: Use the volume number and the page number. Example: 71 FR 12345.

Postmaster: Send address changes to the Superintendent of Documents, Federal Register, U.S. Government Printing Office, Washington DC 20402, along with the entire mailing label from the last issue received.

SUBSCRIPTIONS AND COPIES

PUBLIC

Subscriptions:

Paper or fiche	**202–512–1800**
Assistance with public subscriptions	**202–512–1806**

General online information **202–512–1530; 1–888–293–6498**

Single copies/back copies:

Paper or fiche	**202–512–1800**
Assistance with public single copies	**1–866–512–1800 (Toll-Free)**

FEDERAL AGENCIES

Subscriptions:

Paper or fiche	**202–741–6005**
Assistance with Federal agency subscriptions	**202–741–6005**

FEDERAL REGISTER WORKSHOP

THE FEDERAL REGISTER: WHAT IT IS AND HOW TO USE IT

FOR: Any person who uses the Federal Register and Code of Federal Regulations.

WHO: Sponsored by the Office of the Federal Register.

WHAT: Free public briefings (approximately 3 hours) to present:

1. The regulatory process, with a focus on the Federal Register system and the public's role in the development of regulations.

2. The relationship between the Federal Register and Code of Federal Regulations.

3. The important elements of typical Federal Register documents.

4. An introduction to the finding aids of the FR/CFR system.

WHY: To provide the public with access to information necessary to research Federal agency regulations which directly affect them. There will be no discussion of specific agency regulations.

WHEN: Tuesday, February 7, 2006
9:00 a.m.–Noon

WHERE: Office of the Federal Register
Conference Room, Suite 700
800 North Capitol Street, NW.
Washington, DC 20002

RESERVATIONS: (202) 741–6008

Printed on recycled paper.

Contents

Federal Register

Vol. 71, No. 22

Thursday, February 2, 2006

Agricultural Marketing Service
NOTICES
Agency information collection activities; proposals, submissions, and approvals, 5638–5639

Agriculture Department
See Agricultural Marketing Service
See Forest Service
See Natural Resources Conservation Service

Air Force Department
NOTICES
Meetings:
Air University Board of Visitors, 5650

Alcohol and Tobacco Tax and Trade Bureau
RULES
Alcohol, tobacco, and other excise taxes:
Small alcohol excise taxpayers; quarterly excise tax filing, 5598–5605
PROPOSED RULES
Alcohol, tobacco, and other excise taxes:
Small alcohol excise taxpayers; quarterly excise tax filing; cross-reference, 5629–5631

Army Department
See Engineers Corps

Commerce Department
See Foreign-Trade Zones Board
See International Trade Administration
See National Oceanic and Atmospheric Administration

Commodity Futures Trading Commission
RULES
Commodity Exchange Act:
Futures commission merchants and specified foreign currency forward and inventory capital charges; alternative market risk and credit risk capital charges, 5587–5596

Customs and Border Protection Bureau
NOTICES
Agency information collection activities; proposals, submissions, and approvals, 5676

Defense Department
See Air Force Department
See Engineers Corps
PROPOSED RULES
Right to Financial Privacy Act of 1978; obtaining information from financial institutions; practices and procedures, 5631–5637
NOTICES
Meetings:
Science Board task forces, 5649–5650

Education Department
NOTICES
Grants and cooperative agreements; availability, etc.:
Postsecondary education—
Federal TRIO Programs, 5651–5654

Energy Department
NOTICES
Electricity export and import authorizations, permits, etc.:
MAG Energy Solutions, Inc., 5654–5655
Environmental statements; notice of intent:
Hanford Site, Richland, WA; tank closure and waste management, 5655–5660
Reports and guidance documents; availability, etc.:
Electricity transmission congestion study considerations and possible designation of national interest electric transmission corridors; technical conference, 5660–5664

Engineers Corps
NOTICES
Environmental statements; availability, etc.:
Williamson and Johnson Counties, IL; new municipal water supply reservoir, 5650–5651

Environmental Protection Agency
RULES
Air quality implementation plans; approval and promulgation; various States:
Maryland, 5607–5619
NOTICES
Meetings:
Environmental Laboratory Advisory Board; teleconference, 5664
Reports and guidance documents; availability, etc.:
Environmental Managements Systems; position statement, 5664–5665

Executive Office for Immigration Review
NOTICES
Agency information collection activities; proposals, submissions, and approvals, 5690–5693

Executive Office of the President
See Presidential Documents

Farm Credit Administration
RULES
Corporate governance, 5740–5768

Federal Aviation Administration
RULES
Airworthiness directives:
Glaser-Dirks Flugzeugbau GmbH, 5584–5587
Raytheon, 5581–5584
PROPOSED RULES
Airworthiness directives:
Airbus, 5620–5623
Boeing, 5620, 5623–5626
Empresa Brasileira de Aeronautica S.A. (EMBRAER), 5626–5627
Airworthiness standards:
Aircraft engine standards for engine life-limited parts, 5770–5775

Federal Bureau of Investigation
NOTICES
Agency information collection activities; proposals, submissions, and approvals, 5693

Federal Election Commission
NOTICES
Meetings; Sunshine Act, 5665

Federal Highway Administration
NOTICES
Highway planning and construction; licenses, permits, approvals, etc.:
Legacy Parkway Project; Salt Lake City, UT, 5716–5717
Reports and guidance documents; availability, etc.:
Safe, Accountable, Flexible, Efficient Transportation Equity Act; implementation guidance, 5717–5718

Federal Maritime Commission
NOTICES
Complaints filed:
Lake Charles Harbor and Terminal District, 5665–5666

Federal Railroad Administration
NOTICES
Exemption petitions, etc.:
BNSF Railway Co., 5718

Federal Reserve System
NOTICES
Banks and bank holding companies:
Formations, acquisitions, and mergers, 5666
Permissible nonbanking activities, 5666

Federal Transit Administration
NOTICES
Grants and cooperative agreements; availability, etc.:
Over-the-Road Bus Accessibility Program, 5718–5727

Financial Management Service
See Fiscal Service

Fiscal Service
RULES
Financial Management Service:
District of Columbia, State, city, and county income or employment taxes; withholding by Federal agencies
Correction, 5737

Food and Drug Administration
NOTICES
Human drugs:
Best Pharmaceuticals for Children Act—
Pediatric studies; INVANZ , KEPPRA, TRILEPTAL, and ZYVOX; medical and clinical pharmacology review summaries; availability, 5667
Drug products withdrawn from sale for reasons other than safety or effectiveness—
CLARITIN (Loratadine) Hives Relief Syrup, 5667–5668
Patent extension; regulatory review period determinations—
ALOXI, 5668–5669
OMACOR, 5669–5670

Foreign-Trade Zones Board
NOTICES
Applications, hearings, determinations, etc.:
Ohio, 5645

Forest Service
NOTICES
Environmental statements; availability, etc.:
Hoosier National Forest, IN, 5639–5640
Environmental statements; notice of intent:
Uinta National Forest; UT; oil and gas leasing, 5640–5641
Meetings:
Eastern Washington Cascades Provincial and Yakima Provincial Advisory Committees; combined meeting, 5641
Oregon Coast Provincial Advisory Committee, 5641
Resource Advisory Committees—
North Central Idaho, 5642
Tehama County, 5641–5642

Health and Human Services Department
See Food and Drug Administration
See National Institutes of Health

Homeland Security Department
See Customs and Border Protection Bureau

Indian Affairs Bureau
NOTICES
Grants and cooperative agreements; availability, etc.:
Contract Support Funds and Indian-Self Determination Funds; distribution methodology, 5676–5679
Liquor and tobacco sale or distribution ordinance:
Pueblo of Nambe Reservation, NM, 5680–5681

Interior Department
See Indian Affairs Bureau
See Land Management Bureau
See National Park Service
See Reclamation Bureau

International Trade Administration
NOTICES
North American Free Trade Agreement (NAFTA); binational panel reviews:
Gray portland cement and clinker from—
Mexico, 5645
Oil country tubular goods from—
Mexico, 5645–5646
Scope rulings and anticircumvention determinations; list, 5646–5648

International Trade Commission
NOTICES
Import investigations:
Activated carbon from—
China, 5688
North American Free Trade Agreement (NAFTA)—
Modifications; probable effects, 5687–5688

Justice Department
See Executive Office for Immigration Review
See Federal Bureau of Investigation
NOTICES
Agency information collection activities; proposals, submissions, and approvals, 5689–5690

Land Management Bureau
NOTICES
Agency information collection activities; proposals, submissions, and approvals, 5681

National Highway Traffic Safety Administration
NOTICES
Grants and cooperative agreements; availability, etc.:
Racial profiling in traffic law enforcement; prohibition, 5727–5729

State traffic safety information systems improvements, 5729–5734

National Institutes of Health
NOTICES
Environmental statements; record of decision:
National Emerging Infectious Diseases Laboratories, 5670–5675
Meetings:
Genetics, Health, and Society, Secretary's Advisory Committee, 5675
National Center for Research Resources, 5676

National Oceanic and Atmospheric Administration
NOTICES
Meetings:
Gulf of Mexico Fishery Management Council, 5648
North Pacific Fishery Management Council, 5648
Pacific Fishery Management Council, 5649

National Park Service
NOTICES
Meetings:
Native American Graves Protection and Repatriation Review Committee, 5681–5682
Native American human remains and associated funerary objects:
Denver Museum of Nature & Science, CO, 5682–5683
Horner Collection, Oregon State University, Corvallis, OR, 5683–5684
Renton Historical Society and Museum, Renton, WA, 5684

National Science Foundation
NOTICES
Meetings:
National Science Board, 5693–5694

Natural Resources Conservation Service
NOTICES
Environmental statements; record of decision:
Williamson River Delta Restoration Project, OR, 5642–5644
Reports and guidance documents; availability, etc.:
National Handbook of Conservation Practices, 5644

Nuclear Regulatory Commission
NOTICES
Environmental statements; availability, etc.:
Monticello Nuclear Generating Plant, 5694–5695
Regulatory guides; issuance, availability, and withdrawal, 5695–5697

Presidential Documents
PROCLAMATIONS
Special observances:
Fourth Anniversary of USA Freedom Corps (Proc. 7977), 5579–5580

Public Debt Bureau
See Fiscal Service

Reclamation Bureau
NOTICES
Agency information collection activities; proposals, submissions, and approvals, 5684–5687

Saint Lawrence Seaway Development Corporation
RULES
Seaway regulations and rules:
Miscellaneous amendments, 5605–5607

Securities and Exchange Commission
RULES
Electronic Data Gathering, Analysis, and Retrieval System (EDGAR):
Filer Manual; revisions, 5596–5598
NOTICES
Meetings; Sunshine Act, 5697

State Department
PROPOSED RULES
Exchange Visitor Program:
Au Pair Exchange Programs, 5627–5629
NOTICES
Grants and cooperative agreements; availability, etc.:
Summer Institute for German Student Leaders in Education, 5697–5703

Surface Transportation Board
NOTICES
Railroad services abandonment:
BNSF Railway Co., 5734
Norfolk Southern Railway Co., 5734–5735

Transportation Department
See Federal Aviation Administration
See Federal Highway Administration
See Federal Railroad Administration
See Federal Transit Administration
See National Highway Traffic Safety Administration
See Saint Lawrence Seaway Development Corporation
See Surface Transportation Board
NOTICES
Aviation proceedings:
Agreements filed; weekly receipts, 5703–5704
Certificates of public convenience and necessity and foreign air carrier permits; weekly applications, 5704–5705
Grants and cooperative agreements; availability, etc.:
Small Community Air Service Development Program, 5705–5716

Treasury Department
See Alcohol and Tobacco Tax and Trade Bureau
See Fiscal Service

Veterans Affairs Department
NOTICES
Agency information collection activities; proposals, submissions, and approvals, 5735–5736

Separate Parts In This Issue

Part II
Farm Credit Administration, 5740–5768

Part III

Transportation Department, Federal Aviation Administration, 5770–5775

Reader Aids

Consult the Reader Aids section at the end of this issue for phone numbers, online resources, finding aids, reminders, and notice of recently enacted public laws.

To subscribe to the Federal Register Table of Contents LISTSERV electronic mailing list, go to http://listserv.access.gpo.gov and select Online mailing list archives, FEDREGTOC-L, Join or leave the list (or change settings); then follow the instructions.

CFR PARTS AFFECTED IN THIS ISSUE

A cumulative list of the parts affected this month can be found in the Reader Aids section at the end of this issue.

3 CFR

Proclamations:

7977 5579

12 CFR

611 5740
612 5740
614 5740
615 5740
618 5740
619 5740
620 5740
630 5740

14 CFR

39 (2 documents) 5581, 5584

Proposed Rules:

33 5770
39 (4 documents) ... 5620, 5623, 5626

17 CFR

1 5587
145 5587
147 5587
232 5596

22 CFR

Proposed Rules:

62 5627

27 CFR

19 5598
24 5598
25 5598
26 5598
70 5598

Proposed Rules:

19 5629
24 5629
25 5629
26 5629
70 5629

31 CFR

215 5737

32 CFR

Proposed Rules:

275 5631

33 CFR

401 5605

40 CFR

52 5607

Federal Register
Vol. 71, No. 22
Thursday, February 2, 2006

Presidential Documents

Title 3—

The President

Proclamation 7977 of January 30, 2006

Fourth Anniversary of USA Freedom Corps, 2006

By the President of the United States of America

A Proclamation

Americans enjoy great liberty and prosperity, and with these blessings comes an obligation to reach out to those in need. Over the past 4 years, USA Freedom Corps has worked to rally America's armies of compassion and bring together individuals and organizations committed to volunteer service. More than 65 million people volunteered in 2005, an increase of 6.5 million since 2002. As we celebrate the fourth anniversary of USA Freedom Corps, we recognize the many Americans who have stepped forward to help others, and we underscore our commitment to serving our Nation and people around the world.

USA Freedom Corps was created to build on the countless acts of service, sacrifice, and generosity that followed the terrorist attacks of September 11, 2001. In the wake of the devastating tsunami of 2004 and hurricanes of 2005, Americans have continued to demonstrate that the true strength of our Nation lies in the hearts and souls of our citizens. By reaching out to aid the victims of these tragedies, people across our country helped rebuild shattered lives and communities. Their acts of service again demonstrated that by loving our neighbors as ourselves, we can offer hope and healing to those who suffer.

USA Freedom Corps is dedicated to expanding volunteer service and extending the goodwill of the American people. To help support our communities, respond to crises at home, and spread compassion around the globe, USA Freedom Corps works to strengthen public service programs such as the Peace Corps, Senior Corps, AmeriCorps, and Citizen Corps. USA Freedom Corps encourages and promotes the good work of non-profit, faith-based, and community organizations. Through the President's Greeter Program and the President's Volunteer Service Award, USA Freedom Corps and the President's Council on Service and Civic Participation recognize Americans who have made serving their neighbors a central part of their lives. USA Freedom Corps has also created a comprehensive network of volunteer opportunities to help more Americans find ways to get involved in serving their communities.

Through USA Freedom Corps, my Administration will continue to build a culture of service, citizenship, and responsibility in our country. To learn more about opportunities for volunteering, citizens can visit the USA Freedom Corps website at www.volunteer.gov. By working together for a cause greater than self, we can strengthen our Nation, one person, one neighborhood, and one community at a time.

NOW, THEREFORE, I, GEORGE W. BUSH, President of the United States of America, by virtue of the authority vested in me by the Constitution and laws of the United States, do hereby proclaim the Fourth Anniversary of USA Freedom Corps. I call upon the citizens of this great country to find ways to volunteer and help their fellow Americans. I commend the efforts of USA Freedom Corps and all those who have already answered the call to serve, and I encourage all Americans to donate their time, energy, and talents to the work ahead.

IN WITNESS WHEREOF, I have hereunto set my hand this thirtieth day of January, in the year of our Lord two thousand six, and of the Independence of the United States of America the two hundred and thirtieth.

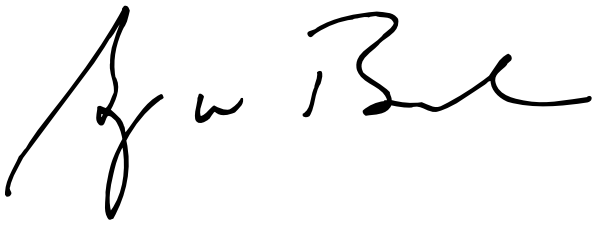

[FR Doc. 06–1035
Filed 2–1–06; 8:45 am]
Billing code 3195–01–P

Rules and Regulations

Federal Register

Vol. 71, No. 22

Thursday, February 2, 2006

This section of the FEDERAL REGISTER contains regulatory documents having general applicability and legal effect, most of which are keyed to and codified in the Code of Federal Regulations, which is published under 50 titles pursuant to 44 U.S.C. 1510.

The Code of Federal Regulations is sold by the Superintendent of Documents. Prices of new books are listed in the first FEDERAL REGISTER issue of each week.

DEPARTMENT OF TRANSPORTATION

Federal Aviation Administration

14 CFR Part 39

[Docket No. FAA–2005–23221; Directorate Identifier 2005–CE–51–AD; Amendment 39–14459; AD 2006–02–51]

RIN 2120–AA64

Airworthiness Directives; Raytheon Aircraft Company Model 390 Airplanes

AGENCY: Federal Aviation Administration (FAA), DOT.

ACTION: Final rule; request for comments.

SUMMARY: The FAA is adopting a new airworthiness directive (AD) for certain Raytheon Aircraft Company Model 390 airplanes. This AD contains the same information as emergency AD 2006–02–51 and publishes the action in the **Federal Register**. This AD requires you to visually inspect the hydraulic tube assembly (P/N 390–580035–0001 or P/N 390–580035–0005) and the clamp (P/N MS21919WCJ6 or P/N MS21919WCJ7) (or FAA-approved equivalent part numbers), as specified in the service information; replace the clamp at each inspection; replace the hydraulic tube assembly immediately if any of the problems identified in the service bulletin are found; and report the results of each inspection or replacement to the FAA. This AD results from failure of the hydraulic tube assembly, which caused in-flight loss of hydraulic fluid. We are issuing this AD to prevent failure of the hydraulic tube assembly and consequent leaking of hydraulic fluid. This failure could result in loss of hydraulic system functions and risk of fire because of flammable fluid leakage in the engine nacelle and lead to loss of control of the airplane.

DATES: This AD becomes effective on February 2, 2006. As of February 2, 2006, the Director of the Office of the Federal Register approved the incorporation by reference of certain publications listed in the regulation. We must receive any comments on this AD by March 2, 2006.

ADDRESSES: Use one of the following to submit comments on this AD:

- *DOT Docket Web site:* Go to *http://dms.dot.gov* and follow the instructions for sending your comments electronically.
- *Government-wide rulemaking Web site:* Go to *http://www.regulations.gov* and follow the instructions for sending your comments electronically.
- *Mail:* Docket Management Facility; U.S. Department of Transportation, 400 Seventh Street, SW., Nassif Building, Room PL–401, Washington, DC 20590–0001.
- *Fax:* 1–202–493–2251.
- *Hand Delivery:* Room PL–401 on the plaza level of the Nassif Building, 400 Seventh Street, SW., Washington, DC, between 9 a.m. and 5 p.m., Monday through Friday, except Federal holidays.

To view the comments to this AD, go to *http://dms.dot.gov.* The docket number is FAA–2005–23221; Directorate Identifier 2005–CE–51–AD.

To get the service information identified in this AD, contact Raytheon Aircraft Company, P.O. Box 85, Wichita, Kansas 67201–0085; telephone: (800) 625–7043.

FOR FURTHER INFORMATION CONTACT: James P. Galstad, Propulsion Aerospace Engineer, ACE 116W, Wichita Aircraft Certification Office, 1801 Airport Road, Room 100, Wichita, Kansas 67209; telephone: 316–946–4135; facsimile: 316–946–4107.

SUPPLEMENTARY INFORMATION:

Discussion

What Events Have Caused This AD?

The FAA received reports of four failures of the part number (P/N) 390–580035–0001 hydraulic tube assembly located on the left engine assembly of Raytheon Model 390 airplanes. The failures resulted in in-flight loss of hydraulic fluid. The tube is installed between the hydraulic pump and the hydraulic pulsation damper and carries hydraulic pump output pressure.

The latest failure occurred on an airplane with 83 hours time-in-service on the hydraulic tube assembly.

On January 19, 2006, the FAA issued emergency AD 2006–02–51 to require you to visually inspect the hydraulic tube assembly (P/N 390–580035–0001 or P/N 390–580035–0005) and the clamp (P/N MS21919WCJ6 or P/N MS21919WCJ7) (or FAA-approved equivalent part numbers), as specified in the service information; replace the clamp at each inspection; replace the hydraulic tube assembly immediately if any of the problems identified in the service bulletin are found; and report the results of each inspection or replacement to the FAA.

Why Is It Important To Publish This AD?

The FAA found that immediate corrective action was required, that notice and opportunity for prior public comment were impracticable and contrary to the public interest, and that good cause existed to make the AD effective immediately by individual letters issued on January 19, 2006, to all known U.S. operators of the affected Raytheon Aircraft Company Model 390 airplanes. These conditions still exist, and the AD is published in the **Federal Register** as an amendment to section 39.13 of the Federal Aviation Regulations (14 CFR 39.13) to make it effective to all persons.

Comments Invited

Will I Have the Opportunity To Comment Before You Issue the Rule?

This AD is a final rule that involves requirements affecting flight safety and was not preceded by notice and an opportunity for public comment; however, we invite you to submit any written relevant data, views, or arguments regarding this AD. Send your comments to an address listed under **ADDRESSES.** Include the docket number, ''FAA–2005–23221; Directorate Identifier 2005–CE–51–AD'' at the beginning of your comments. We will post all comments we receive, without change, to *http://dms.dot.gov,* including any personal information you provide. We will also post a report summarizing each substantive verbal contact with FAA personnel concerning this AD.

Using the search function of our docket Web site, anyone can find and read the comments received into any of our dockets, including the name of the individual who sent the comment (or signed the comment on behalf of an association, business, labor union, etc.). This is docket number FAA–2005–

23221; Directorate Identifier 2005–CE–51–AD. You may review the DOT's complete Privacy Act Statement in the **Federal Register** published on April 11, 2000 (65 FR 19477–78) or you may visit *http://dms.dot.gov.*

Are There Any Specific Portions of This AD I Should Pay Attention To?

We specifically invite comments on the overall regulatory, economic, environmental, and energy aspects of this AD. If you contact us through a nonwritten communication and that contact relates to a substantive part of this AD, we will summarize the contact and place the summary in the docket. We will consider all comments received by the closing date and may amend this AD in light of those comments and contacts.

Docket Information

Where Can I Go To View the Docket Information?

You may view the AD docket that contains the AD, any comments received, and any final disposition in person at the DMS Docket Offices between 9 a.m. and 5 p.m. (eastern standard time), Monday through Friday, except Federal holidays. The Docket Office (telephone 1–800–647–5227) is located on the plaza level of the Department of Transportation NASSIF Building at the street address stated in **ADDRESSES.** You may also view the AD docket on the Internet at *http://dms.dot.gov.* The comments will be available in the AD docket shortly after the DMS receives them.

Authority for This Rulemaking

What Authority Does FAA Have for Issuing This Rulemaking Action?

Title 49 of the United States Code specifies the FAA's authority to issue rules on aviation safety. Subtitle I, Section 106 describes the authority of the FAA Administrator. Subtitle VII, Aviation Programs, describes in more detail the scope of the agency's authority.

We are issuing this rulemaking under the authority described in Subtitle VII, Part A, Subpart III, Section 44701, ''General requirements.'' Under that section, Congress charges the FAA with promoting safe flight of civil aircraft in air commerce by prescribing regulations for practices, methods, and procedures the Administrator finds necessary for safety in air commerce. This regulation is within the scope of that authority because it addresses an unsafe condition that is likely to exist or develop on products identified in this AD.

Regulatory Findings

Will This AD Impact Various Entities?

We have determined that this AD will not have federalism implications under Executive Order 13132. This AD will not have a substantial direct effect on the States, on the relationship between the national government and the States, or on the distribution of power and responsibilities among the various levels of government.

Will This AD Involve a Significant Rule or Regulatory Action?

For the reasons discussed above, I certify that this AD:

1. Is not a ''significant regulatory action'' under Executive Order 12866;

2. Is not a ''significant rule'' under the DOT Regulatory Policies and Procedures (44 FR 11034, February 26, 1979); and

3. Will not have a significant economic impact, positive or negative, on a substantial number of small entities under the criteria of the Regulatory Flexibility Act.

We prepared a summary of the costs to comply with this AD (and other information as included in the Regulatory Evaluation) and placed it in the AD Docket. You may get a copy of this summary by sending a request to us at the address listed under **ADDRESSES.** Include ''Docket No. FAA–2005–23221; Directorate Identifier 2005–CE–51–AD'' in your request.

List of Subjects in 14 CFR Part 39

Air transportation, Aircraft, Aviation safety, Incorporation by reference, Safety.

Adoption of the Amendment

■ Accordingly, under the authority delegated to me by the Administrator, the Federal Aviation Administration amends part 39 of the Federal Aviation Regulations (14 CFR part 39) as follows:

PART 39—AIRWORTHINESS DIRECTIVES

■ 1. The authority citation for part 39 continues to read as follows:

Authority: 49 U.S.C. 106(g), 40113, 44701.

§ 39.13 [Amended]

■ 2. The FAA amends § 39.13 by adding the following new airworthiness directive (AD):

2006–02–51 Raytheon Aircraft Company: Amendment 39–14459; Docket No. FAA–2005–23221; Directorate Identifier 2005–CE–51–AD.

When Does This AD Become Effective?

(a) This AD becomes effective on February 2, 2006.

Are Any Other ADs Affected by This Action?

(b) None.

What Airplanes Are Affected by This AD?

(c) This AD affects the following Model 390 airplanes that are certificated in any category:

(1) Serial numbers RB–1 through RB–49 that are equipped with Kit 390–9100 that incorporates part number (P/N) 390–580035–0001 (or FAA-approved equivalent part number);

(2) Serial numbers RB–50 through RB–141; and

(3) Serial numbers RB–143 through RB–148.

What Is the Unsafe Condition Presented in This AD?

(d) This AD is the result of failure of the hydraulic tube assembly, which caused in-flight loss of hydraulic fluid. We are issuing this AD to prevent failure of the hydraulic tube assembly and the clamp and consequent leaking of hydraulic fluid. This failure could result in loss of hydraulic system functions and risk of fire because of flammable fluid leakage in the engine nacelle and lead to loss of control of the airplane.

What Must I Do To Address This Problem?

(e) To address this problem, you must do the following:

Actions	Compliance	Procedures
(1) Perform a one-time visual inspection of the hydraulic tube assembly and clamp using Raytheon Safety Communique No. 267, dated January 2006. Perform repetitive detailed inspections thereafter per Raytheon Mandatory Service Bulletin No. SB 29–3771, dated January, 2006. (i) The tube assembly part number is P/N 390–580035–0001 or P/N 390–580035–0005). (ii) The clamp part number is P/N MS21919WCJ6 or P/N MS21919WCJ7.	Visually inspect before further flight after February 2, 2006 (the effective date of this AD), except for those who received emergency AD 2006–02–51, issued January 19, 2006, unless already done. Perform the detailed inspection within 10 hours time-in-service (TIS) after February 2, 2006 (the effective date of this AD), except for those who received emergency AD 2006–02–51, issued January 19, 2006, unless already done. Inspect thereafter at intervals not to exceed 50 hours TIS. You may perform the detailed inspection before further flight instead of the visual inspection. Emergency AD 2006–02–51 contained the requirements of this amendment and became effective immediately upon receipt.	For the visual inspection, use Raytheon Safety Communique No. 267, dated January, 2006. For the detailed inspections, use the procedures in Raytheon Mandatory Service Bulletin No. SB 29–3771, dated January, 2006.
(2) Replace the hydraulic tube assembly (P/N 390–580035–0001 or P/N 390–580035–0005) and the clamp (P/N MS21919WCJ6 or P/N MS21919WCJ7) (or FAA-approved equivalent part numbers) with new P/N 390–580035–0001 or P/N 390–580035–0005 and P/N MS21919WCJ7 (or FAA-approved equivalent part numbers) or used parts.	Replace the clamp at each inspection. Replace the tube assembly prior to further flight after any inspection where evidence of chafing, excessive vibration, wear, deterioration, or hydraulic fluid leakage is found. Refer to SB 29–3771, dated January, 2006 for acceptance/rejection information for the tube assembly.	Follow the procedures in Raytheon Mandatory Service Bulletin No. SB 29–3771, dated January, 2006.
(3) Report the results to FAA of each inspection or replacement required in paragraphs (e)(1) and (e)(2) of this AD. The Office of Management and Budget (OMB) approved the information collection requirements contained in this regulation under the provisions of the Paperwork Reduction Act of 1980 (44 U.S.C. 3501 and those following sections) and assigned OMB Control Number 2120–0056.	Within 10 days after the inspection or replacement or within 10 days after February 2, 2006 (the effective date of this AD), except for those who received emergency AD 2006–02–51, issued January 19, 2006, whichever occurs later.	Include in your report the airplane serial number, the TIS of the airplane, and the TIS of the hydraulic tube assembly (P/N 390–580035–0001 or P/N 390–580035–0005) (or FAA-approved equivalent part number). E-mail/send your report to James P. Galstad, Propulsion Aerospace Engineer, ACE 116W, Wichita Aircraft Certification Office, 1801 Airport Road, Room 100, Wichita, Kansas 67209; e-mail: *james.galstad@faa.gov*; telephone: 316–946–4135; facsimile: 316–946–4107.

(4) *Repositioning and Special Flight Permits:* You may operate the airplane to return/position the airplane to a home base, hangar, maintenance facility, etc., for the purpose of doing only the visual inspection required by this AD.

(i) Operation of up to 10 hours time-in-service (TIS) is allowed for visual inspection repositioning flight(s) provided the flight(s) occur(s) no later than 30 days after January 19, 2006. This is a one-time provision.

(ii) Special flight permits are also allowed for the visual inspection required for this AD. Use the procedures in 14 CFR part 39.

(iii) Special flight permits are prohibited for the detailed inspections and possible replacements required by this AD.

(iv) For any repositioning flight or special flight permit for the visual inspection, you must operate with only the PILOT AND ANY ADDITIONAL FLIGHT CREW MEMBER REQUIRED FOR SAFE OPERATION.

(5) *Disposal of Parts:* Return replaced hydraulic tube assembly (P/N 390–580035–0001 or P/N 390–580035–0005) to Raytheon Aircraft Company per SB 29–3771 and dispose of the P/N MS21919WCJ6 or P/N MS21919WCJ6 clamp (or FAA-approved equivalent part numbers) following 14 CFR 43.10. Ship any replaced hydraulic tube and dispose of the clamp prior to returning the aircraft to service.

(6) *Parts Manufacturer Approval (PMA):* 14 CFR 21.303 allows for replacement parts through PMA. The phrase ''or FAA-approved equivalent part number(s)'' in this AD is intended to signify those parts that are PMA approved through identicality to the design of the part under the type certificate and replacement parts to correct the unsafe condition under PMA (other than identicality). If parts are installed that are identical to the unsafe parts, then the corrective actions of the AD affect these parts also. In addition, equivalent replacement parts to correct the unsafe condition under PMA (other than identicality) may also be installed provided they meet current airworthiness standards, which include those actions cited in this AD.

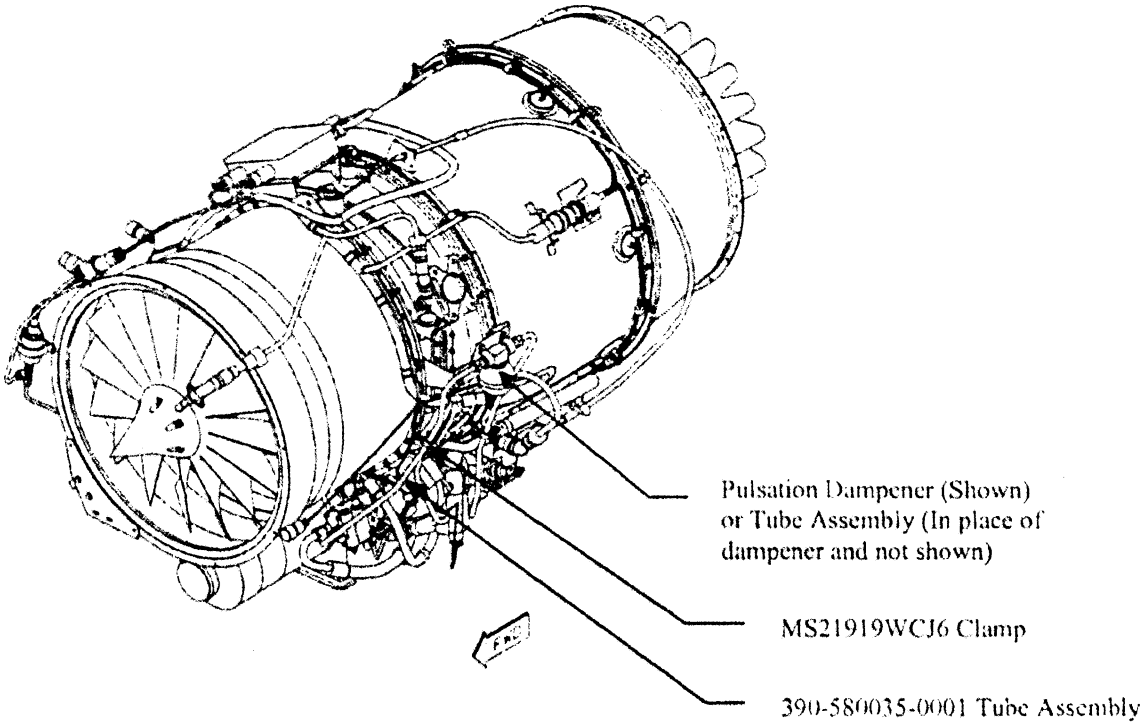

Figure 1. Hydraulic Tube Assembly with Clamp on Left Hand Engine.

May I Request an Alternative Method of Compliance?

(f) You may request a different method of compliance or a different compliance time for this AD by following the procedures in 14 CFR 39.19. Unless FAA authorizes otherwise, send your request to your principal inspector. The principal inspector may add comments and will send your request to the Manager, Wichita Aircraft Certification Office, FAA. For information on any already approved alternative methods of compliance, contact James P. Galstad, Propulsion Aerospace Engineer, ACE 116W, Wichita Aircraft Certification Office, 1801 Airport Road, Room 100, Wichita, Kansas 67209; telephone: 316–946–4135; facsimile: 316–946–4107.

Does This AD Incorporate Any Material by Reference?

(g) You must do the actions required by this AD following the instructions in Raytheon Mandatory Service Bulletin No. SB 29–3771, dated January, 2006; and Raytheon Safety Communique No. 267, dated January 2006. The Director of the Federal Register approved the incorporation by reference of this service information in accordance with 5 U.S.C. 552(a) and 1 CFR part 51. To get a copy of this service information, contact Raytheon Aircraft Company, P.O. Box 85, Wichita, Kansas 67201–0085; telephone: (800) 625–7043. To review copies of this service information, go to the National Archives and Records Administration (NARA). For information on the availability of this material at NARA, go to: *http://www.archives.gov/federal_register/code_of_federal_regulations/ibr_locations.html* or call (202) 741–6030. To view the AD docket, go to the Docket Management Facility; U.S. Department of Transportation, 400 Seventh Street, SW., Nassif Building, Room PL–401, Washington, DC 20590–001 or on the Internet at *http://dms.dot.gov*. The docket number is FAA–2005–23221; Directorate Identifier 2005–CE–51–AD.

Issued in Kansas City, Missouri, on January 26, 2006.

David R. Showers,

Acting Manager, Small Airplane Directorate, Aircraft Certification Service.

[FR Doc. 06–921 Filed 2–1–06; 8:45 am]

BILLING CODE 4910–13–P

DEPARTMENT OF TRANSPORTATION

Federal Aviation Administration

14 CFR Part 39

[Docket No. FAA–2005–22157; Directorate Identifier 2005–CE–44–AD; Amendment 39–14464; AD 2006–02–12]

RIN 2120–AA64

Airworthiness Directives; Glaser-Dirks Flugzeugbau GmbH Models DG–100 and DG–400 Sailplanes and DG Flugzeugbau GmbH Models DG–500 Elan Series and DG–500M Sailplanes

AGENCY: Federal Aviation Administration (FAA), DOT.

ACTION: Final rule.

SUMMARY: The FAA adopts a new airworthiness directive (AD) for all Glaser-Dirks Flugzeugbau GmbH Models DG–100 and DG–400 sailplanes and certain DG Flugzeugbau GmbH Models DG–500 Elan Series and DG–500M sailplanes. This AD requires you to modify or replace the complete rudder mount assembly and ensure that the securing washer, castellated nut, and new split pins are installed. This AD results from mandatory continuing airworthiness information (MCAI) issued by the airworthiness authority for

Germany. We are issuing this AD to prevent the universal bearing of the lower rudder mounting from slipping out of the bearing support. The universal bearing slipping out could result in the rudder separating from its support. This failure could lead to loss of sailplane control during flight operations.

DATES: This AD becomes effective on March 15, 2006.

As of March 15, 2006, the Director of the Federal Register approved the incorporation by reference of certain publications listed in the regulation.

ADDRESSES: To get the service information identified in this AD, contact DG Flugzeugbau, Postbox 41 20, D–76625 Bruchsal, Federal Republic of Germany; telephone: 011–49 7257–890; facsimile: 011–49 7257–8922.

To view the AD docket, go to the Docket Management Facility; U.S. Department of Transportation, 400 Seventh Street, SW., Nassif Building, Room PL–401, Washington, DC 20590–001 or on the Internet at *http://dms.dot.gov*. The docket number is FAA–2005–22157; Directorate Identifier 2005–CE–44–AD.

FOR FURTHER INFORMATION CONTACT: Gregory Davison, Aerospace Engineer, FAA, Small Airplane Directorate, ACE–112, Room 301, 901 Locust, Kansas City, Missouri 64106; telephone: 816–329–4130; facsimile: 816–329–4090.

SUPPLEMENTARY INFORMATION:

Discussion

What events have caused this AD? The Luftfahrt-Bundesamt (LBA), which is the airworthiness authority for Germany, recently notified FAA that an unsafe condition may exist on all Glaser-Dirks Flugzeugbau GmbH Models DG–100 and DG–400 sailplanes and certain DG Flugzeugbau GmbH Models DG–500 Elan Series and DG–500M sailplanes. The LBA reports that on a Model DG–100 sailplane the universal bearing of the lower rudder mounting slipped out of the bearing support and the rudder fell out. Further, the LBA reports that this kind of failure may occur on other DG series sailplanes.

What is the potential impact if FAA took no action? The universal bearing slipping out could result in the rudder separating from its support. This failure could lead to loss of sailplane control during flight operations.

Has FAA taken any action to this point? We issued a proposal to amend part 39 of the Federal Aviation Regulations (14 CFR part 39) to include an AD that would apply to all Glaser-Dirks Flugzeugbau GmbH Models DG–100 and DG–400 sailplanes and certain DG Flugzeugbau GmbH Models DG–500 Elan Series and DG–500M sailplanes. This proposal was published in the **Federal Register** as a notice of proposed rulemaking (NPRM) on October 5, 2005 (70 FR 58110). The NPRM proposed to require you to modify or replace the complete rudder mount assembly and ensure that the securing washer, castellated nut, and new split pins are installed.

Comments

Was the public invited to comment? We provided the public the opportunity to participate in developing this AD. We received no comments on the proposal or on the determination of the cost to the public.

Conclusion

What is FAA's final determination on this issue? We have carefully reviewed the available data and determined that air safety and the public interest require adopting the AD as proposed except for minor editorial corrections. We have determined that these minor corrections:

—Are consistent with the intent that was proposed in the NPRM for correcting the unsafe condition; and

—Do not add any additional burden upon the public than was already proposed in the NPRM.

Changes to 14 CFR Part 39—Effect on the AD

How does the revision to 14 CFR part 39 affect this AD? On July 10, 2002, the FAA published a new version of 14 CFR part 39 (67 FR 47997, July 22, 2002), which governs the FAA's AD system. This regulation now includes material that relates to altered products, special flight permits, and alternative methods of compliance. This material previously was included in each individual AD. Since this material is included in 14 CFR part 39, we will not include it in future AD actions.

Costs of Compliance

How many sailplanes does this AD impact? We estimate that this AD affects 75 sailplanes in the U.S. registry.

What is the cost impact of this AD on owners/operators of the affected sailplanes? We estimate the following costs to do the replacement of the complete rudder mount assembly. We have no way of determining the number of sailplanes that may need this replacement:

Labor cost	Parts cost	Total cost per sailplane
2 work hours × $65 = $130	$265	$395

We estimate the following costs to do the modification of the complete rudder mount assembly. We have no way of determining the number of sailplanes that may need this modification:

Labor cost	Parts cost	Total cost per sailplane
3 work hours × $65 = $195	Not applicable	$195

Authority for This Rulemaking

What authority does FAA have for issuing this rulemaking action? Title 49 of the United States Code specifies the FAA's authority to issue rules on aviation safety. Subtitle I, Section 106 describes the authority of the FAA Administrator. Subtitle VII, Aviation Programs, describes in more detail the scope of the agency's authority.

We are issuing this rulemaking under the authority described in Subtitle VII, Part A, Subpart III, Section 44701, ''General requirements.'' Under that section, Congress charges the FAA with promoting safe flight of civil aircraft in air commerce by prescribing regulations for practices, methods, and procedures the Administrator finds necessary for safety in air commerce. This regulation is within the scope of that authority

because it addresses an unsafe condition that is likely to exist or develop on products identified in this AD.

Regulatory Findings

Will this AD impact various entities? We have determined that this AD will not have federalism implications under Executive Order 13132. This AD will not have a substantial direct effect on the States, on the relationship between the national government and the States, or on the distribution of power and responsibilities among the various levels of government.

Will this AD involve a significant rule or regulatory action? For the reasons discussed above, I certify that this AD:

1. Is not a ''significant regulatory action'' under Executive Order 12866;

2. Is not a ''significant rule'' under the DOT Regulatory Policies and Procedures (44 FR 11034, February 26, 1979); and

3. Will not have a significant economic impact, positive or negative, on a substantial number of small entities under the criteria of the Regulatory Flexibility Act.

We prepared a summary of the costs to comply with this AD (and other information as included in the Regulatory Evaluation) and placed it in the AD Docket. You may get a copy of this summary by sending a request to us at the address listed under **ADDRESSES**. Include ''Docket No. FAA–2005–22157; Directorate Identifier 2005–CE–44–AD'' in your request.

List of Subjects in 14 CFR Part 39

Air transportation, Aircraft, Aviation safety, Incorporation by reference, Safety.

Adoption of the Amendment

■ Accordingly, under the authority delegated to me by the Administrator, the Federal Aviation Administration amends part 39 of the Federal Aviation Regulations (14 CFR part 39) as follows:

PART 39—AIRWORTHINESS DIRECTIVES

■ 1. The authority citation for part 39 continues to read as follows:

Authority: 49 U.S.C. 106(g), 40113, 44701.

§ 39.13 [Amended]

■ 2. FAA amends § 39.13 by adding a new AD to read as follows:

2006–02–12 DG Flugzeugbau GmbH and Glaser-Dirks Flugzeugbau GmbH: Amendment 39–14464; Docket No. FAA–2005–22157; Directorate Identifier 2005–CE–44–AD.

When Does This AD Become Effective?

(a) This AD becomes effective on March 15, 2006.

What Other ADs Are Affected by This Action?

(b) None.

What Sailplanes Are Affected by This AD?

(c) This AD affects the following sailplane models and serial numbers that are certificated in any category:

Model	Serial numbers
DG–100	All Serial Numbers.
DG–400	All Serial Numbers.
DG–500	All Serial Numbers Through 5E23.
Elan Series	
DG–500M	All Serial Numbers Through 5E23.

What Is the Unsafe Condition Presented in This AD?

(d) This AD is the result of mandatory continuing airworthiness information (MCAI) issued by the airworthiness authority for Germany. The actions specified in this AD are intended to prevent the universal bearing of the lower rudder mounting from slipping out of the bearing support. The universal bearing slipping out could result in the rudder separating from its support. This failure could lead to loss of sailplane control during flight operations.

(e) To address this problem, you must do the following:

Actions	Compliance	Procedures
(1) Modify or replace the complete rudder mounting assembly.	Within the next 25 hours time-in-service (TIS) after March 15, 2006 (the effective date of this AD), unless already done.	Follow DG Flugzeugbau GmbH Technical Note No. 301/23 issue 2, 323/14 issue 2, 348/18 issue 2, 359/21 issue 2, 370/9 issue 2, 826/44 issue 2, 843/21 issue 2, 866/10 issue 2, dated June 11, 2004, amended July 7, 2004.
(2) Ensure that the securing washer, castellated nut, and split pins are installed as specified by the DG Flugzeugbau GmbH Technical Note No. 301/23 issue 2, 323/14 issue 2, 348/18 issue 2, 359/21 issue 2, 370/9 issue 2, 826/44 issue 2, 370/9 issue, 2, 826/44 issue 2, 843/21 issue 2, 866/10 issue 2, dated June 11, 2004, amended July 7, 2004.	Before further flight after the modification or replacement of the mounting assembly required by paragraph (e)(1) of this AD.	Follow DG Flugzeugbau GmbH Technical Note No. 301/23 issue 2, 323/14 issue 2, 348/18 issue 2, 359/21 issue 2, 370/9 issue 2, 826/44 issue 2, 843/21 issue 2, 866/10 issue 2, dated June 11, 2004, amended July 7, 2004.

May I Request an Alternative Method of Compliance?

(f) You may request a different method of compliance or a different compliance time for this AD by following the procedures in 14 CFR 39.19. Unless FAA authorizes otherwise, send your request to your principal inspector. The principal inspector may add comments and will send your request to the Manager, Standards Office, Small Airplane Directorate, FAA. For information on any already approved alternative methods of compliance, contact Gregory Davison, Aerospace Engineer, FAA, Small Airplane Directorate, ACE–112, Room 301, 901 Locust, Kansas City, Missouri 64106; telephone: 816–329–4130; facsimile: 816–329–4090.

Is There Other Information That Relates to This Subject?

(g) German AD Number D–2004–348R1, dated September 16, 2004, also addresses the subject of this AD.

Does This AD Incorporate Any Material by Reference?

(h) You must do the actions required by this AD following the instructions in DG Flugzeugbau GmbH Technical Note No. 301/23 issue 2, 323/14 issue 2, 348/18 issue 2, 359/21 issue 2, 370/9 issue 2, 826/44 issue 2, 843/21 issue 2, 866/10 issue 2, dated June 11, 2004, amended July 7, 2004 (LBA-approved). The Director of the Federal Register approved the incorporation by reference of this service bulletin in accordance with 5 U.S.C. 552(a) and 1 CFR part 51. To get a copy of this service information, contact DG Flugzeugbau, Postbox 41 20, D–76625 Bruchsal, Federal Republic of Germany; telephone: 011–49 7257–890; facsimile: 011–49 7257–8922. To review copies of this service information, go to the National Archives and Records Administration (NARA). For information on the availability of this material at NARA, go to: *http://www.archives.gov/federal_register/code_of_federal_regulations/ibr_locations.html* or call (202) 741–6030. To view the AD docket, go to the Docket Management Facility; U.S. Department of Transportation, 400 Seventh Street, SW., Nassif Building, Room PL–401, Washington, DC 20590–001 or on the Internet at *http://*

dms.dot.gov. The docket number is FAA–2005–22157; Directorate Identifier 2005–CE–44–AD.

Issued in Kansas City, Missouri, on January 20, 2006.

John Colomy,

Acting Manager, Small Airplane Directorate, Aircraft Certification Service.

[FR Doc. 06–735 Filed 2–1–06; 8:45 am]

BILLING CODE 4910–13–P

COMMODITY FUTURES TRADING COMMISSION

17 CFR Parts 1, 145 and 147

RIN 3038–AC05

Alternative Market Risk and Credit Risk Capital Charges for Futures Commission Merchants and Specified Foreign Currency Forward and Inventory Capital Charges

AGENCY: Commodity Futures Trading Commission.

ACTION: Final rule.

SUMMARY: The Commodity Futures Trading Commission (''Commission'' or ''CFTC'') is amending Commission regulations that impose minimum financial and related reporting requirements upon each person registered as a futures commission merchant (''FCM''). The amended regulations address the capital computations of FCMs that are registered with the Securities and Exchange Commission (''SEC'') as securities brokers or dealers (''FCM/BDs''), and, who, pursuant to SEC's regulations governing consolidated supervised entities (''CSEs''), have received SEC approval to use internal mathematical models to determine the deductions from their capital for market risk and credit risk associated with their proprietary trading assets. Subject to the reporting and other requirements specified in the amended regulations, these FCM/BDs may elect to compute their adjusted net capital using their SEC-approved alternative market risk and credit risk capital deductions in lieu of CFTC requirements. The Commission is also adopting other rule amendments that address confidential treatment for the reports and statements that would be required to be filed under the amended regulations, and also address the confidential treatment of certain other information that all FCMs must file with both the Commission and the SEC.

Finally, the Commission is also adopting amendments that will affect the minimum financial requirements of FCMs and introducing brokers (''IBs'') by reducing the capital deductions for their uncovered inventory or forward contracts in specified foreign currencies. This reduction is consistent with guidance currently provided by the Commission to FCMs and IBs.

DATES: Effective February 2, 2006.

FOR FURTHER INFORMATION CONTACT: Thomas J. Smith, Deputy Director and Chief Accountant, at (202) 418–5430, or Thelma Diaz, Special Counsel, at (202) 418–5137, Division of Clearing and Intermediary Oversight, Commodity Futures Trading Commission, Three Lafayette Centre, 1155 21st Street, NW., Washington, DC 20581. Electronic mail: (*tsmith@cftc.gov*) or (*tdiaz@cftc.gov*).

SUPPLEMENTARY INFORMATION:

I. Background

On October 11, 2005, the Commission published a release in the **Federal Register** to provide public notice of, and request comment on, proposed amendments to its capital rules.[1] The Commission encourages interested persons to read the detailed analysis of the proposing amendments in the October 11 release, and has included citations to pertinent pages of the release as part of the discussion in this final rulemaking release.[2] In response to the proposals issued by the Commission, four commenters sent letters that were generally supportive of the proposed regulations.[3] The commenters included the National Futures Association (''NFA''), a registered futures association; Goldman, Sachs and Co., an FCM/BD; and two industry trade groups, the Futures Industry Association (''FIA'') and the Securities Industry Association (''SIA'').[4] The comments received from each of these organizations are addressed elsewhere in this release, in connection with the specific Commission regulations discussed in these letters.

II. Amendments Allowing Alternative Capital Computation for Proprietary Trading Assets of Qualifying FCM/BDs That Are Part of CSEs

A. Request to Commission for Amendment to Rule 1.17

As noted in the October 11 release, Commission Rule 1.17(a) requires each FCM to maintain a minimum amount of ''adjusted net capital'', which is defined as the FCM's net capital less the deductions, or ''haircuts'', that are specified in Rule 1.17(c)(5) and (8).[5] For purposes of the required haircuts on the FCM's proprietary positions in securities, Rule 1.17(c)(5) incorporates by reference percentage deductions that are set forth in SEC regulations 17 CFR 240.15c3–1(c)(2)(vi) and (vii). Also, Commission Rule 1.17(c)(2)(ii), in a manner similar to the SEC's requirements for BDs under 17 CFR 240.15c3–1(c)(2)(iv), requires unsecured receivables arising from an FCM's transactions in over-the-counter (''OTC'') derivatives to be excluded from the FCM's current assets for purposes of determining the firm's regulatory capital. The deductions required for other proprietary assets of the FCM are set forth in other parts of Commission Rule 1.17(c).

The October 11 release also noted that the Commission and SEC have, to the extent practical, harmonized their respective capital rules in order to avoid creating inconsistent regulatory obligations for firms that are dually-registered FCMs and securities brokers or dealers (''BDs''). This harmonization of capital rules extends to the computation of net capital and adjusted net capital, and to the qualifications that subordinated debt must meet in order to qualify as regulatory capital. Furthermore, if an FCM is also registered as a BD, it may file an SEC Form X–17a–5, ''Financial and Operational Combined Uniform Single Report'' (''FOCUS Report'') to satisfy its requirement to file with the Commission a Form 1–FR–FCM financial report. In particular, Commission Rule 1.10(h) treats Part II and Part IIA of the FOCUS report as acceptable substitutes for the Form 1–FR–FCM, provided that the FOCUS report includes all information required to be furnished on and submitted with Form 1–FR–FCM. Also, for those portions of the Form 1–FR–FCM that the Commission has designated as either publicly available or as exempt from mandatory public

[1] The RIN Number for the release published in the **Federal Register** on October 11, 2005 was identified as 3038–AC19. *See* 70 FR 58985 (October 11, 2005). The correct RIN Number, 3038–AC05, has been used in this release.

[2] The October 11 Release may be accessed electronically on the Commission's Web site, at *http://www.cftc.gov/*.

[3] The original deadline for the receipt for comments was extended from November 10th to November 30, 2005. *See* 70 FR 70749 (November 23, 2005).

[4] The comment letters are available for inspection and copying at the Commission's Washington office in its public reading room, Room 4072, Three Lafayette Centre, 1155 21st Street, NW., Washington, DC 20581. The telephone number for the public reading room is (202) 418–5025. The comment letters also are available on the Commission's public Web site, at *http://www.cftc.gov/foia/comment05/foi05--006_1.htm*.

[5] The rules of the Commission cited in this release may be found at 17 CFR Ch. I (2005). SEC rules cited in this release may be found at 17 CFR Ch. II (2005).

disclosure for purposes of the Freedom of Information Act and the Government in the Sunshine Act, the Commission extends the same treatment to those portions of the FOCUS Report that are equivalent to the Form 1–FR–FCM. The uniform capital computations, and related single-form filing requirements, harmonize the regulatory requirements imposed upon dual registrants while providing the Commission and SEC with the necessary financial information to assess whether firms maintain a minimum level of regulatory capital while engaging in futures and securities businesses.

On June 21, 2004, the SEC adopted final rule amendments to its capital rules to provide an alternative net capital computation for broker-dealers that voluntarily elect to be supervised on a consolidated basis (the ''Alternative Capital Computation'').[6] As amended, SEC Rule 15c3–1(a)(7), (17 CFR 240.15c3–1(a)(7)), provides that the SEC may approve a BD's application, if submitted in accordance with the provisions of a new Appendix E (17 CFR 240.15c3–1e), to use the Alternative Capital Computation when calculating its net capital.[7] To the extent approved by the SEC, the BD using the Alternative Capital Computation would compute a total deduction for market risk for positions in the proprietary accounts of the BD, in accordance with the specific standards set forth in Appendix E.[8] The BD would calculate its regulatory capital using this deduction in lieu of the haircuts that SEC Rules 15c3–1(c)(2)(vi) and (c)(2)(vii) require for the BD's positions in securities. The SEC may also approve alternative market risk deductions for the BD's proprietary positions in forward contracts and commodity futures contracts. Also, Appendix E provides that where the alternative market risk deduction has been used to compute the deduction on the underlying instrument for OTC derivatives of the BD, the BD would compute a deduction for credit risk, using the standards set forth in Appendix E, and it would use this deduction in lieu of the capital charges that SEC Rule 15c3–1(c)(2)(iv) requires for the BD's credit exposures arising from OTC transactions in derivatives.[9]

As the SEC noted when first proposing rules for the Alternate Capital Computation, the required market risk and credit risk deductions are expected to be substantially smaller in amount than the standardized deductions.[10] As the SEC rule amendments were being discussed and proposed, Commission staff identified that continued harmonization of the capital rules of the two agencies would require amendment of Rule 1.17, and communicated this to various market participants potentially affected by the difference between the SEC's proposed rules and CFTC Rule 1.17. After the SEC adopted rule amendments allowing BDs to apply for approval to use the Alternative Capital Computation, several FCM/BDs, along with representatives of the SIA and the FIA, contacted staff of the Commission's Division of Clearing and Intermediary Oversight (the ''Division'') to express their support for Commission rulemaking that would allow dually-registered FCM/BDs to use their SEC-approved alternative market risk and credit risk deductions when computing their adjusted net capital under Rule 1.17.[11] In addition, two dually-registered FCM/BDs that had received SEC approval for the Alternative Capital Computation requested no-action positions from Division staff, without which the Alternative Capital Computation could not be used for purposes of their capital computation and reporting requirements to the Commission. The Division granted such relief on an interim basis, to be superseded by such final rules as the Commission might eventually adopt in connection with the Alternative Capital Computation.[12]

B. Amendments to Rule 1.17 for FCMs Electing To Use SEC-Approved Capital Deductions.

After consideration of the amendments as proposed in the October 11 release, and in view of the comments that the Commission received in response to the proposed amendments, which generally supported their adoption, the Commission is amending Rule 1.17 to provide that an FCM/BD may elect, if the firm satisfies all of the requirements of a new paragraph (c)(6), to compute its adjusted net capital using alternative capital deductions that the SEC has approved by written order under 17 CFR 240.15c3–1(a)(7). The amended regulation permits an FCM, to the extent that the SEC has approved alternative capital deductions for the FCM/BD's unsecured receivables from OTC transactions in derivatives, or for its proprietary positions in securities, forward contracts, or futures contracts, to use these same alternative capital deductions when computing its adjusted net capital under the Commission's regulations. These alternative deductions would be used in lieu of the amounts that otherwise would be required by the following regulations: Rule 1.17(c)(2)(ii) for unsecured receivables from OTC derivatives transactions; Rule 1.17(c)(5)(ii) for proprietary positions in forward contracts; Rule 1.17(c)(5)(v) for proprietary positions in securities; and Rule 1.17(c)(5)(x) for proprietary positions in futures contracts. The amendments do not alter or affect the haircuts that Rule 1.17(c)(5)(v) and Rule 1.32(b) require for securities that are held in segregation under section 4d of the Commodity Exchange Act, because the alternative deductions apply solely to an FCM/BD's proprietary positions.[13]

The terms of the amended Rule 1.17(c)(6) has been adopted as originally proposed by the Commission in the October 11 release. The effective date for the amended regulations is the date of the publication of this release in the **Federal Register**, at which time all FCMs that determine to elect to use the Alternative Capital Computation must comply with the requirements of the amended regulations. If a firm has already elected to use the Alternative Capital Computation under earlier no-action positions issued by the Division

[6] The SEC's new rule was published at 69 FR 34428 (June 21, 2004). The effective date of the rule was August 20, 2004.

[7] A detailed description of the application process was included in the October 11 release. *See* 70 FR at 58989.

[8] The requirements for the computation of the deduction for market risk were summarized in the October 11 Release. *See* 70 FR at 58987–58988.

[9] The requirements for the computation of the deduction for credit risk were summarized in the October 11 Release. *See* 70 FR at 58988–58989.

[10] The SEC's proposed rules for the Alternative Capital Computation were published in the **Federal Register** in 2003. 68 FR 62872 (November 6, 2003).

[11] The Securities Industry Association and the Futures Industry Association are industry trade groups whose members include broker-dealers, futures commission merchants, and representatives of other segments of the securities and futures industries.

[12] Two additional FCMs have received SEC approval to use the Alternative Capital Computation, and have received similar no-action positions from the Division pending the rulemaking process.

[13] FCM/BDs using the Alternative Capital Computation would continue to be required, under Rule 1.17(c)(5)(v), to deduct the securities haircuts specified in SEC Rules 15c3–1(c)(2)(vi) and (vii) from the value of securities that are held in segregated accounts under Section 4d and the Commission's implementing regulations and which were not deposited by customers. Such FCM/BDs would also continue to be required, when computing the amount of funds required to be in segregated accounts, to use the standard SEC securities haircut expressly referenced in Rule 1.32(b), *i.e.*, SEC Rule 15c3–1(c)(2)(vi). Rule 1.32 applies this haircut for purposes of the permissible offset of any net deficit in a customer's account against the current market value of readily marketable securities, less the SEC standard haircut, that are held for the same customer's account.

of Clearing and Intermediary Oversight, it may not continue to use the Alternative Capital Computation unless it maintains compliance with the reporting and other continuing obligations required by the amended regulations, as the earlier no-action positions are withdrawn as of the effective date of the amended regulations.

In formulating the amendments to its rules, the Commission has taken into consideration that the Alternative Capital Computation, unlike the current standardized charges, is determined by an ongoing oversight process that results in individualized capital charges that require considerable firm-specific information.[14] Pursuant to Commission Rule 1.17(a)(3), FCMs must be able to demonstrate to the satisfaction of the Commission their continuous compliance with their minimum financial requirements under the Commodity Exchange Act and implementing regulations of the Commission. The Commission also took into consideration that SEC Rule 15c3–1(a)(7) requires the BD to maintain at all times ''tentative net capital'' [15] of not less than $1 billion and net capital of not less than $500 million, and to provide same day notice if the BD's tentative net capital is less than $5 billion, or some other ''early warning'' amount specified by the SEC.[16] The Alternative Capital Computation is also limited to those firms who: (i) Have in place an internal risk management system that complies with 17 CFR 240.15c3–4 (previously applicable only to OTC derivatives dealers registered with the SEC), which addresses not only their market risk and credit risk, but also liquidity, legal and operational risks at the firm; and (ii) whose ultimate holding company and affiliates have consented to SEC consolidated supervision, *i.e.*, they elect CSE status.[17] For purposes of such consolidated supervision, the BD's ultimate holding company and affiliated entities must consent to direct examination by the SEC, unless the holding company is subject to supervision by the Federal Reserve or foreign banking regulators because it is a U.S. holding company or foreign bank that has elected financial holding company status under the Bank Holding Company Act of 1956.[18] The SEC has added a new Appendix G to Rule 15c3–1 (17 CFR 240.15c3–1g), which establishes the minimum reporting, recordkeeping, and notification requirements for all holding companies of BDs that apply for, or have received approval for the use of, the Alternative Capital Computation.[19]

1. Notice of Election or of Changes to Election

Amended paragraph (c)(6)(ii) of Rule 1.17 specifies that an FCM's election to use the Alternative Capital Computation shall not be effective unless and until it has filed with the Commission a notice, addressed to the Director of the Division of Clearing and Intermediary Oversight, that is to include: (i) A copy of the SEC order approving its alternative market risk and credit risk capital charges; and (ii) a statement that identifies the amount of tentative net capital below which the FCM is required to provide notice to the SEC, and that also includes portions of the information made available to the SEC for purposes of its request for approval to use the Alternative Capital Computation, as follows:

(1) A list of the categories of positions that the firm holds in its proprietary accounts, and, for each such category, a description of the methods that the firm will use to calculate its deductions for market risk and credit risk, and, if calculated separately, its deductions for specific risk;

(2) A description of the VaR models to be used for its market risk and credit risk deductions, and an overview of the integration of the models into the internal risk management control system of the firm;

(3) A description of how the firm will calculate current exposure and maximum potential exposure for its deductions for credit risk;

(4) A description of how the firm will determine internal credit ratings of counterparties and internal credit risk weights of counterparties, if applicable; and

(5) A description of the estimated effect of the alternative market risk and credit risk deductions on the amounts reported by the firm as net capital and adjusted net capital.

Amended Rule 1.17(c)(6)(ii) also requires the FCM to supplement its statement, upon the request of the Commission made at any time, with any other explanatory information for the firm's computation of its alternative market risk and credit risk deductions as the Commission may require at its discretion. The requests for explanatory information under amended Rule 1.17(c)(6)(ii) may be made by the Director of the Division of Clearing and Intermediary Oversight, to whom, as set forth in Commission Rule 140.91(a)(6), the Commission has delegated authority for the functions reserved for the Commission under Rule 1.17.

Amended Rule 1.17(c)(6)(ii) further provides that the FCM must file, as a supplemental notice with the Director of the Division of Clearing and Intermediary Oversight, a notice advising that the SEC has imposed additional or revised conditions after the date of the SEC order filed with the FCM's original notice to the Director of the Division of Clearing and Intermediary Oversight. The FCM must also file as a supplemental notice a copy of any approval by the SEC of amendments that the firm has requested for its application to use the Alternative Capital Computation.

An FCM is also permitted under the amended rule to voluntarily change its election, by filing with the Director of the Division of Clearing and Intermediary Oversight a written notice that specifies a future date as of which its market risk and credit risk capital charges will no longer be determined by the Alternative Capital Computation, but will instead be computed as otherwise required under the Commission's rules.

2. Conditions Under Which FCM May No Longer Elect Alternative Capital Charges

Amended paragraph (c)(6)(iii) of Rule 1.17 specifies that an FCM may no longer elect to use its SEC-approved alternative market risk and credit risk

[14] See 70 FR 58989–90.

[15] The BD's ''tentative net capital'' consists of its net capital before the approved deductions for market risk and credit risk under the SEC's amended rule, and also increased by the balance sheet value (including counterparty net exposure) resulting from transactions in derivative instruments that would otherwise be deducted by virtue of paragraph (c)(2)(iv) of Rule 15c3–1.

[16] Upon written application by a BD, the SEC may lower the threshold for the early warning requirement, either unconditionally or subject to specified terms and conditions. The SEC will consider various factors to determine whether the early warning requirement should be modified. 69 FR at 34461.

[17] In adopting the Alternative Capital Computation, the SEC has also responded to concerns expressed by several U.S. BDs that are required, pursuant to a directive issued by the European Union (''EU'') at the end of 2002 (the ''Financial Groups Directive''), to demonstrate holding company supervision that is equivalent to EU consolidated supervision. See ''Directive 2002/87/EC of the European Parliament and of the Council of 16 December 2002.'' Absent a demonstration of comparable group-wide supervision, the EU may restrict or otherwise place conditions upon the operations of the European-based affiliates of these BDs. The consolidated supervision requirements in the SEC's amended rules provide a regulatory structure that is intended to satisfy the requirements of the Financial Groups Directive.

[18] The CSE rule specifically exempts FCM affiliates of BDs, and other functionally regulated BD affiliates, from the SEC's direct examination.

[19] To minimize duplicative regulation, Appendix G imposes fewer requirements on holding companies that have elected financial holding company status.

deductions, and must instead compute the charges otherwise required under Rules 1.17(c)(5) or 1.17(c)(2), upon the occurrence of any of the following: (i) The SEC revokes its approval of the firm's market risk and credit risk deductions; (ii) the firm fails to come into compliance with its filing requirements under the proposed rule, after having received from the Director of the Division of Clearing and Intermediary Oversight written notification that the firm is not in compliance with its filing requirements, and must cease using the Alternative Capital Computation if it has not come into compliance by a date specified in the notice; or (iii) the Commission by written order finds that permitting the firm to continue to use such alternative market risk and credit risk deductions is no longer appropriate for the protection of customers of the FCM or the financial integrity of the futures or options markets. In addition, since the amended rule permits only dual registrants to use the Alternative Capital Computation, an FCM's election to use the Alternative Capital Computation automatically terminates immediately, without further action by the Commission, if the firm ceases to be dually-registered as a BD.

3. Additional Filing Requirements

In addition to the notice and supplemental notices described above, amended paragraph (c)(6)(iv) also provides that any firm that elects to use the Alternative Capital Computation must file with the Commission copies of all additional monthly, quarterly, and annual reporting items that BDs who are approved to use the Alternative Capital Computation must file with SEC, as discussed above. The FCM must also file with the Commission a copy of the notice that it is required to file with the SEC whenever its tentative net capital falls below the amount required by the SEC, or of the notice filed with the SEC or the firm's designated examining authority in regard to planned withdrawals of excess net capital.

Specifically, the amended rule requires that the following be filed with the Commission, at the same time that originals are filed with the SEC: (i) All information that the firm files on a monthly basis with its designated examining authority or the SEC in satisfaction of SEC Rule 17a–5(a)(5)(i), whether by way of schedules to the firm's FOCUS reports or by other filings; (ii) the quarterly reports required by SEC Rule 17a–5(a)(5)(ii); (iii) the supplemental annual filings as required by SEC Rule 17a–5(k), which consist of a report on management controls that is prepared by a registered public accounting firm and is filed by the firm concurrently with its annual audit report, and also a related statement, filed prior to the commencement of the accountant's review but no later than December 10 of each year, that includes a description of the procedures agreed to by the firm and the accountant and a notice describing changes to the agreed-upon procedures, if any, or stating that there are no changes; and (iv) any notification to the SEC or the firm's designated examining authority of planned withdrawals of excess net capital, and any notification that the firm is required to file with the SEC when its tentative net capital is below an amount specified by the SEC.

4. Conforming Amendments To permit Filing of Part II CSE FOCUS Report

Those BDs that use the Alternative Capital Computation also file a revised Part II to the FOCUS report, designated ''Part II CSE''. This revised FOCUS report includes financial information that BDs previously reported in Part II of the FOCUS Report, and also includes new schedules that provide much of the additional information that BDs who use the Alternative Capital Computation must report on a monthly basis. In order to facilitate the firm's reporting requirements and reduce administrative burden, the Commission has amended Rule 1.10(h) to specify that a dual registrant may file, in lieu of its Form 1–FR–FCM report, a copy of the FOCUS Report, Part II CSE that the firm files with the SEC.[20]

All of the commenters supported the Commission's proposed amendments to Regulations 1.10(h) and 1.17(c)(6), which would have the effect of harmonizing capital calculations under the CFTC's and SEC's regulations. Two commenters, FIA and the SIA, recommended that the Commission should further take into consideration whether reporting and filing requirements under the Commission's ''risk assessment'' regulations, Rules 1.14 and 1.15, might be revised to allow five FCMs to substitute alternative means of compliance, either through making available for inspection certain holding company information provided to the SEC under its CSE regulations, or through information-sharing arrangements between the SEC and CFTC. Both FIA and SIA offered to meet with Commission staff to discuss these or other alternatives for the five firms, in light of the consolidated supervision of their holding companies by the SEC. While not opposed to such discussions, the commenters have raised issues that exceed the scope of the proposed regulations, and may be addressed separately from the amended rules in this release.

III. Treatment of Information Received From FCMs Electing the Alternative Capital Computation, and of Other Information Filed by FCMs and IBs

The release published October 11 also announced proposed amendments to Commission regulations in parts 145 and 147, which respectively implement the provisions of FOIA and the Sunshine Act. Specifically, the Commission proposed to amend Rules 145 and 147 to include all Forms 1–FR and FOCUS reports (except for certain information as discussed below), plus all reports and statements required to be filed pursuant to Rule 1.17(c)(6), as representative examples of information that would be exempt from mandatory public disclosure under exemptions that are available under both FOIA and the Sunshine Act (Exemptions 4 and 8 under FOIA, and the same exemptions under the Sunshine Act).[21] The proposed amendments to Commission Rule 1.10(g), however, specified that the Commission would continue to make available upon public request the following information:

(i) For each FCM or IB, the amount of its adjusted net capital, its minimum capital requirement under Rule 1.17, and its adjusted net capital in excess of its minimum capital requirement;

(ii) The statement of financial condition in the certified annual financial report, and footnote disclosures thereof;[22] and

(iii) The statements related to the segregation of customer funds under section 4d of the Commodity Exchange

[20] Several other Commission rules include references to Parts II and Part IIA of the FOCUS report, in order to facilitate the filing of the FOCUS report in lieu of the Form 1–FR–FCM. The Commission has also amended these rules to add a reference to Part II CSE. In particular, conforming amendments have been made to the following rules: Rule 1.10(d)(4)(ii), which sets forth the requirements for ''authorized signers'' of the FOCUS report; Rule 1.10(f)(1), which sets forth the procedures required to obtain extensions of time for filing the FOCUS report; Rule 1.16(c)(5), which requires the accountant's supplemental report on material inadequacies to be filed as of the same date as the Form 1–FR or FOCUS report; Rules 1.18(a) and (b)(2), which permit FOCUS filings to satisfy certain recordkeeping requirements of the FCM; and Rule 1.52(a), which permits the designated self-regulatory organization of a dual registrant to accept a FOCUS report in lieu of a Form 1–FR–FCM.

[21] A summary of FOIA and the Sunshine Act, including exemptions 4 and 8, and their application to the Form 1–FR and FOCUS reports, was included in the October 11 release. *See* 70 FR 58991—58992.

[22] A BD's certified annual statement of financial condition is also publicly available under SEC Rule 17a–5(e)(3).

Act and to customer funds that are held as secured amounts under Rule 30.7.[23]

FIA strongly endorsed the Commission's proposal to amend Rules 1.10(g), 145.5(d) and (h), and 147.3(b) to provide that certain financial information filed with the Commission is exempt from disclosure pursuant to FOIA Exemption 8. The Commission received no comments opposing adoption of these proposed amendments. After considering the proposed amendments and the responses by commenters, the Commission has decided to amend Rules 1.10(g), 145.5(d) and (h), and 147.3(b) as proposed.

IV. Amendments To Reduce Capital Charges for Foreign Currency Forwards and Inventory in Specified Currencies

The Commission has also amended Commission Rule 1.17(c)(5)(ii), pursuant to which an FCM or IB, in computing its adjusted net capital, must deduct from its net capital specified percentages of the market value of its inventory, fixed price commitments and forward contracts. In general, the required deduction from market value for a forward contract that is not ''covered'', as defined in Rule 1.17(j), is twenty percent. The Commission has amended the rule by adding a provision that would specify a capital charge of six percent for uncovered inventory and forward contracts in euros, British pounds, Canadian dollars, Japanese yen, or Swiss francs. Uncovered forward contracts and cash deposits in any other non-U.S. currency would remain subject to the capital charge of twenty percent currently set forth in the rule. As noted by the Commission when it proposed amending Rule 1.17 to reduce the charge for specified currencies to 6 percent, the lower charge is consistent with the reduced currency risk of these foreign currencies, given their stability relative to the U.S. dollar. As discussed in the October 11 release, the reduced charge is also consistent with similar capital charges that BDs are required to deduct from their net capital under SEC regulations.[24] Furthermore, the amendment provides greater clarity and transparency to the Commission's capital rule, as currently the lower capital charge for the specified major non-U.S. currencies is set forth only in the Commission's Form 1–FR Instructions Manual.[25]

FIA and the NFA generally supported this amendment, and no commenters expressed any objections to the amendment. In its comment letter, NFA advocated that the Commission undertake additional revision of Commission Regulation 1.17, to address the Commission's required deductions from capital in relation to the activities of retail foreign exchange (FOREX) dealers that are registered as FCMs. As noted in the NFA's letter, Division staff is already in the process of reviewing several of the issues listed in the letter, as part of separate guidance and/or future rulemaking related to FOREX.

V. Related Matters

A. Administrative Procedure Act

The Administrative Procedure Act (''APA'') provides that the required publication of a substantive rule shall be made not less than 30 days before its effective date, unless the agency is permitted to implement an earlier effective date under one of the exceptions recognized by the APA.[26] The exceptions set forth in the APA are as follows: (1) A substantive rule which grants or recognizes an exemption or relieves a restriction; (2) interpretative rules and statements of policy; or (3) as otherwise provided by the agency for good cause found and published with the rule.[27]

The amendments being made to Rule 1.17 ''grant or recognize an exemption or relieve a restriction'' that harmonizes unnecessarily conflicting capital deductions that would otherwise be required for FCMs that have received SEC approval to use the Alternative Capital Computation. The Commission is also adopting other amendments that permit FCMs to file their Part II CSE FOCUS reports in lieu of their required Form 1–FR, which also contributes to the exemption or relief made available by amended Rule 1.17(c)(6).[28] Accordingly, the Commission has determined to make these amendments effective immediately upon publication in the **Federal Register**.

Furthermore, the Commission has previously found ''good cause'' for making FOIA and Sunshine Act amendments effective immediately with the adoption of new financial filing requirements for FCMs, in particular where the new filings are required prior to the expiration of 30 days from the publication in the rule.[29] In this case, the no-action relief granted to firms prior to the adoption of the amendments of Rule 1.17(c)(6) will be superceded immediately upon the effective date of the amended rules in the attached release, and the firms will be required to comply with the reporting requirements mandated by the amended rules. In addition, other firms may receive SEC approval to use alternative capital charges prior to the expiration of 30 days from the publication of this rule, and would therefore seek to file with the Commission such notices and statements as are required by the amended rule. Accordingly, the Commission has determined to make the amendments to Rules 145 and 147 adopted in this final rulemaking effective immediately upon publication in the **Federal Register**.

B. Regulatory Flexibility Act

The Regulatory Flexibility Act (''RFA''), 5 U.S.C. 601 *et. seq.,* requires that agencies, when amending their rules, consider the impact of those amendments on small businesses. The Commission invited the public to comment on the Chairman's certification that these rules would not have a significant economic impact on a substantial number of small entities.[30] The Commission received no comments on the certification.

C. Paperwork Reduction Act

This rulemaking includes information collection requirements. As required by the Paperwork Reduction Act of 1995 (''PRA''),[31] the Commission submitted a copy of the proposed rule amendments to the Office of Management and Budget (''OMB'') for its review. No comments were received in response to the Commission's invitation in the proposed rules to comment on any potential paperwork burden associated with regulation.[32]

---

[23] Rule 1.10(g) currently provides, and will continue to provide, that all information on Forms 1–FR and FOCUS reports that is nonpublic will, however, be available for official use by any official or employee of the United States or any State, by any self-regulatory organization of which the person filing such report is a member, by the National Futures Association in the case of an applicant, and by any other person to whom the Commission believes disclosure of such information is in the public interest. Rule 1.10(g) also specifies the rule does not limit the authority of any self-regulatory organization to request or receive any information relative to its members' financial condition.

[24] *See* 70 FR 58993.

[25] An electronic copy of the ''Instructions for Form 1–FR–FCM'' is available to the public on the Commission's Web site, at *http://www.cftc.gov/files/tm/tminstructionsmanualfinalseptember2004.pdf.*

[26] 5 U.S.C. 553(b) and (d).

[27] 5 U.S.C. 553 (d).

[28] As noted earlier, the amendments related to filing the Part II CSE version of the FOCUS report affect Rules 1.10, 1.18, and 1.52.

[29] The Commission's prior determination that there was ''good cause'' for making amendments to parts 145 and 147 effective immediately appears in 44 FR 13435 (March 27, 1979) (Adoption of Changes to Form 1–FR and Freedom of Information and Sunshine Act Rules).

[30] 70 FR at 58994.

[31] 44 U.S.C. 3507(d).

[32] 70 FR at 58994.

D. Cost-Benefit Analysis

Section 15(a) of the Act, as amended by section 119 of the CFMA, requires the Commission to consider the costs and benefits of its action before issuing a new regulation under the Act. By its terms, section 15(a) as amended does not require the Commission to quantify the costs and benefits of a new regulation or to determine whether the benefits of the regulation outweigh its costs. Rather, section 15(a) simply requires the Commission to ''consider the costs and benefits'' of its action.

Section 15(a) of the Act further specifies that costs and benefits shall be evaluated in light of five broad areas of market and public concern: Protection of market participants and the public; efficiency, competitiveness, and financial integrity of futures markets; price discovery; sound risk management practices; and other public interest considerations. Accordingly, the Commission could in its discretion give greater weight to any one of the five enumerated areas and could in its discretion determine that, notwithstanding its costs, a particular rule was necessary or appropriate to protect the public interest or to effectuate any of the provisions or to accomplish any of the purposes of the Act.

The amended Rule 1.17(c)(6) allows FCM/BDs that meet the requirements of the rule to compute their adjusted net capital using the same alternative capital deductions that have been approved by the SEC. The amended Rule 1.17(c)(5)(ii) reduces a capital charge to which FCMs and IBs are subject under the Commission's current regulations. The Commission is considering the costs and benefits of these amended rules in light of the specific provisions of section 15(a) of the Act, as follows:

1. *Protection of market participants and the public.* The amendments to Rule 1.17(c)(6) provides the benefit of increasing the accuracy of the reflection of risks in the net capital charges for FCM/BDs approved for using the alternative net capital charges based on internal risk measurement tools, while bettering the Commission's ability to perform appropriate financial and risk oversight. Furthermore, the Commission considers that no FCM/BD will elect to use the Alternative Capital Computation unless the costs of compliance would be outweighed by the benefits to such FCM/BD from using the alternative net capital charges.

2. *Efficiency and competition.* The Commission anticipates that the amendments to Rule 1.17(c)(6) will benefit efficiency by eliminating a difference in the computation of net capital charges between the SEC and the CFTC for dually-registered FCM/BDs that have been approved by the SEC to use such charges. The amendments to Rule 1.17(c)(5)(ii) reduce the capital charges applicable to FCMs and IBs, which may therefore result in the more efficient utilization of their capital.

3. *Financial integrity of futures markets and price discovery.* The notification and reporting requirements in amended Rule 1.17(c)(6) contribute to the benefit of ensuring that eligible FCMs can meet their financial obligations to customers and other market participants. Customers and other market participants would also benefit from the provisions in amended Rule 1.10(g), which continues to make publicly available certain information in Form 1–R and FOCUS reports related to capital requirements and requirements for customer funds to be held in segregated or separate accounts. The proposed amendments should have no effect, from the standpoint of imposing costs or creating benefits, on the price discovery function of such markets.

4. *Sound risk management practices.* The alternative capital computation permitted under amended Rule 1.17(c)(6) is limited to FCMs who have in place an internal risk management system that expressly addresses market risk, credit risk, liquidity risk, legal risk and operational risks at the firm. The amended rule also requires that the Commission receive copies of written reviews, which are to be prepared annually by registered public accountants, of the firm's internal risk management control system. The amended rule may therefore contribute to the sound risk management practices of futures intermediaries.

5. *Other public interest considerations.* The Commission also believes that the amendments to Rule 1.17(c)(6) are beneficial in that they minimize what would otherwise be a conflict between Commission and SEC rules, which conflict would otherwise make the SEC's opportunity for qualifying BDs to use alternative net capital charges unavailable to dually registered FCM/BDs, despite the commonality of interest and purpose for the CFTC and SEC minimum net capital rules. The amendments to Rule 1.17(c)(5)(ii), which incorporates agency guidance not presently included in the Commission's regulations, enhances the transparency of the Commission's rulemaking for FCMs and IBs.

The Commission invited, but did not receive, public comment on its application of the cost-benefit provision. After considering these factors, the Commission has determined to issue this final rule.

List of Subjects

17 CFR Part 1

Brokers, Commodity futures, Reporting and recordkeeping requirements.

17 CFR Part 145

Freedom of information.

17 CFR Part 147

Sunshine Act.

■ Accordingly, 17 CFR Chapter I is amended as follows:

PART 1—GENERAL REGULATIONS UNDER THE COMMODITY EXCHANGE ACT

■ 1. The authority citation for part 1 continues to read as follows:

Authority: 7 U.S.C. 1a, 2, 5, 6, 6a, 6b, 6c, 6d, 6e, 6f, 6g, 6h, 6i, 6j, 6k, 6l, 6m, 6n, 6o, 6p, 7, 7a, 7b, 8, 9, 12, 12a, 12c, 13a, 13a–1, 16, 16a, 19, 21, 23, and 24, as amended by the Commodity Futures Modernization Act of 2000, Appendix E of Pub. L. 106–554, 114 Stat. 2763 (2000).

■ 2. Section 1.10 is amended by revising paragraphs (d)(4)(ii), (f)(1) introductory text, (g)(1), (g)(2), (g)(4), and (h) to read as follows:

§ 1.10 Financial reports of futures commission merchants and introducing brokers.

* * * * *

(d) * * *

(4) * * *

(ii) If the registrant or applicant is registered with the Securities and Exchange Commission as a securities broker or dealer, the representative authorized under § 240.17a–5 of this title to file for the securities broker or dealer its Financial and Operational Combined Uniform Single Report under the Securities Exchange Act of 1934, Part II, Part IIA, or Part II CSE. In the case of a Form 1–FR filed via electronic transmission in accordance with procedures established by the Commission, such transmission must be accompanied by the Commission-assigned Personal Identification Number of the authorized signer and such Personal Identification Number will constitute and become a substitute for the manual signature of the authorized signer for the purpose of making the oath or affirmation referred to in this paragraph.

* * * * *

(f) *Extension of time for filing uncertified reports.* (1) In the event a registrant finds that it cannot file its

Form 1–FR, or, in accordance with paragraph (h) of this section, its Financial and Operational Combined Uniform Single Report under the Securities Exchange Act of 1934, Part II, Part IIA, or Part II CSE (FOCUS report), for any period within the time specified in paragraphs (b)(1)(i) or (b)(2)(i) of this section without substantial undue hardship, it may request approval for an extension of time, as follows:

* * * * *

(g) *Public availability of reports.* (1) Forms 1–FR filed pursuant to this section, and FOCUS reports filed in lieu of Forms 1–FR pursuant to paragraph (h) of this section, will be treated as exempt from mandatory public disclosure for purposes of the Freedom of Information Act and the Government in the Sunshine Act and parts 145 and 147 of this chapter, except for the information described in paragraph (g)(2) of this section.

(2) The following information in Forms 1–FR, and the same or equivalent information in FOCUS reports filed in lieu of Forms 1–FR, will be publicly available:

(i) The amount of the applicant's or registrant's adjusted net capital; the amount of its minimum net capital requirement under § 1.17 of this chapter; and the amount of its adjusted net capital in excess of its minimum net capital requirement; and

(ii) The following statements and footnote disclosures thereof: the Statement of Financial Condition in the certified annual financial reports of futures commission merchants and introducing brokers; the Statements (to be filed by a futures commission merchant only) of Segregation Requirements and Funds in Segregation for customers trading on U.S. commodity exchanges and for customers' dealer options accounts, and the Statement (to be filed by a futures commission merchant only) of Secured Amounts and Funds held in Separate Accounts for foreign futures and foreign options customers in accordance with § 30.7 of this chapter.

* * * * *

(4) All information that is exempt from mandatory public disclosure under paragraph (g)(1) of this section will, however, be available for official use by any official or employee of the United States or any State, by any self-regulatory organization of which the person filing such report is a member, by the National Futures Association in the case of an applicant, and by any other person to whom the Commission believes disclosure of such information is in the public interest. Nothing in this paragraph (g) will limit the authority of any self-regulatory organization to request or receive any information relative to its members' financial condition.

* * * * *

(h) *Filing option available to a futures commission merchant or an introducing broker that is also a securities broker or dealer.* Any applicant or registrant which is registered with the Securities and Exchange Commission as a securities broker or dealer may comply with the requirements of this section by filing (in accordance with paragraphs (a), (b), (c), and (j) of this section) a copy of its Financial and Operational Combined Uniform Single Report under the Securities Exchange Act of 1934, Part II, Part IIA, or Part II CSE (FOCUS report), in lieu of Form 1–FR: *Provided, however*, That all information which is required to be furnished on and submitted with Form 1–FR is provided with such FOCUS report.

* * * * *

■ 3. Section 1.16 is amended by revising paragraph (c)(5) to read as follows:

§ 1.16 Qualifications and reports of accountants.

* * * * *

(c) * * *

(5) *Accountant's report on material inadequacies.* A registrant must file concurrently with the annual audit report a supplemental report by the accountant describing any material inadequacies found to exist or found to have existed since the date of the previous audit. An applicant must file concurrently with the audit report a supplemental report by the accountant describing any material inadequacies found to exist as of the date of the Form 1–FR being filed: *Provided, however*, That if such applicant is registered with the Securities and Exchange Commission as a securities broker or dealer, and it files (in accordance with § 1.10(h)) a copy of its Financial and Operational Combined Uniform Single Report under the Securities Exchange Act of 1934, Part II, Part IIA, or Part II CSE, in lieu of Form 1–FR, the accountant's supplemental report must be made as of the date of such report. The supplemental report must indicate any corrective action taken or proposed by the applicant or registrant in regard thereto. If the audit did not disclose any material inadequacies, the supplemental report must so state.

* * * * *

■ 4. Section 1.17 is amended by revising paragraphs (c)(5)(ii) and adding (c)(6) to read as follows:

§ 1.17 Minimum financial requirements for futures commission merchants and introducing brokers.

* * * * *

(c) * * *

(5) * * *

(ii) In the case of all inventory, fixed price commitments and forward contracts, the applicable percentage of the net position specified below:

(A) Inventory which is currently registered as deliverable on a contract market and covered by an open futures contract or by a commodity option on a physical.—No charge.

(B) Inventory which is covered by an open futures contract or commodity option.—5 percent of the market value.

(C) Inventory which is not covered.—20 percent of the market value.

(D) Inventory and forward contracts in those foreign currencies that are purchased or sold for future delivery on or subject to the rules of a contract market, and which are covered by an open futures contract.—No charge

(E) Inventory and forward contracts in euros, British pounds, Canadian dollars, Japanese yen, or Swiss francs, and which are not covered by an open futures contract or commodity option.—6 percent of the market value.

(F) Fixed price commitments (open purchases and sales) and forward contracts which are covered by an open futures contract or commodity option.—10 percent of the market value.

(G) Fixed price commitments (open purchases and sales) and forward contracts which are not covered by an open futures contract or commodity option.—20 percent of the market value.

* * * * *

(6) Election of alternative capital deductions that have received approval of Securities and Exchange Commission pursuant to § 240.15c3–1(a)(7) of this title.

(i) Any futures commission merchant that is also registered with the Securities and Exchange Commission as a securities broker or dealer, and who also satisfies the other requirements of this paragraph (c)(6), may elect to compute its adjusted net capital using the alternative capital deductions that, under § 240.15c3–1(a)(7) of this title, the Securities and Exchange Commission has approved by written order. To the extent that a futures commission merchant is permitted by the Securities and Exchange Commission to use alternative capital deductions for its unsecured receivables from over-the-counter transactions in derivatives, or for its proprietary positions in securities, forward contracts, or futures contracts, the futures commission merchant may use these same

alternative capital deductions when computing its adjusted net capital, in lieu of the deductions that would otherwise be required by paragraph (c)(2)(ii) of this section for its unsecured receivables from over-the-counter derivatives transactions; by paragraph (c)(5)(ii) of this section for its proprietary positions in forward contracts; by paragraph (c)(5)(v) of this section for its proprietary positions in securities; and by paragraph (c)(5)(x) of this section for its proprietary positions in futures contracts.

(ii) *Notifications of election or of changes to election.* (A) No election to use the alternative market risk and credit risk deductions referenced in paragraph (c)(6)(i) of this section shall be effective unless and until the futures commission merchant has filed with the Commission, addressed to the Director of the Division of Clearing and Intermediary Oversight, a notice that is to include a copy of the approval order of the Securities and Exchange Commission referenced in paragraph (c)(6)(i) of this section, and to include also a statement that identifies the amount of tentative net capital below which the futures commission merchant is required to provide notice to the Securities and Exchange Commission, and which also provides the following information: a list of the categories of positions that the futures commission merchant holds in its proprietary accounts, and, for each such category, a description of the methods that the futures commission merchant will use to calculate its deductions for market risk and credit risk, and also, if calculated separately, deductions for specific risk; a description of the value at risk (VaR) models to be used for its market risk and credit risk deductions, and an overview of the integration of the models into the internal risk management control system of the futures commission merchant; a description of how the futures commission merchant will calculate current exposure and maximum potential exposure for its deductions for credit risk; a description of how the futures commission merchant will determine internal credit ratings of counterparties and internal credit risk weights of counterparties, if applicable; and a description of the estimated effect of the alternative market risk and credit risk deductions on the amounts reported by the futures commission merchant as net capital and adjusted net capital.

(B) A futures commission merchant must also, upon the request of the Commission at any time, supplement the statement described in paragraph (c)(6)(ii)(A) of this section, by providing any other explanatory information regarding the computation of its alternative market risk and credit risk deductions as the Commission may require at its discretion.

(C) A futures commission merchant must also file the following supplemental notices with the Director of the Division and Clearing and Intermediary Oversight:

(*1*) A notice advising that the Securities and Exchange Commission has imposed additional or revised conditions for the approval evidenced by the order referenced in paragraph (c)(6)(i) of this section, and which describes the new or revised conditions in full, and

(*2*) A notice which attaches a copy of any approval by the Securities and Exchange Commission of amendments that a futures commission merchant has requested for its application, filed under 17 CFR 240.15c3–1e, to use alternative market risk and credit risk deductions approved by the Securities and Exchange Commission.

(D) A futures commission merchant may voluntarily change its election to use the alternative market risk and credit risk deductions referenced in paragraph (c)(6)(i) of this section, by filing with the Director of the Division of Clearing and Intermediary Oversight a written notice specifying a future date as of which it will no longer use the alternative market risk and credit risk deductions, and will instead compute such deductions in accordance with the requirements otherwise applicable under paragraph (c)(2)(ii) of this section for unsecured receivables from over-the-counter derivatives transactions; by paragraph (c)(5)(ii) of this section for proprietary positions in forward contracts; by paragraph (c)(5)(v) of this section for proprietary positions in securities; and by paragraph (c)(5)(x) of this section for proprietary positions in futures contracts.

(iii) *Conditions under which election terminated.* A futures commission merchant may no longer elect to use the alternative market risk and credit risk deductions referenced in paragraph (c)(6)(i) of this section, and shall instead compute the deductions otherwise required under paragraph (c)(2)(ii) of this section for unsecured receivables from over-the-counter derivatives transactions; by paragraph (c)(5)(ii) of this section for proprietary positions in forward contracts; by paragraph (c)(5)(v) of this section for proprietary positions in securities; and by paragraph (c)(5)(x) of this section for proprietary positions in futures contracts, upon the occurrence of any of the following:

(A) The Securities and Exchange Commission revokes its approval of the market risk and credit risk deductions for such futures commission merchant;

(B) A futures commission merchant fails to come into compliance with its filing requirements under this paragraph (c)(6), after having received from the Director of the Division of Clearing and Intermediary Oversight written notification that the firm is not in compliance with its filing requirements, and must cease using alternative capital deductions permitted under this paragraph (c)(6) if it has not come into compliance by a date specified in the notice; or

(C) The Commission by written order finds that permitting the futures commission merchant to continue to use such alternative market risk and credit risk deductions is no longer necessary or appropriate for the protection of customers of the futures commission merchant or of the integrity of the futures or options markets.

(iv) *Additional filing requirements.* Any futures commission merchant that elects to use the alternative market risk and credit risk deductions referenced in paragraph (c)(6)(i) of this section must file with the Commission, in addition to the filings required by paragraph (c)(6)(ii) of this section, copies of any and all of the following documents, at such time as the originals are filed with the Securities and Exchange Commission:

(A) Information that the futures commission merchant files on a monthly basis with its designated examining authority or the Securities and Exchange Commission, whether by way of schedules to its FOCUS reports or by other filings, in satisfaction of 17 CFR 240.17a–5(a)(5)(i);

(B) The quarterly reports required by 17 CFR 240.17a–5(a)(5)(ii);

(C) The supplemental annual filings as required by 17 CFR 240.17a–5(k);

(D) Any notification to the Securities and Exchange Commission or the futures commission merchant's designated examining authority of planned withdrawals of excess net capital; and

(E) Any notification that the futures commission merchant is required to file with the Securities and Exchange Commission when its tentative net capital is below an amount specified by the Securities and Exchange Commission.

* * * * *

■ 5. Section 1.18 is amended by revising paragraphs (a) and (b)(2) to read as follows:

§ 1.18 Records for and relating to financial reporting and monthly computation by futures commission merchants and introducing brokers.

(a) No person shall be registered as a futures commission merchant or as an introducing broker under the Act unless, commencing on the date his application for such registration is filed, he prepares and keeps current ledgers or other similar records which show or summarize, with appropriate references to supporting documents, each transaction affecting his asset, liability, income, expense and capital accounts, and in which (except as otherwise permitted in writing by the Commission) all his asset, liability and capital accounts are classified into either the account classification subdivisions specified on Form 1–FR–FCM or Form 1–FR–IB, respectively, or, if such person is registered with the Securities and Exchange Commission as a securities broker or dealer and he files (in accordance with § 1.10(h)) a copy of his Financial and Operational Combined Uniform Single Report under the Securities Exchange Act of 1934, Part II, Part IIA, or Part II CSE (FOCUS report) in lieu of Form 1–FR–FCM or Form 1–FR–IB, the account classification subdivisions specified on such FOCUS report, or categories that are in accord with generally accepted accounting principles. Each person so registered shall prepare and keep current such records.

(b) * * *

(2) An applicant or registrant that has filed a monthly Form 1–FR or Statement of Financial and Operational Combined Uniform Single Report under the Securities Exchange Act of 1934, Part II, Part IIA, or Part II CSE (FOCUS report) in accordance with the requirements of § 1.10(b) will be deemed to have satisfied the requirements of paragraph (b)(1) of this section for such month.

* * * * *

■ 6. Section 1.52 is amended by revising paragraph (a) to read as follows:

§ 1.52 Self-regulatory organization adoption and surveillance of minimum financial requirements.

(a) Each self-regulatory organization must adopt, and submit for Commission approval, rules prescribing minimum financial and related reporting requirements for all its members who are registered futures commission merchants. Each self-regulatory organization other than a contract market must adopt, and submit for Commission approval, rules prescribing minimum financial and related reporting requirements for all its members who are registered introducing brokers. Each contract market which elects to have a category of membership for introducing brokers must adopt, and submit for Commission approval, rules prescribing minimum financial and related reporting requirements for all its members who are registered introducing brokers. Each self-regulatory organization shall submit for Commission approval any modification or other amendments to such rules. Such requirements must be the same as, or more stringent than, those contained in §§ 1.10 and 1.17 and the definition of adjusted net capital must be the same as that prescribed in § 1.17(c): *Provided, however*, A designated self-regulatory organization may permit its member registrants which are registered with the Securities and Exchange Commission as securities brokers or dealers to file (in accordance with § 1.10(h)) a copy of their Financial and Operational Combined Uniform Single Report under the Securities Exchange Act of 1934, Part II, Part IIA, or Part II CSE, in lieu of Form 1–FR: And, *provided further*, A designated self-regulatory organization may permit its member introducing brokers to file a Form 1–FR–IB in lieu of a Form 1–FR–FCM.

* * * * *

PART 145—COMMISSION RECORDS AND INFORMATION

■ 7. The authority citation for part 145 continues to read as follows:

Authority: Pub. L. 99–570, 100 Stat. 3207; Pub. L. 89–554, 80 Stat. 383; Pub. L. 90–23, 81 Stat. 54; Pub. L. 98–502, 88 Stat. 1561–1564 (5 U.S.C. 552); Sec. 101(a), Pub. L. 93–463, 88 Stat. 1389 (5 U.S.C. 4a(j)); unless otherwise noted.

■ 8. Section 145.5 is amended by revising paragraphs (d)(1) and (h) to read as follows:

§ 145.5 Disclosure of nonpublic records.

* * * * *

(d) Trade secrets and commercial or financial information obtained from a person and privileged or confidential, including, but not limited to:

(1)(i) Reports of stocks of grain, such as Forms 38, 38C, 38M and 38T required to be filed pursuant to 17 CFR 1.44;

(ii) Statements of reporting traders on Form 40 required to be filed pursuant to 17 CFR 18.04;

(iii) Statements concerning special calls on positions required to be filed pursuant to 17 CFR part 21;

(iv) Statements concerning identification of special accounts on Form 102 required to be filed pursuant to 17 CFR 17.01;

(v) Reports required to be filed pursuant to parts 15 through 21 of this chapter;

(vi) Reports concerning option positions of large traders required to be filed pursuant to part 16 of this chapter;

(vii) Form 188; and

(viii) The following reports and statements that are also set forth in paragraph (h) of this section, except as specified in 17 CFR 1.10(g)(2) or 17 CFR 31.13(m): Forms 1–FR required to be filed pursuant to 17 CFR 1.10; FOCUS reports that are filed in lieu of Forms 1–FR pursuant to 17 CFR 1.10(h); Forms 2–FR required to be filed pursuant to 17 CFR 31.13; the accountant's report on material inadequacies filed in accordance with 17 CFR 1.16(c)(5); and all reports and statements required to be filed pursuant to 17 CFR 1.17(c)(6);

* * * * *

(h) Contained in or related to examinations, operating, or condition reports prepared by, on behalf of, or for the use of the Commission or any other agency responsible for the regulation or supervision of financial institutions, including, but not limited to the following reports and statements that are also set forth in paragraph (d)(1)(viii) of this section, except as specified in 17 CFR 1.10(g)(2) or 17 CFR 31.13(m): Forms 1–FR required to be filed pursuant to 17 CFR 1.10; FOCUS reports that are filed in lieu of Forms 1–FR pursuant to 17 CFR 1.10(h); Forms 2–FR required to be filed pursuant to 17 CFR 31.13; the accountant's report on material inadequacies filed in accordance with 17 CFR 1.16(c)(5); and all reports and statements required to be filed pursuant to 17 CFR 1.17(c)(6); and

* * * * *

PART 147—OPEN COMMISSION MEETINGS

■ 9. The authority citation for part 147 continues to read as follows:

Authority: Sec. 3(a), Pub. L. 94–409, 90 Stat. 1241 (5 U.S.C. 552b); sec. 101(a)(11), Pub. L. 93–463, 88 Stat. 1391 (7 U.S.C. 4a(j) (Supp. V, 1975)), unless otherwise noted.

■ 10. Section 147.3 is amended by revising paragraphs (b)(4)(i) and (b)(8) to read as follows:

§ 147.3 General requirement of open meetings; grounds upon which meetings may be closed.

* * * * *

(b) * * *

(4)(i) Disclose trade secrets and commercial or financial information obtained from a person and privileged or confidential including, but not limited to:

(A) Reports of stocks of grain, such as Forms 38, 38C, 38M and 38T, required to be filed pursuant to 17 CFR 1.44;

(B) Statements of reporting traders on Form 40 required to be filed pursuant to 17 CFR 18.04;

(C) Statements concerning special calls on positions required to be filed pursuant to 17 CFR part 21;

(D) Statements concerning identification of special accounts on Form 102 required to be filed pursuant to 17 CFR 17.01;

(E) Reports required to be filed pursuant to parts 15 through 21 of this chapter;

(F) Reports concerning option positions of large traders required to be filed pursuant to part 16 of this chapter;

(G) Form 188; and

(H) The following reports and statements that are also set forth in paragraph (b)(8) of this section, except as specified in 17 CFR 1.10(g)(2) or 17 CFR 31.13(m): Forms 1–FR required to be filed pursuant to 17 CFR 1.10; FOCUS reports that are filed in lieu of Forms 1–FR pursuant to 17 CFR 1.10(h); Forms 2–FR required to be filed pursuant to 17 CFR 31.13; the accountant's report on material inadequacies filed in accordance with 17 CFR 1.16(c)(5); and all reports and statements required to be filed pursuant to 17 CFR 1.17(c)(6);

* * * * *

(8) Disclose information contained in or related to examination, operating, or condition reports prepared by, on behalf of, or for the use of the Commission or any other agency responsible for the regulation or supervision of financial institutions, including, but not limited to the following reports and statements that are also set forth in paragraph (b)(4)(i)(H) of this section, except as specified in 17 CFR 1.10(g)(2) or 17 CFR 31.13(m): Forms 1–FR required to be filed pursuant to 17 CFR 1.10; FOCUS reports that are filed in lieu of Forms 1–FR pursuant to 17 CFR 1.10(h); Forms 2–FR required to be filed pursuant to 17 CFR 31.13; the accountant's report on material inadequacies filed in accordance with 17 CFR 1.16(c)(5); and all reports and statements required to be filed pursuant to 17 CFR 1.17(c)(6);

* * * * *

Issued in Washington, DC, on January 30, 2006, by the Commission.

Jean A. Webb,

Secretary of the Commission.

[FR Doc. 06–982 Filed 2–1–06; 8:45 am]

BILLING CODE 6351–01–P

SECURITIES AND EXCHANGE COMMISSION

17 CFR Part 232

[Release Nos. 33–8656; 34–53186; 35–28081; 39–2441; IC–27219]

RIN 3235–AG96

Adoption of Updated EDGAR Filer Manual

AGENCY: Securities and Exchange Commission.

ACTION: Final rule.

SUMMARY: The Securities and Exchange Commission (the Commission) is adopting revisions to the Electronic Data Gathering, Analysis, and Retrieval System (EDGAR) Filer Manual to reflect updates to the EDGAR system. The revisions are being made primarily to support the amended rules and forms adopted by the Commission requiring that certain open-end management investment companies and insurance company separate accounts identify in their EDGAR submissions information relating to their investment company type, series and classes (or contracts, in the case of separate accounts), and ticker symbols. Revisions are also being made to support the final rule requiring that Form 25–NSE be filed electronically. In addition, revisions are being made to revoke submission types based on the Public Utility Holding Company Act of 1935 which was repealed in the enactment of the Energy Policy Act of 2005. Finally, revisions are being made to complete the removal of the submission types rescinded on December 1, 2005 as a result of the adoption of securities offering reform initiatives.

The revisions to the Filer Manual reflect changes within Volumes I and II, entitled EDGAR Filer Manual, Volume I: ''General Information,'' Version 2 (February 2006) and EDGAR Filer Manual, Volume II: ''EDGAR Filing,'' Version 3 (February 2006) respectively. The updated manual will be incorporated by reference into the Code of Federal Regulations.

EFFECTIVE DATE: February 6, 2006. The incorporation by reference of the EDGAR Filer Manual is approved by the Director of the Federal Register as of February 6, 2006.

FOR FURTHER INFORMATION CONTACT: In the Office of Information Technology, Rick Heroux, at (202) 551–8800; for questions concerning the rescinding of Public Utility Holding Company Act of 1935 submission types, in the Division of Investment Management, Catherine A. Fisher, Assistant Director, Office of Public Utility Regulation at (202) 551–6944; for questions concerning Securities Offering Reform, in the Division of Corporation Finance, Herbert Scholl, Office Chief, EDGAR and Information Analysis at (202) 551–3615; for questions concerning the Form 25–NSE filings, in the Division of Market Regulation, Sharon Lawson, Senior Special Counsel, at (202) 551–5605; for questions concerning the inclusion of series and class (contract) data in filings for open-end management investment companies and insurance company separate accounts, in the Division of Investment Management, Ruth Armfield Sanders, Senior Special Counsel, at (202) 551–6989; and, in the Office of Filings and Information Services, Shirley Slocum, at (202) 551–8900.

SUPPLEMENTARY INFORMATION: Today we are adopting an updated EDGAR Filer Manual (Filer Manual). The Filer Manual describes the technical formatting requirements for the preparation and submission of electronic filings through the EDGAR system.[1] It also describes the requirements for filing using EDGARLink[2] and the Online Forms/XML Web site.

The Filer Manual contains all the technical specifications for filers to submit filings using the EDGAR system. Filers must comply with the applicable provisions of the Filer Manual in order to assure the timely acceptance and processing of filings made in electronic format.[3] Filers should consult the Filer Manual in conjunction with our rules governing mandated electronic filing when preparing documents for electronic submission.[4]

[1] We originally adopted the Filer Manual on April 1, 1993, with an effective date of April 26, 1993. Release No. 33–6986 (April 1, 1993) [58 FR 18638]. We implemented the most recent update to the Filer Manual on November 7, 2005. *See* Release No. 33–8633 (November 1, 2005) [70 FR 67350].

[2] This is the filer assistance software we provide filers filing on the EDGAR system.

[3] *See* Rule 301 of Regulation S–T (17 CFR 232.301).

[4] *See* Release Nos. 33–6977 (February 23, 1993) [58 FR 14628], IC–19284 (February 23, 1993) [58 FR 14848], 35–25746 (February 23, 1993) [58 FR 14999], and 33–6980 (February 23, 1993) [58 FR 15009] in which we comprehensively discuss the rules we adopted to govern mandated electronic filing. *See also* Release No. 33–7122 (December 19, 1994) [59 FR 67752], in which we made the EDGAR rules final and applicable to all domestic registrants; Release No. 33–7427 (July 1, 1997) [62 FR 36450], in which we adopted minor amendments to the EDGAR rules; Release No. 33–7472 (October 24, 1997) [62 FR 58647], in which we announced that, as of January 1, 1998, we would not accept in paper filings that we require filers to submit electronically; Release No. 34–40934 (January 12, 1999) [64 FR 2843], in which we made mandatory the electronic filing of Form 13F; Release No. 33–7684 (May 17, 1999) [64 FR 27888],

The revisions are being made primarily to support the amended rules and forms adopted by the Commission requiring that certain open-end management investment companies and insurance company separate accounts identify in their EDGAR submissions information relating to their series and classes (or contracts, in the case of separate accounts).[5] Specifically, we will be adding fields to certain EDGAR submission templates for use by certain open-end management investment company and insurance company separate account filers to identify their Investment Company Type and the series and classes (contracts) on behalf of which a filing is being made. Beginning February 6, 2006, filers would include information on existing series and classes (contracts) and new series and classes (contracts) on behalf of which a filing is made; they would also include information on series and classes (contracts) involved in mergers. (Filers were required to enter information on series and classes (contracts) in existence prior to February 6, 2006 via the www.edgarfiling.sec.gov Web site to obtain identifiers prior to that date.)

In addition, revisions are being made to support the requirement to file Form 25–NSE electronically.[6]

As a result of the adoption of securities offering reform initiatives, the submission of types S–2, S–2/A, F–2, F–2/A were eliminated. Amendments to these form types filed after December 1, 2005 must comply with the requirements of Forms S–1/A, S–3/A, F–1/A or F–3/A as appropriate.

The recent enactment of the Energy Policy Act of 2005 will result in the repeal of the Public Utility Holding Company Act of 1935 (''1935 Act'') effective February 8, 2006. Therefore, the EDGAR system will no longer accept 1935 Act filings as of 5:30 PM on February 8, 2006. Submission types and references to the 1935 Act will be removed from the EDGAR Filer Manual in this release of the volume, but 1935 Act submission types will be accepted for the period ending at the close of business on February 8th following the February 6th publication of the manual. The 1935 Act submission types will be removed from EDGARLink in a future release.

For EDGAR Release 9.3, the EDGARLink software and submission templates 1, 2, and 3 will be updated to support the aforementioned submission type changes. All investment company filers should download and use the new software and submission templates to ensure that submissions will be processed successfully. Previous versions of the software and templates will not work properly for submissions that require series and class (contract) data. Notice of the update has previously been provided on the EDGAR Filing Web site and on the Commission's public Web site. The discrete updates are reflected on the EDGAR Filing Web site and in the updated Filer Manual Volumes.

Along with adoption of the Filer Manual, we are amending Rule 301 of Regulation S–T to provide for the incorporation by reference into the Code of Federal Regulations of today's revisions. This incorporation by reference was approved by the Director of the Federal Register in accordance with 5 U.S.C. 552(a) and 1 CFR part 51.

You may obtain paper copies of the updated Filer Manual at the following address: Public Reference Room, U.S. Securities and Exchange Commission, 100 F Street, NE., Room 1580, Washington, DC 20549. We will post electronic format copies on the Commission's Web site; the address for the Filer Manual is *http://www.sec.gov/info/edgar.shtml.* You may also obtain copies from Thomson Financial, the paper document contractor for the Commission, at (800) 638–8241.

Since the Filer Manual relates solely to agency procedures or practice, publication for notice and comment is not required under the Administrative Procedure Act (APA).[7] It follows that the requirements of the Regulatory Flexibility Act[8] do not apply.

The effective date for the updated Filer Manual and the rule amendments is February 6, 2006. In accordance with the APA,[9] we find that there is good cause to establish an effective date less than 30 days after publication of these rules. The EDGAR system upgrade to Release 9.3 is scheduled to become available on February 6, 2006. The Commission believes that it is necessary to coordinate the effectiveness of the updated Filer Manual with the scheduled system upgrade.

Statutory Basis

We are adopting the amendments to Regulation S–T under Sections 6, 7, 8, 10, and 19(a) of the Securities Act of 1933,[10] Sections 3, 12, 13, 14, 15, 23, and 35A of the Securities Exchange Act of 1934,[11] Section 319 of the Trust Indenture Act of 1939,[12] and Sections 8, 30, 31, and 38 of the Investment Company Act of 1940.[13]

List of Subjects in 17 CFR Part 232

Incorporation by reference, Reporting and recordkeeping requirements, Securities.

Text of the Amendment

■ In accordance with the foregoing, Title 17, Chapter II of the Code of Federal Regulations is amended as follows:

PART 232—REGULATION S–T—GENERAL RULES AND REGULATIONS FOR ELECTRONIC FILINGS

■ 1. The authority citation for part 232 continues to read in part as follows:

Authority: 15 U.S.C. 77f, 77g, 77h, 77j, 77s(a), 77sss(a), 78c(b), 78*l*, 78m, 78n, 78o(d), 78w(a), 78*ll*(d), 79t(a), 80a–8, 80a–29, 80a–30, 80a–37, and 7201 *et seq.*; and 18 U.S.C. 1350.

* * * * *

■ 2. Section 232.301 is revised to read as follows:

§ 232.301 EDGAR Filer Manual.

Filers must prepare electronic filings in the manner prescribed by the EDGAR Filer Manual, promulgated by the Commission, which sets out the

in which we adopted amendments to implement the first stage of EDGAR modernization; Release No. 33–7855 (April 24, 2000) [65 FR 24788], in which we implemented EDGAR Release 7.0; Release No. 33–7999 (August 7, 2001) [66 FR 42941], in which we implemented EDGAR Release 7.5; Release No. 33–8007 (September 24, 2001) [66 FR 49829], in which we implemented EDGAR Release 8.0; Release No. 33–8224 (April 30, 2003) [68 FR 24345], in which we implemented EDGAR Release 8.5; Release Nos. 33–8255 (July 22, 2003) [68 FR 44876] and 33–8255A (September 4, 2003) [68 FR 53289] in which we implemented EDGAR Release 8.6; Release No. 33–8409 (April 19, 2004) [69 FR 21954] in which we implemented EDGAR Release 8.7; Release No. 33–8454 (August 6, 2004) [69 FR 49803] in which we implemented EDGAR Release 8.8; Release No. 33–8528 (February 3, 2005) [70 FR 6573] in which we implemented EDGAR Release 8.10; Release No. 33–8573 (May 19, 2005) [70 FR 30899] in which we implemented EDGAR Release 9.0; Release No. 33–8612 (September 21, 2005) [70 FR 57130] in which the Commission granted the authorization to publish the release adopting the reorganized EDGAR Filer Manual; and Release No. 33–8633 (November 1, 2005) [70 FR 67350] in which we implemented EDGAR Release 9.2.

[5] *See* Rulemaking for EDGAR System, Release No. 33–8590 (July 18, 2005) [70 FR 43558 (July 27, 2005)].

[6] In a prior release, Commission updates to the Filer Manual supporting the issuer submission type 25 were included. This version of the manual includes updates for submission type 25–NSE which will be filed by the National Securities Exchanges. Submission type 25 and form type 25–NSE will both be a required electronic form starting on April 24, 2006. See Removal From Listing and Registration of Securities Pursuant to Section 12(d) of the Securities Exchange Act of 1934, Release No. 34–52029 (July 14, 2005) [70 FR 42456].

[7] 5 U.S.C. 553(b).

[8] 5 U.S.C. 601–612.

[9] 5 U.S.C. 553(d)(3).

[10] 15 U.S.C. 77f, 77g, 77h, 77j, and 77s(a).

[11] 15 U.S.C. 78c, 78*l*, 78m, 78n, 78o, 78w, and 78*ll*.

[12] 15 U.S.C. 77sss.

[13] 15 U.S.C. 80a–8, 80a–29, 80a–30, and 80a–37.

technical formatting requirements for electronic submissions. The requirements for becoming an EDGAR Filer and updating company data are set forth in the EDGAR Filer Manual, Volume I: ''General Information,'' Version 2 (February 2006). The requirements for filing on EDGAR are set forth in the EDGAR Filer Manual, Volume II: ''EDGAR Filing,'' Version 3 (February 2006). Additional provisions applicable to Form N–SAR filers are set forth in the EDGAR Filer Manual, Volume III: ''N–SAR Supplement,'' Version 1 (September 2005). All of these provisions have been incorporated by reference into the Code of Federal Regulations, which action was approved by the Director of the Federal Register in accordance with 5 U.S.C. 552(a) and 1 CFR part 51. You must comply with these requirements in order for documents to be timely received and accepted. You can obtain paper copies of the EDGAR Filer Manual from the following address: Public Reference Room, U.S. Securities and Exchange Commission, 100 F Street, NE., Room 1580, Washington, DC 20549 or by calling Thomson Financial at (800) 638–8241. Electronic copies are available on the Commission's Web site. The address for the Filer Manual is *http://www.sec.gov/info/edgar.shtml.* You can also photocopy the document at the National Archives and Records Administration (NARA). For information on the availability of this material at NARA, call 202–741–6030, or go to: *http://www.archives.gov/federal_register/code_of_federal_regulations/ibr_locations.html.*

By the Commission.

Dated: January 27, 2006.

Nancy M. Morris,

Secretary.

[FR Doc. 06–945 Filed 2–1–06; 8:45 am]

BILLING CODE 8010–01–P

DEPARTMENT OF THE TREASURY

Alcohol and Tobacco Tax and Trade Bureau

27 CFR Parts 19, 24, 25, 26 and 70

[T.D. TTB–41]

RIN 1513–AB17

Quarterly Excise Tax Filing for Small Alcohol Excise Taxpayers (2005R–441P)

AGENCY: Alcohol and Tobacco Tax and Trade Bureau, Treasury.

ACTION: Temporary rule; Treasury decision.

SUMMARY: This temporary rule implements the quarterly excise tax payment procedure for small alcohol excise taxpayers contained in section 11127 of the Safe, Accountable, Flexible, Efficient Transportation Equity Act: A Legacy for Users, which amended section 5061 of the Internal Revenue Code of 1986. Before passage of this law, most Federal alcohol excise taxpayers paid the tax on a semimonthly basis. We are amending the applicable regulations on a temporary basis to incorporate the legislative change allowing quarterly payments. We also are soliciting comments from all interested parties on the implementation of this new procedure through a notice of proposed rulemaking published elsewhere in this issue of the **Federal Register**.

DATES: *Effective Date:* This temporary rule is effective on January 1, 2006.

FOR FURTHER INFORMATION CONTACT: For questions concerning quarterly filing procedures, contact James S. McCoy, National Revenue Center, Alcohol and Tobacco Tax and Trade Bureau (513–684–2120); for other questions concerning this document, contact Marjorie Ruhf, Regulations and Rulings Division, Alcohol and Tobacco Tax and Trade Bureau (202–927–8202 or *marjorie.ruhf@ttb.gov).*

SUPPLEMENTARY INFORMATION:

Background

This temporary rule implements the statutory change contained in section 11127 of the Safe, Accountable, Flexible, Efficient Transportation Equity Act: A Legacy for Users, Pub. L. 109–59, 119 Stat. 1144 (''the Act''), signed by President Bush on August 10, 2005. Section 11127 of the Act amended section 5061(d) of the Internal Revenue Code of 1986 (IRC), 26 U.S.C. 5061(d), by redesignating paragraphs (4) and (5) as paragraphs (5) and (6), respectively, and by inserting a new paragraph (4) which allows certain Federal alcohol excise taxpayers to pay taxes quarterly, rather than on a semimonthly basis as provided in section 5061(d) before the amendment. This new provision applies to quarterly tax payment periods beginning on and after January 1, 2006.

New paragraph (4) of section 5061(d) specifically references taxes imposed under subparts A, C, and D of part I of subchapter A of chapter 51 of the IRC and section 7652 of the IRC. The taxes imposed under subparts A, C, and D involve gallonage taxes on distilled spirits (26 U.S.C. 5001), wines (26 U.S.C. 5041), and beer (26 U.S.C. 5051). These taxes apply to spirits, wines, and beer produced in or imported into the United States. The Alcohol and Tobacco Tax and Trade Bureau (TTB) collects these taxes from proprietors of domestic bonded premises pursuant to regulations contained in 27 CFR parts 19, 24, and 25, and the Bureau of Customs and Border Protection (CBP) collects these taxes from importers of these products pursuant to regulations contained in title 19 of the CFR. Section 7652 (26 U.S.C. 7652) imposes a tax on spirits, wines, and beer coming to the United States from Puerto Rico and the U.S. Virgin Islands. TTB collects these taxes from regulated premises in Puerto Rico under regulations in 27 CFR part 26, and CBP collects these taxes pursuant to title 19 of the CFR when the products in question come to the United States from the U.S. Virgin Islands. Tax payments in connection with transactions that are subject to regulations administered by CBP are not dealt with in this document.

The provisions of new paragraph (4) apply to ''any taxpayer who reasonably expects to be liable for not more than $50,000 in taxes * * * for the calendar year and who was liable for not more than $50,000 in such taxes in the preceding calendar year.'' In such a case the taxpayer must pay the tax no later than the 14th day after the last day of the calendar quarter during which the action giving rise to the tax (that is, withdrawal, removal, entry, and bringing in from Puerto Rico) occurs. The statute defines a ''calendar quarter'' as the three-month period ending on March 31, June 30, September 30, or December 31.

New paragraph (4) also provides that the quarterly tax payment procedure does not apply to a taxpayer for any remaining portion of the calendar year following the date on which the aggregate amount of tax due from the taxpayer exceeds $50,000. If at any point during the year the taxpayer's liability exceeds $50,000, any tax that has not been paid on that date becomes due on the 14th day after the last day of the semimonthly period in which that date falls. Thus, in effect, a taxpayer whose taxpayments exceed the $50,000 limit during the calendar year is required to revert to the semimonthly payment procedure for the remainder of the year.

Basic Interpretative Considerations

Based on a careful reading of the statutory language, TTB has applied the following considerations in drafting the implementing regulatory changes set forth in this document.

1. We note that the longer deferral period allowed under new paragraph (4) will result in a larger unpaid tax liability, with a consequent impact on bonds as discussed below in this document. While we recognize that the intent of the statutory change is to ease the regulatory burden on small taxpayers, we also must acknowledge the need to protect the revenue by ensuring that unpaid taxes are covered by appropriate bond amounts. If a taxpayer otherwise eligible for the new quarterly payment procedure does not wish to adjust the penal sum of its bond, that taxpayer should be allowed to continue to make taxpayments and file returns on a semimonthly basis.

Accordingly, we have decided to treat the quarterly payment procedure as optional rather than mandatory in the implementing regulations in order to provide flexibility to those taxpayers. Looking at section 5061 as a whole, and noting the placement of the semimonthly payment procedure in paragraph (d)(1) as a provision of general applicability, we believe this interpretation is permissible because it makes the semimonthly procedure available to any taxpayer eligible for deferred payment of taxes, even if the taxpayer is also eligible for the quarterly payment procedure. The Conference Report of the Committee of Conference on H.R. 3, Report 109–203 at page 1133, describes the statutory change as follows: ''[D]omestic producers and importers of distilled spirits, wine, and beer with excise tax liability of $50,000 or less attributable to such articles in the preceding calendar year may file returns and pay taxes within 14 days after the end of the calendar quarter instead of semi-monthly.'' The use of the word ''may'' indicates Congress viewed the continued use of the semimonthly procedure as an option.

2. Based on the wording of new paragraph (4) and of redesignated paragraph (5) of section 5061(d), we believe that the ''special rule for taxes due in September'' properly applies only to semimonthly return periods and therefore does not apply to quarterly payments under new paragraph (4). Therefore we have changed the regulations referring to this payment to restrict its application to taxpayers who file semimonthly returns.

3. New paragraph (4) extends the quarterly payment option to a taxpayer who reasonably expects to be liable for not more than $50,000 in alcohol excise taxes during the calendar year and who was liable for not more than $50,000 in the preceding calendar year. We understand ''taxpayer'' to mean an entity (including an individual, partnership or corporation) with a single taxpayer identification number. A single taxpayer may have multiple locations; if so, the combined liability of all locations and the same taxable commodity must be considered in determining eligibility for quarterly payments.

4. Since the taxes imposed by 26 U.S.C. 5001, 5041 and 5051 apply to commodities produced in or imported into the United States, a taxpayer who has both domestic operations and import transactions must combine the tax liability on the domestic operations and the imports to determine eligibility for the quarterly procedure.

5. New paragraph (4) makes no mention of controlled groups. Accordingly, we believe it is appropriate to take into account only the taxpayer's own liability in determining eligibility for quarterly payments, even if the taxpayer is considered to be a member of a controlled group for other purposes under the IRC. We also note that there may be some individual taxpayers who are eligible for the quarterly payment procedure but who are required to pay taxes by electronic fund transfer (EFT) because they are part of a controlled group that owes more than $5 million in distilled spirits, wine, or beer excise taxes per year. See 26 U.S.C. 5061(e). These individual taxpayers must transmit the quarterly payments via EFT.

6. With regard to the requirement that a taxpayer ''reasonably expect'' to be liable for not more than $50,000 in a tax year, we believe it is appropriate to define ''reasonably expect'' in the implementing regulations to mean both that the taxpayer was not liable for more than $50,000 in taxes the previous year and that there are no other existing or anticipated circumstances (such as an increase in production capacity) that would cause the taxpayer's liability to increase beyond that limit.

7. If a taxpayer exceeds $50,000 in tax liability during a taxable year and therefore must revert to the semimonthly payment procedure, that taxpayer may resume quarterly payments only after a full calendar year has passed in which the taxpayer's liability did not exceed $50,000. New taxpayers will be eligible to file quarterly returns in their first year of business simply if they reasonably expect to owe less than $50,000 in taxes during that calendar year.

Effect on Bond Amounts

The bond regulations that apply to domestic producers of distilled spirits and wine at 27 CFR 19.245 and 24.148, and the regulations covering deferral bonds for proprietors bringing distilled spirits, wine, and beer to the United States from Puerto Rico at 27 CFR 26.66 (for distilled spirits), 26.67 (for wine) and 26.68 (for beer), require proprietors to calculate the penal sum of their deferral bonds to cover the unpaid tax that is chargeable against the bond at any one time. We do not believe that new paragraph (4) requires any changes to these regulatory provisions, the terms of which will clearly apply to taxpayers who use the quarterly payment procedure. We note, however, that it would be prudent for a taxpayer who uses the quarterly payment procedure to review the current deferral bond coverage, which in all likelihood is based on anticipated semimonthly taxes plus a 14-day deferral period. Such taxpayers may need to increase the deferral coverage for anticipated quarterly taxes because of the longer three-month plus 14-day deferral period.

We note that the penal sum amount set by regulation at 27 CFR 25.93 for a brewer's bond is 10 percent of the maximum amount of annual tax liability, with a minimum amount of $1,000. This 10 percent/minimum amount provides adequate bond coverage for small brewers who incur less than $50,000 of annual taxable liability each year and who file on a semimonthly basis. However, we also note that the average maximum tax liability per return period for small brewers who pay quarterly will be approximately 29 percent of their annual liability. Our calculation indicates that the average maximum liability for a quarter of the year plus the additional liability incurred during the 14 day period provided for payment, equals between 2.5 and 3.0 times the amount of the bond coverage presently required. Thus we conclude that required bond coverage under § 25.93 is inadequate for small brewers who pay taxes quarterly. As a result, we are increasing the required bond coverage for small brewers who pay excise taxes quarterly to 29 percent of the maximum amount of annual tax liability. Further, such increased bonding liability will apply only to small brewers who pay excise taxes quarterly and not to other small brewers who continue to pay semimonthly.

Effect on Reporting Requirements

In general, proprietors of distilled spirits plants, bonded wine cellars, and breweries must file monthly reports of operations. Since proprietors who are small taxpayers may be filing quarterly tax returns, we considered whether

these proprietors should file quarterly reports of operations as well.

The beer regulations at 27 CFR 25.297(b) already allow brewers to file quarterly reports if they produce less than 10,000 barrels of beer during a calendar year. This level of activity represents a tax liability of $70,000 per year at the reduced rate of tax for small brewers, so brewers eligible to file quarterly returns under new paragraph (4) of section 5061(d) are already eligible to file quarterly reports under the existing rule. Therefore, we have not made any changes to the regulations regarding the brewers' report of operations.

The wine regulations at 27 CFR 24.300(g)(2) already allow small proprietors to file an annual, rather than a monthly, report of operations if they are eligible to pay taxes on an annual basis and their total wine to be accounted for in a calendar month does not exceed 20,000 gallons. We believe it is appropriate to allow wine premises proprietors to file quarterly reports of operations if they are eligible to make quarterly tax payments. Accordingly, we have revised paragraph (g) of § 24.300 to give quarterly taxpayers the option of filing quarterly reports of operations. However, in this revised text we have set a maximum activity level of 60,000 gallons of wine to be accounted for in a calendar quarter in order to ensure that proprietors with very large production or storage capacity who pay little or no tax will continue to file monthly reports of operations. We are also making a corresponding conforming change to 27 CFR 24.313, Inventory records.

For distilled spirits plant proprietors, there are four operational report forms, and there is no provision in the TTB regulations specifying a reporting interval less frequent than monthly. We do not believe this document is the appropriate vehicle for making a change in the timing for reports of operations. Because of the short time available before this temporary rule takes effect, we will defer consideration of adoption of a quarterly report of operations for distilled spirits plant proprietors.

Other Considerations

The TTB regulations include provisions that allow TTB to require prepayment of taxes or to make a jeopardy assessment of taxes if we believe such action is necessary to protect the revenue. We have reviewed those prepayment and jeopardy assessment provisions and have determined that no changes to them are needed in order for them to apply to taxpayers who pay on a quarterly basis.

We also considered whether to require the filing of a notice of intent by a taxpayer who chooses to make quarterly tax payments before the taxpayer begins the procedure. Since we can determine from records we already have that a taxpayer appears to be eligible for the quarterly payment procedure (in particular, that the taxpayer's liability for the previous calendar year did not exceed $50,000), and because advance notice would serve no other useful purpose, we have decided not to require advance notice.

Discussion of Regulatory Amendments

In addition to the regulatory changes discussed above, we are including definitions of ''reasonably expects'' and ''taxpayer'' in the amended provisions of parts 19, 24, 25, and 26. We are also adding a definition of ''calendar quarter and quarterly'' to the definitions section of parts 19, 24, and 26. The following additional points are noted regarding the regulatory amendments contained in this document:

Part 19

We are revising § 19.565 and amending §§ 19.522, 19.523, and 19.703 in part to accommodate the quarterly return procedure. In addition to the removal of the word ''semimonthly'' from the existing text, the revision of § 19.565 includes a reorganization of the text for editorial purposes.

Part 24

We are amending § 24.271, which prescribes the return periods available for proprietors who have deferral bonds, to accommodate the quarterly procedure.

Since 1990, part 24 has included § 24.273, which allows certain wine premises proprietors to file annual tax returns and pay taxes annually. Because the wine bond's coverage is split between operations coverage and deferral coverage, we were not limited by the existing language of section 5061, which specified semimonthly return periods for removals under a bond for deferred payment of taxes. Thus, we were able administratively to allow an annual return period for small proprietors who had no bond for deferred payment of taxes and who owed less than $1,000 per calendar year in taxes. New paragraph (4) of section 5061(d) does not affect the right of eligible proprietors to continue to pay taxes on an annual basis under this regulation. However, we are revising § 24.273 to show that it is an exception to both semimonthly and quarterly return filing, and we are reorganizing the section for clarity.

Part 25

We are amending § 25.93 to change the bond penal sum for quarterly taxpayers, as discussed above. We are also amending §§ 25.164 and 25.164a, which cover tax return filing rules for brewers, to reflect the adoption of the quarterly return procedure. Finally, we are amending § 25.166 by replacing the reference to ''semimonthly'' returns.

Part 26

We are amending § 26.112, which concerns returns for taxes imposed under section 7652, to incorporate the quarterly taxpayment procedure.

Part 70

We are amending paragraph (a) of § 70.412, which summarizes alcohol tax return filing procedural rules, to include a reference to quarterly returns.

Temporary Rule

Based on the January 1, 2006, effective date of the statutory change to section 11127, TTB believes that proper administration and enforcement of those requirements necessitates the immediate adoption of implementing regulations as a temporary rule pursuant to 5 U.S.C. 553(b)(A) and (B), and 5 U.S.C. 553(d)(1), (2), and (3). TTB believes that such implementing action ensures that affected industry members will have timely knowledge of the regulatory requirements that will enable them to obtain the benefits of the statutory change.

Public Participation

To submit comments on these regulations, please refer to the notice of proposed rulemaking on this subject published in the Proposed Rules section of this issue of the **Federal Register**.

Regulatory Flexibility Act

Because no notice of proposed rulemaking is required for temporary rules, the provisions of the Regulatory Flexibility Act (5 U.S.C. 601 *et seq.*) do not apply. Pursuant to section 7805(f) of the Internal Revenue Code, we will submit this temporary rule to the Chief Counsel for Advocacy of the Small Business Administration for comment on the impact of the temporary regulations.

Executive Order 12866

It has been determined that this temporary rule is not a significant regulatory action as defined in E.O. 12866. Therefore, a regulatory assessment is not necessary.

Paperwork Reduction Act

Under the Paperwork Reduction Act of 1995, no persons are required to respond to a collection of information unless it displays a valid Office of Management and Budget (OMB) control number. The collections of information contained in the regulations amended by this temporary rule have been previously reviewed and approved by OMB in accordance with the Paperwork Reduction Act of 1995 under control numbers 1513–0053, 1513–0083, and 1513–0090. There is no new collection of information imposed by this Treasury decision. There is a decrease in the reporting or recordkeeping burden resulting from the change from semimonthly to quarterly tax return periods for certain small taxpayers.

Inapplicability of Prior Notice and Comment and Delayed Effective Date Procedures

It has been determined that prior notice and comment procedures are not required pursuant to 5 U.S.C. 553(b)(A), and a delayed effective date is not required pursuant to 5 U.S.C. 553(d)(2).

Drafting Information

Charles N. Bacon, Daniel J. Hiland, Ramona Hupp, and Marjorie D. Ruhf of the Regulations and Rulings Division, Alcohol and Tobacco Tax and Trade Bureau, drafted this document.

List of Subjects

27 CFR Part 19

Administrative practice and procedure, Alcohol and alcoholic beverages, Authority delegations (Government agencies), Caribbean Basin Initiative, Chemicals, Claims, Customs duties and inspection, Electronic funds transfers, Excise taxes, Exports, Gasohol, Imports, Labeling, Liquors, Packaging and containers, Puerto Rico, Reporting and recordkeeping requirements, Research, Security measures, Spices and flavorings, Stills, Surety bonds, transportation, Vinegar, Virgin Islands, Warehouses, Wine.

27 CFR Part 24

Administrative practice and procedure, Claims, Electronic fund transfers, Excise taxes, Exports, Food additives, Fruit juices, Labeling, Liquors, Packaging and containers, Reporting and recordkeeping requirements, Research, Scientific equipment, Spices and flavoring, Surety bonds, Vinegar, Warehouses, Wine.

27 CFR Part 25

Administrative practice and procedure, Beer, Claims, Electronic funds transfers, Excise taxes, Exports, Labeling, Packaging and containers, Reporting and recordkeeping requirements, Research, Surety bonds.

27 CFR Part 26

Administrative practice and procedure, Alcohol and alcoholic beverages, Caribbean Basin Initiative, Claims, Customs duties and inspection, Electronic funds transfers, Excise taxes, Packaging and containers, Puerto Rico, Reporting and recordkeeping requirements, Surety bonds, Virgin Islands, Warehouses.

27 CFR Part 70

Administrative practice and procedure, Claims, Excise taxes, Freedom of information, Law enforcement, Penalties, Reporting and recordkeeping requirements, Surety bonds.

Amendments to the Regulations

For the reasons discussed in the preamble, TTB amends 27 CFR parts 19, 24, 25, 26 and 70 as follows:

PART 19—DISTILLED SPIRITS PLANTS

■ 1. The authority citation for part 19 continues to read as follows:

Authority: 19 U.S.C. 81c, 1311; 26 U.S.C. 5001, 5002, 5004–5006, 5008, 5010, 5041, 5061, 5062, 5066, 5081, 5101, 5111–5113, 5142, 5143, 5146, 5148, 5171–5173, 5175, 5176, 5178–5181, 5201–5204, 5206, 5207, 5211–5215, 5221–5223, 5231, 5232, 5235, 5236, 5241–5243, 5271, 5273, 5301, 5311–5313, 5362, 5370, 5373, 5501–5505, 5551–5555, 5559, 5561, 5562, 5601, 5612, 5682, 6001, 6065, 6109, 6302, 6311, 6676, 6806, 7011, 7510, 7805; 31 U.S.C. 9301, 9303, 9304, 9306.

■ 2. Section 19.11 is amended by adding in appropriate alphabetical order a definition of ''calendar quarter and quarterly'' to read as follows:

§ 19.11 Meaning of terms.

* * * * *

Calendar quarter and quarterly. These terms refer to the three-month period ending on March 31, June 30, September 30, or December 31.

* * * * *

■ 3. Section 19.522 is amending by revising paragraph (a) to read as follows:

§ 19.522 Taxes to be collected by returns.

(a)(1) *Deferred payment of taxes.* The tax on spirits to be withdrawn from bond for deferred payment of tax shall be paid pursuant to a return on Form 5000.24, Excise Tax Return. The return, Form 5000.24, shall be executed and filed for each return period notwithstanding that no tax is due for payment for such period. The proprietor of each bonded premises shall include, for payment, on his return on Form 5000.24, the full amount of distilled spirits tax determined in respect of all spirits released for withdrawal from the bonded premises on determination of tax during the period covered by the return (except spirits on which tax has been prepaid).

(2) *Return periods*—(i) *Definitions.* For purposes of this section, the following terms have the meanings indicated:

Reasonably expects. When used with reference to a taxpayer, *reasonably expects* means the taxpayer was not liable for more than $50,000 in taxes the previous year and there is no other existing or anticipated circumstance known to the taxpayer (such as an increase in production capacity) that would cause the taxpayer's liability to increase beyond that limit.

Taxpayer. A *taxpayer* is a person who is liable for excise tax imposed with respect to distilled spirits by 26 U.S.C. 5001 and 7652 under the same Employer Identification Number as defined in 26 CFR 301.7701–12.

(ii) *Semimonthly return period.* Except in the case of a taxpayer who qualifies for, and chooses to use, quarterly return periods as provided in paragraph (b)(3) of this section, all taxpayers must use semimonthly return periods for deferred payment of tax. The semimonthly return periods shall run from the 1st day through the 15th day of each month, and from the 16th day through the last day of each month, except as otherwise provided in § 19.523(c).

(iii) *Quarterly return period.* Effective January 1, 2006, a taxpayer who reasonably expects to be liable for not more than $50,000 in taxes with respect to distilled spirits imposed by 26 U.S.C. 5001 and 7652 for the current calendar year, and who was liable for not more than $50,000 in such taxes in the preceding calendar year, may choose to use a quarterly return period. In such a case the last day for payment of tax and filing of the return will be the 14th day after the last day of the calendar quarter. However, the taxpayer may not use the quarterly return period procedure for any portion of the calendar year following the first date on which the aggregate amount of tax due from the taxpayer during the calendar year exceeds $50,000, and any tax which has not been paid on that date will be due on the 14th day after the last day of the semimonthly period in which that date occurs.

* * * * *

■ 4. In § 19.523, the first sentence of paragraph (a) is amended by removing the word ''Where'' and adding, in its place, the words ''Except when payment is pursuant to a quarterly return as provided in paragraph (d) of this section, where'' and a new paragraph (d) is added to read as follows:

§ 19.523 Time for filing returns.

* * * * *

(d) *Payment pursuant to quarterly return.* Where the proprietor of bonded premises has withdrawn spirits from such premises on determination and before payment of tax, and the proprietor uses quarterly return periods as provided in § 19.522(b)(3), the proprietor shall file a quarterly tax return covering such spirits on Form 5000.24, and remittance, as required by § 19.525, not later than the 14th day after the last day of the quarterly return period. If the due date falls on a Saturday, Sunday, or legal holiday, the return and remittance shall be due on the immediately preceding day which is not a Saturday, Sunday, or legal holiday.

■ 5. Section 19.565 is revised to read as follows:

§ 19.565 Shortages of bottled distilled spirits.

(a) *Determination of shortage.* Unexplained shortages shall be determined by comparing the spirits recorded to be on hand with the results of the quantitative determination of the spirits found to be on hand by actual count during the physical inventory required by § 19.402. When the recorded quantity is greater than the quantity determined by the physical inventory, the difference is an unexplained shortage. The records shall be adjusted to reflect the physical inventory.

(b) *Payment of tax on shortage.* An unexplained shortage of bottled distilled spirits shall be taxpaid:

(1) Immediately on a prepayment return on Form 5000.24, or

(2) On the return on Form 5000.24 for the return period during which the shortage was ascertained.

(Sec. 201, Pub. L. 85–859, 72 Stat. 1323, as amended (26 U.S.C. 5008))

■ 6. In § 19.703, paragraph (a) is amended by removing the words ''semimonthly tax return'' and adding, in their place, the words ''next deferred payment of tax''.

PART 24—WINE

■ 7. The authority citation for part 24 continues to read as follows:

Authority: 5 U.S.C. 552(a); 26 U.S.C. 5001, 5008, 5041, 5042, 5044, 5061, 5062, 5081, 5111–5113, 5121, 5122, 5142, 5143, 5148, 5173, 5206, 5214, 5215, 5351, 5353, 5354, 5356, 5357, 5361, 5362, 5364–5373, 5381–5388, 5391, 5392, 5511, 5551, 5552, 5661, 5662, 5684, 6065, 6091, 6109, 6301, 6302, 6311, 6651, 6676, 7011, 7302, 7342, 7502, 7503, 7606, 7805, 7851; 31 U.S.C. 9301, 9303, 9304, 9306.

■ 8. Section 24.10 is amended by adding in appropriate alphabetical order a definition of ''calendar quarter and quarterly'' to read as follows:

§ 24.10 Meaning of terms.

* * * * *

Calendar quarter and quarterly. These terms refer to the three-month period ending on March 31, June 30, September 30, or December 31.

* * * * *

■ 9. Section 24.271 is amended by revising the section heading and paragraphs (a) and (b) and the heading of paragraph (c), and by adding headings to paragraphs (c)(1) and (c)(1)(i), to read as follows:

§ 24.271 Payment of tax by return with remittance.

(a) *General.* The tax on wine is paid by an Excise Tax Return, Form 5000.24, which is filed with remittance (check, cash, or money order) for the full amount of tax due. Prepayments of tax on wine during the period covered by the return are shown separately on the Excise Tax Return form. If no tax is due for the return period, the filing of a return is not required.

(b) *Return periods and due dates.* (1) *Return periods.* (i) *Definitions.* For purposes of this section, the following terms have the meanings indicated:

Reasonably expects. When used with reference to a taxpayer, *reasonably expects* means the taxpayer was not liable for more than $50,000 in taxes the previous year and there is no other existing or anticipated circumstance known to the taxpayer (such as an increase in production capacity) that would cause the taxpayer's liability to increase beyond that limit.

Taxpayer. A *taxpayer* is a person who is liable for excise tax imposed with respect to wine by 26 U.S.C. 5041 and 7652 under the same Employer Identification Number as defined in 26 CFR 301.7701–12.

(ii) *Semimonthly return period.* Except in the case of a taxpayer who qualifies for, and chooses to use, the annual return period as provided in § 24.273 or the quarterly return period as provided in paragraph (b)(1)(iii) of this section, all taxpayers who have filed a bond for deferred payment of taxes must use semimonthly return periods. The semimonthly return periods shall run from the 1st day through the 15th day of each month, and from the 16th day through the last day of each month, except as otherwise provided in paragraph (c) of this section.

(iii) *Quarterly return period.* Effective January 1, 2006, a taxpayer who has filed a bond for deferred payment of taxes, who reasonably expects to be liable for not more than $50,000 in taxes with respect to wine imposed by 26 U.S.C. 5041 and 7652 for the current calendar year, and who was liable for not more than $50,000 in such taxes in the preceding calendar year, may choose to use a quarterly return period. In such a case the last day for payment of tax and filing the return will be the 14th day after the last day of the calendar quarter. However, the taxpayer may not use the quarterly return period procedure for any portion of the calendar year following the first date on which the aggregate amount of tax due from the taxpayer during the calendar year exceeds $50,000, and any tax which has not been paid on that date will be due on the 14th day after the last day of the semimonthly period in which that date occurs.

(2) *Semimonthly and quarterly tax return due dates.* The taxpayer shall file the semimonthly or quarterly return, with remittance, for each return period not later than the 14th day after the last day of the return period. If the due date falls on a Saturday, Sunday, or legal holiday, the return and remittance shall be due on the immediately preceding day which is not a Saturday, Sunday, or legal holiday, except as otherwise provided in paragraph (c)(3) of this section.

(c) *Special September rule for taxes due by semimonthly return.* (1) *Division of second semimonthly period.* (i) *General.* * * *

* * * * *

■ 10. Section 24.273 is revised to read as follows:

§ 24.273 Exception to filing semimonthly or quarterly tax returns.

(a) *Eligibility for annual filing.* A proprietor may file the Excise Tax Return, Form 5000.24, and remittance, within 30 days after the end of the calendar year instead of semimonthly or quarterly as provided in § 24.271, if the proprietor has not given a bond for deferred payment of wine excise tax and if the proprietor:

(1) Paid wine excise taxes in an amount less than $1,000 during the previous calendar year, or

(2) Is the proprietor of a newly established bonded wine premises and expects to pay less than $1,000 in wine

excise taxes before the end of the calendar year.

(b) *Loss of eligibility for annual filing.* (1) If before the close of the current calendar year the wine excise tax owed will exceed the amount of the coverage under the proprietor's operations bond for wine removed from bonded wine premises on which tax has been determined but not paid, the proprietor will file an Excise Tax Return with the total remittance on the date the wine excise tax owed will exceed such amount and file an aggregate Excise Tax Return within 30 days after the close of the calendar year showing the total wine tax liability for such calendar year. If before the close of the current calendar year the wine excise tax liability (including any amounts paid or owed) equals $1,000 or more, the proprietor will commence semimonthly or quarterly filing of the wine Excise Tax Returns and making of payments as required by § 24.271.

(2) If there is a jeopardy to the revenue, the appropriate TTB officer may deny the exceptions to filing tax returns provided in this section at any time.

(c) *Other rules apply.* A proprietor who files under this section is subject to the failure to pay or file provisions of § 24.274.

■ 11. Section 24.300 is amended by revising paragraph (g) to read as follows:

§ 24.300 General.

* * * * *

(g) *F 5120.17, Report of Bonded Wine Premises Operations.* A proprietor who conducts bonded wine premises operations must complete and submit a F 5120.17 in accordance with the instructions on the form.

(1) *Monthly report.* The proprietor must submit F 5120.17 on a monthly basis, except as otherwise provided in paragraph (g)(2) or (g)(3) of this section.

(2) *Quarterly or annual report.* (i) *General.* A proprietor may file a completed F 5120.17 on a quarterly or annual basis if the proprietor meets the criteria in paragraph (g)(2)(ii) or (g)(2)(iii) of this section. To begin the quarterly or annual filing of a report of bonded wine premises operations, a proprietor must state the intent to do so in the ''Remarks'' section when filing the prior month's F 5120.17. A proprietor who is commencing operations during a calendar year and expects to meet these criteria may use a letter notice to the appropriate TTB officer and file F 5120.17 quarterly or annually for the remaining portion of the calendar year. If a proprietor becomes ineligible for quarterly or annual filing by exceeding the applicable tax liability or activity limit, the proprietor must file F 5120.17 for that month and for all subsequent months of the calendar year. If there is a jeopardy to the revenue, the appropriate TTB officer may at any time require any proprietor otherwise eligible for quarterly or annual filing of a report of bonded wine premises operations to file such report monthly.

(ii) *Eligibility for quarterly report filing.* In order to be eligible to file F 5120.17 on a quarterly basis, the proprietor must be filing quarterly tax returns under § 24.271, and the proprietor must not expect the sum of the bulk and bottled wine to be accounted for in all tax classes to exceed 60,000 gallons for any one quarter during the calendar year when adding up the bulk and bottled wine on hand at the beginning of the month, bulk wine produced by fermentation, sweetening, blending, amelioration or addition of wine spirits, bulk wine bottled, bulk and bottled wine received in bond, taxpaid wine returned to bond, bottled wine dumped to bulk, inventory gains, and any activity written in the untitled lines of the report form which increases the amount of wine to be accounted for.

(iii) *Eligibility for annual report filing.* In order to be eligible to file F 5120.17 on an annual basis, the proprietor must be filing annual tax returns under § 24.273, and the proprietor must not expect the sum of the bulk and bottled wine to be accounted for in all tax classes to exceed 20,000 gallons for any one month during the calendar year when adding up the bulk and bottled wine on hand at the beginning of the month, bulk wine produced by fermentation, sweetening, blending, amelioration or addition of wine spirits, bulk wine bottled, bulk and bottled wine received in bond, taxpaid wine returned to bond, bottled wine dumped to bulk, inventory gains, and any activity written in the untitled lines of the report form which increases the amount of wine to be accounted for.

(3) *No reportable activity.* A proprietor who files a monthly F 5120.17 and does not expect an inventory change or any reportable operations to be conducted in a subsequent month or months may attach to the filed F 5120.17 a statement that, until a change in the inventory or a reportable operation occurs, a F 5120.17 will not be filed.

§ 24.313 [Amended]

■ 12. Section 24.313 is amended by removing the words ''monthly reports'' in the first sentence and adding, in their place, the words ''monthly or quarterly reports'' and by adding a new sentence following the second sentence, to read as follows: ''However, proprietors who file quarterly reports must select an annual inventory period that begins on the first day of a calendar quarter.''

PART 25—BEER

■ 13. The authority citation for part 25 continues to read as follows:

Authority: 19 U.S.C. 81c; 26 U.S.C. 5002, 5051–5054, 5056, 5061, 5091, 5111, 5113, 5142, 5143, 5146, 5148, 5222, 5401–5403, 5411–5417, 5551, 5552, 5555, 5556, 5671, 5673, 5684, 6011, 6061, 6065, 6091, 6109, 6151, 6301, 6302, 6311, 6313, 6402, 6651, 6656, 6676, 6806, 7011, 7342, 7606, 7805; 31 U.S.C. 9301, 9303–9308.

■ 14. Section 25.93 is amended by revising paragraph (a) to read as follows:

§ 25.93 Penal sum of bond.

(a)(1) *Brewers filing semimonthly tax returns.* For brewers filing tax returns and remitting taxes semimonthly under § 25.164(c)(2), the penal sum of the brewers bond must be equal to 10 percent of the maximum amount of tax calculated at the rates prescribed by law which the brewer will become liable to pay during a calendar year during the period of the bond on beer:

(i) Removed for transfer to the brewery from other breweries owned by the same brewer;

(ii) Removed without payment of tax for export or for use as supplies on vessels and aircraft;

(iii) Removed without payment of tax for use in research, development, or testing; and

(iv) Removed for consumption or sale.

(2) *Brewers filing quarterly tax returns.* For brewers filing tax returns and remitting taxes quarterly under § 25.164(c)(3), the penal sum of the brewers bond must be equal to 29 percent of the maximum amount of tax calculated at the rates prescribed by law which the brewer will become liable to pay during a calendar year during the period of the bond on beer:

(i) Removed for transfer to the brewery from other breweries owned by the same brewer;

(ii) Removed without payment of tax for export or for use as supplies on vessels and aircraft;

(iii) Removed without payment of tax for use in research, development, or testing; and

(iv) Removed for consumption or sale.

* * * * *

■ 15. In § 25.164:

■ a. The section heading is revised;

■ b. The first and second sentences of paragraph (a) are amended by removing the word ''semimonthly'';

■ c. Paragraphs (c) and (d) are revised;
■ d. The first sentence of paragraph (e)(1) is amended by adding the words ''or quarterly'' after ''semimonthly''; and
■ e. Paragraph (e)(2) is amended by adding the words ''or quarterly'' after ''semimonthly'' wherever it appears.

The revisions read as follows:

§ 25.164 Quarterly and semimonthly returns.

* * * * *

(c) *Return periods.*

(1) *Definitions.* For purposes of this section, the following terms have the meanings indicated:

Reasonably expects. When used with reference to a taxpayer, *reasonably expects* means the taxpayer was not liable for more than $50,000 in taxes the previous year and there is no other existing or anticipated circumstance known to the taxpayer (such as an increase in production capacity) that would cause the taxpayer's liability to increase beyond that limit.

Taxpayer. A *taxpayer* is a person who is liable for excise tax imposed with respect to beer by 26 U.S.C. 5051 and 7652 under the same Employer Identification Number as defined in 26 CFR 301.7701–12.

(2) *Semimonthly return period.* Except in the case of a taxpayer who qualifies for, and chooses to use, quarterly return periods as provided in paragraph (c)(3) of this section, all taxpayers must use semimonthly return periods for deferred payment of tax. The semimonthly return periods shall run from the brewer's business day beginning on the first day of each month through the brewer's business day beginning on the 15th day of that month, and from the brewer's business day beginning on the 16th day of the month through the brewer's business day beginning on the last day of the month, except as otherwise provided in § 25.164a.

(3) *Quarterly return period.* Effective January 1, 2006, a taxpayer who reasonably expects to be liable for not more than $50,000 in taxes with respect to beer imposed by 26 U.S.C. 5051 and 7652 for the current calendar year, and who was liable for not more than $50,000 in such taxes in the preceding calendar year, may choose to use a quarterly return period. In such a case the last day for payment of tax and filing of the return will be the 14th day after the last day of the calendar quarter. However, the taxpayer may not use the quarterly return period procedure for any portion of the calendar year following the first date on which the aggregate amount of tax due from the taxpayer during the calendar year exceeds $50,000, and any tax which has not been paid on that date will be due on the 14th day after the last day of the semimonthly period in which that date occurs.

(d) *Time for filing returns and paying tax.* Except as otherwise provided in § 25.164a for semimonthly tax returns, the brewer shall file the tax return, Form 5000.24, for each return period, and make remittance as required by this section, not later than the 14th day after the last day of the return period. If the due date falls on a Saturday, Sunday, or legal holiday, the return and remittance shall be due on the immediately preceding day which is not a Saturday, Sunday, or legal holiday, except as otherwise provided in § 25.164a(c).

* * * * *

■ 16. Section 25.164a is amended by revising the section heading and paragraph (a)(1) to read as follows:

§ 25.164a Special September rule for taxes due by semimonthly return.

(a) *Division of second semimonthly period.* (1) *General.* Except as otherwise provided in paragraph (a)(2) of this section, the second semimonthly period for the month of September shall be divided into two payment periods, from the 16th day through the 26th day, and from the 27th day through the 30th day. The brewer shall file a return, Form 5000.24, and make remittance, for the period September 16–26, no later than September 29. The brewer shall file a return on Form 5000.24, and make remittance, for the period September 27–30, no later than October 14.

* * * * *

■ 17. In § 25.166, the first sentence of paragraph (a) is amended by removing the words ''semimonthly return'' and adding, in their place, the words ''return for deferred payment of tax''.

PART 26—LIQUORS AND ARTICLES FROM PUERTO RICO AND THE VIRGIN ISLANDS

■ 18. The authority citation for part 26 continues to read as follows:

Authority: 19 U.S.C. 81c; 26 U.S.C. 5001, 5007, 5008, 5010, 5041, 5051, 5061, 5081, 5111, 5112, 5114, 5121, 5122, 5124, 5131–5134, 5141, 5146, 5148, 5207, 5232, 5271, 5276, 5301, 5314, 5555, 6001, 6301, 6302, 6804, 7101, 7102, 7651, 7652, 7805; 27 U.S.C. 203, 205; 31 U.S.C. 9301, 9303, 9304, 9306.

■ 19. Section 26.11 is amended by adding in appropriate alphabetical order a definition of ''calendar quarter and quarterly'' to read as follows:

§ 26.11 Meaning of terms.

* * * * *

Calendar quarter and quarterly. These terms refer to the three-month period ending on March 31, June 30, September 30, or December 31.

* * * * *

■ 20. Section 26.112 is amended by revising the section heading and paragraph (b) and the heading of paragraph (d), and by adding a heading to paragraph (d)(1) to read as follows:

§ 26.112 Returns for deferred payment of tax.

* * * * *

(b) *Return periods.* (1) *Definitions.* For purposes of this section, the following terms have the meanings indicated:

Reasonably expects. When used with reference to a taxpayer, *reasonably expects* means the taxpayer was not liable for more than $50,000 in taxes the previous year and there is no other existing or anticipated circumstance known to the taxpayer (such as an increase in production capacity) that would cause the taxpayer's liability to increase beyond that limit.

Taxpayer. A *taxpayer* is a person who is liable for excise tax under 26 U.S.C. 7652 under the same Employer Identification Number as defined in 26 CFR 301.7701–12.

(2) *Semimonthly return period.* Except in the case of a taxpayer who qualifies for, and chooses to use, quarterly return periods as provided in paragraph (b)(3) of this section, all taxpayers must use semimonthly return periods for deferred payment of tax. The semimonthly return periods shall run from the 1st day through the 15th day of each month, and from the 16th day through the last day of each month, except as otherwise provided in paragraph (e) of this section.

(3) *Quarterly return period.* Effective January 1, 2006, a taxpayer who reasonably expects to be liable for not more than $50,000 in taxes imposed by 26 U.S.C. 7652 for the current calendar year, and who was liable for not more than $50,000 in such taxes in the preceding calendar year, may choose to use a quarterly return period. In such a case the last day for payment of tax and filing the return will be the 14th day after the last day of the calendar quarter. However, the taxpayer may not use the quarterly return period procedure for any portion of the calendar year following the first date on which the aggregate amount of tax due from the taxpayer during the calendar year exceeds $50,000, and any tax which has not been paid on that date will be due on the 14th day after the last day of semimonthly period in which that date occurs.

* * * * *

(d) *Special September rule for taxes due by semimonthly return.* (1) *General.* * * *

* * * * *

PART 70—PROCEDURE AND ADMINISTRATION

■ 21. The authority citation for part 70 continues to read as follows:

Authority: 5 U.S.C. 301 and 552; 26 U.S.C. 4181, 4182, 5146, 5203, 5207, 5275, 5367, 5415, 5504, 5555, 5684(a), 5741, 5761(b), 5802, 6020, 6021, 6064, 6102, 6155, 6159, 6201, 6203, 6204, 6301, 6303, 6311, 6313, 6314, 6321, 6323, 6325, 6326, 6331–6343, 6401–6404, 6407, 6416, 6423, 6501–6503, 6511, 6513, 6514, 6532, 6601, 6602, 6611, 6621, 6622, 6651, 6653, 6656–6658, 6665, 6671, 6672, 6701, 6723, 6801, 6862, 6863, 6901, 7011, 7101, 7102, 7121, 7122, 7207, 7209, 7214, 7304, 7401, 7403, 7406, 7423, 7424, 7425, 7426, 7429, 7430, 7432, 7502, 7503, 7505, 7506, 7513, 7601–7606, 7608–7610, 7622, 7623, 7653, 7805.

■ 22. In § 70.412, the second sentence of paragraph (a) is revised to read as follows:

§ 70.412 Excise taxes.

(a) *Collection.* * * * If the person responsible for paying the taxes has filed a proper bond to defer payment, such person may be eligible to file semimonthly or quarterly returns, with proper remittances, to cover the taxes incurred on distilled spirits, wines, and beer during the semimonthly or quarterly period. * * *

* * * * *

Signed: December 13, 2005.

John J. Manfreda,

Administrator.

Approved: December 23, 2005.

Timothy E. Skud,

Deputy Assistant Secretary (Tax, Trade, and Tariff Policy).

[FR Doc. 06–981 Filed 2–1–06; 8:45 am]

BILLING CODE 4810–31–P

DEPARTMENT OF TRANSPORTATION

Saint Lawrence Seaway Development Corporation

33 CFR Part 401

[Docket No. SLSDC 2005–23248]

RIN 2135–AA22

Seaway Regulations and Rules: Periodic Update, Various Categories

AGENCY: Saint Lawrence Seaway Development Corporation, DOT.

ACTION: Final rule.

SUMMARY: The Saint Lawrence Seaway Development Corporation (SLSDC) and the St. Lawrence Seaway Management Corporation (SLSMC) of Canada, under international agreement, jointly publish and presently administer the St. Lawrence Seaway Regulations and Rules (Practices and Procedures in Canada) in their respective jurisdictions. Under agreement with the SLSMC, the SLSDC is amending the joint regulations by updating the Seaway Regulations and Rules in various categories. The changes update the following sections of the Regulation and Rules: Condition of Vessels; Preclearance and Security for Tolls; Seaway Navigation; Toll Assessment and Payment; and Information and Reports. These amendments are necessary to take account of updated procedures and/or technology and enhance the safety of transits through the Seaway. Several of the amendments are merely editorial or for clarification of existing requirements.

DATES: This rule is effective March 6, 2006.

ADDRESSES: You may submit comments [identified by DOT DMS Docket Number SLSDC 2005-23248] by any of the following methods:

- Web Site: *http://dms.dot.gov.* Follow the instructions for submitting comments on the DOT electronic docket site.
- Fax: 1–202–493–2251.
- Mail: Docket Management Facility; U.S. Department of Transportation, 400 Seventh Street, SW., Nassif Building, Room PL–401, Washington, DC 20590–001.
- Hand Delivery: Room PL–401 on the plaza level of the Nassif Building, 400 Seventh Street, SW., Washington, DC, between 9 a.m. and 5 p.m., Monday through Friday, except Federal Holidays.
- Federal eRulemaking Portal: Go to *http://www.regulations.gov.* Follow the online instructions for submitting comments.

Instructions: All submissions must include the agency name and docket number or Regulatory Identification Number (RIN) for this rulemaking. Note that all comments received will be posted without change to *http://dms.dot.gov,* including any personal information provided. Please see the Privacy Act heading under Regulatory Notices.

Docket: For access to the docket to read background documents or comments received, go to *http://dms.dot.gov* at any time or to Room PL–401 on the plaza level of the Nassif Building, 400 Seventh Street, SW., Washington, DC, between 9 a.m. and 5 p.m., Monday through Friday, except Federal Holidays.

FOR FURTHER INFORMATION CONTACT: Craig H. Middlebrook, Acting Chief Counsel, Saint Lawrence Seaway Development Corporation, 400 Seventh Street, SW., Washington, DC 20590, (202) 366–0091.

SUPPLEMENTARY INFORMATION: The Saint Lawrence Seaway Development Corporation (SLSDC) and the St. Lawrence Seaway Management Corporation (SLSMC) of Canada, under international agreement, jointly publish and presently administer the St. Lawrence Seaway Regulations and Rules (Practices and Procedures in Canada) in their respective jurisdictions. Under agreement with the SLSMC, the SLSDC is amending the joint regulations by updating the Regulations and Rules in various categories. The changes update the following sections of the Regulations and Rules: Condition of Vessels; Preclearance and Security for Tolls; Seaway Navigation; Toll Assessment and Payment; and Information and Reports. These updates are necessary to take account of updated procedures and/or technology, which will enhance the safety of transits through the Seaway. Many of these changes are to clarify existing requirements in the regulations. Where new requirements or regulations are made, an explanation for such a change is provided below.

Regulatory Notices: Privacy Act: Anyone is able to search the electronic form of all comments received into any of our dockets by the name of the individual submitting the comment (or signing the comment, if submitted on behalf of an association, business, labor union, etc.). You may review DOT's complete Privacy Act Statement in the **Federal Register** published on April 11, 2000 (Volume 65, Number 70; Pages 19477–78) or you may visit *http://dms.dot.gov.*

The SLSDC is making two amendments to the joint regulations pertaining to the Condition of Vessels. Under sections 401.16, ''Propeller Direction Alarms'', and 401.17, ''Pitch Indicators and Alarms'', the SLSDC is adding language that would require visible and audible alarms to have a time delay of not greater than 8 seconds. In confined waters of the Seaway or while entering a lock it is important for the master/pilot to know immediately when an incorrect command is received in order to take appropriate corrective action. Currently some vessels have alarms with a 30 second delay in which time the vessel could be outside the

shipping channel or have already hit the lock bumpers.

The SLSDC is making two amendments to the joint regulations regarding the Preclearance and Security for Tolls. Under § 401.24, ''Application for Preclearance'', the SLSDC is revising the location from which a vessel can obtain a preclearance form from Cornwall, Ontario to St. Lambert, Quebec. This change reflects the fact that preclearance applications are now being processed at St. Lambert, Quebec instead of at Cornwall, Ontario.

For § 401.26, ''Security for Tolls'', the SLSDC is adding language that would allow the SLSMC manager to include charges for additional items as tie-up fees in the security for tolls.

The SLSDC is making one change to the joint regulations regarding Seaway Navigation. The amendment to § 401.30, ''Ballast Water and Trim'', reflects a change to the SLSDC/SLSMC joint Web site making it easier for Seaway users to obtain ballast water management documents. Shippers have expressed frustration regarding their difficulties in locating these documents on the Web site. The Seaway Corporations have inserted a direct link on the Seaway Web site homepage to the relevant documents.

The SLSDC is making two changes to the joint regulations regarding Toll Assessment and Payment. Under § 401.74, ''Transit Declaration'', the SLSDC is clarifying that Seaway Transit Declaration Forms can be obtained from the Seaway Web site or the SLSMC in St. Lambert, Quebec. This function was previously performed at Cornwall, Ontario.

Additionally, the amendment removes references to specific form numbers that are no longer relevant.

The SLSDC is making one amendment to the joint regulations regarding Information and Reports. Under § 401.81, the SLSDC is requiring the master of a vessel involved in an accident or dangerous occurrence to notify the nearest Seaway and Canadian or U.S. Coast Guard. This amendment is intended to clarify that the U.S. Coast Guard is the U.S. federal entity responsible for responding to vessel incidents and needs to be notified immediately when there is an accident or dangerous occurrence.

Regulatory Evaluation

This regulation involves a foreign affairs function of the United States and therefore Executive Order 12866 does not apply and evaluation under the Department of Transportation's Regulatory Policies and Procedures is not required.

Regulatory Flexibility Act Determination

I certify this regulation will not have a significant economic impact on a substantial number of small entities. The St. Lawrence Seaway Regulations and Rules primarily relate to commercial users of the Seaway, the vast majority of whom are foreign vessel operators. Therefore, any resulting costs will be borne mostly by foreign vessels.

Environmental Impact

This regulation does not require an environmental impact statement under the National Environmental Policy Act (49 U.S.C. 4321, *et seq.*) because it is not a major federal action significantly affecting the quality of the human environment.

Federalism

The Corporation has analyzed this rule under the principles and criteria in Executive Order 13132, dated August 4, 1999, and has determined that this rule does not have sufficient federalism implications to warrant a Federalism Assessment.

Unfunded Mandates

The Corporation has analyzed this rule under Title II of the Unfunded Mandates Reform Act of 1995 (Pub. L. 104–4, 109 Stat. 48) and determined that it does not impose unfunded mandates on State, local, and tribal governments and the private sector requiring a written statement of economic and regulatory alternatives.

Paperwork Reduction Act

This regulation has been analyzed under the Paperwork Reduction Act of 1995 and does not contain new or modified information collection requirements subject to the Office of Management and Budget review.

List of Subjects in 33 CFR Part 401

Hazardous materials transportation, Navigation (water), Penalties, Radio, Reporting and recordkeeping requirements, Vessels, Waterways.

■ Accordingly, the Saint Lawrence Seaway Development Corporation is amending 33 CFR Part 401, Regulations and Rules, as follows:

PART 401—SEAWAY REGULATIONS AND RULES

Subpart A—Regulations

■ 1. The authority citation for subpart A of part 401 continues to read as follows:

Authority: 33 U.S.C. 983(a) and 984(a) (4), as amended; 49 CFR 1.52, unless otherwise noted.

■ 2. In § 401.16 paragraph (b) is revised to read as follows:

§ 401.16 Propeller direction alarms.

* * * * *

(b) Visible and audible wrong-way propeller direction alarms, with a time delay of not greater than 8 seconds, located in the wheelhouse and the engineer room, unless the vessel is fitted with a device which renders it impossible to operate engines against orders from the bridge telegraph.

* * * * *

■ 3. In § 401.17 paragraph (b) is revised to read as follows:

§ 401.17 Pitch indicators and alarms.

* * * * *

(b) Effective April 1, 1984, visible and audible pitch alarms, with a time delay of not greater than 8 seconds, in the wheelhouse and engine room to indicate wrong pitch.

* * * * *

■ 4. Section 401.24 is revised to read as follows:

§ 401.24 Application for preclearance.

The representative of a vessel may, on a preclearance form (3 copies) obtained from the Manager, St. Lambert, Quebec, or downloaded from the St. Lawrence Seaway Web site at *http://www.greatlakes-seaway.com*, apply for preclearance, giving particulars of the ownership, liability insurance and physical characteristics of the vessel and guaranteeing payment of the fees that may be incurred by the vessel.

■ 5. In § 401.26 paragraph (b) is revised to read as follows:

§ 401.26 Security for Tolls.

* * * * *

(b) The security for the tolls of a vessel shall be sufficient to cover the tolls established in the ''St. Lawrence Seaway Tariff of Tolls'' for the gross registered tonnage of the vessel, cargo carried, and lockage tolls as well as security for any other charges estimated by the Manager.

* * * * *

■ 6. In § 401.30 paragraph (e) (2) is revised to read as follows:

§ 401.30 Ballast water and trim.

* * * * *

(e) * * *

(2) Every other vessel entering the Seaway that operates within the Great Lakes and the Seaway must agree to comply with the ''Voluntary Management Practices to Reduce the Transfer of Aquatic Nuisance Species Within the Great Lakes by U.S. and Canadian Domestic Shipping'' of the

Lake Carriers Association and Canadian Shipowners Association dated January 26, 2001, while operating anywhere within the Great Lakes and the Seaway. For copies of the ''Code of Best Practices for Ballast Water Management'' and of the ''Voluntary Management Practices to Reduce the Transfer of Aquatic Nuisance Species Within the Great Lakes by U.S. and Canadian Domestic Shipping'' refer to the St. Lawrence Seaway Web site at *http://www.greatlakes-seaway.com.*

■ 7. In § 401.74 paragraphs (a) and (g) are revised to read as follows:

§ 401.74 Transit declaration.

(a) Seaway Transit Declaration Form (Cargo and Passenger) shall be forwarded to the Manager by the representative of a ship, for each ship that has an approved preclearance except non-cargo ships, within fourteen days after the vessel enters the Seaway on any upbound or downbound transit. The form may be obtained from the St. Lawrence Seaway Management Corporation, 151 Ecluse Street, St. Lambert, Quebec, J4R 2V6 or from the St. Lawrence Seaway Web site at *http://www.greatlakes-seaway.com.*

* * * * *

(g) Where government aid cargo is declared, appropriate Canadian or U.S. customs form or a stamped and signed certification letter from the U.S. or Canada Customs must accompany the transit declaration form.

* * * * *

■ 8. In § 401.81 paragraph (a) is revised to read as follows:

§ 401.81 Reporting an accident.

(a) Where a vessel on the Seaway is involved in an accident or a dangerous occurrence, the master of the vessel shall report the accident or occurrence, pursuant to the requirements of the Transportation Safety Board Regulations, to the nearest Seaway and Canadian or U.S. Coast Guard radio or traffic stations, as soon as possible and prior to departing the Seaway system.

* * * * *

Issued at Washington, DC on January 23, 2006.

Saint Lawrence Seaway Development Corporation.

Albert S. Jacquez,

Administrator.

[FR Doc. 06–941 Filed 2–1–06; 8:45 am]

BILLING CODE 4910–61–P

ENVIRONMENTAL PROTECTION AGENCY

40 CFR Part 52

[MD200–3116; FRL–8021–7]

Approval and Promulgation of Air Quality Implementation Plans; Maryland; Update to Materials Incorporated by Reference

AGENCY: Environmental Protection Agency (EPA).

ACTION: Final rule; Notice of administrative change.

SUMMARY: EPA is updating the materials submitted by Maryland that are incorporated by reference (IBR) into the State implementation plan (SIP). The regulations affected by this update have been previously submitted by the State agency, the Maryland Department of the Environment, and approved by EPA. This update affects the SIP materials that are available for public inspection at the National Archives and Records Administration (NARA), the Air and Radiation Docket and Information Center located at EPA Headquarters in Washington, DC and the Regional Office.

EFFECTIVE DATE: This action is effective February 2, 2006.

ADDRESSES: SIP materials which are incorporated by reference into 40 CFR part 52 are available for inspection at the following locations: Air Protection Division, U.S. Environmental Protection Agency, Region III, 1650 Arch Street, Philadelphia, Pennsylvania 19103; the Air and Radiation Docket and Information Center, U.S. Environmental Protection Agency, 1301 Constitution Avenue NW., Room B108, Washington, DC 20460; or the National Archives and Records Administration (NARA). For information on the availability of this material at NARA, call 202–741–6030, or go to: *http://www.archives.gov/federal_register/code_of_federal_regulations/ibr_locations.html.*

FOR FURTHER INFORMATION CONTACT: Harold A. Frankford, (215) 814–2108 or by e-mail at *frankford.harold@epa.gov.*

SUPPLEMENTARY INFORMATION: The SIP is a living document which the State can revise as necessary to address the unique air pollution problems. Therefore, EPA from time to time must take action on SIP revisions containing new and/or revised regulations as being part of the SIP. On May 22, 1997 (62 FR 27968), EPA revised the procedures for incorporating by reference Federally-approved SIPs, as a result of consultations between EPA and the Office of the Federal Register (OFR). The description of the revised SIP document, IBR procedures and ''Identification of plan'' format are discussed in further detail in the May 22, 1997 **Federal Register** document. On November 29, 2004 (69 FR 69304), EPA published a **Federal Register** beginning the new IBR procedure for Maryland. In this document, EPA is doing the following:

1. Announcing the update to the IBR material as of December 15, 2005.

2. Making corrections to entries listed in the paragraph 52.1070(c) chart, as described below:

a. COMAR 26.11.04—The chapter title is revised.

b. COMAR 26.11.09—The text for COMAR 26.11.09.01, 26.11.09.03, 26.11.09.06 and 26.11.09.08 in the ''Additional explanation/citation at 40 CFR 52.1100'' column is revised.

c. COMAR 26.11.17—The text for COMAR 26.11.17.01 and 26.11.17.03 in the ''Additional explanation/citation at 40 CFR 52.1100'' column is revised.

d. COMAR 26.11.19—The text for COMAR 26.11.19.17 in the ''Additional explanation/citation at 40 CFR 52.1100'' column is removed.

e. COMAR 26.11.25—The abbreviation ''COMAR'' in the ''Code of Maryland administrative regulations (COMAR) citation'' column is removed; the regulation titles for COMAR 26.11.25.03 and 26.11.25.04 in the ''Title/subject'' column are revised.

f. COMAR 11.14.08.22—The regulation title in the ''Title/subject'' column is revised.

g. COMAR 03.03.06.05—The regulation title in the ''Title/subject'' column is revised.

EPA has determined that today's rule falls under the ''good cause'' exemption in section 553(b)(3)(B) of the Administrative Procedures Act (APA) which, upon finding ''good cause,'' authorizes agencies to dispense with public participation, and section 553(d)(3) which allows an agency to make a rule effective immediately (thereby avoiding the 30-day delayed effective date otherwise provided for in the APA). Today's rule simply codifies provisions which are already in effect as a matter of law in Federal and approved State programs. Under section 553 of the APA, an agency may find good cause where procedures are ''impractical, unnecessary, or contrary to the public interest.'' Public comment is ''unnecessary'' and ''contrary to the public interest'' since the codification only reflects existing law. Immediate notice in the CFR benefits the public by removing outdated citations and incorrect chart entries.

Statutory and Executive Order Reviews

A. General Requirements

Under Executive Order 12866 (58 FR 51735, October 4, 1993), this action is not a ''significant regulatory action'' and therefore is not subject to review by the Office of Management and Budget. For this reason, this action is also not subject to Executive Order 13211, ''Actions Concerning Regulations That Significantly Affect Energy Supply, Distribution, or Use'' (66 FR 28355, May 22, 2001). This action merely approves state law as meeting Federal requirements and imposes no additional requirements beyond those imposed by state law. Accordingly, the Administrator certifies that this rule will not have a significant economic impact on a substantial number of small entities under the Regulatory Flexibility Act (5 U.S.C. 601 *et seq.*). Because this rule approves pre-existing requirements under state law and does not impose any additional enforceable duty beyond that required by state law, it does not contain any unfunded mandate or significantly or uniquely affect small governments, as described in the Unfunded Mandates Reform Act of 1995 (Pub. L. 104–4). This rule also does not have tribal implications because it will not have a substantial direct effect on one or more Indian tribes, on the relationship between the Federal Government and Indian tribes, or on the distribution of power and responsibilities between the Federal Government and Indian tribes, as specified by Executive Order 13175 (65 FR 67249, November 9, 2000). This action also does not have Federalism implications because it does not have substantial direct effects on the States, on the relationship between the national government and the States, or on the distribution of power and responsibilities among the various levels of government, as specified in Executive Order 13132 (64 FR 43255, August 10, 1999). This action merely approves a state rule implementing a Federal standard, and does not alter the relationship or the distribution of power and responsibilities established in the Clean Air Act. This rule also is not subject to Executive Order 13045 ''Protection of Children from Environmental Health Risks and Safety Risks'' (62 FR 19885, April 23, 1997), because it is not economically significant. In reviewing SIP submissions, EPA's role is to approve state choices, provided that they meet the criteria of the Clean Air Act. In this context, in the absence of a prior existing requirement for the State to use voluntary consensus standards (VCS), EPA has no authority to disapprove a SIP submission for failure to use VCS. It would thus be inconsistent with applicable law for EPA, when it reviews a SIP submission, to use VCS in place of a SIP submission that otherwise satisfies the provisions of the Clean Air Act. Thus, the requirements of section 12(d) of the National Technology Transfer and Advancement Act of 1995 (15 U.S.C. 272 note) do not apply. This rule does not impose an information collection burden under the provisions of the Paperwork Reduction Act of 99 (44 U.S.C. 3501 *et seq.*).

B. Submission to Congress and the Comptroller General

The Congressional Review Act, 5 U.S.C. 801 *et seq.*, as added by the Small Business Regulatory Enforcement Fairness Act of 1996, generally provides that before a rule may take effect, the agency promulgating the rule must submit a rule report, which includes a copy of the rule, to each House of the Congress and to the Comptroller General of the United States. EPA will submit a report containing this rule and other required information to the U.S. Senate, the U.S. House of Representatives, and the Comptroller General of the United States prior to publication of the rule in the **Federal Register**. This rule is not a ''major rule'' as defined by 5 U.S.C. 804(2).

C. Petitions for Judicial Review

EPA has also determined that the provisions of section 307(b)(1) of the Clean Air Act pertaining to petitions for judicial review are not applicable to this action. Prior EPA rulemaking actions for each individual component of the Maryland SIP compilations had previously afforded interested parties the opportunity to file a petition for judicial review in the United States Court of Appeals for the appropriate circuit within 60 days of such rulemaking action. Thus, EPA sees no need in this action to reopen the 60-day period for filing such petitions for judicial review for this ''Identification of plan'' reorganization update action for Maryland.

List of Subjects in 40 CFR Part 52

Environmental protection, Air pollution control, Carbon monoxide, Incorporation by reference, Intergovernmental relations, Lead, Nitrogen dioxide, Ozone, Particulate matter, Reporting and recordkeeping requirements, Sulfur oxides, Volatile organic compounds.

Dated: January 9, 2006.

Donald S. Welsh,

Regional Administrator, Region III.

■ 40 CFR part 52 is amended as follows:

PART 52—[AMENDED]

■ 1. The authority for citation for part 52 continues to read as follows:

Authority: 42. U.S.C. 7401 *et seq.*

Subpart V—Maryland

■ 2. Section 52.1070 is amended by revising paragraphs (b) and (c) to read as follows:

§ 52.1070 Identification of plan.

* * * * *

(b) *Incorporation by reference.* (1) Material listed as incorporated by reference in paragraphs (c) and (d) was approved for incorporation by reference by the Director of the Federal Register in accordance with 5 U.S.C. 552(a) and 1 CFR part 51. Material incorporated as it exists on the date of the approval, and notice of any change in the material will be published in the **Federal Register**. Entries in paragraphs (c) and (d) of this section with EPA approval dates on or after December 15, 2005, will be incorporated by reference in the next update to the SIP compilation.

(2) EPA Region III certifies that the rules/regulations provided by EPA at the addresses in paragraph (b)(3) of this section are an exact duplicate of the officially promulgated State rules/regulations which have been approved as part of the State implementation plan as of December 15, 2005.

(3) Copies of the materials incorporated by reference may be inspected at the EPA Region III Office at 1650 Arch Street, Philadelphia, PA 19103; the EPA, Air and Radiation Docket and Information Center, Air Docket (6102), 1301 Constitution Avenue, NW., Room B108, Washington, DC 20460; or at the National Archives and Records Administration (NARA). For information on the availability of this material at NARA, call 202–741–6030, or go to: *http://www.archives.gov/federal_register/code_of_federal_regulations/ibr_locations.html.*

(c) *EPA approved regulations.*

EPA-APPROVED REGULATIONS IN THE MARYLAND SIP

Code of Maryland administrative regulations (COMAR) citation	Title/subject	State effective date	EPA approval date	Additional explanation/citation at 40 CFR 52.1100
26.11.01 General Administrative Provisions				
26.11.01.01A., .01B *Exceptions:* .01B(3), (13), (21) through (23), (25).	Definitions	10/10/01	5/28/02, 67 FR 36810.	(c)(171); Additional EPA approvals are codified at §§ 52.1100(c)(119) (c)(122), (c)(143), (c)(148), (c)(158), (c)(159), and (c)(164).
26.11.01.01B(53)	Definitions—definition of volatile organic compound (VOC).	11/24/03	3/30/05, 70 FR 16122.	Definition reflects the version of 40 CFR 51.100(s) in effect as of 12/31/2002.
26.11.01.02	Relationship of Provisions in this Subtitle.	8/1/88	11/3/92, 57 FR 49651.	(c)(90)(i)(B)(*1*).
26.11.01.03	Delineation of Areas	8/1/88	11/3/92, 57 FR 49651.	(c)(90)(i)(B)(*1*).
26.11.01.04	Testing and Monitoring	2/17/92	9/7/01, 66 FR 46727.	(c)(153).
26.11.01.05	Records and Information	6/30/97 12/10/01	5/28/02, 67 FR 36810.	(c)(172).
26.11.01.05–1	Emission Statements	12/7/92	10/12/94, 59 FR 51517.	(c)(109).
26.11.01.06	Circumvention	8/1/88	11/3/92, 57 FR 49651.	(c)(90)(i)(B)(*1*).
26.11.01.07	Malfunctions and Other Temporary Increases in Emissions.	8/1/88	11/3/92, 57 FR 49651.	(c)(90)(i)(B)(*1*).
26.11.01.08	Determination of Ground Level Concentrations—Acceptable Techniques.	8/1/88	11/3/92, 57 FR 49651.	(c)(90)(i)(B)(*5*).
26.11.01.09	Vapor Pressure of Gasoline	8/1/88	11/3/92, 57 FR 49651.	(c)(90)(i)(B)(*5*).
26.11.01.10	Continuous Emission Monitoring (CEM) Requirements.	7/22/91	2/28/96, 61 FR 7418.	(c)(106);TM90–01 was approved as ''additional material'', but not IBR'd.
26.11.02 Permits, Approvals, and Registration				
26.11.02.01	Definitions	5/8/95	2/27/03, 68 FR 9012.	(c)(182); Exceptions: 26.11.02.01B(1), (1–1), (4)–(6), (10), (15), (16), (22), (29)–(33), (37), (39), (42), (46), (49), (50), (54).
26.11.02.02	General Provisions	5/8/95	2/27/03, 68 FR 9012.	(c)(182); Exception: .02D.
26.11.02.03	Federally Enforceable Permits to Construct and State Permits to Operate.	5/8/95	2/27/03 68 FR 9012	(c)(182).
26.11.02.04	Duration of Permits	5/8/95	2/27/03, 68 FR 9012.	(c)(182); Exception: .04C(2).
26.11.02.05	Violation of Permits and Approvals	5/8/95	2/27/03, 68 FR 9012.	(c)(182).
26.11.02.06	Denial of Applications for State Permits and Approvals.	5/8/95 6/16/97	2/27/03, 68 FR 9012.	(c)(182).
26.11.02.07	Procedures for Denying, Revoking, or Reopening and Revising a Permit or Approval.	5/8/95	2/27/03, 68 FR 9012.	(c)(182).
26.11.02.08	Late Applications and Delays in Acting on Applications.	5/8/95	2/27/03, 68 FR 9012.	(c)(182).
26.11.02.09	Sources Subject to Permits to Construct and Approvals.	5/8/95 5/4/98	2/27/03, 68 FR 9012.	(c)(182).
26.11.02.10	Sources Exempt from Permits to Construct and Approvals.	5/8/95, 6/16/97 9/22/97 3/22/99	2/27/03, 68 FR 9012.	(c)(182).
26.11.02.11	Procedures for Obtaining Permits to Construct Certain Significant Sources.	5/8/95 6/16/97	2/27/03, 68 FR 9012.	(c)(182); Exception: .11C.
26.11.02.12	Procedures for Obtaining Approvals of PSD Sources and NSR Sources, Permits to Construct, Permits to Construct MACT Determinations on a Case-by-Case Basis in Accordance with 40 CFR Part 63, Subpart B, and Certain 100-Ton Sources.	5/8/95	2/27/03, 68 FR 9012.	(c)(182).
26.11.02.13	Sources subject to State Permits to Operate.	5/8/95	2/27/03, 68 FR 9012.	(c)(182).

EPA-APPROVED REGULATIONS IN THE MARYLAND SIP—Continued

Code of Maryland administrative regulations (COMAR) citation	Title/subject	State effective date	EPA approval date	Additional explanation/citation at 40 CFR 52.1100
26.11.02.14	Procedures for Obtaining State Permits to Operate and Permits to Construct Certain Sources and Permits to Construct Control Equipment on Existing Sources.	5/8/95 6/16/97	2/27/03, 68 FR 9012.	(c)(182).
26.11.04 Ambient Air Quality Standards				
26.11.04.02	State-Adopted National Ambient Air Quality Standards.	5/8/95	8/20/01, 66 FR 43485.	(c)(165).
26.11.04.03	Definitions, Reference Conditions, and Methods of Measurement.	2/21/89	2/24/94, 59 FR 8865.	(c)(99).
26.11.04.04	Particulate Matter	2/21/89	2/24/94, 59 FR 8865.	(c)(99).
26.11.04.05	Sulfur Oxides	8/1/88	11/3/92, 57 FR 49651.	(c)(90)(i)(B)(*3*).
26.11.04.06	Carbon Monoxide	[1]1/5/88	4/7/93, 58 FR 18010.	(c)(92).
26.11.04.07	Ozone	8/1/88	11/3/92, 57 FR 49651.	(c)(90)(i)(B)(*3*).
26.11.04.08	Nitrogen Dioxide	8/1/88	11/3/92, 57 FR 49651.	(c)(90)(i)(B)(*3*).
26.11.04.09	Lead	8/1/88	11/3/92, 57 FR 49651.	(c)(90)(i)(B)(*3*).
26.11.05 Air Quality Episode System				
26.11.05.01	Definitions	6/18/90	4/14/94, 59 FR 17698.	(c)(100).
26.11.05.02	General Requirements	6/18/90	4/14/94, 59 FR 17698.	(c)(100).
26.11.05.03	Air Pollution Episode Criteria	6/18/90	4/14/94, 59 FR 17698.	(c)(100).
26.11.05.04	Standby Emissions Reduction Plan	8/1/88	11/3/92, 57 FR 49651.	(c)(90)(i)(B)(*4*).
26.11.05.05	Control Requirements and Standby Orders.	6/18/90	4/14/94, 59 FR 17698.	(c)(100).
26.11.05.06	Tables	8/1/88	11/3/92, 57 FR 49651.	(c)(90)(i)(B)(*4*).
26.11.06 General Emissions Standards, Prohibitions, and Restrictions				
26.11.06.01	Definitions	5/8/91	11/29/94, 59 FR 60908.	(c)(102)(i)(B)(*14*).
26.11.06.02 [*Except:* .02A(1)(e), (1)(g), (1)(h), (1)(i)]	Visible Emissions	11/11/02	8/6/03, 68 FR 46487.	(c)(181).
26.11.06.03	Particulate Matter	11/11/02	8/6/03, 68 FR 46487.	(c)(181).
26.11.06.04	Carbon Monoxide in Areas III and IV	[1]1/5/88	4/7/93, 58 FR 18010.	(c)(92).
26.11.06.05	Sulfur Compounds from Other than Fuel Burning Equipment.	11/11/02	8/6/03, 68 FR 46487.	(c)(181).
26.11.06.06	Volatile Organic Compounds	9/22/97	5/7/01, 66 FR 22924.	(c)(156); **Note:** On 2/27/03 (68 FR 9012), EPA approved a revised rule citation with a State effective date of 5/8/95 [(c)(182)(i)(C)].
26.11.06.10	Refuse Burning Prohibited in Certain Installations.	8/1/88	11/3/92, 57 FR 49651.	(c)(90)(i)(B)(*5*).
26.11.06.14	Control of PSD sources	10/10/01	5/28/02, 67 FR 36810.	(c)(171).
26.11.06.15	Nitrogen Oxides from Nitric Acid Plants	8/1/88	11/3/92, 57 FR 49651.	(c)(90)(i)(B)(*5*).
26.11.06.16	Tables	8/1/88	11/3/92, 57 FR 49651.	(c)(90)(i)(B)(*5*).

EPA-APPROVED REGULATIONS IN THE MARYLAND SIP—Continued

Code of Maryland administrative regulations (COMAR) citation	Title/subject	State effective date	EPA approval date	Additional explanation/citation at 40 CFR 52.1100
26.11.07 Open Fires				
26.11.07.01	Definitions	5/22/95	6/11/02, 67 FR 39856.	(c)(173).
26.11.07.02	General	5/22/95	2/25/97, 62 FR 8380.	(c)(120).
26.11.07.03	Control Officer May Authorize Certain Open Fires.	8/11/97	6/11/02, 67 FR 39856.	(c)(173).
26.11.07.04	Public Officers May Authorize Certain Fires.	5/22/95	2/25/97, 62 FR 8380.	(c)(120).
26.11.07.05	Open Fires Allowed Without Authorization of Control Officer or Public Officer.	5/22/95	2/25/97, 62 FR 8380.	(c)(120) .05A(3) & (4), and .05B(3) are State-enforceable only.
26.11.07.06	Safety Determinations at Federal Facilities.	8/11/97	6/11/02, 67 FR 39856.	(c)(173).
10.18.08 Control of Incinerators				
10.18.08.01	Definitions	3/25/84	7/2/85, 50 FR 27245.	(c)(82).
10.18.08.02	Applicability	7/18/80	8/5/81, 46 FR 39818.	(c)(45).
10.18.08.03	Prohibition of Certain Incinerators in Areas III and IV.	6/8/81	5/11/82, 47 FR 20126.	(c)(58).
10.18.08.04	Visible Emissions	3/25/84	7/2/85, 50 FR 27245.	(c)(82).
10.18.08.05	Particulate Matter	3/25/84	7/2/85, 50 FR 27245.	(c)(82).
10.18.08.06	Prohibition of Unapproved Hazardous Waste Incinerators.	3/25/84	7/2/85, 50 FR 27245.	(c)(82).
26.11.09 Control of Fuel Burning Equipment and Stationary Internal Combustion Engines, and Certain Fuel-Burning Installations				
26.11.09.01	Definitions	6/21/04	7/6/05, 70 FR 38774.	Revised definition of "fuel" in 26.11.09.01B(2–1)(a).
26.11.09.02	Applicability	8/1/88	11/3/92, 57 FR 49651.	(c)(90)(i)(B)(*7*).
26.11.09.03	General Conditions for Fuel Burning Equipment.	6/21/04	7/6/05, 70 FR 38774.	Revised paragraphs 26.11.09.03C(1) and .03C(2).
26.11.09.04	Prohibition of Certain New Fuel Burning Equipment.	8/1/88	11/3/92, 57 FR 49651.	(c)(90)(i)(B)(*7*).
26.11.09.05	Visible Emissions	11/11/02	5/1/03, 68 FR 23206.	(c)(183).
26.11.09.06	Control of Particulate Matter	6/21/04	7/6/05, 70 FR 38774.	Addition of paragraph 26.11.09.06C.
26.11.09.07	Control of Sulfur Oxides from Fuel Burning Equipment.	8/1/88	11/3/92, 57 FR 49651.	(c)(90)(i)(B)(*7*).
26.11.09.08	Control of NO_X Emissions for Major Stationary Sources.	11/24/03	9/20/04, 69 FR 56170.	(c)(191).
26.11.09.09	Tables and Diagrams	11/11/02	5/1/03, 68 FR 23206.	(c)(183); Revised Table 1.
26.11.10 Control of Iron and Steel Production Installations				
26.11.10.01	Definitions	12/25/00	11/7/01, 66 FR 56222.	(c)(163).
26.11.10.02	Applicability	11/2/98	9/7/01, 66 FR 46727.	(c)(153).
26.11.10.03	Visible Emissions	11/2/98	9/7/01, 66 FR 46727.	(c)(153).
26.11.10.04	Control of Particulate Matter	11/2/98	9/7/01, 66 FR 46727.	(c)(153).
26.11.10.05	Sulfur Content Limitations for Coke Oven Gas.	11/2/98	9/7/01, 66 FR 46727.	(c)(153).
26.11.10.06[1]	Control of Volatile Organic Compounds from Iron and Steel Production Installations.	12/25/00	11/7/01, 66 FR 56222.	(c)(163).
26.11.10.06[2]	Carbon Monoxide	8/1/88	11/3/92, 57 FR 49651.	(c)(90)(i)(B)(*8*).

EPA-APPROVED REGULATIONS IN THE MARYLAND SIP—Continued

Code of Maryland administrative regulations (COMAR) citation	Title/subject	State effective date	EPA approval date	Additional explanation/citation at 40 CFR 52.1100
26.11.10.07	Testing and Observation Procedures	12/25/00	11/7/01, 66 FR 56222.	(c)(163).
26.11.11 Control of Petroleum Products Installations, Including Asphalt Paving, Asphalt Concrete Plants, and Use of Waste Oils				
26.11.11.01	Applicability	8/1/88	11/3/92, 57 FR 49651.	(c)(90)(i)(B)(*9*).
26.11.11.02	Asphalt Paving	4/26/93	1/6/95, 60 FR 2018	(c)(113)(i)(B)(*1*).
26.11.11.03	Asphalt Concrete Plants in Areas I, II, V, and VI.	8/1/88	11/3/92, 57 FR 49651.	(c)(90)(i)(B)(*9*).
26.11.11.06	Use of Waste Oils as Fuel	8/1/88	11/3/92, 57 FR 49651.	(c)(90)(i)(B)(*9*).
26.11.12 Control of Batch Type Hot-Dip Galvanizing Installations				
26.11.12.01	Definitions	5/8/95	7/25/00, 64 FR 45743.	(c)(149).
26.11.12.02	Applicability	5/8/95	7/25/00, 64 FR 45743.	(c)(149).
26.11.12.03	Prohibitions and Exemptions	5/8/95	7/25/00, 64 FR 45743.	(c)(149).
26.11.12.04	Visible Emissions	8/1/88	11/3/92, 57 FR 49651.	(c)(90)(i)(B)(*10*).
26.11.12.05	Particulate Matter	8/1/88	11/3/92, 57 FR 49651.	(c)(90)(i)(B)(*10*).
26.11.12.06	Reporting Requirements	8/1/88	11/3/92, 57 FR 49651.	(c)(90)(i)(B)(*10*).
26.11.13 Control of Gasoline and Other Volatile Organic Compound Storage and Handling				
26.11.13.01	Definitions	8/11/97	12/22/98, 63 FR 70667.	(c)(130).
26.11.13.02	Applicability and Exemption	4/26/93	1/6/95, 60 FR 2018	(c)(113)(i)(B)(*3*).
26.11.13.03	Large Storage Tanks	8/1/88	11/3/92, 57 FR 49651.	(c)(90)(i)(B)(*12*).
26.11.13.04	Loading Operations	8/11/97	12/22/98, 63 FR 70667.	(c)(132).
26.11.13.05	Gasoline Leaks from Tank Trucks	2/15/93	1/6/95, 60 FR 2018	(c)(112).
26.11.13.06	Plans for Compliance	4/26/93	1/6/95, 60 FR 2018	(c)(113)(i)(B)(*5*).
26.11.13.07	Control of VOC Emissions from Portable Fuel Containers.	1/21/02	6/29/04, 69 FR 38848.	(c)(184).
26.11.14 Control of Emissions From Kraft Pulp Mills				
26.11.14.01	Definitions	1/8/01 10/15/01	11/7/01, 66 FR 56220.	(c)(170).
26.11.14.02	Applicability	1/8/01	11/7/01, 66 FR 56220.	(c)(170).
26.11.14.06	Control of Volatile Organic Compounds	1/8/01 10/15/01	11/7/01, 66 FR 56220.	(c)(170).
26.11.17 Requirements for Major New Sources and Modifications				
26.11.17.01	Definitions	11/24/03	9/20/04, 69 FR 56170.	52.1070(c)(191).
26.11.17.02	Applicability	4/26/93 10/2/00	2/12/01, 66 FR 9766.	52.1070(c)(148).
26.11.17.03	General Conditions	4/26/93 10/2/00	2/12/01, 66 FR 9766.	52.1070(c)(191).
26.11.17.04	Baseline for Determining Credit for Emission and Air Quality Offsets.	4/26/93 10/2/00	2/12/01, 66 FR 9766.	52.1070(c)(148).
26.11.17.05	Administrative Procedures	4/26/93 10/2/00	2/12/01, 66 FR 9766.	52.1070(c)(148).

EPA-APPROVED REGULATIONS IN THE MARYLAND SIP—Continued

Code of Maryland administrative regulations (COMAR) citation	Title/subject	State effective date	EPA approval date	Additional explanation/citation at 40 CFR 52.1100
26.11.19 Volatile Organic Compounds From Specific Processes				
26.11.19.01	Definitions	6/5/95	9/2/97, 62 FR 46199.	(c)(126); **Note:** On 5/13/1998 (63 FR 26462), EPA approved the revised definition of "major stationary source of VOC" with a State effective date of 5/8/1995 [(c)(128)].
26.11.19.02	Applicability, Determining Compliance, Reporting, and General Requirements.	5/4/98 12/10/01	2/3/03, 68 FR 5228	(c)(174), (c)(175) 1. Limited approval of paragraph .02G (9/4/98, 63 FR 47174) [(c)(131)–(c)(133)] 2. On 2/27/03 (68 FR 9012), EPA approved a revised rule citation with a State effective date of 5/8/95 [(c)(182)(i)(D)].
26.11.19.03	Automotive and Light-Duty Truck Coating.	9/22/97	11/5/98, 63 FR 59720.	(c)(140).
26.11.19.04	Can Coating	8/1/88	11/3/92, 57 FR 49651.	(C)(90)(i)(B)(*12*).
26.11.19.05	Coil Coating	8/1/88	11/3/92, 57 FR 49651.	(C)(90)(i)(B)(*12*).
26.11.19.06	Large Appliance Coating	8/1/88	11/3/92, 57 FR 49651.	(C)(90)(i)(B)(*12*).
26.11.19.07	Paper, Fabric, Vinyl and Other Plastic Parts Coating.	8/24/98	1/14/2000, 64 FR 2334.	(c)(147).
26.11.19.07–1	Control of VOC Emissions from solid Resin Decorative Surface Manufacturing.	6/15/98	6/17/99, 64 FR 32415.	(c)(142).
26.11.19.08	Metal Furniture Coating	8/1/88	11/3/92, 57 FR 49651.	(C)(90)(i)(B)(*12*).
26.11.19.09	Control of Volatile Organic Compounds (VOC) Emissions from cold and Vapor Degreasing.	6/5/95	8/4/97, 62 FR 41853.	(c)(123).
26.11.19.10	Flexographic and Rotogravure Printing	6/5/95	9/2/97, 62 FR 46199.	(c)(126).
26.11.19.11	Control of Volatile Organic Compounds (VOC) Emissions from Sheet-Fed and Web Lithographic Printing.	6/5/95	9/2/97, 62 FR 46199.	(c)(126).
26.11.19.12	Dry Cleaning Installations	9/22/97	9/2/98, 63 FR 46662.	(c)(131).
26.11.19.13	Miscellaneous Metal Coating	5/8/91	11/29/94, 59 FR 60908.	(c)(102)(i)(B)(*6*).
26.11.19.13–1	Aerospace Coating Operations	10/2/00 10/15/01	11/7/01, 66 FR 56220.	(c)(169).
26.11.19.13–2	Control of VOC Emissions from Brake Shoe Coating Operations.	8/24/98	6/17/99, 64 FR 32415.	(c)(142).
26.11.19.13–3	Control of VOC Emissions from Structural Steel Coating Operations.	6/29/98	6/17/99, 64 FR 32415.	(c)(142).
26.11.19.14	Manufacture of Synthesized Pharmaceutical Products.	5/8/91	11/29/94, 59 FR 60908.	(c)(102)(i)(B)(*14*).
26.11.19.15	Paint, Resin, and Adhesive Manufacturing and Adhesive Application.	5/4/98 3/22/99	10/28/99, 64 FR 57989.	(c)(145).
26.11.19.16	Control of VOC Equipment Leaks	8/19/91	9/7/94, 59 FR 46180.	(c)(103)(i)(B)(*9*).
26.11.19.17	Control of Volatile Organic Compounds (VOC) Emissions from Yeast Manufacturing.	6/21/04	10/27/04, 69 FR 62589.	
26.11.19.18	Control of Volatile Organic Compounds (VOC) Emissions from Screen Printing and Digital Imaging.	6/10/02	1/15/03, 68 FR 1972.	(c)(177).
26.11.19.19	Control of Volatile Organic Compounds (VOC) Emissions from Expandable Polystyrene Operations.	10/2/00	5/7/01, 66 FR 22924.	(c)(156).
26.11.19.21	Control of Volatile Organic Compounds (VOC) Emissions from Commercial Bakery Ovens.	7/3/95	10/15/97, 62 FR 53544.	(c)(125)(i)(B)(*4*).
26.11.19.22	Control of Volatile Organic Compounds (VOC) Emissions from Vinegar Generators.	8/11/97	9/23/99, 64 FR 41445.	(c)(137).

EPA-APPROVED REGULATIONS IN THE MARYLAND SIP—Continued

Code of Maryland administrative regulations (COMAR) citation	Title/subject	State effective date	EPA approval date	Additional explanation/citation at 40 CFR 52.1100
26.11.19.23	Control of Volatile Organic Compounds (VOC) Emissions from Vehicle Refinishing.	5/22/95	8/4/97, 62 FR 41853.	(c)(124).
26.11.19.24	Control of Volatile Organic Compounds (VOC) Emissions from Leather Coating Operations.	8/11/97	9/23/99, 64 FR 41445.	(c)(137).
26.11.19.25	Control of Volatile Organic Compounds from Explosives and Propellant Manufacturing.	8/11/97	1/26/99, 64 FR 3852.	(c)(141).
26.11.19.26	Control of Volatile Organic Compound Emissions from Reinforced Plastic Manufacturing.	8/11/97	8/19/99, 64 FR 45182.	(c)(139).
26.11.19.27	Control of Volatile Organic Compounds from Marine Vessel Coating Operations.	10/20/97	9/5/01, 66 FR 46379.	(c)(166).
26.11.19.28	Control of Volatile Organic Compounds from Bread and Snack Food Drying Operations.	10/2/00	5/7/01, 66 FR 22924.	(c)(157).
26.11.19.29	Control of Volatile Organic Compounds from Distilled Spirits Facilities.	10/2/00 10/15/01	11/7/01, 66 FR 56220.	(c)(160).
26.11.19.30	Control of Volatile Organic Compounds from Organic Chemical Production and Polytetrafluoroethylene Installations.	12/10/01 11/11/02	6/3/03, 68 FR 33000.	(c)(176).
26.11.20 Mobile Sources				
26.11.20.02	Motor Vehicle Emission Control Devices	8/1/88	11/3/92, 57 FR 49651.	(c)(90)(i)(B)(*13*), [as 26.11.20.06].
26.11.20.03	Motor Vehicle Fuel Specifications	10/26/92	6/10/94, 59 FR 29957.	(c)(101)(i)(B)(*3*).
26.11.20.04	National Low Emission Vehicle Program	3/22/99	12/28/99, 64 FR 72564.	(c)(146).
26.11.24 Stage II Vapor Recovery at Gasoline Dispensing Facilities				
26.11.24.01	Definitions	4/15/02	5/7/03, 68 FR 24363.	(c)(178).
26.11.24.01–1	Incorporation by Reference	4/15/02	5/7/03, 68 FR 24363.	(c)(178).
26.11.24.02	Applicability, Exemptions, and Effective Date.	4/15/02	5/7/03, 68 FR 24363.	(c)(178).
26.11.24.03	General Requirements	4/15/02	5/7/03, 68 FR 24363.	(c)(178).
26.11.24.04	Testing Requirements	4/15/02	5/7/03, 68 FR 24363.	(c)(178).
26.11.24.05	Inspection Requirements	2/15/93	6/9/94, 59 FR 29730.	(c)(107).
26.11.24.06	Training Requirements for Operation and Maintenance of Approved Systems.	2/15/93	6/9/94, 59 FR 29730.	(c)(107).
26.11.24.07	Recordkeeping and Reporting Requirements.	4/15/02	5/7/03, 68 FR 24363.	(c)(178).
26.11.24.08	Instructional Signs	2/15/93	6/9/94, 59 FR 29730.	(c)(107).
26.11.24.09	Sanctions	2/15/93	6/9/94, 59 FR 29730.	(c)(107).
26.11.25 Control of Glass Melting Furnaces				
26.11.25.01	Definitions	10/5/98	10/19/05, 70 FR 60738.	
26.11.25.02	Applicability and Exemptions	10/5/98	10/19/05, 70 FR 60738.	
26.11.25.03	Visible Emissions from Glass Melting Furnaces.	10/5/98	10/19/05, 70 FR 60738.	
26.11.25.04	Particulate Matter Emissions from Glass Melting Furnaces.	10/5/98	10/19/05, 70 FR 60738.	

EPA-APPROVED REGULATIONS IN THE MARYLAND SIP—Continued

Code of Maryland administrative regulations (COMAR) citation	Title/subject	State effective date	EPA approval date	Additional explanation/citation at 40 CFR 52.1100
26.11.26 Conformity				
26.11.26.01	Definitions	5/15/95 6/5/95	12/9/98, 63 FR 67782.	(c)(136); definitions of Applicable implementation plan, Governor, State, and State air agency.
26.11.26.03	General Conformity	5/15/95 6/5/95	12/9/98, 63 FR 67782.	(c)(136); current COMAR citation is 26.11.26.04.
26.11.29 NO_X Reduction and Trading Program				
26.11.29.01	Definitions	5/1/00	1/10/01, 66 FR 1866.	(c)(154)(i)(B)(*1*).
26.11.29.02	Incorporation by Reference	5/1/00	1/10/01, 66 FR 1866.	(c)(154)(i)(B)(*1*).
26.11.29.03	Scope and Applicability	5/1/00	1/10/01, 66 FR 1866.	(c)(154)(i)(B)(*1*).
26.11.29.04	General Requirements for Affected Trading Sources.	5/1/00	1/10/01, 66 FR 1866.	(c)(154)(i)(B)(*1*).
26.11.29.05	NO_X Allowance Allocations	5/1/00	1/10/01, 66 FR 1866.	(c)(154)(i)(B)(*1*).
26.11.29.06	Compliance Supplement Pool	5/1/00	1/10/01, 66 FR 1866.	(c)(154)(i)(B)(*1*).
26.11.29.07	Allowance Banking	5/1/00	1/10/01, 66 FR 1866.	(c)(154)(i)(B)(*1*).
26.11.29.08	Emission Monitoring	5/1/00	1/10/01, 66 FR 1866.	(c)(154)(i)(B)(*1*).
26.11.29.09	Requirements for New Sources and Set-Aside Pool.	11/24/03	3/22/04, 69 FR 13236.	(c)(184)(i)(C)(*1*)–(*5*).
26.11.29.10	Reporting	5/1/00	1/10/01, 66 FR 1866.	(c)(154)(i)(B)(*1*).
26.11.29.11	Recordkeeping	5/1/00	1/10/01, 66 FR 1866.	(c)(154)(i)(B)(*1*).
26.11.29.12	End-of-Season Reconciliation	5/1/00	1/10/01, 66 FR 1866.	(c)(154)(i)(B)(*1*).
26.11.29.13	Compliance Certification	5/1/00	1/10/01, 66 FR 1866.	(c)(154)(i)(B)(*1*).
26.11.29.14	Penalties	5/1/00	1/10/01, 66 FR 1866.	(c)(154)(i)(B)(*1*).
26.11.29.15	Requirements for Affected Nontrading Sources.	5/1/00	1/10/01, 66 FR 1866.	(c)(154)(i)(B)(*1*).
26.11.30 Policies and Procedures Relating to Maryland's NO_X Reduction and Trading Program				
26.11.30.01	Scope and Applicability	5/1/00	1/10/01, 66 FR 1866.	(c)(154)(i)(B)(*2*).
26.11.30.02	Definitions	5/1/00	1/10/01, 66 FR 1866.	(c)(154)(i)(B)(*2*).
26.11.30.03	Procedures Relating to Compliance Accounts and Overdraft Accounts.	5/1/00	1/10/01, 66 FR 1866.	(c)(154)(i)(B)(*2*).
26.11.30.04	Procedures Relating to General Accounts.	5/1/00	1/10/01, 66 FR 1866.	(c)(154)(i)(B)(*2*).
26.11.30.05	Allowance Banking	5/1/00	1/10/01, 66 FR 1866.	(c)(154)(i)(B)(*2*).
26.11.30.06	Allowance Transfers	5/1/00	1/10/01, 66 FR 1866.	(c)(154)(i)(B)(*2*).
26.11.30.07	Early Reductions	5/1/00	1/10/01, 66 FR 1866.	(c)(154)(i)(B)(*2*).
26.11.30.08	Opt-In Procedures	5/1/00	1/10/01, 66 FR 1866.	(c)(154)(i)(B)(*2*).
26.11.30.09	Allocation of Allowances	11/24/03	3/22/04, 69 FR 13236.	(c)(184)(i)(A)(*1*)–(*3*).
26.11.32 Control of Emissions of Volatile Organic Compounds From Consumer Products				
26.11.32.01	Applicability and Exemptions	8/18/03	12/9/03, 68 FR 68523.	(c)(185).
26.11.32.02	Incorporation by Reference	8/18/03	12/9/03 68 FR 68523.	(c)(185).

EPA-APPROVED REGULATIONS IN THE MARYLAND SIP—Continued

Code of Maryland administrative regulations (COMAR) citation	Title/subject	State effective date	EPA approval date	Additional explanation/citation at 40 CFR 52.1100
26.11.32.03	Definitions	8/18/03	12/9/03, 68 FR 68523.	(c)(185).
26.11.32.04	Standards—General	8/18/03	12/9/03, 68 FR 68523.	(c)(185).
26.11.32.05	Standards—Requirements for Charcoal Lighter Materials.	8/18/03	12/9/03, 68 FR 68523.	(c)(185).
26.11.32.06	Standards—Requirements for Aerosol Adhesives.	8/18/03	12/9/03, 68 FR 68523.	(c)(185).
26.11.32.07	Standards—Requirements for Floor Wax Strippers.	8/18/03	12/9/03, 68 FR 68523.	(c)(185).
26.11.32.08	Innovative Products—CARB Exemption	8/18/03	12/9/03, 68 FR 68523.	(c)(185).
26.11.32.09	Innovative Products—Department Exemption.	8/18/03	12/9/03, 68 FR 68523.	(c)(185).
26.11.32.10	Administrative Requirements	8/18/03	12/9/03, 68 FR 68523.	(c)(185).
26.11.32.11	Reporting Requirements	8/18/03	12/9/03, 68 FR 68523.	(c)(185).
26.11.32.12	Variances	8/18/03	12/9/03, 68 FR 68523.	(c)(185).
26.11.32.13	Test Methods	8/18/03	12/9/03, 68 FR 68523.	(c)(185).
26.11.32.14	Alternative Control Plan (ACP)	8/18/03	12/9/03, 68 FR 68523.	(c)(185).
26.11.32.15	Approval of an ACP Application	8/18/03	12/9/03, 68 FR 68523.	(c)(185).
26.11.32.16	Record keeping and Availability of Requested Information.	8/18/03	12/9/03, 68 FR 68523.	(c)(185).
26.11.32.17	Violations	8/18/03	12/9/03, 68 FR 68523.	(c)(185).
26.11.32.18	Surplus Reductions and Surplus Trading.	8/18/03	12/9/03, 68 FR 68523.	(c)(185).
26.11.32.19	Limited-Use Surplus Reduction Credits for Early Reformulations of ACP Products.	8/18/03	12/9/03, 68 FR 68523.	(c)(185).
26.11.32.20	Reconciliation of Shortfalls	8/18/03	12/9/03, 68 FR 68523.	(c)(185).
26.11.32.21	Modifications to an ACP	8/18/03	12/9/03, 68 FR 68523.	(c)(185).
26.11.32.22	Cancellation of an ACP	8/18/03	12/9/03, 68 FR 68523.	(c)(185).
26.11.32.23	Transfer of an ACP	8/18/03	12/9/03, 68 FR 68523.	(c)(185).
26.11.33 Architectural Coatings				
26.11.33.01	Applicability and Exemptions	3/29/04	5/12/05, 70 FR 24979.	
26.11.33.02	Test Methods—Incorporation by Reference.	3/29/04	5/12/05, 70 FR 24979.	
26.11.33.03	Definitions	3/29/04	5/12/05, 70 FR 24979.	
26.11.33.04	General Standard—VOC Content Limits	3/29/04	5/12/05, 70 FR 24979.	
26.11.33.05	VOC Content Limits	3/29/04	5/12/05, 70 FR 24979.	
26.11.33.06	Most Restrictive VOC Limit	2/28/05	10/19/05, 70 FR 60740.	Addition of sections B(15) through B(19).
26.11.33.07	Painting Restrictions	3/29/04	5/12/05, 70 FR 24979.	
26.11.33.08	Thinning	3/29/04	5/12/05, 70 FR 24979.	
26.11.33.09	Rust Preventive Coatings	3/29/04	5/12/05, 70 FR 24979.	
26.11.33.10	Coatings Not Listed in Regulation .05	2/28/05	10/19/05, 70 FR 60740.	
26.11.33.11	Lacquers	3/29/04	5/12/05, 70 FR 24979.	

EPA-APPROVED REGULATIONS IN THE MARYLAND SIP—Continued

Code of Maryland administrative regulations (COMAR) citation	Title/subject	State effective date	EPA approval date	Additional explanation/citation at 40 CFR 52.1100
26.11.33.12	Container Labeling Requirements	2/28/05	10/19/05, 70 FR 60740.	Deleted section K.
26.11.33.13	Recordkeeping Requirements	2/28/05	10/19/05, 70 FR 60740.	
26.11.33.14	Compliance Provisions and Test Methods.	3/29/04	5/12/05, 70 FR 24979.	
11.14.08 Vehicle Emissions Inspection Program				
11.14.08.01	Title	1/2/95	10/29/99, 64 FR 58340.	(c)(144).
11.14.08.02	Definitions	1/2/95 10/19/98	10/29/99, 64 FR 58340.	(c)(144).
11.14.08.03	Applicability	6/10/02	1/16/03, 68 FR 2208.	(c)(179).
11.14.08.04	Exemptions	1/2/95	10/29/99, 64 FR 58340.	(c)(144).
11.14.08.05	Schedule of the Program	1/2/95 12/16/96	10/29/99, 64 FR 58340.	(c)(144).
11.14.08.06	Certificates	6/10/02	1/16/03, 68 FR 2208.	(c)(179).
11.14.08.07	Extensions	1/2/95 10/19/98	10/29/99, 64 FR 58340.	(c)(144).
11.14.08.08	Enforcement	1/2/95	10/29/99, 64 FR 58340.	(c)(144).
11.14.08.09	Inspection Standards	6/10/02	1/16/03, 68 FR 2208.	(c)(179).
11.14.08.10	General Requirements for Inspection and Preparation for Inspection.	1/2/95 12/16/96 10/19/98	10/29/99, 64 FR 58340.	(c)(144).
11.14.08.11	Idle Exhaust Emissions Test and Equipment Checks.	10/18/98	10/29/99, 64 FR 58340.	(c)(144).
11.14.08.11–1	Transient Exhaust Emissions Test and Evaporative Purge Test Sequence.	12/16/96 10/19/98	10/29/99, 64 FR 58340.	(c)(144).
11.14.08.12	Evaporative Integrity Test, Gas Cap Leak Test, and On-Board Diagnostics Interrogation Procedures.	6/10/02	1/16/03, 68 FR 2208.	(c)(179).
11.14.08.13	Failed Vehicle and Reinspection Procedures.	1/2/95	10/29/99, 64 FR 58340.	(c)(144).
11.14.08.14	Dynamometer System Specifications	1/2/95	10/29/99, 64 FR 58340.	(c)(144).
11.14.08.15	Constant Volume Sampler, Analysis System, and Inspector Control Specifications.	1/2/95 10/19/98	10/29/99, 64 FR 58340.	(c)(144).
11.14.08.16	Evaporative Test Equipment, Gas Cap Leak Test Equipment, and on-Board Diagnostics Interrogation Equipment Specifications.	6/10/02	1/16/03, 68 FR 2208.	(c)(179).
11.14.08.17	Quality Assurance and Maintenance-General Requirements.	1/2/95	10/29/99, 64 FR 58340.	(c)(144).
11.14.08.18	Test Assurance Procedures	1/2/95	10/29/99, 64 FR 58340.	(c)(144).
11.14.08.19	Dynamometer Periodic Quality Assurance Checks.	1/2/95	10/29/99, 64 FR 58340.	(c)(144).
11.14.08.20	Constant Volume Sampler Periodic Quality Assurance Checks.	1/2/95	10/29/99, 64 FR 58340.	(c)(144).
11.14.08.21	Analysis System Periodic Quality Assurance Checks.	1/2/95	10/29/99, 64 FR 58340.	(c)(144).
11.14.08.22	Evaporative Test Equipment, Gas Cap Leak Test Equipment and On-board Diagnostics Interrogation Equipment Periodic Quality Assurance Checks.	1/2/95 10/19/98	10/29/99, 64 FR 58340.	(c)(144).
11.14.08.23	Overall System Performance Quality Assurance.	1/2/95	10/29/99, 64 FR 58340.	(c)(144).
11.14.08.24	Control Charts	1/2/95	10/29/99, 64 FR 58340.	(c)(144).
11.14.08.25	Gas Specifications	1/2/95	10/29/99, 64 FR 58340.	(c)(144).

EPA-APPROVED REGULATIONS IN THE MARYLAND SIP—Continued

Code of Maryland administrative regulations (COMAR) citation	Title/subject	State effective date	EPA approval date	Additional explanation/citation at 40 CFR 52.1100
11.14.08.26	Vehicle Emissions Inspection Station	1/2/95	10/29/99, 64 FR 58340.	(c)(144).
11.14.08.27	Technician's Vehicle Report	1/2/95 10/19/98	10/29/99, 64 FR 58340.	(c)(144).
11.14.08.28	Feedback Reports	1/2/95 10/19/98	10/29/99, 64 FR 58340.	(c)(144).
11.14.08.29	Certified Emissions Technicians	1/2/95 12/16/96	10/29/99, 64 FR 58340.	(c)(144).
11.14.08.30	Certified Emissions Repair Facility	1/2/95 12/16/96	10/29/99, 64 FR 58340.	(c)(144).
11.14.08.31	On-Highway Emissions Test	1/2/95	10/29/99, 64 FR 58340.	(c)(144).
11.14.08.32	Fleet Inspection Station	1/2/95 12/16/96 10/19/98	10/29/99, 64 FR 58340.	(c)(144).
11.14.08.33	Fleet Inspection Standards	1/2/95	10/29/99, 64 FR 58340.	(c)(144).
11.14.08.34	Fleet Inspection and Reinspection Methods.	1/2/95	10/29/99, 64 FR 58340.	(c)(144).
11.14.08.35	Fleet Equipment and Quality Assurance Requirements.	1/2/95	10/29/99, 64 FR 58340.	(c)(144).
11.14.08.36	Fleet Personnel Requirements	1/2/95	10/29/99, 64 FR 58340.	(c)(144).
11.14.08.37	Fleet Calibration Gas Specifications and Standard Reference Methods.	1/2/95	10/29/99, 64 FR 58340.	(c)(144).
11.14.08.38	Fleet Recordkeeping Requirements	1/2/95	10/29/99, 64 FR 58340.	(c)(144).
11.14.08.39	Fleet Fees	1/2/95	10/29/99, 64 FR 58340.	(c)(144).
11.14.08.40	Fleet License Suspension and Revocation.	1/2/95	10/29/99, 64 FR 58340.	(c)(144).
11.14.08.41	Audits	1/2/95	10/29/99, 64 FR 58340.	(c)(144).
11.14.08.42	Fleet Inspection After 1998	1/2/95 2/16/96 10/19/98	10/29/99, 64 FR 58340.	(c)(144).
03.03.05 Motor Fuel Inspection [Contingency SIP Measure]				
03.03.05.01	Definitions	12/18/95	1/30/96, 61 FR 2982.	(c)(101)(i)(B)(*4*); Approved as a contingency SIP measure as part of the CO Maintenance Plans for Baltimore and DC. [(c)(117) and (c)(118)].
03.03.05.01–1	Standard Specifications for Gasoline	12/18/95		
03.03.05.02–1	Other Motor Vehicle Fuels	10/26/92	1/30/96, 61 FR 2982. 6/10/94, 58 FR 29957.	
03.03.05.05	Labeling of Pumps	12/18/95	1/30/96, 61 FR 2982.	
03.03.05.08	Samples and Test Tolerance	10/26/92	6/10/94, 58 FR 29957.	
03.03.05.15	Commingled Products	10/26/92	6/10/94, 58 FR 29957.	
03.03.06 Emissions Control Compliance [Contingency SIP Measure]				
03.03.06.01	Definitions	12/18/95	1/30/96, 61 FR 2982.	(c)(101)(i)(B)(*5*); Approved as a contingency SIP measure as part of the CO Maintenance Plans for Baltimore and DC. [(c)(117) and (c)(118)].
03.03.06.02	Vapor Pressure Determination	10/26/92		
03.03.06.03	Oxygen Content Determination	12/18/95	6/10/94, 58 FR 29957. 1/30/96, 61 FR 2982.	
03.03.06.04	Registration	10/26/92	6/10/94, 58 FR 29957.	
03.03.06.05	Recordkeeping	10/26/92	6/10/94, 58 FR 29957.	
03.03.06.06	Transfer Documentation	12/18/95	1/30/96, 61 FR 2982.	

EPA-APPROVED REGULATIONS IN THE MARYLAND SIP—Continued

Code of Maryland administrative regulations (COMAR) citation	Title/subject	State effective date	EPA approval date	Additional explanation/citation at 40 CFR 52.1100
TM Technical Memoranda				
TM81–04	Procedures for Observing and Evaluating Visible Emissions from Stationary Sources.	5/1/81	6/18/82, 47 FR 26381.	(c)(67).
TM83–05	Stack Test Methods for Stationary Sources.	6/1/83	2/23/85, 50 FR 7595.	(c)(80).
TM91–01 [*Except* Methods 1004, 1004A through I, 1010].	Test Methods and Equipment Specifications for Stationary Sources.	2/15/93	9/7/94, 59 FR 46105.	(c)(105)(i)(B)(*1*).

[1] Recodified 8/1/88.

* * * * *

[FR Doc. 06–385 Filed 2–1–06; 8:45 am]

BILLING CODE 6560–50–P

Proposed Rules

Federal Register
Vol. 71, No. 22
Thursday, February 2, 2006

This section of the FEDERAL REGISTER contains notices to the public of the proposed issuance of rules and regulations. The purpose of these notices is to give interested persons an opportunity to participate in the rule making prior to the adoption of the final rules.

DEPARTMENT OF TRANSPORTATION

Federal Aviation Administration

14 CFR Part 39

[Docket No. FAA–2005–20691; Directorate Identifier 2004–NM–249–AD]

RIN 2120–AA64

Airworthiness Directives; Boeing Model 757–200 and –300 Series Airplanes

AGENCY: Federal Aviation Administration (FAA), Department of Transportation (DOT).

ACTION: Proposed rule; withdrawal.

SUMMARY: The FAA withdraws a notice of proposed rulemaking (NPRM) that proposed a new airworthiness directive (AD) for certain Boeing Model 757–200 and –300 series airplanes. The proposed AD would have required inspecting for the part number, the serial number, and the mark ''RETESTED'' on the reaction link of the main landing gear (MLG), and replacing the reaction link of the MLG with a retested reaction link if necessary. Since the proposed AD was issued, we have received new data that all suspect reaction links of the MLG have been replaced with acceptable reaction links, and the suspect reaction links have been sent back to the reaction link manufacturer. Accordingly, the proposed AD is withdrawn.

ADDRESSES: You may examine the AD docket on the Internet at *http://dms.dot.gov,* or in person at the Docket Management Facility office between 9 a.m. and 5 p.m., Monday through Friday, except Federal holidays. The Docket Management Facility office (telephone (800) 647–5227) is located on the plaza level of the Nassif Building at the U.S. Department of Transportation, 400 Seventh Street SW., room PL–401, Washington, DC. This docket number is FAA–2005–20691; the directorate identifier for this docket is 2004–NM–249–AD.

FOR FURTHER INFORMATION CONTACT: Dennis Stremick, Aerospace Engineer, Airframe Branch, ANM–120S, FAA, Seattle Aircraft Certification Office, 1601 Lind Avenue, SW., Renton, Washington 98055–4056; telephone (425) 917–6450; fax (425) 917–6590.

SUPPLEMENTARY INFORMATION:

Discussion

We proposed to amend part 39 of the Federal Aviation Regulations (14 CFR part 39) with a notice of proposed rulemaking (NPRM) for a new AD for certain Boeing Model 757–200 and –300 series airplanes. That NPRM was published in the **Federal Register** on March 23, 2005 (70 FR 14585). The NPRM would have required inspecting for the part number, the serial number, and the mark ''RETESTED'' on the reaction link of the main landing gear (MLG), and replacing the reaction link of the MLG with a retested reaction link if necessary. The NPRM resulted from a report of faulty welds in certain reaction links. The proposed actions were intended to prevent failure of the reaction link, collapse of the MLG, and consequently, loss of control on the ground and possible damage to the airplane.

Actions Since NPRM Was Issued

Since we issued the NPRM, we have received confirmation that, world-wide, all suspect reaction links of the MLG have been replaced with acceptable reaction links, and the suspect reaction links have been sent back to the reaction link manufacturer.

FAA's Conclusions

Upon further consideration, we have determined that the suspect reaction links are not installed on any airplane and have been altered in such a way as to be impossible to be reinstalled on an airplane. Accordingly, the NPRM is withdrawn.

Withdrawal of the NPRM does not preclude the FAA from issuing another related action or commit the FAA to any course of action in the future.

Regulatory Impact

Since this action only withdraws an NPRM, it is neither a proposed nor a final rule and therefore is not covered under Executive Order 12866, the Regulatory Flexibility Act, or DOT Regulatory Policies and Procedures (44 FR 11034, February 26, 1979).

List of Subjects in 14 CFR Part 39

Air transportation, Aircraft, Aviation safety, Safety.

The Withdrawal

Accordingly, we withdraw the NPRM, Docket No. FAA–2005–20691, Directorate Identifier 2004–NM–249–AD, which was published in the **Federal Register** on March 23, 2005 (70 FR 14585).

Issued in Renton, Washington, on January 24, 2006.

Ali Bahrami,

Manager, Transport Airplane Directorate, Aircraft Certification Service.

[FR Doc. E6–1415 Filed 2–1–06; 8:45 am]

BILLING CODE 4910–13–P

DEPARTMENT OF TRANSPORTATION

Federal Aviation Administration

14 CFR Part 39

[Docket No. FAA–2006–23760; Directorate Identifier 2005–NM–211–AD]

RIN 2120–AA64

Airworthiness Directives; Airbus Model A300 B4–600R and A300 F4–600R Series Airplanes

AGENCY: Federal Aviation Administration (FAA), Department of Transportation (DOT).

ACTION: Notice of proposed rulemaking (NPRM).

SUMMARY: The FAA proposes to supersede an existing airworthiness directive (AD) that applies to certain Airbus Model A300 B4–600R and A300 F4–600R series airplanes. The existing AD requires repetitive inspections for damage of the center tank fuel pumps and fuel pump canisters and replacement of any damaged parts, and mandates modification of the canisters of the center tank fuel pumps, which terminates the repetitive inspections. For certain airplanes, this proposed AD would require a one-time inspection of the attachment bolts of the outlet flange of the canisters of the center tank fuel pumps for bolts that are too short and do not protrude through the nut, and replacement of the bolts if necessary. This proposed AD results from several reports that the attachment bolts for the canisters, modified by the requirements in the existing AD, are too short and do

not fully protrude from the nuts. We are proposing this AD to prevent damage to the fuel pump and fuel pump canister, which could result in loss of flame trap capability and could provide a fuel ignition source in the center fuel tank.

DATES: We must receive comments on this proposed AD by March 6, 2006.

ADDRESSES: Use one of the following addresses to submit comments on this proposed AD.

- DOT Docket Web site: Go to *http://dms.dot.gov* and follow the instructions for sending your comments electronically.
- Government-wide rulemaking Web site: Go to *http://www.regulations.gov* and follow the instructions for sending your comments electronically.
- Mail: Docket Management Facility; U.S. Department of Transportation, 400 Seventh Street, SW., Nassif Building, room PL–401, Washington, DC 20590.
- Fax: (202) 493–2251.
- Hand Delivery: Room PL–401 on the plaza level of the Nassif Building, 400 Seventh Street, SW., Washington, DC, between 9 a.m. and 5 p.m., Monday through Friday, except Federal holidays.

Contact Airbus, 1 Rond Point Maurice Bellonte, 31707 Blagnac Cedex, France, for service information identified in this proposed AD.

FOR FURTHER INFORMATION CONTACT: Thomas Stafford, Aerospace Engineer, International Branch, ANM–116, FAA, Transport Airplane Directorate, 1601 Lind Avenue, SW., Renton, Washington 98055–4056; telephone (425) 227–1622; fax (425) 227–1149.

SUPPLEMENTARY INFORMATION:

Comments Invited

We invite you to submit any relevant written data, views, or arguments regarding this proposed AD. Send your comments to an address listed in the **ADDRESSES** section. Include the docket number ''Docket No. FAA–2006–23760; Directorate Identifier 2005–NM–211–AD'' at the beginning of your comments. We specifically invite comments on the overall regulatory, economic, environmental, and energy aspects of the proposed AD. We will consider all comments received by the closing date and may amend the proposed AD in light of those comments.

We will post all comments we receive, without change, to *http://dms.dot.gov,* including any personal information you provide. We will also post a report summarizing each substantive verbal contact with FAA personnel concerning this proposed AD. Using the search function of that web site, anyone can find and read the comments in any of our dockets, including the name of the individual who sent the comment (or signed the comment on behalf of an association, business, labor union, etc.). You may review the DOT's complete Privacy Act Statement in the **Federal Register** published on April 11, 2000 (65 FR 19477–78), or you may visit *http://dms.dot.gov.*

Examining the Docket

You may examine the AD docket on the Internet at *http://dms.dot.gov,* or in person at the Docket Management Facility office between 9 a.m. and 5 p.m., Monday through Friday, except Federal holidays. The Docket Management Facility office (telephone (800) 647–5227) is located on the plaza level of the Nassif Building at the DOT street address stated in the **ADDRESSES** section. Comments will be available in the AD docket shortly after the Docket Management System receives them.

Discussion

On November 1, 2004, we issued AD 2004–23–08, amendment 39–13863 (69 FR 65528, November 15, 2004), for certain Airbus Model A300 B4–600R and A300 F4–600R series airplanes. That AD superseded AD 99–27–07, amendment 39–11488 (65 FR 213, January 4, 2000), to mandate modification of the canisters of the center tank fuel pumps, which would terminate the repetitive inspections required by AD 99–27–07. AD 2004–23–08 resulted from the issuance of a new French airworthiness directive, 2002–132(B), dated March 20, 2002, which mandated the modification. We issued that AD to prevent damage to the fuel pump and fuel pump canister, which could result in loss of flame trap capability and could provide a fuel ignition source in the center fuel tank.

Actions Since Existing AD Was Issued

Since we issued AD 2004–23–08, the Direction Gonorale de l'Aviation Civile (DGAC), which is the airworthiness authority for France, advises that it has received several reports that the attachment bolts for the canisters, modified by the requirements in the existing French AD, are too short and do not fully protrude from the nuts. In light of these findings, the DGAC has issued French airworthiness directive F–2005–147, dated August 17, 2005. French airworthiness directive F–2005–147 adds a one-time inspection for bolts that are too short and do not protrude from the nut, and replacement of the bolts if necessary.

Relevant Service Information

Airbus has issued Service Bulletin A300–28–6069, Revision 02, dated October 17, 2003. For airplanes on which the modification specified in the original issue or Revision 01 of the service bulletin has been accomplished, Revision 02 includes additional work. That additional work involves a one-time inspection of the attachment bolts of the outlet flange of the canisters of the center tank fuel pumps for bolts that are too short and do not protrude from the nut, and replacement of the bolts if necessary.

Airbus has also issued Service Bulletin A300–28–6087, dated April 8, 2005, for airplanes on which Airbus Service Bulletin A300–28–6069, dated September 4, 2001, or Revision 01, dated May 28, 2002, has been accomplished. The service bulletin describes procedures for a one-time inspection of the attachment bolts of the outlet flange of the canisters of the center tank fuel pumps for bolts that are too short and do not protrude from the nut, and replacement of the bolts if necessary.

Accomplishing the actions specified in the service information is intended to adequately address the unsafe condition. The DGAC mandated the service information and issued French airworthiness directive F–2005–147, dated August 17, 2005, to ensure the continued airworthiness of these airplanes in France.

FAA's Determination and Requirements of the Proposed AD

These airplane models are manufactured in France and are type certificated for operation in the United States under the provisions of section 21.29 of the Federal Aviation Regulations (14 CFR 21.29) and the applicable bilateral airworthiness agreement. Pursuant to this bilateral airworthiness agreement, the DGAC has kept the FAA informed of the situation described above. We have examined the DGAC's findings, evaluated all pertinent information, and determined that AD action is necessary for airplanes of this type design that are certificated for operation in the United States.

This proposed AD would supersede AD 2004–23–08 and would continue to require repetitive inspections for damage of the center tank fuel pumps and fuel pump canisters and replacement of any damaged parts, and modification of the canisters of the center tank fuel pumps, which terminates the repetitive inspections. For certain airplanes, this proposed AD would also require a one-time

inspection of the attachment bolts of the outlet flange of the canisters of the center tank fuel pumps for bolts that are too short and do not protrude through the nut, and replacement of the bolts if necessary.

Difference Between Proposed AD and French Airworthiness Directive

The applicability of the French airworthiness directive excludes airplanes on which Airbus Service Bulletin A300–28–6069, Revision 2, or A300–28–6087 were accomplished in service. However, we have not excluded those airplanes in the applicability of this proposed AD; rather, this proposed AD would include a requirement to accomplish the actions specified in those service bulletins. This proposed requirement would ensure that the actions specified in those service bulletins are accomplished on all affected airplanes. Operators must continue to operate the airplane in the configuration required by this proposed AD unless an alternative method of compliance is approved.

Clarification of Inspection Terminology

In this proposed AD, the ''inspection'' specified in the service bulletins is referred to as a ''detailed inspection.''

Change to Existing AD

This proposed AD would retain the requirements of the existing AD. Since AD 2004–23–08 was issued, the AD format has been revised, and certain paragraphs have been rearranged. As a result, the corresponding paragraph identifiers have changed in this proposed AD, as listed in the following table:

REVISED PARAGRAPH IDENTIFIERS

Requirement in AD 2004–23–08	Corresponding requirement in this proposed AD
Paragraph (a)	Paragraph (f).
Paragraph (b)	Paragraph (g).
Paragraph (c)	Paragraph (h).
Paragraph (d)	Paragraph (i).

Clarification of Alternative Method of Compliance (AMOC) Paragraph

We have revised this action to clarify the appropriate procedure for notifying the principal inspector before using any approved AMOC on any airplane to which the AMOC applies.

Costs of Compliance

This proposed AD would affect about 101 airplanes of U.S. registry.

The inspections that are required by AD 99–27–07, and retained in this proposed AD, take about 2 work hours per airplane, at an average labor rate of $65 per work hour. Based on these figures, the estimated cost of the currently required inspections is $130 per airplane, per inspection cycle.

The modification that is required by AD 2004–23–08, and retained in this proposed AD, takes about 2 work hours per airplane, at an average labor rate of $65 per work hour. Required parts will cost about $9,620 per airplane. Based on these figures, the estimated cost of the currently required modification is $9,750 per airplane.

The new proposed one-time inspection would take about 1 work hour per airplane, at an average labor rate of $65 per work hour. Based on these figures, the estimated cost of the new inspection specified in this proposed AD for U.S. operators is $6,565 or $65 per airplane.

Authority for This Rulemaking

Title 49 of the United States Code specifies the FAA's authority to issue rules on aviation safety. Subtitle I, Section 106, describes the authority of the FAA Administrator. Subtitle VII, Aviation Programs, describes in more detail the scope of the Agency's authority.

We are issuing this rulemaking under the authority described in Subtitle VII, Part A, Subpart III, Section 44701, ''General requirements.'' Under that section, Congress charges the FAA with promoting safe flight of civil aircraft in air commerce by prescribing regulations for practices, methods, and procedures the Administrator finds necessary for safety in air commerce. This regulation is within the scope of that authority because it addresses an unsafe condition that is likely to exist or develop on products identified in this rulemaking action.

Regulatory Findings

We have determined that this proposed AD would not have federalism implications under Executive Order 13132. This proposed AD would not have a substantial direct effect on the States, on the relationship between the national Government and the States, or on the distribution of power and responsibilities among the various levels of government.

For the reasons discussed above, I certify that the proposed regulation:

1. Is not a ''significant regulatory action'' under Executive Order 12866;

2. Is not a ''significant rule'' under the DOT Regulatory Policies and Procedures (44 FR 11034, February 26, 1979); and

3. Will not have a significant economic impact, positive or negative, on a substantial number of small entities under the criteria of the Regulatory Flexibility Act.

We prepared a regulatory evaluation of the estimated costs to comply with this proposed AD and placed it in the AD docket. See the **ADDRESSES** section for a location to examine the regulatory evaluation.

List of Subjects in 14 CFR Part 39

Air transportation, Aircraft, Aviation safety, Safety.

The Proposed Amendment

Accordingly, under the authority delegated to me by the Administrator, the FAA proposes to amend 14 CFR part 39 as follows:

PART 39—AIRWORTHINESS DIRECTIVES

1. The authority citation for part 39 continues to read as follows:

Authority: 49 U.S.C. 106(g), 40113, 44701.

§ 39.13 [Amended]

2. The Federal Aviation Administration (FAA) amends § 39.13 by removing amendment 39–13863 (69 FR 65528, November 15, 2004) and adding the following new airworthiness directive (AD):

Airbus: Docket No. FAA–2006–23760; Directorate Identifier 2005–NM–211–AD.

Comments Due Date

(a) The FAA must receive comments on this AD action by March 6, 2006.

Affected ADs

(b) This AD supersedes AD 2004–23–08.

Applicability

(c) This AD applies to Airbus Model A300 B4–605R and B4–622R airplanes, and A300 F4–605R and F4–622R airplanes; certificated in any category; on which Airbus Modification 4801 has been accomplished; except airplanes on which Airbus Modification 12314 has been installed in production.

Unsafe Condition

(d) This AD results from several reports that the attachment bolts for the canisters, modified by the requirements in the existing AD, are too short and do not fully protrude from the nuts. We are issuing this AD to prevent damage to the fuel pump and fuel pump canister, which could result in loss of flame trap capability and could provide a fuel ignition source in the center fuel tank.

Compliance

(e) You are responsible for having the actions required by this AD performed within the compliance times specified, unless the actions have already been done.

Restatement of Requirements of AD 2004–23–08

Inspections

(f) Prior to the accumulation of 5,000 total hours' time-in-service or within 250 hours' time-in-service after February 8, 2000 (the effective date of AD 99–27–07, (superseded by AD 2004–23–08) amendment 39–11488), whichever occurs later, perform a detailed inspection for damage of the center tank fuel pumps and fuel pump canisters, in accordance with Airbus All Operators Telex (AOT) 28–09, dated November 28, 1998. Repeat the inspection prior to the accumulation of 12,000 total hours' time-in-service, or within 250 hours' time-in-service after accomplishment of the initial inspection, whichever occurs later. Thereafter, repeat the inspection at intervals not to exceed 250 hours' time-in-service, until accomplishment of the initial inspection required by paragraph (g) of this AD.

Note 1: For the purposes of this AD, a detailed inspection is: ''An intensive examination of a specific item, installation, or assembly to detect damage, failure, or irregularity. Available lighting is normally supplemented with a direct source of good lighting at an intensity deemed appropriate. Inspection aids such as mirror, magnifying lenses, etc., may be necessary. Surface cleaning and elaborate procedures may be required.''

(g) At the applicable time specified in paragraph (g)(1), (g)(2), or (g)(3) of this AD: Perform a detailed inspection to detect damage of the center tank fuel pumps and perform an eddy current inspection to detect damage of the fuel pump canisters, in accordance with Airbus Alert Service Bulletin A300–28A6061, dated February 19, 1999; or Airbus Service Bulletin A300–28–6061, Revision 04, dated August 1, 2002. Repeat the inspections thereafter at intervals not to exceed 1,500 flight cycles, until accomplishment of paragraph (i) of this AD. Accomplishment of the inspection required by this paragraph constitutes terminating action for the requirements of paragraph (f) of this AD.

(1) For airplanes that have accumulated 11,000 or more total flight cycles as of February 8, 2000: Inspect within 300 flight cycles after February 8, 2000.

(2) For airplanes that have accumulated 8,500 or more total flight cycles, but fewer than 11,000 total flight cycles, as of February 8, 2000: Inspect within 750 flight cycles after February 8, 2000.

(3) For airplanes that have accumulated fewer than 8,500 total flight cycles as of February 8, 2000: Inspect prior to the accumulation of 7,000 flight cycles, or within 1,500 flight cycles after February 8, 2000, whichever occurs later.

Corrective Action

(h) If any damage is detected during any inspection required by this AD, prior to further flight, replace the damaged fuel pump or fuel pump canister with a new or serviceable part in accordance with Airbus Alert Service Bulletin A300–28A6061, dated February 19, 1999; or Airbus Service Bulletin A300–28–6061, Revision 04, dated August 1, 2002.

Modification

(i) Within 18 months after December 20, 2004 (the effective date of AD 2004–23–08): Modify the canisters of the center tank fuel pumps (including an operational test) by doing all the actions in accordance with paragraphs 3.A., 3.B., 3.C., and 3.D. of the Accomplishment Instructions of Airbus Service Bulletin A300–28–6069, dated September 4, 2001; Revision 01, dated May 28, 2002; or Revision 02, dated October 17, 2003. After the effective date of this AD, Revision 02 of the service bulletin must be used for accomplishing the modification. Accomplishing this modification ends the repetitive inspections required by paragraph (g) of this AD.

New Requirements of This AD

One-Time Inspection/Replacement if Necessary

(j) For airplanes on which Airbus Service Bulletin A300–28–6069, dated September 4, 2001, or Revision 01, dated May 28, 2002, has been accomplished before the effective date of this AD: Within 18 months after the effective date of this AD, perform a one-time detailed inspection of the attachment bolts of the outlet flange of the canisters of the center tank fuel pumps for bolts that are too short and do not protrude through the nut, and replace the bolts as applicable, by doing all the actions in accordance with paragraphs 3.A., 3.B., 3.C., 3.D., and 3.E. of the Accomplishment Instructions of Airbus Service Bulletin A300–28–6087, dated April 8, 2005. Do any applicable bolt replacement before further flight.

Alternative Methods of Compliance (AMOCs)

(k)(1) The Manager, International Branch, ANM–116, Transport Airplane Directorate, FAA, has the authority to approve AMOCs for this AD, if requested in accordance with the procedures found in 14 CFR 39.19.

(2) Before using any AMOC approved in accordance with § 39.19 on any airplane to which the AMOC applies, notify the appropriate principal inspector in the FAA Flight Standards Certificate Holding District Office.

(3) AMOCs approved previously in accordance with AD 2004–23–08 are approved as AMOCs for the corresponding provisions of this AD.

Related Information

(l) French airworthiness directive F–2005–147, dated August 17, 2005, also addresses the subject of this AD.

Issued in Renton, Washington, on January 25, 2006.

Ali Bahrami,

Manager, Transport Airplane Directorate, Aircraft Certification Service.

[FR Doc. E6–1418 Filed 2–1–06; 8:45 am]

BILLING CODE 4910–13–P

DEPARTMENT OF TRANSPORTATION

Federal Aviation Administration

14 CFR Part 39

[Docket No. FAA–2006–23762; Directorate Identifier 2005–NM–226–AD]

RIN 2120–AA64

Airworthiness Directives; Boeing Model 767 Airplanes

AGENCY: Federal Aviation Administration (FAA), Department of Transportation (DOT).

ACTION: Notice of proposed rulemaking (NPRM).

SUMMARY: The FAA proposes to adopt a new airworthiness directive (AD) for all Boeing Model 767 airplanes. This proposed AD would require repetitive inspections for cracking in the skin, the bulkhead outer chord, and the strap of the bulkhead outer chord at station (STA) 1725.5; and repair if necessary. This proposed AD also provides for repairs, which are optional for airplanes on which no cracking is found, that terminate certain inspections. This proposed AD results from reports of cracking in the skin panel common to stringer 7R and aft of the STA 1725.5 butt splice, and in the strap of the bulkhead outer chord at STA 1725.5. We are proposing this AD to detect and correct cracking in the skin, the bulkhead outer chord, or the strap of the bulkhead outer chord in this area, which could progress into surrounding areas and result in reduced structural integrity of the support structure for the vertical or horizontal stabilizer and subsequent loss of control of the airplane.

DATES: We must receive comments on this proposed AD by March 20, 2006.

ADDRESSES: Use one of the following addresses to submit comments on this proposed AD.

- DOT Docket Web site: Go to *http://dms.dot.gov* and follow the instructions for sending your comments electronically.
- Government-wide rulemaking Web site: Go to *http://www.regulations.gov* and follow the instructions for sending your comments electronically.
- Mail: Docket Management Facility, U.S. Department of Transportation, 400 Seventh Street, SW., Nassif Building, room PL–401, Washington, DC 20590.
- Fax: (202) 493–2251.
- Hand Delivery: Room PL–401 on the plaza level of the Nassif Building, 400 Seventh Street, SW., Washington, DC, between 9 a.m. and 5 p.m., Monday through Friday, except Federal holidays.

Contact Boeing Commercial Airplanes, P.O. Box 3707, Seattle, Washington 98124–2207, for the service information identified in this proposed AD.

FOR FURTHER INFORMATION CONTACT: Candice Gerretsen, Aerospace Engineer, Airframe Branch, ANM–120S, FAA, Seattle Aircraft Certification Office, 1601 Lind Avenue, SW., Renton, Washington 98055–4056; telephone (425) 917–6428; fax (425) 917–6590.

SUPPLEMENTARY INFORMATION:

Comments Invited

We invite you to submit any relevant written data, views, or arguments regarding this proposed AD. Send your comments to an address listed in the **ADDRESSES** section. Include the docket number ''FAA–2006–23762; Directorate Identifier 2005–NM–226–AD'' at the beginning of your comments. We specifically invite comments on the overall regulatory, economic, environmental, and energy aspects of the proposed AD. We will consider all comments received by the closing date and may amend the proposed AD in light of those comments.

We will post all comments we receive, without change, to *http://dms.dot.gov,* including any personal information you provide. We will also post a report summarizing each substantive verbal contact with FAA personnel concerning this proposed AD. Using the search function of that Web site, anyone can find and read the comments in any of our dockets, including the name of the individual who sent the comment (or signed the comment on behalf of an association, business, labor union, etc.). You may review DOT's complete Privacy Act Statement in the **Federal Register** published on April 11, 2000 (65 FR 19477–78), or you may visit *http://dms.dot.gov.*

Examining the Docket

You may examine the AD docket on the Internet at *http://dms.dot.gov,* or in person at the Docket Management Facility office between 9 a.m. and 5 p.m., Monday through Friday, except Federal holidays. The Docket Management Facility office (telephone (800) 647–5227) is located on the plaza level of the Nassif Building at the DOT street address stated in the **ADDRESSES** section. Comments will be available in the AD docket shortly after the Docket Management System receives them.

Discussion

We have received several reports indicating that cracking has been found in the skin panel common to stringer 7R and aft of the station (STA) 1725.5 butt splice, and in the bulkhead outer chord strap at STA 1725.5, on several Boeing Model 767 airplanes. The cracking in the skin panel was found on airplanes that had accumulated between 13,342 and 35,641 total flight cycles. Similar cracking was found during fatigue tests of Model 767 airplanes. The cracking in the bulkhead outer chord strap originated at a fastener hole above stringer 7R in the same area where the skin cracking was found. Cracking in these areas, if not corrected, could progress into surrounding areas and result in reduced structural integrity of the support structure for the vertical or horizontal stabilizer and subsequent loss of control of the airplane.

Relevant Service Information

We have reviewed Boeing Special Attention Service Bulletin 767–53–0118, dated September 8, 2005. The service bulletin describes procedures for the following repetitive inspections for cracking:

- Part 1: Detailed external inspections of the skin aft of STA 1725.5, between stringers 6R and 8R.
- Part 2: Detailed inspections of the bulkhead outer chord and the strap of the bulkhead outer chord, and surface high frequency eddy current (HFEC) inspections of the strap of the bulkhead outer chord at STA 1725.5.

The service bulletin refers to the structural repair manual (SRM) for procedures for repairing any crack found in the skin or the strap of the bulkhead outer chord. If cracking is found in the bulkhead outer chord, the service bulletin specifies to contact Boeing for repair procedures. The service bulletin specifies that repairing per a certain procedure in the SRM eliminates the need to continue the Part 1 inspections. The service bulletin also specifies that repairing per certain other procedures in the SRM eliminates the need to continue the Part 1 and Part 2 inspections.

The service bulletin specifies a compliance time of 15,000 total flight cycles or 3,000 flight cycles after the original issue date on the service bulletin for performing the initial Part 1 and Part 2 inspections. The service bulletin specifies a repetitive interval not to exceed 6,000 flight cycles for the Part 1 and Part 2 inspections. Any cracking must be repaired before further flight.

Accomplishing the actions specified in the service information is intended to adequately address the unsafe condition.

FAA's Determination and Requirements of the Proposed AD

We have evaluated all pertinent information and identified an unsafe condition that is likely to exist or develop on other airplanes of this same type design. For this reason, we are proposing this AD, which would require accomplishing the actions specified in the service information described previously, except as discussed under ''Differences Between the Proposed AD and Service Information.''

Differences Between the Proposed AD and Service Information

The service bulletin specifies to contact the manufacturer for instructions on how to repair certain conditions, but this proposed AD would require repairing those conditions in one of the following ways:

- Using a method that we approve; or
- Using data that meet the certification basis of the airplane, and that have been approved by an Authorized Representative for the Boeing Commercial Airplanes Delegation Option Authorization Organization whom we have authorized to make those findings.

The service bulletin specifies compliance times relative to the date of issuance of the service bulletin; however, this proposed AD would require compliance before the specified compliance time after the effective date of this AD.

These differences have been coordinated with Boeing.

Costs of Compliance

There are about 905 airplanes of the affected design in the worldwide fleet. The following table provides the estimated costs for U.S. operators to comply with this proposed AD.

ESTIMATED COSTS

Action	Work hours	Average labor rate per hour	Cost per airplane	Number of U.S.-registered airplanes	Fleet cost
Part 1 Inspection, per inspection cycle.	5	$65	$325, per inspection cycle	387	$125,775, per inspection cycle.
Part 2 Inspections, per inspection cycle.	9	65	$585, per inspection cycle	387	$226,395, per inspection cycle.

Authority for This Rulemaking

Title 49 of the United States Code specifies the FAA's authority to issue rules on aviation safety. Subtitle I, Section 106, describes the authority of the FAA Administrator. Subtitle VII, Aviation Programs, describes in more detail the scope of the Agency's authority.

We are issuing this rulemaking under the authority described in Subtitle VII, Part A, Subpart III, Section 44701, ''General requirements.'' Under that section, Congress charges the FAA with promoting safe flight of civil aircraft in air commerce by prescribing regulations for practices, methods, and procedures the Administrator finds necessary for safety in air commerce. This regulation is within the scope of that authority because it addresses an unsafe condition that is likely to exist or develop on products identified in this rulemaking action.

Regulatory Findings

We have determined that this proposed AD would not have federalism implications under Executive Order 13132. This proposed AD would not have a substantial direct effect on the States, on the relationship between the national Government and the States, or on the distribution of power and responsibilities among the various levels of government.

For the reasons discussed above, I certify that the proposed regulation:

1. Is not a ''significant regulatory action'' under Executive Order 12866;

2. Is not a ''significant rule'' under the DOT Regulatory Policies and Procedures (44 FR 11034, February 26, 1979); and

3. Will not have a significant economic impact, positive or negative, on a substantial number of small entities under the criteria of the Regulatory Flexibility Act.

We prepared a regulatory evaluation of the estimated costs to comply with this proposed AD and placed it in the AD docket. See the **ADDRESSES** section for a location to examine the regulatory evaluation.

List of Subjects in 14 CFR Part 39

Air transportation, Aircraft, Aviation safety, Safety.

The Proposed Amendment

Accordingly, under the authority delegated to me by the Administrator, the FAA proposes to amend 14 CFR part 39 as follows:

PART 39—AIRWORTHINESS DIRECTIVES

1. The authority citation for part 39 continues to read as follows:

Authority: 49 U.S.C. 106(g), 40113, 44701.

§ 39.13 [Amended]

2. The Federal Aviation Administration (FAA) amends § 39.13 by adding the following new airworthiness directive (AD):

Boeing: Docket No. FAA–2006–23762; Directorate Identifier 2005–NM–226–AD.

Comments Due Date

(a) The FAA must receive comments on this AD action by March 20, 2006.

Affected ADs

(b) None.

Applicability

(c) This AD applies to all Boeing Model 767–200, –300, –300F, and –400ER series airplanes, certificated in any category.

Unsafe Condition

(d) This AD results from reports of cracking in the skin panel common to stringer 7R and aft of the station (STA) 1725.5 butt splice, and in the strap of the bulkhead outer chord at STA 1725.5. We are issuing this AD to detect and correct cracking in the skin, the bulkhead outer chord, or the strap of the bulkhead outer chord in this area, which could progress into surrounding areas and result in reduced structural integrity of the support structure for the vertical or horizontal stabilizer and subsequent loss of control of the airplane.

Compliance

(e) You are responsible for having the actions required by this AD performed within the compliance times specified, unless the actions have already been done.

Repetitive Inspections

(f) Perform repetitive detailed and high frequency eddy current inspections for cracking in the skin, the bulkhead outer chord, and the strap of the bulkhead outer chord at STA 1725.5, in accordance with the Accomplishment Instructions of Boeing Special Attention Service Bulletin 767–53–0118, dated September 8, 2005. Do the initial and repetitive Part I and Part 2 inspections at the times specified in paragraph 1.E., Compliance, of the service bulletin; except, where the service bulletin specifies a compliance time after the issuance of the service bulletin, this AD requires compliance within the specified compliance time after the effective date of this AD.

Repair

(g) If any cracking is found during any inspection required by paragraph (f) of this AD: Before further flight, perform applicable repairs in accordance with the Accomplishment Instructions of Boeing Special Attention Service Bulletin 767–53–0118, dated September 8, 2005; except, where the service bulletin specifies to contact Boeing for repair instructions, before further flight, repair the cracking using a method approved in accordance with the procedures specified in paragraph (i) of this AD.

Optional Terminating Action

(h) Completing repairs specified in the Accomplishment Instructions of the service bulletin terminates repetitive inspections required by paragraph (f) of this AD as specified in paragraphs (h)(1) and (h)(2) of this AD.

(1) Completing repairs specified in paragraph 3.B.3.a. of the service bulletin terminates both the Part 1 and Part 2 inspections required by paragraph (f) of this AD.

(2) Completing repairs specified in paragraph 3.B.4.a. of the service bulletin terminates the Part 1 inspections required by paragraph (f) of this AD. Part 2 inspections must continue as required by paragraph (f) of this AD until the repairs specified in paragraph 3.B.3.a. of the service bulletin are completed.

Alternative Methods of Compliance (AMOCs)

(i)(1) The Manager, Seattle Aircraft Certification Office (ACO), FAA, has the authority to approve AMOCs for this AD, if requested in accordance with the procedures found in 14 CFR 39.19.

(2) Before using any AMOC approved in accordance with § 39.19 on any airplane to which the AMOC applies, notify the appropriate principal inspector in the FAA Flight Standards Certificate Holding District Office.

(3) An AMOC that provides an acceptable level of safety may be used for any repair required by this AD, if it is approved by an Authorized Representative for the Boeing Commercial Airplanes Delegation Option Authorization Organization who has been authorized by the Manager, Seattle ACO, to make those findings. For a repair method to be approved, the repair must meet the certification basis of the airplane, and the approval must specifically refer to this AD.

Issued in Renton, Washington, on January 26, 2006.

Ali Bahrami,

Manager, Transport Airplane Directorate, Aircraft Certification Service.

[FR Doc. E6–1419 Filed 2–1–06; 8:45 am]

BILLING CODE 4910–13–P

DEPARTMENT OF TRANSPORTATION

Federal Aviation Administration

14 CFR Part 39

[Docket No. FAA–2006–23739; Directorate Identifier 2005–NM–240–AD]

RIN 2120–AA64

Airworthiness Directives; Empresa Brasileira de Aeronautica S.A. (EMBRAER) Model EMB–145, –145ER, –145MR, –145LR, –145XR, –145MP, and –145EP Airplanes

AGENCY: Federal Aviation Administration (FAA), Department of Transportation (DOT).

ACTION: Notice of proposed rulemaking (NPRM).

SUMMARY: The FAA proposes to adopt a new airworthiness directive (AD) for certain EMBRAER Model EMB–145, –145ER, –145MR, –145LR, –145XR, –145MP, and –145EP airplanes. This proposed AD would require modifying the routing of wire harness W407 near the fire extinguishing tube in the area of each engine, and installing new supports for related wiring. This proposed AD results from reports of chafing of wire harness W407 against the supports and nacelle structure in the engine area. We are proposing this AD to prevent such chafing, which could result in an engine shutting down during flight.

DATES: We must receive comments on this proposed AD by March 6, 2006.

ADDRESSES: Use one of the following addresses to submit comments on this proposed AD.

- DOT Docket Web site: Go to *http://dms.dot.gov* and follow the instructions for sending your comments electronically.
- Government-wide rulemaking Web site: *Go to http://www.regulations.gov* and follow the instructions for sending your comments electronically.
- Mail: Docket Management Facility, U.S. Department of Transportation, 400 Seventh Street SW., Nassif Building, room PL–401, Washington, DC 20590.
- Fax: (202) 493–2251.
- Hand Delivery: Room PL–401 on the plaza level of the Nassif Building, 400 Seventh Street, SW., Washington, DC, between 9 a.m. and 5 p.m., Monday through Friday, except Federal holidays.

Contact Empresa Brasileira de Aeronautica S.A. (EMBRAER), P.O. Box 343—CEP 12.225, Sao Jose dos Campos—SP, Brazil, for service information identified in this proposed AD.

FOR FURTHER INFORMATION CONTACT: Todd Thompson, Aerospace Engineer, International Branch, ANM–116, FAA, Transport Airplane Directorate, 1601 Lind Avenue, SW., Renton, Washington 98055–4056; telephone (425) 227–1175; fax (425) 227–1149.

SUPPLEMENTARY INFORMATION:

Comments Invited

We invite you to submit any relevant written data, views, or arguments regarding this proposed AD. Send your comments to an address listed in the **ADDRESSES** section. Include the docket number ''FAA–2006–23739; Directorate Identifier 2005–NM–240–AD'' at the beginning of your comments. We specifically invite comments on the overall regulatory, economic, environmental, and energy aspects of the proposed AD. We will consider all comments received by the closing date and may amend the proposed AD in light of those comments.

We will post all comments we receive, without change, to *http://dms.dot.gov,* including any personal information you provide. We will also post a report summarizing each substantive verbal contact with FAA personnel concerning this proposed AD. Using the search function of that web site, anyone can find and read the comments in any of our dockets, including the name of the individual who sent the comment (or signed the comment on behalf of an association, business, labor union, etc.). You may review the DOT's complete Privacy Act Statement in the **Federal Register** published on April 11, 2000 (65 FR 19477–78), or you may visit *http://dms.dot.gov.*

Examining the Docket

You may examine the AD docket on the Internet at *http://dms.dot.gov*, or in person at the Docket Management Facility office between 9 a.m. and 5 p.m., Monday through Friday, except Federal holidays. The Docket Management Facility office (telephone (800) 647–5227) is located on the plaza level of the Nassif Building at the DOT street address stated in the **ADDRESSES** section. Comments will be available in the AD docket shortly after the Docket Management System receives them.

Discussion

The Departmento de Aviacao Civil (DAC), which is the airworthiness authority for Brazil, notified us that an unsafe condition may exist on certain EMBRAER Model EMB–145, –145ER, –145MR, –145LR, –145XR, –145MP, and –145EP airplanes. The DAC advises that it has received reports of chafing of wire harness W407 against the supports and nacelle structure in the engine area. This condition, if not corrected, could result in an engine shutting down during flight.

Relevant Service Information

EMBRAER has issued Service Bulletin 145–71–0008, Change 01, dated July 24, 2001. The service bulletin describes procedures for modifying the routing of wire harness W407 near the fire extinguishing tube in the rear part of the left-hand and right-hand engines, and installing new supports for derivations of wire harness W407 that lead to certain connectors. Accomplishing the actions specified in the service information is intended to adequately address the unsafe condition. The DAC mandated the service information and issued Brazilian airworthiness directive 2005–10–05, dated November 17, 2005, to ensure the continued airworthiness of these airplanes in Brazil.

FAA's Determination and Requirements of the Proposed AD

These airplane models are manufactured in Brazil and are type certificated for operation in the United States under the provisions of § 21.29 of the Federal Aviation Regulations (14 CFR 21.29) and the applicable bilateral airworthiness agreement. Pursuant to this bilateral airworthiness agreement, the DAC has kept the FAA informed of the situation described above. We have examined the DAC's findings, evaluated all pertinent information, and determined that we need to issue an AD for airplanes of this type design that are certificated for operation in the United States.

Therefore, we are proposing this AD, which would require accomplishing the actions specified in the service information described previously.

Costs of Compliance

This proposed AD would affect about 126 airplanes of U.S. registry. The proposed actions would take up to 3 work hours per airplane, at an average labor rate of $65 per work hour. Required parts would be provided at no charge. Based on these figures, the estimated cost of the proposed AD for U.S. operators is $24,570, or $195 per airplane.

Authority for This Rulemaking

Title 49 of the United States Code specifies the FAA's authority to issue rules on aviation safety. Subtitle I, Section 106, describes the authority of the FAA Administrator. Subtitle VII, Aviation Programs, describes in more detail the scope of the Agency's authority.

We are issuing this rulemaking under the authority described in Subtitle VII, Part A, Subpart III, section 44701, ''General requirements.'' Under that section, Congress charges the FAA with promoting safe flight of civil aircraft in air commerce by prescribing regulations for practices, methods, and procedures the Administrator finds necessary for safety in air commerce. This regulation is within the scope of that authority because it addresses an unsafe condition that is likely to exist or develop on products identified in this rulemaking action.

Regulatory Findings

We have determined that this proposed AD would not have federalism implications under Executive Order 13132. This proposed AD would not have a substantial direct effect on the States, on the relationship between the national Government and the States, or on the distribution of power and responsibilities among the various levels of government.

For the reasons discussed above, I certify that the proposed regulation:

1. Is not a ''significant regulatory action'' under Executive Order 12866;

2. Is not a ''significant rule'' under the DOT Regulatory Policies and Procedures (44 FR 11034, February 26, 1979); and

3. Will not have a significant economic impact, positive or negative, on a substantial number of small entities under the criteria of the Regulatory Flexibility Act.

We prepared a regulatory evaluation of the estimated costs to comply with this proposed AD and placed it in the AD docket. See the **ADDRESSES** section for a location to examine the regulatory evaluation.

List of Subjects in 14 CFR Part 39

Air transportation, Aircraft, Aviation safety, Safety.

The Proposed Amendment

Accordingly, under the authority delegated to me by the Administrator, the FAA proposes to amend 14 CFR part 39 as follows:

PART 39—AIRWORTHINESS DIRECTIVES

1. The authority citation for part 39 continues to read as follows:

Authority: 49 U.S.C. 106(g), 40113, 44701.

§ 39.13 [Amended]

2. The Federal Aviation Administration (FAA) amends § 39.13 by adding the following new airworthiness directive (AD):

Empresa Brasileira de Aeronautica S.A. (EMBRAER): Docket No. FAA–2006–23739; Directorate Identifier 2005–NM–240–AD.

Comments Due Date

(a) The FAA must receive comments on this AD action by March 6, 2006.

Affected ADs

(b) None.

Applicability

(c) This AD applies to EMBRAER Model EMB–145, –145ER, –145MR, –145LR, –145XR, –145MP, and –145EP airplanes, certificated in any category; serial numbers 145004 through 145129 inclusive.

Unsafe Condition

(d) This AD results from reports of chafing of wire harness W407 against the supports and nacelle structure in the engine area. We are issuing this AD to prevent such chafing, which could result in an engine shutting down during flight.

Compliance

(e) You are responsible for having the actions required by this AD performed within the compliance times specified, unless the actions have already been done.

Modifying Wire Harness Routing and Installing Supports

(f) Within 5,000 flight hours after the effective date of this AD, modify the routing of wire harness W407 near the fire extinguishing tube in the rear part of the left-hand and right-hand engines, and install new supports for derivations of wire harness W407 that lead to applicable connectors, in accordance with the Accomplishment Instructions of EMBRAER Service Bulletin 145–71–0008, Change 01, dated July 24, 2001.

Actions Accomplished Previously

(g) Actions done before the effective date of this AD in accordance with EMBRAER Service Bulletin 145–71–0008, dated April 23, 1999, are acceptable for compliance with the requirements of paragraph (f) of this AD.

Alternative Methods of Compliance (AMOCs)

(h)(1) The Manager, International Branch, ANM–116, Transport Airplane Directorate, FAA, has the authority to approve AMOCs for this AD, if requested in accordance with the procedures found in 14 CFR 39.19.

(2) Before using any AMOC approved in accordance with § 39.19 on any airplane to which the AMOC applies, notify the appropriate principal inspector in the FAA Flight Standards Certificate Holding District Office.

Related Information

(i) Brazilian airworthiness directive 2005–10–05, dated November 17, 2005, also addresses the subject of this AD.

Issued in Renton, Washington, on January 25, 2006.

Ali Bahrami,

Manager, Transport Airplane Directorate, Aircraft Certification Service.

[FR Doc. E6–1420 Filed 2–1–06; 8:45 am]

BILLING CODE 4910–13–P

DEPARTMENT OF STATE

22 CFR Part 62

[Public Notice 5292]

RIN 1400–AC16

Au Pair Exchange Programs

AGENCY: Department of State.

ACTION: Proposed rule with request for comment.

SUMMARY: The Department of State (Department) is proposing the amendment of its existing au pair regulations under the Exchange Visitor Program (J–1 visa) to permit designated au pair sponsors to request a one-time extension of six, nine or 12 months beyond an au pair participant's original 12-month program (the maximum duration of program participation).

DATES: *Comment Dates:* The Department will accept comments from the public up to 60 days from February 2, 2006.

ADDRESSES: You may submit comments, identified by any of the following methods:

E-mail: *jexchanges@state.gov.* You must include the RIN in the subject line of your message.

Mail (paper, disk, or CD–ROM submissions): U.S. Department of State, Office of Exchange Coordination and Designation, SA–44, 301 4th Street, SW., Room 734, Washington, DC 20547. Please include RIN.

Fax: 202–203–5087. Please include RIN.

Persons with access to the Internet may also view this notice and provide comments by going to the

regulations.gov Web site at: *http://www.regulations.gov/index.cfm.*

FOR FURTHER INFORMATION CONTACT: Stanley S. Colvin, Director, Office of Exchange Coordination and Designation, U.S. Department of State, SA–44, 301 4th Street, SW., Room 734, Washington, DC 20547; or e-mail at *jexchanges@state.gov.*

SUPPLEMENTARY INFORMATION: In February 2004, the Department of State, in response to requests from the au pair community, announced a pilot program in which the Department's designated au pair sponsors could request that an au pair participant be granted an extension of program participation beyond the original 12-month maximum duration of program participation. The Department has completed its review of the Au Pair Pilot Extension Program and has determined that au pair extensions enhance the overall success of this program. Both host families and au pair participants have enthusiastically embraced the extension concept. Accordingly, the Department is proposing the amendment of program regulations to permit designated sponsors of the au pair program to submit requests to the Department for consideration of program extensions for six, nine, or 12 month durations for first-year au pair participants beyond the maximum duration of participation allowed under § 62.31(c)(1).

Regulatory Analysis and Notices

Administrative Procedure Act

The Department is publishing this rule as a proposed rule, with a 60-day provision for public comments, in accordance with 5 U.S.C. 553.

Regulatory Flexibility Act/Executive Order 13272: Small Business

These proposed changes to the regulations are hereby certified as not expected to have a significant economic impact on a substantial number of small entities under the criteria of the Regulatory Flexibility Act, 5 U.S.C. 601–612, and Executive Order 13272, section 3(b).

Unfunded Mandates Reform Act of 1995

This rule will not result in the expenditure by State, local and tribal governments, in the aggregate, or by the private sector, of $100 million in any year and it will not significantly or uniquely affect small governments. Therefore, no actions were deemed necessary under the provisions of the Unfunded Mandates Reform Act of 1995.

Small Business Regulatory Enforcement Fairness Act of 1996

This rule is not a major rule as defined by 5 U.S.C. 804 for the purposes of Congressional review of agency rulemaking under the Small Business Regulatory Enforcement Fairness Act of 1996 (5 U.S.C. 801–808). This rule will not result in an annual effect on the economy of $100 million or more; a major increase in costs or prices; or significant adverse effects on competition, employment, investment, productivity, innovation, or on the ability of United States-based companies to compete with foreign-based companies in domestic and export markets.

Executive Order 12866

The Department of State does not consider this rule to be a ''significant regulatory action'' under Executive Order 12866, section 3(f), Regulatory Planning and Review. In addition, the Department is exempt from Executive Order 12866 except to the extent that it is promulgating regulations in conjunction with a domestic agency that are significant regulatory actions. The Department has nevertheless reviewed the regulation to ensure its consistency with the regulatory philosophy and principles set forth in that Executive Order.

Executive Order 12988

The Department has reviewed this regulation in light of sections 3(a) and 3(b)(2) of Executive Order 12988 to eliminate ambiguity, minimize litigation, establish clear legal standards, and reduce burden.

Executive Orders 12372 and 13132

This regulation will not have substantial direct effects on the States, on the relationship between the national government and the States, or on the distribution of power and responsibilities among the various levels of government. Therefore, in accordance with section 6 of Executive Order 13132, it is determined that this rule does not have sufficient federalism implications to require consultations or warrant the preparation of a federalism summary impact statement. The regulations implementing Executive Order 12372 regarding intergovernmental consultation on Federal programs and activities do not apply to this regulation.

Paperwork Reduction Act

This rule does not impose any new reporting or record-keeping requirements subject to the Paperwork Reduction Act, 44 U.S.C. Chapter 35.

List of Subjects in 22 CFR Part 62

Cultural Exchange Programs.

Accordingly, 22 CFR Part 62 is proposed to be amended as follows:

PART 62—EXCHANGE VISITOR PROGRAM

1. The authority citation for Part 62 continues to read as follows:

Authority: 8 U.S.C. 1101(a)(15)(J), 1182, 1184, 1258; 22 U.S.C. 1431–1442, 2451–2460; Foreign Affairs Reform and Restructuring Act of 1998, Public Law 105–277, 112 Stat. 2681 *et seq.*; Reorganization Plan No. 2 of 1977, 3 CFR, 1977 Comp. p.200; E.O.12048 of March 27, 1978; 3 CFR, 1978 Comp. p. 168.

§ 62.31 [Amended]

2. Section 62.31 is amended by revising paragraph (k) and adding paragraphs (o) and (p) to read as follows:

* * * * *

(k) *Educational component.* Sponsors shall:

(1) Require that during their initial period of program participation, all EduCare au pair participants complete not less than 12 semester hours (or their equivalent) of academic credit in formal educational settings at accredited U.S. post-secondary institutions and that all other au pair participants complete not less than six semester hours (or their equivalent) of academic credit in formal educational settings at accredited U.S. post-secondary institutions. As a condition of program participation, host family participants must agree to facilitate the enrollment and attendance of au pairs in accredited U.S. post secondary institutions and to pay the cost of such academic course work in an amount not to exceed $1,000 for EduCare au pair participants and in an amount not to exceed $500 for all other au pair participants.

(2) Require that during any extension of program participation, all participants (i.e., Au Pair or EduCare) satisfy an additional educational requirement, as follows:

(i) For a nine or 12-month extension, all au pair participants and host families shall have the same obligation for coursework and payment therefore as is required during the initial period of program participation.

(ii) For a six-month extension, EduCare au pair participants must complete not less than six semester hours (or their equivalent) of academic credit in formal educational settings at accredited U.S. post-secondary institutions. As a condition of participation, host family participants must agree to facilitate the enrollment and attendance of au pairs in accredited

U.S. post secondary institutions and to pay the cost of such academic coursework in an amount not to exceed $500. All other au pair participants must complete not less than three semester hours (or their equivalent) of academic credit in formal educational settings at accredited U.S. post-secondary institutions. As a condition of program participation, host family participants must agree to facilitate the enrollment and attendance of au pairs in accredited U.S. post secondary institutions and to pay the cost of such academic coursework in an amount not to exceed $250.

* * * * *

(o) *Extension of Program.* The Department, in its sole discretion, may approve extensions for au pair participants beyond the initial 12-month program. Applications to the Department for extensions of six, nine or 12 months, must be received by the Department not less than 30 calendar days prior to the expiration of the exchange visitor's initial authorized stay in either the Au Pair or EduCare program (i.e., 30-calendar days prior to the program end date listed on the exchange visitor's SEVIS record, Form DS–2019). The request for an extension beyond the maximum duration of the initial 12-month program must be submitted electronically in the Department of Homeland Security's Student and Exchange Visitor Information System (SEVIS). Supporting documentation must be submitted to the Department of State on the sponsor's organizational letterhead and contain the following information:

(1) Au pair's name, SEVIS identification number, date of birth, the length of the extension period being requested;

(2) Verification that the au pair completed the educational requirements of the initial program; and

(3) Payment of the required non-refundable fee (see 22 CFR 62.90) via Pay.gov.

(p) *Repeat Participation.* Exchange visitors who have participated in the Au Pair Program shall not be eligible for repeat participation.

Dated: January 24, 2006.

Stanley S. Colvin,

Director, Office of Exchange Coordination and Designation, Bureau of Educational and Cultural Affairs, Department of State.

[FR Doc. E6–1413 Filed 2–1–06; 8:45 am]

BILLING CODE 4710–05–P

DEPARTMENT OF THE TREASURY

Alcohol and Tobacco Tax and Trade Bureau

27 CFR Parts 19, 24, 25, 26 and 70

[Notice No. 56]

RIN 1513–AB17

Quarterly Excise Tax Filing for Small Alcohol Excise Taxpayers (2005R–441P)

AGENCY: Alcohol and Tobacco Tax and Trade Bureau, Treasury.

ACTION: Notice of proposed rulemaking; cross-reference to temporary rule.

SUMMARY: Elsewhere in this issue of the **Federal Register**, the Alcohol and Tobacco Tax and Trade Bureau is issuing a temporary rule implementing the quarterly excise tax payment procedure contained in section 5061 of the Internal Revenue Code of 1986 as amended by section 11127 of the Safe, Accountable, Flexible, Efficient Transportation Equity Act: A Legacy for Users. In this notice of proposed rulemaking, we are soliciting comments from all interested parties on the regulatory amendments to implement this new payment period. The text of the regulations in the temporary rule published in the Rules and Regulations section of this issue of the **Federal Register** serves as the text of the proposed regulations.

DATES: Comments must be received on or before April 3, 2006.

ADDRESSES: You may send comments to any of the following addresses:

- Director, Regulations and Procedures Division, Alcohol and Tobacco Tax and Trade Bureau, Attn: Notice No. 56, P.O. Box 14412, Washington, DC 20044–4412.
- 202–927–8525 (facsimile).
- *nprm@ttb.gov* (e-mail).
- *http://www.ttb.gov/alcohol/rules/index.htm.* An online comment form is posted with this notice on our Web site.
- *http://www.regulations.gov.* Federal e-rulemaking portal; follow instructions for submitting comments.

You may view copies of any comments we receive about this notice by appointment at the TTB Information Resource Center, 1310 G Street, NW., Washington, DC 20220. To make an appointment, call 202–927–2400. You may also access copies of this notice and any comments online at *http://www.ttb.gov/alcohol/rules/index.htm.*

See the Public Participation section of this document for specific instructions and requirements for submitting comments, and for information on how to request a public hearing.

FOR FURTHER INFORMATION CONTACT: For questions concerning quarterly filing procedures, contact James S. McCoy, National Revenue Center, Alcohol and Tobacco Tax and Trade Bureau (513–684–2120); for other questions concerning this document, contact Marjorie Ruhf, Regulations and Rulings Division, Alcohol and Tobacco Tax and Trade Bureau (202–927–8202 or *marjorie.ruhf@ttb.gov*).

SUPPLEMENTARY INFORMATION:

Background

In the Rules and Regulations section of this issue of the **Federal Register**, we are publishing a temporary rule setting forth regulatory amendments to implement section 11127 of the Safe, Accountable, Flexible, Efficient Transportation Equity Act: A Legacy for Users, Public Law 109–59, 119 Stat. 1144 (''the Act''), signed by President Bush on August 10, 2005. Section 11127 of the Act amended section 5061(d) of the Internal Revenue Code of 1986 (IRC), 26 U.S.C. 5061, to allow certain alcohol excise taxpayers to pay taxes quarterly rather than semimonthly. The Alcohol and Tobacco Tax and Trade Bureau (TTB) is responsible for the administration of the IRC provisions relating to alcohol excise taxes on products removed from domestic production facilities and brought to the United States from Puerto Rico.

The amendment made by section 11127 of the Act applies to ''any taxpayer who reasonably expects to be liable for not more than $50,000 in taxes * * * for the calendar year and who was liable for not more than $50,000 in such taxes in the preceding calendar year.'' In such a case the taxpayer must pay the tax no later than the 14th day after the last day of the calendar quarter during which the action giving rise to the tax (that is, withdrawal, removal, entry, and bringing in from Puerto Rico) occurs. The amended statute also provides that the quarterly tax payment procedure does not apply to a taxpayer for any remaining portion of the calendar year following the date on which the aggregate amount of tax due from the taxpayer exceeds $50,000. If at any point during the year the taxpayer's liability exceeds $50,000, any tax that has not been paid on that date becomes due on the 14th day after the last day of the semimonthly period in which that date falls. Thus, in effect, a taxpayer whose tax payments exceed the $50,000 limit during the calendar year is required to revert to the semimonthly payment procedure for the remainder of the year.

The temporary regulations published elsewhere in this issue of the **Federal Register** involve amendments to parts 19, 24, 25, 26, and 70 of the TTB regulations (27 CFR parts 19, 24, 25, 26, and 70). The text of the temporary regulations serves as the text of these proposed regulations. The preamble to the temporary regulations explains the proposed regulations.

Public Participation

Comments Sought

We invite comments from everyone interested. All comments must reference Notice No. 56 and must include your name and mailing address. They must be legible and written in language acceptable for public disclosure. Although we do not acknowledge receipt, we will consider your comments if we receive them on or before the closing date. We regard all comments as originals.

Confidentiality

All comments are part of the public record and subject to disclosure. Do not enclose any material in your comments that you consider confidential or inappropriate for public disclosure.

Submitting Comments

You may submit comments in any of five ways:

- *Mail:* You may send written comments to TTB at the address listed in the **ADDRESSES** section of this document.
- *Facsimile:* You may submit comments by facsimile transmission to 202–927–8525. Faxed comments must:

(1) Be on 8.5- by 11-inch paper;

(2) Contain a legible, written signature; and

(3) Be no more than five pages long. This limitation ensures electronic access to our equipment. We will not accept faxed comments that exceed five pages.

- *E-mail:* You may e-mail comments to *nprm@ttb.gov*. Comments transmitted by electronic mail must:

(1) Contain your e-mail address;

(2) Reference Notice No. 56 on the subject line; and

(3) Be legible when printed on 8.5- by 11-inch paper.

- *Online form:* We provide a comment form with the online copy of this document on our Web site at *http://www.ttb.gov/alcohol/rules/index.htm*. Select the ''Send comments via e-mail'' link under Notice No. 56.
- *Federal e-Rulemaking Portal:* To submit comments to us via the Federal e-rulemaking portal, visit *http://www.regulations.gov* and follow the instructions for submitting comments.

You may also write to the Administrator before the comment closing date to ask for a public hearing. The Administrator reserves the right to determine, in light of all circumstances, whether to hold a public hearing.

Public Disclosure

You may view copies of the temporary rule, this document, and any comments we receive by appointment at the TTB Information Center at 1310 G Street, NW., Washington, DC 20220. You may also obtain copies at 20 cents per 8.5- x 11-inch page. Contact the TTB information specialist at the above address or telephone 202–927–2400 to schedule an appointment or to request copies of comments.

For your convenience, we will post the temporary rule, this document, and any comments we receive on the TTB Web site. We may omit voluminous attachments or material that we consider unsuitable for posting. In all cases, the full comment will be available in the TTB Information Center. To access the online copy of this document and the submitted comments, visit *http://www.ttb.gov/alcohol/rules/index.htm*. Select the ''View Comments'' link under this document's number and title to view the posted comments.

Regulatory Flexibility Act

Although we are issuing this notice of proposed rulemaking, it has been determined that it is not subject to the provisions of 5 U.S.C. 553(b). Because this proposed rule contains no new collections of information, the provisions of the Regulatory Flexibility Act (5 U.S.C. 601 *et seq.*) do not apply. This proposed rule decreases the frequency of existing information collections for some businesses, including some small businesses. Pursuant to section 7805(f) of the Internal Revenue Code of 1986, we will submit this notice of proposed rulemaking to the Chief Counsel for Advocacy of the Small Business Administration for comment on its impact on small businesses.

Executive Order 12866

We have determined that this notice of proposed rulemaking is not a significant regulatory action as defined in Executive Order 12866. Therefore, a regulatory assessment is not required.

Paperwork Reduction Act

Under the Paperwork Reduction Act of 1995, no persons are required to respond to a collection of information unless it displays a valid OMB control number. The collections of information contained in the regulations amended by this temporary rule have been previously reviewed and approved by the Office of Management and Budget in accordance with the Paperwork Reduction Act of 1995 under control numbers 1513–0053, 1513–0083, and 1513–0090. There is a reduction in the reporting or recordkeeping burden under these control numbers resulting from the change from semimonthly to quarterly tax return periods for some small taxpayers. There is no new or revised collection of information imposed by this proposed rule.

Drafting Information

Charles Bacon, Daniel Hiland, and Marjorie Ruhf of the Regulations and Rulings Division, Alcohol and Tobacco Tax and Trade Bureau, drafted this document. However, other personnel participated in its development.

List of Subjects

27 CFR Part 19

Administrative practice and procedures, Caribbean Basin Initiative, Claims, Electronic funds transfers, Excise taxes, Exports, Gasohol, Imports, Labeling, Liquors, Packaging and containers, Puerto Rico, Reporting and recordkeeping requirements, Research, Security measures, Surety bonds, Vinegar, Virgin Islands, Warehouses.

27 CFR Part 24

Administrative practice and procedure, Claims, Electronic fund transfers, Excise taxes, Exports, Food additives, Fruit juices, Labeling, Liquors, Packaging and containers, Reporting and recordkeeping requirements, Research, Scientific equipment, Spices and flavoring, Surety bonds, Vinegar, Warehouses, Wine.

27 CFR Part 25

Administrative practice and procedure, Beer, Claims, Electronic funds transfers, Excise taxes, Exports, Labeling, Packaging and containers, Reporting and recordkeeping requirements, Research, Surety bonds.

27 CFR Part 26

Administrative practice and procedure, Alcohol and alcoholic beverages, Caribbean Basin Initiative, Claims, Customs duties and inspection, Electronic funds transfers, Excise taxes, Packaging and containers, Puerto Rico, Reporting and recordkeeping requirements, Surety bonds, Virgin Islands, Warehouses.

27 CFR Part 70

Administrative practice and procedure, Claims, Excise taxes,

Freedom of information, Law enforcement, Penalties, Reporting and recordkeeping requirements, Surety bonds.

Proposed Amendments to the Regulations

For the reasons discussed in the preamble, TTB proposes to amend 27 CFR parts 19, 24, 25, 26, and 70 as follows:

PART 19—DISTILLED SPIRITS PLANTS

1. The authority citation for part 19 continues to read as follows:

Authority: 19 U.S.C. 81c, 1311; 26 U.S.C. 5001, 5002, 5004–5006, 5008, 5010, 5041, 5061, 5062, 5066, 5081, 5101, 5111–5113, 5142, 5143, 5146, 5148, 5171–5173, 5175, 5176, 5178–5181, 5201–5204, 5206, 5207, 5211–5215, 5221–5223, 5231, 5232, 5235, 5236, 5241–5243, 5271, 5273, 5301, 5311–5313, 5362, 5370, 5373, 5501–5505, 5551–5555, 5559, 5561, 5562, 5601, 5612, 5682, 6001, 6065, 6109, 6302, 6311, 6676, 6806, 7011, 7510, 7805; 31 U.S.C. 9301, 9303, 9304, 9306.

2. [The proposed amendatory instructions and the proposed amended regulatory text for part 19 are the same as the amendatory instructions and the amended regulatory text set forth in the temporary rule on this subject published in the Rules and Regulations section of this issue of the **Federal Register**.]

PART 24—WINE

3. The authority citation for part 24 continues to read as follows:

Authority: 5 U.S.C. 552(a); 26 U.S.C. 5001, 5008, 5041, 5042, 5044, 5061, 5062, 5081, 5111–5113, 5121, 5122, 5142, 5143, 5148, 5173, 5206, 5214, 5215, 5351, 5353, 5354, 5356, 5357, 5361, 5362, 5364–5373, 5381–5388, 5391, 5392, 5511, 5551, 5552, 5661, 5662, 5684, 6065, 6091, 6109, 6301, 6302, 6311, 6651, 6676, 7011, 7302, 7342, 7502, 7503, 7606, 7805, 7851; 31 U.S.C. 9301, 9303, 9304, 9306.

4. [The proposed amendatory instructions and the proposed amended regulatory text for part 24 are the same as the amendatory instructions and the amended regulatory text set forth in the temporary rule on this subject published in the Rules and Regulations section of this issue of the **Federal Register**.]

PART 25—BEER

5. The authority citation for part 25 continues to read as follows:

Authority: 19 U.S.C. 81c; 26 U.S.C. 5002, 5051–5054, 5056, 5061, 5091, 5111, 5113, 5142, 5143, 5146, 5148, 5222, 5401–5403, 5411–5417, 5551, 5552, 5555, 5556, 5671, 5673, 5684, 6011, 6061, 6065, 6091, 6109, 6151, 6301, 6302, 6311, 6313, 6402, 6651, 6656, 6676, 6806, 7011, 7342, 7606, 7805; 31 U.S.C. 9301, 9303–9308.

6. [The proposed amendatory instructions and the proposed amended regulatory text for part 25 are the same as the amendatory instructions and the amended regulatory text set forth in the temporary rule on this subject published in the Rules and Regulations section of this issue of the **Federal Register**.]

PART 26—LIQUORS AND ARTICLES FROM PUERTO RICO AND THE VIRGIN ISLANDS

7. The authority citation for part 26 continues to read as follows:

Authority: 19 U.S.C. 81c; 26 U.S.C. 5001, 5007, 5008, 5010, 5041, 5051, 5061, 5081, 5111, 5112, 5114, 5121, 5122, 5124, 5131–5134, 5141, 5146, 5148, 5207, 5232, 5271, 5276, 5301, 5314, 5555, 6001, 6301, 6302, 6804, 7101, 7102, 7651, 7652, 7805; 27 U.S.C. 203, 205; 31 U.S.C. 9301, 9303, 9304, 9306.

8. [The proposed amendatory instructions and the proposed amended regulatory text for part 26 are the same as the amendatory instructions and the amended regulatory text set forth in the temporary rule on this subject published in the Rules and Regulations section of this issue of the **Federal Register**.]

PART 70—PROCEDURES AND PRACTICES

9. The authority citation for part 70 continues to read as follows:

Authority: 5 U.S.C. 301 and 552; 26 U.S.C. 4181, 4182, 5146, 5203, 5207, 5275, 5367, 5415, 5504, 5555, 5684(a), 5741, 5761(b), 5802, 6020, 6021, 6064, 6102, 6155, 6159, 6201, 6203, 6204, 6301, 6303, 6311, 6313, 6314, 6321, 6323, 6325, 6326, 6331–6343, 6401–6404, 6407, 6416, 6423, 6501–6503, 6511, 6513, 6514, 6532, 6601, 6602, 6611, 6621, 6622, 6651, 6653, 6656–6658, 6665, 6671, 6672, 6701, 6723, 6801, 6862, 6863, 6901, 7011, 7101, 7102, 7121, 7122, 7207, 7209, 7214, 7304, 7401, 7403, 7406, 7423, 7424, 7425, 7426, 7429, 7430, 7432, 7502, 7503, 7505, 7506, 7513, 7601–7606, 7608–7610, 7622, 7623, 7653, 7805.

10. [The proposed amendatory instructions and the proposed amended regulatory text for part 70 are the same as the amendatory instructions and the amended regulatory text set forth in the temporary rule on this subject published in the Rules and Regulations section of this issue of the **Federal Register**.]

Signed: December 13, 2005.

John J. Manfreda,

Administrator.

Approved: December 23, 2005.

Timothy E. Skud,

Deputy Assistant Secretary (Tax, Trade, and Tariff Policy).

[FR Doc. 06–980 Filed 2–1–06; 8:45 am]

BILLING CODE 4810–31–P

DEPARTMENT OF DEFENSE

Office of the Secretary

32 CFR Part 275

[DOD–2006–OS–0006]

RIN 0790–AH84

Obtaining Information From Financial Institutions

AGENCY: Department of Defense.

ACTION: Proposed rule.

SUMMARY: The Department of Defense is proposing to revise its current policies concerning obtaining information from financial institutions under the Right to Financial Privacy Act of 1978, as amended (12 U.S.C. chapter 35). This part prescribes practices and procedures for the Department of Defense to obtain from a financial institution the financial records of its customers.

DATES: Comments must be received by April 3, 2006.

ADDRESSES: You may submit comments, identified by docket number and or RIN number and title, by any of the following methods:

- *Federal eRulemaking Portal: http://www.regulations.gov.* Follow the instructions for submitting comments.
- *Mail:* Federal Docket Management System Office, 1160 Defense Pentagon, Washington, DC 20301–1160.

Instructions: All submissions received must include the agency name and docket number or Regulatory Information Number (RIN) for this **Federal Register** document. The general policy for comments and other submissions from members of the public is to make these submissions available for public viewing on the Internet at *http://regulations.gov* as they are received without change, including any personal identifiers or contact information.

FOR FURTHER INFORMATION CONTACT: Mr. Vahan Moushegian, Jr., at (703) 607–2943.

SUPPLEMENTARY INFORMATION:

Executive Order 12866, ''Regulatory Planning and Review''

It has been determined that Privacy Act rules for the Department of Defense are not significant rules. The rules do not (1) Have an annual effect on the economy of $100 million or more or adversely affect in a material way the economy; a sector of the economy; productivity; competition; jobs; the environment; public health or safety; or State, local, or tribal governments or communities; (2) Create a serious

inconsistency or otherwise interfere with an action taken or planned by another Agency; (3) Materially alter the budgetary impact of entitlements, grants, user fees, or loan programs, or the rights and obligations of recipients thereof; or (4) Raise novel legal or policy issues arising out of legal mandates, the President's priorities, or the principles set forth in this Executive order.

Public Law 96–354, ''Regulatory Flexibility Act'' (5 U.S.C. Chapter 6)

It has been determined that Privacy Act rules for the Department of Defense do not have significant economic impact on a substantial number of small entities because they are concerned only with the administration of Privacy Act systems of records within the Department of Defense.

Public Law 96–511, ''Paperwork Reduction Act'' (44 U.S.C. Chapter 35)

It has been determined that Privacy Act rules for the Department of Defense impose no information requirements beyond the Department of Defense and that the information collected within the Department of Defense is necessary and consistent with 5 U.S.C. 552a, known as the Privacy Act of 1974.

Section 202, Public Law 104–4, ''Unfunded Mandates Reform Act''

It has been determined that Privacy Act rulemaking for the Department of Defense does not involve a Federal mandate that may result in the expenditure by State, local and tribal governments, in the aggregate, or by the private sector, of $100 million or more and that such rulemaking will not significantly or uniquely affect small governments.

Executive Order 13132, ''Federalism''

It has been determined that Privacy Act rules for the Department of Defense do not have federalism implications. The rules do not have substantial direct effects on the States, on the relationship between the National Government and the States, or on the distribution of power and responsibilities among the various levels of government.

List of Subjects in 32 CFR Part 275

Banks, banking; Credit; Privacy.

Accordingly, 32 CFR part 275 is proposed to be revised as follows:

PART 275—OBTAINING INFORMATION FROM FINANCIAL INSTITUTIONS; RIGHT TO FINANCIAL PRIVACY ACT OF 1978

Sec.

275.1 Purpose.
275.2 Applicability and scope.
275.3 Definitions.
275.4 Policy.
275.5 Responsibilities.
275.6 Obtaining basic identifying account information.
275.7 Obtaining customer authorization.
275.8 Obtaining access by administrative or judicial subpoena or by formal written request.
275.9 Obtaining access by search warrant.
275.10 Obtaining access for foreign intelligence, foreign counterintelligence, and international terrorist activities or investigations.
275.11 Obtaining emergency access.
275.12 Releasing information obtained from financial institutions.
275.13 Procedures for delay of notice.
275.14 Obtaining access to financial records overseas.
Appendix A to Part 275—Format for Obtaining Basic Identifying Account Information
Appendix B to Part 275—Format for Customer Authorization
Appendix C to Part 275—Format for a Formal Written Request
Appendix D to Part 275—Format for Customer Notice for Administrative or Judicial Subpoena or for Formal Written Request
Appendix E to Part 275—Format for Certificate of Compliance with the Right to Financial Privacy Act of 1978

Authority: 12 U.S.C. 3401, *et seq.*

§ 275.1 Purpose.

This part:

(a) Updates policies and responsibilities, and prescribes procedures for obtaining access to financial records maintained by financial institutions.

(b) Implements 12 U.S.C. Chapter 35 by providing guidance on the requirements and conditions for obtaining financial records.

§ 275.2 Applicability and scope.

This part applies to:

(a) The Office of the Secretary of Defense, the Military Departments, the Chairman of the Joint Chiefs of Staff, the Combatant Commands, the Office of the Inspector General of the Department of Defense, the Defense Agencies, the DoD Field Activities, and all other organizational entities in the Department of Defense (hereafter referred to collectively as the ''DoD Components'').

(b) Only to financial records maintained by financial institutions.

§ 275.3 Definitions.

(a) *Administrative Summons or Subpoena.* A statutory writ issued by a Government Authority.

(b) *Customer.* Any person or authorized representative of that person who used or is using any service of a financial institution or for whom a financial institution is acting or has acted as fiduciary for an account maintained in the name of that person.

(c) *Financial Institution (for intelligence activity purposes only).*

(1) An insured bank (includes a foreign bank having an insured branch) whose deposits are insured under the Federal Deposit Insurance Act.

(2) A commercial bank or trust company.

(3) A private banker.

(4) An agency or branch of a foreign bank in the United States.

(5) Any credit union.

(6) A thrift institution.

(7) A broker or dealer registered with the Securities and Exchange Commission.

(8) A broker or dealer in securities or commodities.

(9) An investment banker or investment company.

(10) A currency exchange.

(11) An issuer, redeemer, or cashier of travelers' checks, checks, money orders, or similar instruments.

(12) An operator of a credit card system.

(13) An insurance company.

(14) A dealer in precious metals, stones, or jewels.

(15) A pawnbroker.

(16) A loan or finance company.

(17) A travel agency.

(18) A licensed sender of money or any other person who engages as a business in the transmission of funds, including any person who engages as a business in an informal money transfer system or any network of people who engage as a business in facilitating the transfer of money domestically or internationally outside of the conventional financial institutions system.

(19) A telegraph company.

(20) A business engaged in vehicle sales, including automobile, airplane, and boat sales.

(21) Persons involved in real estate closings and settlements.

(22) The United States Postal Service.

(23) An agency of the United States Government or of a State or local government performing a duty or power of a business described in this definition.

(24) A casino, gambling casino, or gaming establishment with an annual gaming revenue of more than $1,000,000 which is licensed as a casino, gambling casino, or gaming establishment under the laws of a State or locality or is an Indian gaming operation conducted pursuant to, and as authorized by, the Indian Gaming Regulatory Act.

(25) Any business or agency that engages in any activity which the

Secretary of the Treasury, by regulation determines to be an activity in which any business described in this definition is authorized to engage; or any other business designated by the Secretary of the Treasury whose cash transactions have a high degree of usefulness in criminal, tax, or regulatory matters.

(26) Any futures commission merchant, commodity trading advisor, or commodity pool operator registered, or required to register, under the Commodity Exchange Act that is located inside any State or territory of the United States, the District of Columbia, Puerto Rico, Guam, American Samoa, the Commonwealth of the Northern Mariana Islands, or the United States Virgin Islands.

(d) *Financial Institution (other than for intelligence activity purposes).* Any office of a bank, savings bank, credit card issuer, industrial loan company, trust company, savings association, building and loan, or homestead association (including cooperative banks), credit union, or consumer finance institution that is located in any state or territory of the United States, or in the District of Columbia, Puerto Rico, Guam, American Samoa, or the Virgin Islands.

(e) *Financial Record.* An original, its copy, or information known to have been derived from the original record held by a financial institution that pertains to a customer's relationship with the financial institution.

(f) *Government Authority.* Any agency or Department of the United States, or any officer, employee, or agent thereof, to include DoD law enforcement offices, personnel security elements, and/or intelligence organizations.

(g) *Intelligence Activities.* The collection, production, and dissemination of foreign intelligence and counterintelligence, to include investigation or analyses related to international terrorism, by DoD intelligence organizations.

(h) *Intelligence Organizations.* Any element of a DoD Component authorized by the Secretary of Defense to conduct intelligence activities.

(i) *Law Enforcement Inquiry.* A lawful investigation or official proceeding that inquires into a violation of or failure to comply with a criminal or civil statute, or any rule, regulation, or order issued pursuant thereto.

(j) *Law Enforcement Office.* Any element of a DoD Component authorized by the Head of the DoD Component conducting law enforcement inquiries.

(k) *Person.* An individual or a partnership consisting of five or fewer individuals.

(l) *Personnel Security Element.* Any element of a DoD Component authorized by the Secretary of Defense conducting personnel security investigations.

(m) *Personnel Security Investigation.* An investigation required for determining a person's eligibility for access to classified information, acceptance or retention in the Armed Forces, assignment or retention in sensitive duties, or other designated duties requiring such investigation. Personnel security investigations include investigations conducted for the purpose of making personnel security determinations. They also include investigations of allegations that may arise subsequent to favorable adjudicative action and require resolution to determine a person's current eligibility for access to classified information or assignment or retention in a sensitive position.

§ 275.4 Policy.

It is DoD policy that:

(a) Authorization of the customer to whom the financial records pertain shall be sought unless doing so compromises or harmfully delays either a legitimate law enforcement inquiry or a lawful intelligence activity. If the person declines to consent to disclosure, the alternative means of obtaining the records authorized by this part shall be utilized.

(b) The provisions of 12 U.S.C. Chapter 35 do not govern obtaining access to financial records maintained by military banking contractors located outside the United States, the District of Columbia, Guam, American Samoa, Puerto Rico, and the Virgin Islands. The guidance set forth in § 275.14 may be used to obtain financial information from these contractor operated facilities.

§ 275.5 Responsibilities.

(a) The Director of Administration and Management, Office of the Secretary of Defense shall:

(1) Exercise oversight to ensure compliance with this part.

(2) Provide policy guidance to affected DoD Components to implement this part.

(b) The Secretaries of the Military Departments and the Heads of the affected DoD Components shall:

(1) Implement policies and procedures to ensure implementation of this part when seeking access to financial records.

(2) Adhere to the guidance and procedures contained in this part.

§ 275.6 Obtaining basic identifying account information.

(a) A DoD law enforcement office may issue a formal written request for basic identifying account information to a financial institution relevant to a legitimate law enforcement inquiry. A request may be issued to a financial institution for any or all of the following identifying data:

(1) Name.

(2) Address.

(3) Account number.

(4) Type of account of any customer or ascertainable group of customers associated with a financial transaction or class of financial transactions.

(b) The notice (§ 275.8(b)), challenge (§ 275.9(d)), and transfer (§ 275.12(b)) requirements of this part shall not apply when a Government authority is seeking only the above specified basic identifying information concerning a customer's account.

(c) A format for obtaining basic identifying account information is set forth in Appendix A to this part.

§ 275.7 Obtaining customer authorization.

(a) A DoD law enforcement office or personal security element seeking access to a person's financial records shall, when feasible, obtain the customer's consent.

(b) Any authorization obtained under paragraph (a) of this section, shall:

(1) Be in writing, signed, and dated.

(2) Identify the particular financial records that are being disclosed.

(3) State that the customer may revoke the authorization at any time before disclosure.

(4) Specify the purposes for disclosure and to which Governmental authority the records may be disclosed.

(5) Authorize the disclosure for a period not in excess of 3 months.

(6) Contain a ''Statement of Customer Rights'' as required by 12 U.S.C. Chapter 35 (see Appendix B to this part).

(7) Contain a Privacy Act Statement as required by 32 CFR part 310 for a personnel security investigation.

(c) Any customer's authorization not containing all of the elements listed in paragraph (b) of this section, shall be void. A customer authorization form, in a format set forth in Appendix B to this part, shall be used for this purpose.

(d) A copy of the customer's authorization shall be made a part of the law enforcement or personnel security file where the financial records are maintained.

(e) A certificate of compliance stating that the applicable requirements of 12 U.S.C. Chapter 35 have been met (Appendix E to this part), along with the customer's authorization, shall be

provided to the financial institution as a prerequisite to obtaining access to financial records.

§ 275.8 Obtaining access by administrative or judicial subpoena or by formal written request.

(a) Access to information contained in financial records from a financial institution may be obtained by Government authority when the nature of the records is reasonably described and the records are acquired by:

(1) *Administrative Summons or Subpoena.* (i) Within the Department of Defense, the Inspector General, DoD, has the authority under the Inspector General Act to issue administrative subpoenas for access to financial records. No other DoD Component official may issue summons or subpoenas for access to these records.

(ii) The Inspector General, DoD shall issue administrative subpoenas for access to financial records in accordance with established procedures but subject to the procedural requirements of this section.

(2) *Judicial Subpoena.*

(3) *Formal Written Request.*

(i) Formal requests may only be used if an administrative summons or subpoena is not reasonably available to obtain the financial records.

(ii) A formal written request shall be in a format set forth in Appendix C to this part and shall:

(A) State that the request is issued under 12 U.S.C. Chapter 35 and the DoD Component's implementation of this part.

(B) Describe the specific records to be examined.

(C) State that access is sought in connection with a legitimate law enforcement inquiry.

(D) Describe the nature of the inquiry.

(E) Be signed by the head of the law enforcement office or a designee.

(b) A copy of the administrative or judicial subpoena or formal request, along with a notice specifying the nature of the law enforcement inquiry, shall be served on the person or mailed to the person's last known mailing address on or before the subpoena is served on the financial institution unless a delay of notice has been obtained under § 275.13.

(c) The notice to the customer shall be in a format similar to Appendix D to this part and shall be personally served at least 10 days or mailed at least 14 days prior to the date on which access is sought.

(d) The customer shall have 10 days to challenge a notice request when personal service is made and 14 days when service is by mail.

(e) No access to financial records shall be attempted before the expiration of the pertinent time period while awaiting receipt of a potential customer challenge, or prior to the adjudication of any challenge made.

(f) The official who signs the customer notice shall be designated to receive any challenge from the customer.

(g) When a customer fails to file a challenge to access to financial records within the above pertinent time periods, or after a challenge is adjudicated in favor of the law enforcement office, the head of the office, or a designee, shall certify in writing to the financial institution that such office has complied with the requirements of 12 U.S.C. Chapter 35. No access to any financial records shall be made before such certification (Appendix E to this part) is provided the financial institution.

§ 275.9 Obtaining access by search warrant.

(a) A Government authority may obtain financial records by using a search warrant obtained under Rule 41 of the Federal Rules of Criminal Procedure.

(b) Unless a delay of notice has been obtained under provisions of § 275.13, the law enforcement office shall, no later than 90 days after serving the search warrant, mail to the customer's last known address a copy of the search warrant together with the following notice:

> Records or information concerning your transactions held by the financial institution named in the attached search warrant were obtained by this [DoD office or activity] on [date] for the following purpose: [state purpose]. You may have rights under the Right to Financial Privacy Act of 1978.

(c) In any state or territory of the United States, or in the District of Columbia, Puerto Rico, Guam, American Samoa, or the Virgin Islands, search authorizations signed by installation commanders, military judges, or magistrates shall not be used to gain access to financial records.

§ 275.10 Obtaining access for foreign intelligence, foreign counterintelligence, and international terrorist activities or investigations.

(a) Financial records may be obtained from a financial institution (as identified at § 275.3) by an intelligence organization, as identified in DoD Directive 5240.1,[1] authorized to conduct intelligence activities, to include investigation or analyses related to international terrorism, pursuant to DoD Directive 5240.1 and Executive Order 12333.

(b) The provisions of this part do not apply to the production and disclosure of financial records when requests are submitted by intelligence organizations except as may be required by this section.

(c) When a request for financial records is made under paragraph (a) of this section, a Component official designated by the Secretary of Defense, the Secretary of a Military Department, or the Head of the DoD Component authorized to conduct foreign intelligence or foreign counterintelligence activities shall certify to the financial institution that the requesting Component has complied with the provisions of 12 U.S.C. Chapter 35. Such certification in a format similar to § 275.13 to this part shall be made before obtaining any records.

(d) An intelligence organization requesting financial records under paragraph (a) of this section, may notify the financial institution from which records are sought 12 U.S.C. 3414(3) prohibits disclosure to any person by the institution, its agents, or employees that financial records have been sought or obtained. An intelligence organization requesting financial records under paragraph (a) of this section, shall maintain an annual tabulation of the occasions.

(e) An intelligence organization requesting financial records under paragraph (a) of this section, shall maintain an annual tabulation of the occasions in which this access procedure was used.

§ 275.11 Obtaining emergency access.

(a) Except as provided in paragraphs (b) and (c) of this section, nothing in this part shall apply to a request for financial records from a financial institution when a determination is made that a delay in obtaining access to such records would create an imminent danger of:

(1) Physical injury to any person.

(2) Serious property damage.

(3) Flight to avoid prosecution.

(b) When access is made to financial records under paragraph (a) of this section, a Component official designated by the Secretary of Defense or the Secretary of a Military Department shall:

(1) Certify in writing, in a format set forth in Appendix E to this part, to the financial institution that the Component has complied with the provisions of 12 U.S.C. Chapter 35, as a prerequisite to obtaining access.

(2) Submit for filing with the appropriate court a signed sworn statement setting forth the grounds for

[1] Copies may be obtained at *http://www.dtic.mil/whs/directives/.*

the emergency access within 5 days of obtaining access to financial records.

(c)(1) When access to financial records are obtained under paragraph (a) of this section, a copy of the request, along with the following notice, shall be served on the person or mailed to the person's last known mailing address as soon as practicable after the records have been obtained unless a delay of notice has been obtained under § 275.13.

Records concerning your transactions held by the financial institution named in the attached request were obtained by [Agency or Department] under the Right to Financial Privacy Act of 1978 on [date] for the following purpose: [state with reasonable specificity the nature of the law enforcement inquiry]. Emergency access to such records was obtained on the grounds that [state grounds].

(2) Mailings under this paragraph shall be by certified or registered mail.

§ 275.12 Releasing information obtained from financial institutions.

(a) Financial records obtained under 12 U.S.C. Chapter 35 shall be marked: ''This record was obtained pursuant to the Right to Financial Privacy Act of 1978, 12 U.S.C. 3401 *et seq.*, and may not be transferred to another Federal Agency or Department without prior compliance with the transferring requirements of 12 U.S.C. 3412.''

(b) Financial records obtained under this part shall not be transferred to another Agency or Department outside the Department of Defense unless the head of the transferring law enforcement office, personnel security element, or intelligence organization, or designee, certifies in writing that there is reason to believe that the records are relevant to a legitimate law enforcement inquiry, or intelligence or counterintelligence activity (to include investigation or analyses related to international terrorism) within the jurisdiction of the receiving Agency or Department. Such certificates shall be maintained with the DoD Component along with a copy of the released records.

(c) Subject to paragraph (d) of this section, unless a delay of customer notice has been obtained under § 275.13, the law enforcement office or personnel security element shall, within 14 days, personally serve or mail to the customer, at his or her last known address, a copy of the certificate required by paragraph (b) of this section, along with the following notice:

Copies of or information contained in your financial records lawfully in possession of [name of Component] have been furnished to [name of Agency or Department] pursuant to the Right to Financial Privacy Act of 1978 for the following purposes: [state the nature of the law enforcement inquiry with reasonable specificity]. If you believe that this transfer has not been made to further a legitimate law enforcement inquiry, you may have legal rights under the Financial Privacy Act of 1978 or the Privacy Act of 1974.

(d) If a request for release of information is from a Federal Agency, as identified in E.O. 12333, authorized to conduct foreign intelligence or foreign counterintelligence activities, the transferring DoD Component shall release the information without notifying the customer, unless permission to provide notification is given in writing by the requesting Agency.

(e) Whenever financial data obtained under this part is incorporated into a report of investigation or other correspondence; precautions must be taken to ensure that:

(1) The reports or correspondence are not distributed outside the Department of Defense except in compliance with paragraph (b) of this section; and

(2) The report or other correspondence contains an appropriate warning restriction on the first page or cover. Such a warning could read as follows:

Some of the information contained herein (cite specific paragraph) is financial record information which was obtained pursuant to the Right to Privacy Act of 1978, 12 U.S.C. 3401 *et seq.* This information may not be released to another Federal Agency or Department outside the Department of Defense except for those purposes expressly authorized by Act.

§ 275.13 Procedures for delay of notice.

(a) The customer notice required when seeking an administrative subpoena or summons (§ 275.8(b)), obtaining a search warrant (§ 275.9(b)), seeking a judicial subpoena (paragraph (b) to appendix C to this part), making a formal written request (§ 275.8(b)), obtaining emergency access (§ 275.11(c)), or transferring information (§ 275.12(c)) may be delayed for an initial period of 90 days and successive periods of 90 days. The notice required when obtaining a search warrant (§ 275.9(b)) may be delayed for a period of 180 days and successive periods of 90 days. A delay of notice may only be made by an order of an appropriate court if the presiding judge or magistrate finds that:

(1) The investigation is within the lawful jurisdiction of the Government authority seeking the records.

(2) There is reason to believe the records being sought are relevant to a law enforcement inquiry.

(3) There is reason to believe that serving the notice will result in:

(i) Endangering the life or physical safety of any person.

(ii) Flight from prosecution.

(iii) Destruction of or tampering with evidence.

(iv) Intimidation of potential witnesses.

(v) Otherwise seriously jeopardizing an investigation or official proceeding or unduly delaying a trial or ongoing official proceeding to the same degree as the circumstances in paragraphs (a)(2)(i). through (a)(2)(iv) of this section.

(b) When a delay of notice is appropriate, legal counsel shall be consulted to obtain such a delay. Application for delays of notice shall be made with reasonable specificity.

(c) Upon the expiration of a delay of notification obtained under paragraph (a) of this section for a search warrant, the law enforcement office obtaining such records shall mail to the customer a copy of the search warrant, along with the following notice:

Records or information concerning your transactions held by the financial institution named in the attached search warrant were obtained by this [agency or department] on [date].

Notification was delayed beyond the statutory 180-day delay period pursuant to a determination by the court that such notice would seriously jeopardize an investigation concerning [state with reasonable specificity]. You may have rights under the Right to Financial Privacy Act of 1978.

(d) Upon the expiration of all other delays of notification obtained under paragraph (a) of this section, the customer shall be served with or mailed a copy of the legal process or formal request, together with the following notice which shall state with reasonable specificity the nature of the law enforcement inquiry.

Records or information concerning your transactions which are held by the financial institution named in the attached process or request were supplied to or requested by the Government authority named in the process or request on (date). Notification was withheld pursuant to a determination by the (title of the court ordering the delay) under the Right to Financial Privacy Act of 1978 that such notice might (state the reason). The purpose of the investigation or official proceeding was (state the purpose).

§ 275.14 Obtaining access to financial records overseas.

(a) The provisions of 12 U.S.C. Chapter 35 do not govern obtaining access to financial records maintained by military banking contractors overseas or other financial institutions in offices located on DoD installations outside the United States, the District of Columbia, Guam, American Samoa, Puerto Rico, or the Virgin Islands.

(b) Access to financial records held by such contractors or institutions is preferably obtained by customer authorization. However, in those cases where it would not be appropriate to obtain this authorization or where such authorization is refused and the financial institution is not otherwise willing to provide access to its records:

(1) A law enforcement activity may seek access by the use of a search authorization issued pursuant to established Component procedures; Rule 315, Military Rules of Evidence (Part III, Manual for Courts-Martial); and Article 46 of the Uniform Code of Military Justice.

(2) An intelligence organization may seek access pursuant to Procedure 7 of DoD 5240.1–R.

(3) Information obtained under this section shall be properly identified as financial information and transferred only where an official need-to-know exists. Failure to identify or limit access in accordance with this paragraph does not render the information inadmissible in courts-martial or other proceedings.

(4) Access to financial records maintained by all other financial institutions overseas by law enforcement activities shall be in accordance with the local foreign statutes or procedures governing such access.

Appendix A to Part 275—Format for Obtaining Basic Identifying Account Information

[Official Letterhead]
[Date]

Mr./Mrs. XXXXXXXXXX,
Chief Teller [as appropriate],
First National Bank,
Anywhere, VA 00000–0000,

Dear Mr./Mrs. XXXXXXXXXX: In connection with a legitimate law enforcement inquiry and pursuant to section 3413(g) of the Right to Financial Privacy Act of 1978, 12 U.S.C. 3401 et. seq., you are requested to provide the following account information:

[Name, address, account number, and type of account of any customer or ascertainable group of customers associated with a financial transaction or class of financial transactions.]

I hereby certify, pursuant to section 3403(b) of the Right of Financial Privacy Act of 1978, that the provisions of the Act have been complied with as to this request for account information.

Under section 3417(c) of the Act, good faith reliance upon this certification relieves your institution and its employees and agents of any possible liability to the customer in connection with the disclosure of the requested financial records.

[Official Signature Block]

Appendix B to Part 275—Format for Customer Authorization

Pursuant to section 3404(a) of the Right to Financial Privacy Act of 1978, I, [Name of customer], having read the explanation of my rights on the reverse side, hereby authorize the [Name and address of financial institution] to disclose these financial records: [List the particular financial records] to [DoD Component] for the following purpose(s): [Specify the purpose(s)].

I understand that the authorization may be revoked by me in writing at any time before my records, as described above, are disclosed, and that this authorization is valid for no more than three months from the date of my signature.

Signature: _____

Date: _____

[Typed name] _____

[Mailing address of customer] _____

Statement of Customer Rights Under the Right to Financial Privacy Act of 1978

Federal law protects the privacy of your financial records.

Before banks, savings and loan associations, credit unions, credit card issuers, or other financial institutions may give financial information about you to a Federal Agency, certain procedures must be followed.

Authorization To Access Financial Records

You may be asked to authorize the financial institution to make your financial records available to the Government. You may withhold your authorization, and your authorization is not required as a condition of doing business with any financial institution. If you provide authorization, it can be revoked in writing at any time before your records are disclosed. Furthermore, any authorization you provide is effective for only three months, and your financial institution must keep a record of the instances in which it discloses your financial information.

Without Your Authorization

Without your authorization, a Federal Agency that wants to see your financial records may do so ordinarily only by means of a lawful administrative subpoena or summons, search warrant, judicial subpoena, or formal written request for that purpose. Generally, the Federal Agency must give you advance notice of its request for your records explaining why the information is being sought and telling you how to object in court.

The Federal Agency must also send you copies of court documents to be prepared by you with instructions for filling them out. While these procedures will be kept as simple as possible, you may want to consult an attorney before making a challenge to a Federal Agency's request.

Exceptions

In some circumstances, a Federal Agency may obtain financial information about you without advance notice or your authorization. In most of these cases, the Federal Agency will be required to go to court for permission to obtain your records without giving you notice beforehand. In these instances, the court will make the Government show that its investigation and request for your records are proper. When the reason for the delay of notice no longer exists, you will be notified that your records were obtained.

Transfer of Information

Generally, a Federal Agency that obtains your financial records is prohibited from transferring them to another Federal Agency unless it certifies in writing that the transfer is proper and sends a notice to you that your records have been sent to another Agency.

Penalties

If the Federal Agency or financial institution violates the Right to Financial Privacy Act, you may sue for damages or seek compliance with the law. If you win, you may be repaid your attorney's fee and costs.

Additional Information

If you have any questions about your rights under this law, or about how to consent to release your financial records, please call the official whose name and telephone number appears below:

_____

(Last Name, First Name, Middle Initial) Title

(Area Code) (Telephone number)

_____

(Component activity, Local Mailing Address)

Appendix C to Part 275—Format for Formal Written Request

[Official Letterhead]
[Date]

Mr./Mrs. XXXXXXXXXX,
President (as appropriate),
City National Bank and Trust Company,
Anytown, VA 00000–0000.

Dear Mr./Mrs. XXXXXXXXXXXXX: In connection with a legitimate law enforcement inquiry and pursuant to section 3402(5) and section 3408 of the Right to Financial Privacy Act of 1978, 12 U.S.C. 3401 *et seq.,* and [cite Component's implementation of this Part], you are requested to provide the following account information pertaining to the subject:

[Describe the specific records to be examined]

The [DoD Component] is without authority to issue an administrative summons or subpoena for access to these financial records which are required for [Describe the nature or purpose of the inquiry].

A copy of this request was [personally served upon or mailed to the subject on [date] who has [10 or 14] days in which to challenge this request by filing an application in an appropriate United States District Court if the subject desires to do so.

Upon the expiration of the above mentioned time period and absent any filing or challenge by the subject, you will be furnished a certification certifying in writing that the applicable provisions of the Act have been complied with prior to obtaining the requested records. Upon your receipt of a Certificate of Compliance with the Right to Financial Privacy Act of 1978, you will be relieved of any possible liability to the

subject in connection with the disclosure of the requested financial records.

[Official Signature Block]

Appendix D to Part 275—Format for Customer Notice for Administrative or Judicial Subpoena or for a Formal Written Request

[Official Letterhead]
[Date]

Mr./Ms. XXXXX X. XXXX,
1500 N. Main Street,
Anytown, VA 00000–0000.

Dear Mr./Ms. XXXX: Information or records concerning your transactions held by the financial institution named in the attached [administrative subpoena or summons] [judicial subpoena] [request] are being sought by the [Agency/Department] in accordance with the Right to Financial Privacy Act of 1978, Title 12, United States Code, section 3401 *et seq.*, and [Component's implementing document], for the following purpose(s):

[List the purpose(s)]

If you desire that such records or information not be made available, you must:

1. Fill out the accompanying motion paper and sworn statement or write one of your own, stating that you are the customer whose records are being requested by the Government and either giving the reasons you believe that the records are not relevant to the legitimate law enforcement inquiry stated in this notice or any other legal basis for objecting to the release of the records.

2. File the motion and statement by mailing or delivering them to the clerk of any one of the following United States District Courts:

[List applicable courts]

3. Serve the Government authority requesting the records by mailing or delivering a copy of your motion and statement to: [Give title and address].

4. Be prepared to come to court and present your position in further detail.

5. You do not need to have a lawyer, although you may wish to employ one to represent you and protect your rights.

If you do not follow the above procedures, upon the expiration of 10 days from the date of personal service or 14 days from the date of mailing of this notice, the records or information requested therein may be made available. These records may be transferred to other Government authorities for legitimate law enforcement inquiries, in which event you will be notified after the transfer.

[Signature],
[Name and title of official],
[DoD Component],
[Telephone].

Attachments—3
1. Copy of request
2. Motion papers
3. Sworn statement

Appendix E to Part 275—Format for Certificate of Compliance With the Right to Financial Privacy Act of 1978

[Official Letterhead]

[Date]

Mr./Mrs. XXXXXXXXXX,
Manager,
Army Federal Credit Union,
Fort Anywhere, VA 00000–0000.

Dear Mr./Mrs. XXXXXXXXXX: I certify, pursuant to section 3403(b) of the Right to Financial Privacy Act of 1978, 12 U.S.C. 3401 *et seq.*, that the applicable provisions of that statute have been complied with as to the [Customer's authorization, administrative subpoena or summons, search warrant, judicial subpoena, formal written request, emergency access, as applicable] presented on [date], for the following financial records of [customer's name]:

[Describe the specific records]

Pursuant to section 3417(c) of the Right to Financial Privacy Act of 1978, good faith reliance upon this certificate relieves your institution and its employees and agents of any possible liability to the customer in connection with the disclosure of these financial records.

[Official Signature Block]

Dated: January 27, 2006.

L.M. Bynum,

Alternate OSD Federal Register Liaison Officer, DoD.

[FR Doc. E6–1326 Filed 2–1–06; 8:45 am]

BILLING CODE 5001–06–P

Notices

Federal Register

Vol. 71, No. 22

Thursday, February 2, 2006

This section of the FEDERAL REGISTER contains documents other than rules or proposed rules that are applicable to the public. Notices of hearings and investigations, committee meetings, agency decisions and rulings, delegations of authority, filing of petitions and applications and agency statements of organization and functions are examples of documents appearing in this section.

DEPARTMENT OF AGRICULTURE

Agricultural Marketing Service

[Docket No. ST–06–01]

Notice of Request for Extension and Revision of a Currently Approved Information Collection

AGENCY: Agricultural Marketing Service, USDA

ACTION: Notice and request for comments.

SUMMARY: In accordance with the Paperwork Reduction Act of 1995 (44 U.S.C. Chapter 35), this notice announces the Agricultural Marketing Service's (AMS), Science and Technology Program's intention to include three new public information collection request forms when submitting its request for approval from the Office of Management and Budget (OMB), for an extension of and revision to OMB 0581–0055, ''Application for Plant Variety Protection Certification and Objective Description of Variety.'' Copies of the proposed forms may be obtained by calling the Plant Variety Protection Office (PVPO) contact listed.

DATES: Comments on this notice must be received by April 3, 2006.

Additional Information or Comments: Contact Bernadette Thomas, Information Technology Specialist, Plant Variety Protection Office (PVPO), Science and Technology, AMS, Room 401, National Agricultural Library (NAL), 10301 Baltimore Avenue, Beltsville, MD 20705; Telephone (301) 504–5297 and Fax (301) 504–5291.

SUPPLEMENTARY INFORMATION:

Title: Regulations Governing the Application for Plant Variety Protection Certificate and Reporting Requirements under the Plant Variety Protection Act.

OMB Number: 0581–0055.

Expiration Date of Approval: June 30, 2006.

Type of Request: Extension and revision of a currently approved information collection.

Abstract: The Plant Variety Protection Act (PVPA) (7 U.S.C. 2321 *et seq.*) was established ''To encourage the development of novel varieties of sexually reproduced plants and make them available to the public, providing protection available to those who breed, develop, or discover them, and thereby promote progress in agriculture in the public interest.''

The PVPA is a voluntary user funded program which grants intellectual property rights protection to breeders of new, distinct, uniform, and stable seed reproduced and tuber propagated plant varieties. To obtain these rights the applicant must provide information which shows the variety is eligible for protection and that it is indeed new, distinct, uniform, and stable as the law requires. Application forms, descriptive forms, and ownership forms are furnished to applicants to identify the information which is required to be furnished by the applicant in order to legally issue a certificate of protection (ownership). The certificate is based on claims of the breeder and cannot be issued on the basis of reports in publications not submitted by the applicant. Regulations implementing the PVPA appear at 7 CFR part 92.

Currently approved forms ST–470, Application for Plant Variety Protection Certificate, Form ST–470 series, Objective Description of Variety (Exhibit C to Form ST–470P), and Form ST–470–E, Statement of Basis of Applicant's Ownership, are the basis by which the determination, by PVPO, is made as to whether a new, distinct, uniform, and stable seed reproduced or tuber-propagated variety in fact exists and is entitled to protection.

The application form would be revised to add Exhibit F, Declaration Regarding Deposit. This addition would be made because the regulations have been revised to allow applicants to submit a declaration that a voucher seed sample will be deposited, rather than requiring that the deposit be made at the time of the application. The application form would also be revised slightly to update the Voucher Sample to 3,000 viable untreated seeds and the Filing and Examination fee. The information received on applications, with certain exceptions, is required by law to remain confidential until the certificate is issued (7 U.S.C. 2426).

The three new forms to be included in the renewal submission for approval to OMB are:

Form ST–471: Request for Credit Card Services.

Abstract: The information collected on Form ST–471 will be used to authorize payment by credit card for services requested by users of this fee-for-service program. It allows the requestor to specify their contact and billing information. It guides the requestor in providing sufficient details regarding the service to be performed so that PVP Office staff will know how to apply the payment. The list of services and their fees are provided on Page 2 of 3 on the form.

Estimate of Burden: Public reporting burden for this form is estimated to average .5 hours per response.

Respondents: PVP applicants and other requestors of PVP services.

Estimated Number of Respondents: 75.

Estimated Number of Responses per Respondent: 3.

Estimated Total Annual Responses: 225.

Estimated Total Annual Burden on Respondents: 112.50.

Form ST–472: National Center for Genetic Resources Preservation Deposit Form for Plant Variety Protection Voucher Sample.

Abstract: The National Center for Genetic Resources Preservation (NCGRP) requests that certain identification accompany the deposit of seed samples into their seed storage facility, including who the depositor is and what is being deposited. In the past most of this information had been provided by the PVP Office since voucher seed samples were required to be sent to the PVP Office when an application for Plant Variety Protection is filed. A change in procedure allows applicants to submit their voucher seed samples directly to the NCGRP. As a result of this change in procedure, the information collected from applicants on Form ST–472 will provide the NCGRP and the PVP Office with the information necessary to deposit a PVP voucher sample. In order to handle the sample appropriately, the NCGRP would need to know whether it is a genetically engineered organism and whether the material is patented.

Estimate of Burden: Public reporting burden for this form is estimated to average .5 hours per response.

Respondents: PVP applicants.

Estimated Number of Respondents: 75.

Estimated Number of Responses per Respondent: 3.

Estimated Total Annual Responses: 225.

Estimated Total Annual Burden on Respondents: 112.50.

Form ST–473: Recordation Form for Plant Variety Protection Office.

Abstract: For program purposes, it is important that the ownership, contact information, and any encumbrances against PVP Certificates are recorded within the PVP Office. Currently, changes in this information are often reported in an inconsistent or incomplete manner. This can cause difficulties in recording the information and contacting the owner, which can result in cancellation of their intellectual property rights. The information collected on Form ST–473 will be used to record changes in ownership, contact information, assignment, security interest, variety name, and certified seed options, in an orderly fashion.

Estimate of Burden: Public reporting burden for this form is estimated to average .5 hours per response.

Respondents: PVP Applicants.

Estimated Number of Respondents: 25.

Estimated Number of Responses per Respondent: 1.

Estimated Total Annual Responses: 25.

Estimated Total Annual Burden on Respondents: 12.50.

The information collection requirements in this request are essential to carry out the intent of the PVPA, to provide applicants with certificates of protection, to provide the respondents the type of service they request, and to administer the program.

Estimate of Burden: Total public reporting burden for this entire collection is estimated to average .733 hours per response.

Respondents: Businesses or other for-profit, not-for-profit institutions, and Federal Government.

Estimated Number of Respondents: 110.

Estimated Number of Responses per Respondent: 21.

Estimated Total Annual Responses: 2,280.

Estimated Total Annual Burden on Respondents: 1,671.

Comments are invited on: (1) Whether the proposed collection of information is necessary for the proper performance of the functions of the agency, including whether the information will have practical utility; (2) the accuracy of the agency's estimate of the burden of the proposed collection of information including the validity of the methodology and assumptions used; (3) ways to enhance the quality, utility, and clarity of the information to be collected; and (4) ways to minimize the burden of the collection of information on those who are to respond, including the use of appropriate automated, electronic, mechanical, or other technological collection techniques or other forms of information technology. Comments may be sent to Bernadette Thomas, Information Technology Specialist, Plant Variety Protection Office, Room 401, NAL Building, 10301 Baltimore Avenue, Beltsville, MD 20705. All comments received will be available for public inspection during regular business hours at the same address.

All responses to this notice will be summarized and included in the request for OMB approval. All comments will become a matter of public record.

Dated: January 30, 2006.

Lloyd C. Day,

Administrator, Agricultural Marketing Service.

[FR Doc. E6–1382 Filed 2–1–06; 8:45 am]

BILLING CODE 3410–02–P

DEPARTMENT OF AGRICULTURE

Forest Service

Hoosier National Forest, Indiana; German Ridge Restoration Project

AGENCY: Forest Service, USDA.

ACTION: Notice of Availability; FEIS available.

SUMMARY: The USDA Forest Service, Hoosier National Forest has made a decision on a final environmental impact statement for German Ridge Restoration project. The Acting Forest Supervisor has selected Alternative A for implementation. The DEIS discloses the environmental consequences of replacing nonnative pine plantations in the German Ridge area of Perry County, Indiana with native hardwood communities.

The DEIS was available for comment during two comment periods. A previous decision was withdrawn so that a second comment period could be provided in case someone had not been aware of the original opportunity to comment. No additional substantive comments were received during the additional comment period.

DATES: The Forest Supervisor signed the Record of Decision on January 24, 2006.

Copies: To receive a CD or a hard copy of the FEIS or the Record of Decision, request it from Ron Ellis, NEPA Coordinator; Hoosier National Forest; 811 Constitution Avenue; Bedford, IN 47421. To request a CD electronically, send a message with your request to *r9_hoosier_website@fs.fed.us.*

Appeal Opportunities: Only those who submitted substantive comments during one of the two comments periods are eligible to appeal this decision.

ADDRESSES: Send any appeal to the Appeal Deciding Officer: Regional Forester Randy Moore, 626 East Wisconsin Avenue, Milwaukee, WI 53202; fax: 414–944–3963. Send electronic appeals to: *appeals-eastern-hoosier@fs.fed.us.* When submitting electronic comments, please reference the German Ridge Restoration Project on the subject line. In addition, include your name and mailing address.

FOR FURTHER INFORMATION CONTACT: Ron Ellis, NEPA Coordinator, Hoosier National Forest, USDA Forest Service; telephone: 812 275–5987. See address above under *Copies* (under **SUMMARY**). Another means of obtaining information on the project is to visit the Forest Web page at *http://www.fs.fed.us/r9/hoosier*—click on ''Forest Projects,'' then ''Scoping Packages,'' and then ''German Ridge Restoration.''

Selected Alternative

The selected alternative is to implement the proposed action, which would fulfill the goals and objectives of the Forest Plan involving the restoration of native communities; replace pine plantations with native hardwood communities that include a strong component of oaks, hickories, and other fire-adapted plants; and restore natural vegetative conditions to a set of barrens within the project area. To accomplish those goals, the Forest would during the next six or seven years; (1) Apply prescribed fire on approximately 2,170 acres, (2) thin approximately 215 acres, (3) implement pine removal on approximately 355 acres, and (4) complete shelterwood harvest on approximately 120 acres. Additional activities would also be pursued.

Responsible Official

James L. Lowe, Acting Forest Supervisor; Hoosier National Forest; 811 Constitution Avenue; Bedford, Indiana 47421.

(Authority: 40 CFR 1501.7 and 1508.22; Forest Service Handbook 1909.15, Section 21)

Dated: January 24, 2006.

James L. Lowe,

Acting Forest Supervisor.

[FR Doc. 06–975 Filed 2–1–06; 8:45 am]

BILLING CODE 3410–11–M

DEPARTMENT OF AGRICULTURE

Forest Service

Uinta National Forest, Utah; Oil and Gas Leasing Environmental Impact Statement

AGENCY: Forest Service, USDA.

ACTION: Notice of intent to prepare an environmental impact statement.

SUMMARY: The Uinta National Forest is initiating the preparation of an Environmental Impact Statement that would determine under what conditions (stipulations) leases would be issued. The EIS would analyze all lands with a federally-owned leasable mineral estate within the Uinta National Forest.

DATES: Comments concerning the scope of the analysis must be postmarked or received within 45 days from date of publication of this notice in the **Federal Register** to ensure full consideration. The draft environmental impact statement is expected December 2006 and the final environmental impact statement is expected November 2007.

ADDRESSES: Please submit substantive issues or concerns to the Responsible Official: Dan Dallas, Acting Forest Supervisor, Uinta National Forest, P.O. Box 1428, 88 West 100 North, Provo, UT, 84603; phone (801) 342–5100; fax (801) 342–5185; e-mail: *comments-intermtn-uinta@fs.fed.us.* E-mailed comments must be submitted in MS Word (*.doc) or rich text format (*.rtf) and should include the project name in the subject line. Oral comments as well as written comments may also be submitted at the above address during regular business hours of 8 a.m. to 5 p.m., Monday-Friday, excluding Federal holidays.

Each individual or representative from each organization submitting substantive comments must either sign the comments or otherwise verify identity in order to attain appeal eligibility. Comments received in response to this solicitation, including names and addresses of those who comment, will be considered part of the public record for this project.

FOR FURTHER INFORMATION CONTACT: Pam Jarnecke, Environmental Coordinator, or Kim Martin, Minerals Staff Officer, Supervisor's Office of the Uinta National Forest at the address and phone number listed above.

SUPPLEMENTARY INFORMATION: The EIS analysis area includes the entire Uinta National Forest (approximately 897,400 acres), with the exception of designated wilderness areas (approximatley 58,400 acres) and privately held mineral resources in the Strawberry Reservoir area which cover approximately 61,300 acres, for a total study area of approximately 777,700 acres.

The Department of Interior, Bureau of Land Management (BLM), acts as the onshore leasing agent for the Federal government. The Federal Onshore Oil and Gas Leasing Reform Act states that the BLM cannot lease over the objection of the Forest Service and authorizes the Forest Service to regulate all surface-distrubing activities conducted pursuant to a lease. Therefore, the Forest Service has established an incremental decision-making framework for the consideration of oil and gas leasing activites on National Forest System lands. In general, the various steps that are undertaken are: (1) Forest Service leasing analysis; (2) Forest Service notification to BLM of lands administratively available for leasing; (3) Forest Service review and verification of BLM leasing proposals; (4) BLM assessment of Forest Service conditions of surface occupancy; (5) BLM offers lease; (6) BLM issues lease; (7) Forest Service review and approval of lessee's surface use plan of operations; (8) BLM review and approval of lessee's application for permit to drill; and (9) ensures final reclamation.

Based upon the Forest Service leasing analysis (step 1 from above) the Forest Service decides whether or not lands will be available for leasing and decides under what conditions (stipulations) the leases will be issued. This EIS will fullfill this step.

Purpose and Need for Action

The purpose of the proposed action is to complete a forest-wide leasing analysis. The need is to be responsive to requests for oil and gas leasing on the Forest. Currently only a portion of the Forest is available for leasing and most of that area has already been leased. Also, the proposed action is needed in order to comply with the Federal Onshore Oil and Gas Reform Act of 1987 which requires the Forest Service to analyze lands under its jurisdiciton that are legally avialable for leasing in accordance with the National Enviornmental Policy Act of 1969.

Proposed Action

The Proposed Action would make leasing decisions, including identification of stipulations as required by 36 CFR 228.102(d) for the Uinta National Forest System lands. Leasing stipulations outlined on page 3–7 of the 2003 LRMP will be the basis of the stipulations applied forest-wide. The Proposed Action may result in an amendment to the Uinta Revised Forest Plan.

Possible Alternatives

In addition to the Proposed Action, the No Action alternative will be analyzed in detail. The No Action Alternative would continue current management of leasing activities on approximately 197,000 acres of the Uinta National Forest. The remainder of the Uinta National Forest would continue to have no leasing opportunities.

Lead and Cooperating Agencies

The Bureau of Land Management, Salt Lake Field Office, and the State of Utah are cooperating agencies for this project.

Responsible Official

Dan Dallas, Acting Forest Supervisor, Uinta National Forest, P.O. Box 1428, 88 West 100 North, Provo, UT, 84603.

Nature of Decision To Be Made

The Forest Supervisor will decide which lands with federal mineral ownership are administratively available for oil and gas leasing and determine what conditions (stipulations) would be applied to future oil leases on the Uinta National Forest. This decision will not result in ground-disturbing activities within National Forest System lands administered by the Uinta NF such as exploration, drilling, and/or field development. Any ground disturbing activity that may be proposed subsequent to leasing would require further review and environmental analysis prior to approval, as outlined in current Federal regulations (36 CFR 228.107).

Scoping Process

One public scoping meeting will be held using an informal workshop format on Friday, March 3, 2006, at the Provo City Library's Bullock Room from 5 p.m.–7 p.m. The Library is located at 550 North University Avenue, Provo, UT 84601.

Preliminary Issues

Issues which may be analyzed in both alternatives include: the socioeconomic effects of oil and gas leasing and subsequent activities; effects on terrestrial and aquatic flora and fauna, including threatened and endangered species, sensitive species, and management indicator species; effects

on both developed and dispersed recreation; effects on air resources; effects on water resources, including wetlands, floodplains, riparian areas, culinary and municipal water systems, and groundwater; effects on visual resources; effects of leasing stipulations and mitigation measures on oil and gas exploration and development activity; effects on soils and geologic hazards; effects on cultural and traditional heritage resources; effects on transportation; effects on upland vegetation; effects on riparian vegetation; effects on inventoried roadless areas; effects on other mineral resource extraction activities; and effects on noxious weeds and invasive species.

Comment Requested

This notice of intent initiates the scoping process which guides the development of the environmental impact statement.

Early Notice of Importance of Public Participation in Subsequent Environmental Review

A draft environmental impact statement will be prepared for comment. The comment period on the draft environmental impact statement will be 45-days from the date the Environmental Protection Agency publishes the notice of availability in the **Federal Register**.

The Forest Service believes, at this early stage, it is important to give reviewers notice of several court rulings related to public participation in the environmental review process. First, reviewers of draft environmental impact statements must structure their participation in the environmental review of the proposal so that it is meaningful and alerts an agency to the reviewer's position and contentions. *Vermont Yankee Nuclear Power Corp.* v. *NRDC,* 435 U.S. 519, 553 (1978). Also, environmental objections that could be raised at the draft environmental impact statement stage but that are not raised until after completion of the final environmental impact statement may be waived or dismissed by the courts. *City of Angoon* v. *Hodel,* 803 F.2d 1016, 1022 (9th Cir. 1986) and *Wisconsin Heritages, Inc.* v. *Harris,* 490 F. Supp. 1334, 1338 (E.D. Wis. 1980). Because of these court rulings, it is very important that those interested in this proposed action participate by the close of the 45-day comment period so that substantive comments and objections are made available to the Forest Service at a time when it can meaningfully consider them and respond to them in the final environmental impact statement.

To assist the Forest Service in identifying and considering issues and concerns on the proposed action, comments on the draft environmental impact statement should be as specific as possible. It is also helpful if comments refer to specific pages or chapters of the draft statement. Comments may also address the adequacy of the draft environmental impact statement or the merits of the alternatives formulated and discussed in the statement. Reviewers may wish to refer to the Council on Environmental Quality Regulations for implementing the procedural provisions of the National Environmental Policy Act at 40 CFR 1503.3 in addressing these points.

Comments received, including the names and addresses of those who comment, will be considered part of the public record on this proposal and will be available for public inspection.

Dated: January 27, 2006.

Dan S. Dallas,

Acting Forest Supervisor.

[FR Doc. E6–1397 Filed 2–1–06; 8:45 am]

BILLING CODE 3410–11–P

DEPARTMENT OF AGRICULTURE

Forest Service

Eastern Washington Cascades Provincial Advisory Committee and the Yakima Provincial Advisory Committee

AGENCY: Forest Service, USDA.

ACTION: Notice of meeting.

SUMMARY: The Eastern Washington Cascades Provincial Advisory Committee and the Yakima Provincial Advisory Committee will meet on Tuesday, February 28, 2006 at the Chelan County Fire District #1 Sunnyslope Fire Station, 206 Easy Street, Wenatchee, Washington. The meeting will begin at 9 a.m. and continue until 3 p.m. During this meeting we will become acquainted with the collaborative learning process. Members wil recommend how collaborative learning might be used to develop a land allocation option for public consideration during the preparation of a revised forest plan for the Okanogan and Wenatchee National Forests. All Eastern Washington Cascades and Yakima Province Advisory Committee meetings are open to the public.

FOR FURTHER INFORMATION CONTACT: Direct questions regarding this meeting to Paul Hart, Designated Federal Official, USDA, Wenatchee National Forest, 215 Melody Lane, Wenatchee, Washington 98801, 509–664–9200.

Dated: January 27, 2006.

Paul Hart,

Designated Federal Official, Okanogan and Wenatchee National Forests.

[FR Doc. 06–953 Filed 2–1–06; 8:45 am]

BILLING CODE 3410–11–M

DEPARTMENT OF AGRICULTURE

Forest Service

Oregon Coast Provincial Advisory Committee

AGENCY: Forest Service, USDA.

ACTION: Notice of meeting.

SUMMARY: The Oregon Coast and Willamette Province Advisory Committee will meet in Corvallis, OR, February 22, 2006. The theme of the meeting is Introduction/Overview and Business Planning. The agenda includes: NW Forest Plan, BLM RMP Presentation, and Public Comment.

DATES: The meeting will be held February 22, 2006, beginning at 9 a.m.

ADDRESSES: The meeting will be held at the LaSells Stewart Center, 100 LaSells Stewart Center, Corvallis, Oregon 97331.

FOR FURTHER INFORMATION CONTACT: Joni Quarnstrom, Public Affairs Specialist, Siuslaw National Forest, 541–750–7075, or write to Siuslaw National Forest Supervisor, P.O. Box 1148, Corvallis, OR 97339.

SUPPLEMENTARY INFORMATION: The meeting is open to the public. Council Discussion is limited to Forest Service/BLM staff and Council Members. Lunch will be on your won. A public input session will be at 11:30 for fifteen minutes. The meeting is expected to adjourn around 4 p.m.

Dated: January 27, 2006.

Mary Zuschlag,

Supervisory Wildlife Biologist.

[FR Doc. 06–954 Filed 2–1–06; 8:45 am]

BILLING CODE 3410–11–M

DEPARTMENT OF AGRICULTURE

Forest Service

Tehama County Resource Advisory Committee

AGENCY: Forest Service, USDA.

ACTION: Notice of meeting.

SUMMARY: The Tehama County Resource Advisory Committee (RAC) will meet in Red Bluff, California. Agenda items to be covered include: (1) Introductions, (2) Approval of Minutes, (3) Public Comment, (4) Go Over Applications Received, (5) Hammer Loop Phase I

Report, (6) Chairman's Perspective, (7) General Discussion, (8) County Update, (9) Next Agenda, (10) Lassen Approved Projects Report.

DATES: The meeting will be held on February 9, 2006 from 9 a.m. and end at approximately 12 p.m.

ADDRESSES: The meeting will be held at the Lincoln Street School, Conference Room A, 1135 Lincoln Street, Red Bluff, CA. Individuals wishing to speak or propose agenda items must send their names and proposals to Jim Giachino, DFO, 825 N. Humboldt Ave., Willows, CA 95988.

FOR FURTHER INFORMATION CONTACT: Bobbin Gaddini, Committee Coordinator, USDA, Mendocino National Forest, Grindstone Ranger District, P.O. Box 164, Elk Creek, CA 95939. (530) 968–5329; E-mail *ggaddini@fs.fed.us.*

SUPPLEMENTARY INFORMATION: The meeting is open to the public. Committee discussion is limited to Forest Service staff and Committee members. However, persons who wish to bring matters to the attention of the Committee may file written statements with the Committee staff before or after the meeting. Public input sessions will be provided and individuals who made written requests by February 6, 2006 will have the opportunity to address the committee at those sessions.

Dated: January 27, 2006.

Janet Flanagan,

Acting Designated Federal Official.

[FR Doc. 06–958 Filed 2–1–06; 8:45 am]

BILLING CODE 3410–11–M

DEPARTMENT OF AGRICULTURE

Forest Service

Notice of Resource Advisory Committee Meeting

AGENCY: North Central Idaho Resource Advisory Committee, Kamiah, ID, USDA, Forest Service.

ACTION: Notice of meeting.

SUMMARY: Pursuant to the authorities in the Federal Advisory Committee Act (Pub. L. 92–463) and under the Secure Rural Schools and Community Self-Determination Act of 2000 (Pub. L. 106–393) the Nez Perce and Clearwater National Forests' North Central Idaho Resource Advisory Committee will meet Friday, February 24th, 2006, in Lewiston, Idaho for a business meeting. The meeting is open to the public.

SUPPLEMENTARY INFORMATION: The business meeting on February 24th, 2006, will be held at the Idaho State Fish and Game Office, 3316 16th Street, Lewiston, Idaho, beginning at 10 a.m. (PST). Agenda topics will include discussion of potential projects. A public forum will begin at 2:30 p.m. (PST).

FOR FURTHER INFORMATION CONTACT: Ihor Mereszczak, Staff Officer and Designated Federal Officer, at (208) 935–2513.

Dated: January 25, 2006.

Ihor Mereszczak,

Acting Forest Supervisor.

[FR Doc. 06–976 Filed 2–1–06; 8:45 am]

BILLING CODE 3410–11–M

DEPARTMENT OF AGRICULTURE

Natural Resources Conservation Service

Notice of Availability of the Record of Decisions (ROD) for Williamson River Delta Restoration Project

AGENCY: Natural Resources Conservation Service, USDA.

ACTION: Notice of availability of the Record of Decision (ROD) for the Williamson River Delta Restoration Project.

SUMMARY: This notice presents the Record of Decision (ROD) regarding the Natural Resources Conservation Service (NRCS) implementation of the Williamson River Delta Restoration Project to allow NRCS to restore habitat diversity for endangered Lost River and shortnose suckers. NRCS prepared a Final Environmental Impact Statement (FEIS) for the Williamson River Delta Restoration Project and published it on the Oregon NRCS Web site. A Notice of Availability (NOA) of the FEIS was published in the **Federal Register** on July 1, 2005 and all agencies and individuals who expressed interest in the project. Printed and CD–ROM versions of the FEIS were made available and delivered to all those who requested. This Decision Notice summarizes the environmental, social and economic impacts of the Williamson River Delta Restoration Project alternatives identified in the FEIS that were considered in making this decision, and explains why NRCS selected the Preferred Alternative. The Williamson River Delta Restoration Project FEIS and this ROD may be access via the Internet on the Oregon NRCS Web site at: *http://www.or.nrcs.usda.gov/features/klamath.html.*

FOR FURTHER INFORMATION CONTACT: Kevin Conroy, Basin Team Leader, 2316 South 6th St., Suite C, Klamath Falls, Oregon 97601; 541–883–6924 ext. 115; 541–882–9044 (FAX).

DATES: Implementation of the project will begin no earlier than 30 days after the date of publication.

Dated: January 27, 2006.

Danny Burgett,

Acting State Conservationist, Portland, Oregon.

Record of Decision

I. The Decision

Preferred Alternative—As a Means of Accomplishing the Williamson River Delta Restoration Project

The Williamson River Delta Restoration Project (Project) will restore habitat considered essential for the recovery of two federally endangered fish species—the Lost River and shortnose suckers (suckers)—native to Upper Klamath Lake and the Williamson River. The Natural Resources Conservation Service (NRCS) completed a detailed analysis of the Project alternatives. This included a thorough evaluation of the resource areas affected by the Project and a comprehensive review of public comments submitted based on the Draft Environmental Impact Statement (EIS). The Preferred Alternative was selected as the most effective means to meet the purpose and need of the Project, which in summary is to restore and maintain the diversity of habitats that are essential to the endangered Lost River and shortnose suckers while, at the same time, minimizing disturbance and adverse impacts to natural and cultural resources. The need for the proposed action is to increase habitat for suckers. Suckers historically used the wetland habitats on the delta but these areas were eliminated when levees were constructed around the delta and the wetlands converted to agricultural uses.

The preferred alternative included mitigation and monitoring and enforcement actions as part of the decision.

Mitigation: Adverse impacts associated with the Preferred Alternative will be minimized to the extent practical, and techniques to mitigate these impacts will be implemented as described herein and in the Final Environmental Impact Statement (FEIS) (USDA 2005).

Erosion control best management practices (BMPs) will be utilized to minimize adverse impacts to water quality potentially occurring as a result of construction activities. BMPs may include seasoning exposed areas (allowing vegetation to establish),

turbidity barriers, and transplanting native vegetation onto fresh slopes. Construction will take place during the low water season (for both the lake and river) where necessary, so that earthwork will occur in the dry to the greatest extent practicable. Timing of in-water work will be coordinated with the Oregon Department of Fish and Wildlife (ODFW). Internal levee breaches in higher elevation areas may take place during any time of year and will be completed prior to external breaches, and do not experience flooding.

All equipment will use standard noise-control devices in compliance with pertinent noise standards. Standard dust abatement techniques will minimize air borne dust, and construction areas will be well-marked for safety.

To resolve (avoid, mitigate, or minimize) impacts to cultural resources, the NRCS has involved TNC in consulting with the State Historic Preservation Office (SHPO) and the Klamath Tribes according to the National Historic Preservation Act. The NRCS and TNC will continue to consult with SHPO and the Tribes through the implementation of the Restoration Project. Areas with known cultural resource sites will be avoided, and cultural resource monitors will be present with each piece of moving equipment operating in culturally sensitive areas during construction. Revegetation and other erosion control efforts will also help stabilize cultural resource sites.

Construction areas will be well-marked for safety and to minimize adverse impacts with navigation and recreational uses. Coordination with these user groups will occur to minimize potential conflicts.

The NRCS received a Biological Opinion (BO) and Incidental Take Statement (ITS) from the U.S. Fish and Wildlife Service (USFWS) under the Endangered Species Act and will continue to consult with the USFWS in any situation with a potential to affect threatened or endangered species or critical habitat. Under the terms of the BO, NRCS will: (1) Minimize the take of suckers as a result of Project implementation by appropriately monitoring conditions resulting from the proposed action and using adaptive management where practicable to minimize take and (2) Minimize take of listed species by developing and implementing a pesticide application plan (USFWS 2005). Any in-water work activities will be coordinated with the Oregon Department of Fish and Wildlife.

Permits were obtained from the U.S. Army Corps of Engineers (Corps) (Permit # 200200432) and the Oregon Department of State Lands (DSL) (Permit # 35020–GA) for work to be conducted in jurisdictional wetlands and other waters of the state and U.S. (Corps permit for Section 404 of the Clean Water Act and DSL permit for Oregon state removal/fill law). Oregon Department of Environmental Quality (DEQ) Section 401 Water Quality Certification was granted through issuance of the Corps permit. The Project will be conducted in compliance with the provisions set forth in the above permits, certification, and ITS.

Monitoring efforts will occur as part of the proposed action. These efforts are a function of TNC's ongoing land management at the Williamson River Delta. This monitoring will occur in addition to monitoring needs resulting from regulatory compliance requirements (*i.e.*, USFWS, Corps, DSL, and DEQ). Monitoring will be conducted during construction as well as post-construction. A brief description of each of these efforts is provided below, including any regulatory nexus.

Construction Monitoring

Construction monitoring is intended to monitor the effects of the construction activities on the surrounding environment. Elements to be monitored include cultural resources and water quality. As agreed upon through consultation with SHPO, during restoration, cultural resource monitors would be on site with each piece of earth moving equipment associated with ground disturbance to help ensure that identified areas are not disturbed and, if artifacts are discovered, the appropriate actions will be taken.

Turbidity monitoring will be required upon initiation of construction as a condition of the Corps 404 permit, the DEQ Section 401 Water Quality Certification and the DSL permit. This monitoring likely will consist of taking water quality samples and conducting Secchi disk turbidity monitoring within the project vicinity several times a day during the construction period. These results will be provided to the Corps and DEQ for their review. Should turbidity levels exceed the agreed-upon standards, TNC will consult with DEQ and the Corps to determine appropriate actions to be taken to reduce construction impacts.

Post-Construction Monitoring

The purpose of the post-restoration monitoring plan will be to assess whether the restoration activities meet the purpose and need of the project. This will include documenting specific changes in wetland flora and fauna and water quality that are direct outcomes of Project activities. The monitoring plan will be implemented in certain areas of the Project every year, to reflect the scheduling of restoration activities. The plan will remain in place for 2 to 5 years post-restoration, depending on the results. However, monitoring is not static and is intended to be adaptive. Thus, results from early phases of the restoration will inform subsequent phases. Likewise, after all planned restoration activities are complete, monitoring results will direct further follow-up actions. Monitoring efforts will encompass at a minimum: Fish use/habitat changes, plant community changes, and water quality dynamics. For more specifics on the monitoring plan for these components, please refer to the FEIS (USDA 2005).

Post-restoration sucker sampling and monitoring will focus on documenting larval and juvenile sucker use and success in restored areas of the Delta. Water chemistry (including but not limited to temperature, dissolved oxygen, pH, specific conductance, and nutrient concentrations) and general habitat features (water depth and vegetation profile) will be assessed at larval and juvenile collection sites simultaneous to fish sampling. The monitoring plan will be developed with input and assistance of the Project Technical Committee, which includes representatives from the NRCS, Klamath Tribes, USFWS, TNC, and Reclamation.

II. Rationale for Decision

Three restoration (action) alternatives and a No Action Alternative were evaluated. The No Action Alternative was not the chosen alternative because if left alone, habitat for the endangered suckers would continue to degrade, which would not move towards recovery of these two species. Under the No Action Alternative the delta would remain in a degraded condition, historic hydrologic functions would not be restored, and the associated benefits to sucker habitat would not occur.

The three restoration alternatives were as follows:

Alternative 1: Preferred Alternative.

Alternative 2: Restoration of Channel Form Alternative.

Alternative 3: Basic Reconnection Alternative.

Implementation of each restoration alternative would restore, to varying degrees, historic delta hydrologic functions and the associated benefits to sucker habitat.

- The Basic Reconnection Alternative includes the minimum level of habitat

improvements required to meet the Project purpose and need.

• The Preferred Alternative provides significantly greater habitat improvement. It incorporates all of the design elements of the Basic Reconnection Alternative plus dredging an historic oxbow, creating an alternate channel at the river mouth, and restoring a riparian fringe adjacent to the river channel. This alternative also includes other sucker habitat improvement elements not associated with the Basic Reconnection Alternative.

• The Restoration of Channel Form Alternative includes the greatest amount of sucker habitat improvement of the three restoration alternatives because it incorporates all elements associated with the Preferred Alternative as well as restoring additional habitat along the Williamson River channel. However, these increased benefits do not overcome the adverse impacts to cultural resources, water quality and local navigation when compared to the Preferred Alternative. This alternative also was significantly more expensive than the other two alternatives without providing significantly more sucker habitat and diversity.

The relevant factors and rationale to make this decision were as follows. It was determined that the Restoration of Channel Form Alternative presented permanent adverse impacts to navigation (*i.e.*, limitations to vessel size relative to current conditions) (FEIS page 175; USDA 2005), and excessive risk associated with construction related water quality impacts due to greater earthwork and fill volumes placed into the active river channel (*i.e.* elevated turbidity) (FEIS page 173; USDA 2005). This alternative also presented the greatest potential risk and adverse impacts to cultural resources (*i.e.* increased earthwork poses greater potential for exposing artifacts) (FEIS page 175; USDA 2005). The above differences in impacts are directly related to the in-channel fills associated with narrowing and blocking the river channel under the Restoration of Channel Form Alternative. Adverse impacts associated with the Basic Reconnection Alternative were determined to be only slightly less than the Preferred Alternative (FEIS; pages 173–175; USDA 2005); however, improvements to sucker habitat would be significantly less (FEIS page 173; USDA 2005). Therefore, the Preferred Alternative was identified as the environmentally preferred alternative as it best balances the purpose and need of maximizing improvements to sucker habitat and minimizing adverse impacts (FEIS pages 173–175; USDA 2005).

III. Mitigation

As described within the FEIS, all practicable means to avoid or minimize environmental harm have been adopted as part of the action. There are irreversible and unavoidable adverse impacts associated with all of the Alternatives that are identified and discussed in the FEIS (FEIS page 170; USDA 2005). Most of these are due to construction related activities. However, most importantly, long-term project benefits will far outweigh the negative short-term effects of construction.

IV. Monitoring and Enforcement

There are no monitoring and enforcement actions that were not included in the preferred alternative and thus became part of the decision.

Decision Statement

In accordance with the Council of Environmental Quality (CEQ) regulations, I have considered all alternatives in this analysis and public input to this project and have identified Alternative 1 (Preferred Alternative) as the alternative to be implemented because it provides the most habitat diversity for endangered suckers while balancing the adverse affects to the natural resources of the area.

Signed by Bob Graham (Responsible Federal Official) in Portland, Oregon on January 23, 2006.

Bob Graham,

Oregon State Conservationist, USDA—Natural Resources Conservation Service.

References

USDA Natural Resources Conservation Service. 2005. Final Environmental Impact Statement, Williamson River Delta Restoration Project. Portland, Oregon. Pp. 187.

U.S. Fish and Wildlife Service. 2005. Biological Opinion for the Williamson River Delta Restoration Project, Klamath County. Klamath Falls, Oregon. Pp. 51.

[FR Doc. E6–1458 Filed 2–1–06; 8:45 am]

BILLING CODE 3410–16–P

DEPARTMENT OF AGRICULTURE

Natural Resources Conservation Service

Notice of Proposed Changes to the Natural Resources Conservation Service's National Handbook of Conservation Practices

AGENCY: Natural Resources Conservation Service (NRCS), Department of Agriculture.

ACTION: Notice of availability of proposed changes in the NRCS National Handbook of Conservation Practices for public review and comment.

SUMMARY: Notice is hereby given of the intention of NRCS to issue a series of new or revised conservation practice standards in its National Handbook of Conservation Practices. These standards include: ''Cover Crop (Code 340)'', ''Nutrient Management (Code 590)'', ''Prescribed Forestry (Code 409)'', ''Silvopasture Establishment (Code 381)'', and ''Spring Development (Code 574)''. NRCS State Conservationists who choose to adopt these practices for use within their states will incorporate them into Section IV of their respective electronic Field Office Technical Guides (eFOTG). These practices may be used in conservation systems that treat highly erodible land or on land determined to be wetland.

DATES: *Effective Dates:* Comments will be received for a 30-day period commencing with this date of publication. This series of new or revised conservation practice standards will be adopted after the close of the 30-day period.

FOR FURTHER INFORMATION CONTACT: Copies of these standards can be downloaded or printed from the following Web site: *ftp://ftp-fc.sc.egov.usda.gov/NHQ/practice-standards/federal-register/.* Single copies of these standards are also available from NRCS in Washington, DC. Submit individual inquiries in writing to Daniel Meyer, National Agricultural Engineer, Natural Resources Conservation Service, P.O. Box 2890, Room 6139–S, Washington, DC 20013–2890.

SUPPLEMENTARY INFORMATION: Section 343 of the Federal Agriculture Improvement and Reform Act of 1996 requires the NRCS to make available for public review and comment proposed revisions to conservation practice standards used to carry out the highly erodible land and wetland provisions of the law. For the next 30 days, the NRCS will receive comments relative to the proposed changes. Following that period, a determination will be made by the NRCS regarding disposition of those comments and a final determination of changes will be made.

Signed in Washington, DC, on January 24, 2006.

Bruce I. Knight,

Chief.

[FR Doc. E6–1406 Filed 2–1–06; 8:45 am]

BILLING CODE 3410–16–P

DEPARTMENT OF COMMERCE

Foreign–Trade Zones Board

[Docket 57–2005]

Foreign–Trade Zone No. 181, Application for Expansion, Amendment of Application

Notice is hereby given that the application of the Northeast Ohio Trade & Economic Consortium (NEOTEC), grantee of FTZ 181, for authority to expand and reorganize FTZ 181 in the Akron/Canton, Ohio area (Doc. 57–2005, 70 FR 71085, 11/25/05), has been amended to delete the proposed transfer of a parcel within the Cuyahoga Falls Industrial Park to leaving the 12 acres in the northwestern and central portions of the Park as part of the zone. The application otherwise remains unchanged.

Comments on the change may be submitted to the Foreign–Trade-Zones Board, U.S. Department of Commerce, FCB—Suite 4100W, 1401 Constitution Ave., NW., Washington, DC 20230, by February 17, 2006.

Dennis Puccinelli,

Executive Secretary.

[FR Doc. E6–1417 Filed 2–1–06; 8:45 am]

BILLING CODE 3510–DS–S

DEPARTMENT OF COMMERCE

International Trade Administration

North American Free-Trade Agreement, Article 1904; NAFTA Panel Reviews; Request for Panel Review

AGENCY: NAFTA Secretariat, United States Section, International Trade Administration, Department of Commerce.

ACTION: Notice of First Request for Panel Review.

SUMMARY: On January 25, 2006, CEMEX, S.A. de C.V. (''CEMEX'') filed a First Request for Panel Review with the United States Section of the NAFTA Secretariat pursuant to Article 1904 of the North American Free Trade Agreement. Panel review was requested of the 14th administrative review made by the International Trade Administration, respecting Gray Portland Cement and Clinker from Mexico. A second request for panel review was filed on January 25, 2006 on behalf of GCC Cementos, S.A. de C.V. (''GCCC''). This determination was published in the **Federal Register** (71 FR 2909) on January 18, 2006. The NAFTA Secretariat has assigned Case Number USA–MEX–2006–1904–03 to this request.

FOR FURTHER INFORMATION CONTACT: Caratina L. Alston, United States Secretary, NAFTA Secretariat, Suite 2061, 14th and Constitution Avenue, Washington, DC 20230, (202) 482–5438.

SUPPLEMENTARY INFORMATION: Chapter 19 of the North American Free-Trade Agreement (''Agreement'') establishes a mechanism to replace domestic judicial review of final determinations in antidumping and countervailing duty cases involving imports from a NAFTA country with review by independent binational panels. When a Request for Panel Review is filed, a panel is established to act in place of national courts to review expeditiously the final determination to determine whether it conforms with the antidumping or countervailing duty law of the country that made the determination.

Under Article 1904 of the Agreement, which came into force on January 1, 1994, the Government of the United States, the Government of Canada and the Government of Mexico established *Rules of Procedure for Article 1904 Binational Panel Reviews* (''Rules''). These Rules were published in the **Federal Register** on February 23, 1994 (59 FR 8686).

A first Request for Panel Review was filed with the United States Section of the NAFTA Secretariat, pursuant to Article 1904 of the Agreement, on January 25, 2006, requesting panel review of the determination described above.

The Rules provide that:

(a) A Party or interested person may challenge the final determination in whole or in part by filing a Complaint in accordance with Rule 39 within 30 days after the filing of the first Request for Panel Review (the deadline for filing a Complaint is February 24, 2006);

(b) A Party, investigating authority or interested person that does not file a Complaint but that intends to appear in support of any reviewable portion of the final determination may participate in the panel review by filing a Notice of Appearance in accordance with Rule 40 within 45 days after the filing of the first Request for Panel Review (the deadline for filing a Notice of Appearance is March 13, 2006); and

(c) The panel review shall be limited to the allegations of error of fact or law, including the jurisdiction of the investigating authority, that are set out in the Complaints filed in the panel review and the procedural and substantive defenses raised in the panel review.

Dated: January 26, 2006.

Caratina L. Alston,

United States Secretary, NAFTA Secretariat.

[FR Doc. E6–1359 Filed 2–1–06; 8:45 am]

BILLING CODE 3510–GT–P

DEPARTMENT OF COMMERCE

International Trade Administration

North American Free-Trade Agreement (NAFTA), Article 1904 Binational Panel Reviews

AGENCY: NAFTA Secretariat, United States Section, International Trade Administration, Department of Commerce.

ACTION: Notice of Decision of Panel.

SUMMARY: On January 27, 2006, the binational panel issued its decision in the review of the final determination made by the International Trade Administration, respecting Oil Country Tubular Goods from Mexico Final Antidumping Duty Administrative Review and Determination not to Revoke, Secretariat File No. USA–MEX–2001–1904–05. The binational panel affirmed in part and remanded in part to the International Trade Administration. Copies of the panel decision are available from the U.S. Section of the NAFTA Secretariat.

FOR FURTHER INFORMATION CONTACT: Caratina L. Alston, United States Secretary, NAFTA Secretariat, Suite 2061, 14th and Constitution Avenue, Washington, DC 20230, (202) 482–5438.

SUPPLEMENTARY INFORMATION: Chapter 19 of the North American Free-Trade Agreement (''Agreement'') establishes a mechanism to replace domestic judicial review of the final determinations in antidumping and countervailing duty cases involving imports from a NAFTA country with review by independent binational panels. When a Request for Panel Review is filed, a panel is established to act in place of national courts to review expeditiously the final determination to determine whether it conforms with the antidumping or countervailing duty law of the country that made the determination.

Under Article 1904 of the Agreement, which came into force on January 1, 1994, the Government of the United States, the Government of Canada and the Government of Mexico established *Rules of Procedure for Article 1904 Binational Panel Reviews* (''Rules''). These Rules were published in the **Federal Register** on February 23, 1994 (59 FR 8686). The panel review in this matter has been conducted in accordance with these Rules.

Panel Decision: The Panel concluded and ordered the Department as follows:

(1) The Panel affirms the Department's decision to deny TAMSA's request for revocation of the antidumping order.

(2) The Panel affirms the decision of the Department as it relates to Hylsa regarding the treatment of export insurance as a direct expense, and in rejecting Hylsa's challenge to the Department's ''zeroing practice''.

(3) The Panel remands the case as it relates to Hylsa to the Department to recalculate the final antidumping margins by:

1. Recalculating the packing costs by (a) taking into account that the cost for automation was captured as an overhead fixed asset; (b) not averaging the packing costs from cost center 2052 for the entire POR because it is not reasonable; and (c) taking into consideration only the packing costs reported by Hylsa for cost center 2052 and only for the two months in which OCTG products were packed.

2. Recalculating the cost of production by averaging the costs of production for both sizes of pipe and for both months to determine a single average cost given the absence of any basis in the record justifying different production costs based on size.

(4) In the event the recalculation results in a zero or *de minimus* antidumping margin, the Panel directs the Department to address Hylsa's request for revocation of the antidumping order.

The Department was directed to report the results of its remand decision within 45 days of the date of the opinion, or not later than March 13, 2006.

Dated: January 27, 2006.

Caratina L. Alston,

United States Secretary, NAFTA Secretariat.

[FR Doc. E6–1361 Filed 2–1–06; 8:45 am]

BILLING CODE 3510–GT–P

DEPARTMENT OF COMMERCE

International Trade Administration

Notice of Scope Rulings

AGENCY: Import Administration, International Trade Administration, Department of Commerce.

EFFECTIVE DATE: February 2, 2006.

SUMMARY: The Department of Commerce (the Department) hereby publishes a list of scope rulings completed between October 1, 2005, and December 31, 2005. In conjunction with this list, the Department is also publishing a list of requests for scope rulings and anticircumvention determinations pending as of December 31, 2005. We intend to publish future lists after the close of the next calendar quarter.

FOR FURTHER INFORMATION CONTACT: Alice Gibbons, AD/CVD Operations, Office 2, Import Administration, International Trade Administration, U.S. Department of Commerce, 14th Street and Constitution Avenue, NW, Washington, DC 20230; telephone: (202) 482–0498.

SUPPLEMENTARY INFORMATION:

Background

The Department's regulations provide that the Secretary will publish in the **Federal Register** a list of scope rulings on a quarterly basis. *See* 19 CFR 351.225(o). Our most recent ''Notice of Scope Rulings'' was published on November 23, 2005. *See* 70 FR 70785. The instant notice covers all scope rulings and anticircumvention determinations completed by Import Administration between October 1, 2005, and December 31, 2005, inclusive. It also lists any scope or anticircumvention inquiries pending as of December 31, 2005, as well as scope rulings inadvertently omitted from prior published lists. As described below, subsequent lists will follow after the close of each calendar quarter.

Scope Rulings Completed Between October 1, 2005 and December 31, 2005:

People's Republic of China

A–570–803: Heavy Forged Hand Tools, Finished or Unfinished, With or Without Handles, from the People's Republic of China

Requestor: Avalanche Industries LLC; its ''Mean Green Splitting Machine'' (also known as the ''Smart Splitter'') is included within the scope of the bars and wedges antidumping duty order; October 14, 2005.

A–570–803: Heavy Forged Hand Tools, Finished or Unfinished, With or Without Handles, from the People's Republic of China

Requestor: Tianjin Machinery Import & Export Corporation; On September 22, 2005, the Court of International Trade upheld the Department's remand redetermination, which found that cast picks are outside the scope of the antidumping duty order on picks/mattocks; Because no party appealed this decision, this decision became final and conclusive on November 22, 2005.

A–570–890: Wooden Bedroom Furniture from the People's Republic of China

Requestor: Dorel Asia; infant (baby) armoires and toy boxes and chests are within the scope of the antidumping duty order; November 14, 2005.

A–570–890: Wooden Bedroom Furniture from the People's Republic of China

Requestor: Leggett & Platt; three–sided wooden daybeds with the back being longer than the two sides and are designed for use with a metal daybed link spring support (also known as a ''top spring'') are within the scope of the antidumping duty order; November 21, 2005.

A–570–890: Wooden Bedroom Furniture from the People's Republic of China

Requestor: LumiSource, Inc.; its cell phone stash chair, whale stash chair, dolphin stash chair, and stash cube are excluded from the antidumping duty order; December 15, 2005.

Anti–circumvention Determinations Completed Between October 1, 2005 and December 31, 2005:

None.

Anti–circumvention Inquiries Terminated Between October 1, 2005 and December 31, 2005:

None.

Scope Inquiries Terminated Between October 1, 2005 and December 31, 2005:

People's Republic of China

A–570–898: Chlorinated Isocyanurates from the People's Republic of China

Requestor: Enviro Tech Chemical Services, Inc.; whether powdered trichlorisocyanuric acid should be considered a separate like product; requested October 10, 2005; terminated November 4, 2005.

Scope Inquiries Pending as of December 31, 2005:

Canada

A–122–838: Certain Softwood Lumber Products from Canada

Requestor: Coalition for Fair Lumber Imports Executive Committee; whether lumber entering under the HTSUS number 4409.10.05 is within the scope of the order; requested December 19, 2005.

People's Republic of China

A–570–504: Petroleum Wax Candles from the People's Republic of China

Requestor: Design Ideas, Ltd.; whether its ''Lumanae'' and ''Lounge Light'' candles are within the scope of the antidumping duty order; requested December 29, 2005.

A–570–504: Petroleum Wax Candles from the People's Republic of China

Requestor: Eighteen Karat International Product Sourcing, Inc.; whether its 12 ''orchid'' candles are within the scope of the antidumping duty order; requested September 12, 2005.

A–570–504: Petroleum Wax Candles from the People's Republic of China

Requestor: Kohl's Department Stores, Inc.; whether its chicken shaped candle is within the scope of the antidumping duty order; requested November 29, 2005.

A–570–832: Pure Magnesium from the People's Republic of China

Requestor: U.S. Magnesium LLC; whether pure and alloy magnesium processed in Canada, France, or any third country and exported to the United States using pure magnesium ingots originally produced in the PRC is within the scope of the antidumping duty order; requested July 19, 2005; initiated September 2, 2005.

A–570–868: Folding Metal Tables and Chairs from the People's Republic of China

Requestor: Mac Industries (Shanghai) Co., Ltd., Jiaxing Yinmao International Treading Co., Ltd., and Fujian Zenithen Consumer Products Co., Ltd.; whether their ''moon chair'' is within the scope of the antidumping duty order; requested August 18, 2005; initiated November 29, 2005.

A–570–878: Saccharin from the People's Republic of China

Requestor: PMC Specialities Group, Inc.; whether certain saccharin products originating in the PRC and further–processed in Israel are within the scope of the antidumping duty order; requested August 12, 2005; initiated October 26, 2005.

A–570–890: Wooden Bedroom Furniture from the People's Republic of China

Requestor: Cape Craftsmen; whether various cabinets/commodes are within the scope of the antidumping duty order; requested October 28, 2005.

A–570–890: Wooden Bedroom Furniture from the People's Republic of China

Requestor: Dorel Asia; whether infant (baby) changing tables and toddler beds are within the scope of the antidumping duty order; requested February 15, 2005; initiated November 14, 2005.

A–570–890: Wooden Bedroom Furniture from the People's Republic of China

Requestor: L. Powell Company; whether certain jewelry armoires without felt or felt–like lining on the door are within the scope of the antidumping duty order; requested November 30, 2005.

A–570–890: Wooden Bedroom Furniture from the People's Republic of China

Requestor: Whitewood Industries; whether certain wooden jewelry armoires lined with felt of felt–like material are within the scope of the antidumping duty order; requested December 5, 2005.

A–570–891: Hand Trucks and Certain Parts Thereof from the People's Republic of China

Requestor: Central Purchasing, LLC.; whether an accessory cart that is specifically designed to fit and carry a ''Breaker Hammer,'' and is imported separately from the Breaker Hammer, is within the scope of the antidumping duty order; requested November 22, 2005.

A–570–891: Hand Trucks and Certain Parts Thereof from the People's Republic of China

Requestor: Central Purchasing, LLC.; whether a ''welding cart'' is within the scope of the antidumping duty order; requested December 22, 2005.

A–570–896: Magnesium Metal from the People's Republic of China

Requestor: U.S. Magnesium LLC; whether pure and alloy magnesium processed in Canada, France, or any third country, and exported to the United States using pure magnesium ingots originally produced in the PRC, is within the scope of the antidumping duty order; requested July 19, 2005; initiated September 2, 2005.

Republic of Korea

C–580–851: Dynamic Random Access Memory Semiconductors from the Republic of Korea

Requestor: Cisco Systems, Inc.; whether removable memory modules placed on motherboards that are imported for repair or refurbishment are within the scope of the countervailing duty order; requested December 29, 2004; initiated February 4, 2005.

Vietnam

A–552–801: Certain Frozen Fish Fillets From the Socialist Republic of Vietnam

Requestor: Piazza Seafood World LLC; whether certain basa and tra fillets from Cambodia which are a product of Vietnam are excluded from the antidumping duty order; requested May 12, 2004; initiated October 22, 2004.

Anti–circumvention Inquiries Pending as of December 31, 2005:

People's Republic of China

A–570–504: Petroleum Wax Candles from the People's Republic of China

Requestor: National Candle Association; whether imports of palm and vegetable–based wax candles from the PRC can be considered later–developed merchandise which is now circumventing the antidumping duty order; requested October 8, 2004; initiated February 25, 2005.

A–570–504: Petroleum Wax Candles from the People's Republic of China

Requestor: National Candle Association; whether imports of palm and vegetable–based wax candles from the PRC can be considered a minor alteration to the subject merchandise for purposes of circumventing the antidumping duty order; requested October 12, 2004; initiated February 25, 2005.

A–570–504: Petroleum Wax Candles from the People's Republic of China

Requestor: National Candle Association; whether imports of candles from the PRC without wicks, into which wicks are then inserted after importation, can be considered ''merchandise completed or assembled in the United States'' and are circumventing the antidumping duty order; requested December 14, 2005.

A–570–868: Folding Metal Tables and Chairs from the People's Republic of China

Requestor: Meco Corporation; whether adding a cross–brace to folding metal tables from the PRC to join two legs into pairs can be considered minor alterations to merchandise, which is now circumventing the antidumping duty order (the scope defines the legs of folding metal tables as ''legs that mechanically fold independently of one another''); requested October 31, 2005.

Vietnam

A–552–801: Certain Frozen Fish Fillets From the Socialist Republic of Vietnam

Requestor: Catfish Farmers of America and certain individual U.S. catfish processors; whether imports of frozen fish fillets from Cambodia made from live fish sourced from Vietnam, and falling within the scope of the order, can be considered ''merchandise completed or assembled in other foreign countries'' and are circumventing the antidumping

duty order; requested August 20, 2004; initiated October 22, 2004.

Scope Rulings Inadvertently Omitted from Prior Published Lists:

None.

Interested parties are invited to comment on the completeness of this list of pending scope and anti–circumvention inquiries. Any comments should be submitted to the Deputy Assistant Secretary for AD/CVD Operations, Import Administration, International Trade Administration, 14th Street and Constitution Avenue, NW, Room 1870, Washington, DC 20230.

This notice is published in accordance with 19 CFR 351.225(o) of the Department's regulations.

Dated: January 30, 2006.

Stephen J. Claeys,

Deputy Assistant Secretary for Import Administration.

[FR Doc. E6–1416 Filed 2–1–06; 8:45 am]

BILLING CODE 3510–DS–S

DEPARTMENT OF COMMERCE

National Oceanic and Atmospheric Administration

[I.D. 013006G]

Gulf of Mexico Fishery Management Council; Public Meeting

AGENCY: National Marine Fisheries Service (NMFS), National Oceanic and Atmospheric Administration (NOAA), Commerce.

ACTION: Notice of public meeting.

SUMMARY: The Gulf of Mexico Fishery Management Council will convene a public meeting of the Ad Hoc Grouper Individual Fishing Quota (IFQ) Advisory Panel (AHGIFQAP).

DATES: The AHGIFQAP meeting will convene at 9 a.m. on Wednesday, February 22 and conclude no later than 2 p.m. on Thursday, February 23, 2006.

ADDRESSES: The meeting will be held at the Embassy Suites Hotel Tampa – Airport/Westshore, 555 North Westshore Boulevard, Tampa, FL 33609, telephone: (813) 875–1555.

Council address: Gulf of Mexico Fishery Management Council, 2203 North Lois Avenue, Suite 1100, Tampa, FL 33607.

FOR FURTHER INFORMATION CONTACT: Stu Kennedy, Fishery Biologist, telephone: (813) 348–1630.

SUPPLEMENTARY INFORMATION: The Gulf of Mexico Fishery Management Council has begun deliberation of a Dedicated Access Privilege System (DAP) for the Commercial grouper fishery. The Council has appointed an Ad Hoc Grouper Individual Fishing Quota (IFQ) Advisory Panel (AHGIFQAP) composed of commercial grouper fishermen and others knowledgeable about DAP systems to assist in the development of such a program. This will be the first meeting of the AHGIFQAP. They will be asked to provide some broad general recommendations on the scope and the general configuration of such a program to the Council for discussion at the Council's March 20 – 23, 2006 meeting in Mobile, AL.

Although other non-emergency issues not on the agenda may come before the AHGIFQAP for discussion, in accordance with the Magnuson-Stevens Fishery Conservation and Management Act (Magnuson-Stevens Act), those issues may not be the subject of formal action during these meetings. Actions of the AHGIFQAP will be restricted to those issues specifically identified in the agenda and any issues arising after publication of this notice that require emergency action under section 305(c) of the Magnuson-Stevens Act, provided the public has been notified of the Council's intent to take action to address the emergency.

Copies of the agenda can be obtained by calling (813) 348–1630.

Special Accommodations

This meeting is physically accessible to people with disabilities. Requests for sign language interpretation or other auxiliary aids should be directed to Dawn Aring at the Council (see **ADDRESSES**) at least 5 working days prior to the meeting.

Dated: January 30, 2006.

Tracey L. Thompson,

Acting Director, Office of Sustainable Fisheries, National Marine Fisheries Service.

[FR Doc. E6–1410 Filed 2–1–06; 8:45 am]

BILLING CODE 3510–22–S

DEPARTMENT OF COMMERCE

National Oceanic and Atmospheric Administration

[I.D. 013006C]

North Pacific Fishery Management Council; Public Meeting

AGENCY: National Marine Fisheries Service (NMFS), National Oceanic and Atmospheric Administration (NOAA), Commerce.

ACTION: Notice of a public meeting of the North Pacific Fishery Management Council's Pacific Northwest Crab Industry Advisory Committee (PNCIAC).

SUMMARY: The PNCIAC will convene a meeting on Thursday, February 23, 2006, in Seattle, WA. The meeting is open to the public.

DATES: The meeting will be held on Thursday, February 23, 2006, from 9 a.m. to 2 p.m.

ADDRESSES: The meeting will be held at the Leif Erikson Hall, 2245 NW 57th Street, Seattle, WA 98107 (in Ballard).

Council address: North Pacific Fishery Management Council, 605 W. 4th Ave., Suite 306, Anchorage, AK 99501–2252.

FOR FURTHER INFORMATION CONTACT: Dr. Diana Stram, Council Staff, telephone: (907) 271–2809.

SUPPLEMENTARY INFORMATION:

Agenda

1. Discussion and recommendation on the Alaska Crab Coalition (ACC) proposal before the Board of Fisheries to review and consider adjusting or eliminating the minimum total allowable catch (TAC) for reopening the Eastern District (Bristol Bay) bairdi fishery and other king crab fisheries.

2. Discussion of Bristol Bay king crab harvest strategy and 2005 season management concerns.

3. Discussion of Bering Sea opilio crab harvest strategy and management concerns.

Although non-emergency issues not contained in this agenda may be discussed, those issues may not be the subject of formal action during this meeting. Action will be restricted to those issues specifically listed in this document and any issues arising after publication of this document that require emergency action under section 305(c) of the Magnuson-Stevens Fishery Conservation and Management Act, provided the public has been notified of the intent to take final action to address the emergency.

Special Accommodations

This meeting is physically accessible to people with disabilities. Requests for sign language interpretation or other auxiliary aids should be directed to Gail Bendixen at (907) 271–2809 at least 7 working days prior to the meeting date.

Dated: January 30, 2006.

Tracey L. Thompson,

Acting Director, Office of Sustainable Fisheries, National Marine Fisheries Service.

[FR Doc. E6–1407 Filed 2–1–06; 8:45 am]

BILLING CODE 3510–22–S

DEPARTMENT OF COMMERCE

National Oceanic and Atmospheric Administration

[I.D. 013006D]

Pacific Fishery Management Council; Public Meetings

AGENCY: National Marine Fisheries Service (NMFS), National Oceanic and Atmospheric Administration (NOAA), Commerce.

ACTION: Notice of public meetings.

SUMMARY: The Pacific Fishery Management Council's (Council) Coastal Pelagic Species Management Team (CPSMT) and Coastal Pelagic Species Advisory Subpanel (CPSAS) will hold joint and separate work sessions, focused on Krill management and other fishery-related matters, which are open to the public.

DATES: The CPSMT and the CPSAS will meet in a joint session on Wednesday, February 22, 2006, from 9 a.m. until 12 noon, and will meet separately from 1 p.m. until business for the day is completed.

ADDRESSES: The meetings will be held at NMFS Southwest Regional Office, 501 West Ocean Boulevard, Suite 4200, Long Beach, CA 90802, (562) 980–4000.

Council address: Pacific Fishery Management Council, 7700 NE Ambassador Place, Suite 200, Portland, OR 97220–1384.

FOR FURTHER INFORMATION CONTACT: Mr. Mike Burner, Pacific Fishery Management Council, telephone: (503) 820–2280.

SUPPLEMENTARY INFORMATION: The primary purpose of the joint session is to review a draft Environmental Assessment and Amendment 12 to the Coastal Pelagic Species (CPS) Fishery Management Plan regarding krill management. The CPSAS and CPSMT will also review the status of ongoing CPS fisheries and marine protected area issues. During separate afternoon sessions, the CPSAS and CPSMT will elect officers for 2006 and will develop recommendations for presentation to the Council at the March 2006 Council meeting. Additionally, the CPSMT will develop plans for completing the 2006 CPS Stock Assessment and Fishery Evaluation document.

Although non-emergency issues not contained in the meeting agenda may be discussed, those issues may not be the subject of formal action during this meeting. Action will be restricted to those issues specifically listed in this document and any issues arising after publication of this document that require emergency action under section 305(c) of the Magnuson-Stevens Fishery Conservation and Management Act, provided the public has been notified of the intent to take final action to address the emergency.

Special Accommodations

The meeting is physically accessible to people with disabilities. Requests for sign language interpretation or other auxiliary aids should be directed to Ms. Carolyn Porter at (503) 820–2280 at least 5 days prior to the meeting date.

Dated: January 30, 2006.

Tracey L. Thompson,

Acting Director, Office of Sustainable Fisheries, National Marine Fisheries Service.

[FR Doc. E6–1408 Filed 2–1–06; 8:45 am]

BILLING CODE 3510–22–S

DEPARTMENT OF DEFENSE

Office of the Secretary

Defense Science Board

AGENCY: Department of Defense.

ACTION: Notice of Advisory Committee Meetings.

SUMMARY: The Defense Science Board Task Force on Software Assurance will meet in closed session on February 23 and 24, 2006; at Science Applications International Corporation (SAIC), 4001 N. Fairfax Drive, Arlington, VA. This meeting is to chart the direction of the study and begin assessing the current capabilities and vulnerabilities of DoD software.

The mission of the Defense Science Board is to advise the Secretary of Defense and the Under Secretary of Defense for Acquisition, Technology & Logistics on scientific and technical matters as they affect the perceived needs of the Department of Defense. At these meetings, the Defense Science Board Task Force will: Assess the risk that DoD runs as a result of foreign influence on its software and to suggest technology and other measures to mitigate the risk.

In accordance with Section 10(d) of the Federal Advisory Committee Act, Public Law 92–463, as amended (5 U.S.C. App. II), it has been determined that these Defense Science Board Task Force meetings concern matters listed in 5 U.S.C. 552b(c)(1) and that, accordingly, the meetings will be closed to the public.

FOR FURTHER INFORMATION CONTACT: LCDR Clifton Phillips, USN, Defense Science Board, 3140 Defense Pentagon, Room 3C553, Washington, DC 20301–3140, via e-mail at *clifton.phillips@osd.mil,* or via phone at (703) 571–0083.

Dated: January 27, 2006.

Linda Bynum,

OSD Federal Register Liaison Officer, Department of Defense.

[FR Doc. 06–959 Filed 2–1–06; 8:45 am]

BILLING CODE 5001–06–M

DEPARTMENT OF DEFENSE

Office of the Secretary

Defense Science Board

AGENCY: Department of Defense.

ACTION: Notice of Advisory Committee meetings.

SUMMARY: The Defense Science Board Task Force on Technology Vectors will meet in closed session on February 15 and 16, 2006; at Strategic Analysis, Inc. (SAI), 3601 Wilson Boulevard, Suite 500, Arlington, VA. This meeting will be a plenary meeting used to map the study's direction and begin discussion on what will be the Technology Vectors DoD will need for the 21st century.

The mission of the Defense Science Board is to advise the Secretary of Defense and the Under Secretary of Defense for Acquisition, Technology & Logistics on scientific and technical matters as they affect the perceived needs of the Department of Defense. At these meetings, the Defense Science Board Task Force will: Review previous attempts by DoD to identify critical technologies in order to derive lessons that would help illuminate the current challenge; identify the National Security objectives for the 21st century and the operational missions that U.S. military will be called upon to support these objectives; identify new operational capabilities needed for the proposed missions; identify the critical science technology, and other related enablers of the desired capabilities; assess current S&T investment plans' relevance to the needed operational capabilities and enablers and recommend needed changes to the plans; identify mechanisms to accelerate and assure the transition of technology into U.S. military capabilities; and review and recommend changes as needed, the current processes by which national security objectives and needed operational capabilities are used to develop and prioritize science, technology, and other related enablers, and how those enablers are then developed.

In accordance with Section 10(d) of the Federal Advisory Committee Act, Public Law 92–463, as amended (5

U.S.C. App. II), it has been determined that these Defense Science Board Task Force meetings concern matters listed in 5 U.S.C. 552b(c)(1) and that, accordingly, the meetings will be closed to the public.

FOR FURTHER INFORMATION CONTACT: LCDR Clifton Phillips, USN, Defense Science Board, 3140 Defense Pentagon, Room 3C553, Washington, DC 20301–3140, via e-mail at *clifton.phillips@osd.mil*, or via phone at (703) 571–0083.

Dated: January 27, 2006.

Linda Bynum,

OSD Federal Register Liaison Officer, Department of Defense.

[FR Doc. 06–960 Filed 2–1–06; 8:45 am]

BILLING CODE 5001–06–M

DEPARTMENT OF DEFENSE

Department of the Air Force

Air University Board of Visitors; Notice of Meeting

ACTION: Notice of Meeting of Air University Board of Visitors.

SUMMARY: The purpose of the meeting is to give the board an opportunity to review Air University educational programs and to present to the Commander, a report of their findings and recommendations concerning these programs.

DATES: The Air University Board of Visitors will hold an open meeting on 2–5 April 2006. The first business session of each meeting will begin in the Air University Commander's Conference Room at Headquarters Air University, Maxwell Air Force Base, Alabama (5 seats available).

FOR FURTHER INFORMATION CONTACT: Dr. Dorothy Reed, Chief of Academic Affairs, Air University Headquarters, Maxwell Air Force Base, Alabama 36112–6335, at (334) 953–5159.

Bao-Anh Trinh,

Air Force Federal Register Liaison Officer.

[FR Doc. E6–1399 Filed 2–1–06; 8:45 am]

BILLING CODE 5001–05–P

DEPARTMENT OF DEFENSE

Department of the Air Force

Air Force Institute of Technology (AFIT) Subcommittee of the Air University Board of Visitors; Notice of Meeting

ACTION: Notice of meeting of the AFIT Subcommittee of the Air University Board of Visitors.

SUMMARY: The purpose of the meeting is to give the board an opportunity to review Air Force Institute of Technology's educational programs and to present to the Commandant a report of their findings and recommendations concerning these programs.

DATES: The AFIT Subcommittee of the Air University Board of Visitors will hold an open meeting on 12–14 March 2006, with the first business session beginning at 0830 in the Superintendent's Conference Room, Building 642, Wright-Patterson Air Force Base, Ohio (5 seats available).

FOR FURTHER INFORMATION CONTACT: Ms. Beverly Houtz, Academic Affairs Office, Air Force Institute of Technology, (937) 255–6565 ext 4424.

Bao-Anh Trinh,

GS–14, DAF, Air Force Federal Register Liaison Officer.

[FR Doc. E6–1400 Filed 2–1–06; 8:45 am]

BILLING CODE 5001–05–P

DEPARTMENT OF DEFENSE

Department of the Army; Corps of Engineers

Notice of Availability of the Final Supplement II to the Final EIS (FSII) for the Proposed New Water Supply Reservoir Located in Williamson and Johnson Counties, for the City of Marion, IL

AGENCY: U.S. Army Corps of Engineers, DoD.

ACTION: Notice of availability.

SUMMARY: The U.S. Army Corps of Engineers is issuing this notice to advise the public that the Final Supplement II to the Final Environmental Impact Statement has been completed for the City of Marion, Illinois, and is available for review and comment.

DATES: In accordance with the National Environmental Policy Act (NEPA), we have filed the FSII with the Environmental Protection Agency (EPA) for publication of their notice of availability in the **Federal Register**. The EPA notice officially starts the 30-day review period for this document. It is the goal of the Corps of Engineers to have the COE notice published on the same date as the EPA notice. However, if that does not occur, the date of the EPA notice will determine the closing date for comments on the FSII. Comments on the FSII must be submitted to the address below under **FOR FURTHER INFORMATION CONTACT** and must be received no later than 5 p.m. Eastern Standard Time, Monday, February 27, 2006.

ADDRESSES: The Final Supplement II to the Final EIS can be viewed online at *http://www.lrl.usace.army.mil/orf/default.asp* (follow the link to Notices/Illinois/Marion FSII Vol. I and Marion FSII Vol. II). Copies of the Final Supplement II to the Final Environmental Impact Statement are also available for review at the following library:

Marion Carnegie Library, 206 South Market Street, Marion, IL, 62959.

FOR FURTHER INFORMATION CONTACT: Mr. Greg McKay, Project Manager, Regulatory Branch, U.S. Army Corps of Engineers, Louisville District, P.O. Box 59, Louisville, KY 40201–0059, ATTN: CELRL–OP–FS, (502)–315–6685, Telephone: 502–315–6685.

SUPPLEMENTARY INFORMATION: The proposed action by the City of Marion is a new 1,172-acre water supply reservoir located in Williamson and Johnson Counties, Illinois, near the community of Creal Springs. The Lake of Egypt Water District has an agreement in principle with the City of Marion to purchase water if a new lake on Sugar Creek is built. Two pipelines would be constructed for transport of water for treatment.

As part of the Corps review process, this Final Supplement II to the Final Environmental Impact Statement (FSII) has been prepared. The Louisville District prepared a Draft EIS and released it to the public for comment in October 1994. A public hearing was held in December 1994. A Final EIS was prepared and released to the public for comment in July 1995. A Draft Supplement I was prepared and released to the public for comment in February 1996. A Final Supplement I to the Final EIS was prepared and released to the public for comment in May 1996. A Draft Supplement II was prepared and released to the public for comment in November 2000, with a public hearing held in March 2001.

This Final Supplement II to the Final EIS examines single source options as well as combinations of separate alternatives to satisfy current and future water needs of Marion and the Lake of

Egypt Water District as separate entities. This Final Supplement II incorporates the Draft and Final EIS, the Draft and Final Supplement I, and the Draft Supplement II by reference.

Dated: January 26, 2006.

David F. Dale, Jr.,

P.E., PMP, Deputy District Engineer.

[FR Doc. E6–1390 Filed 2–1–06; 8:45 am]

BILLING CODE 3710–92–P

DEPARTMENT OF EDUCATION

Office of Postsecondary Education; Overview Information; Training Program for Federal TRIO Programs (Training Program); Notice Inviting Applications for New Awards for Fiscal Year (FY) 2006

Catalog of Federal Domestic Assistance (CFDA) Number: 84.103A.

Dates: Applications Available: February 2, 2006.

Deadline for Transmittal of Applications: April 21, 2006.

Deadline for Intergovernmental Review: June 20, 2006.

Eligible Applicants: Institutions of higher education and other public and private nonprofit institutions and organizations.

Estimated Available Funds: $4,000,000.

Estimated Range of Awards: $300,000–$450,000.

Estimated Average Size of Awards: $425,000.

Maximum Award: We will reject any application that proposes a budget exceeding the maximum amount listed for each of the four absolute priorities, listed below, for a single budget period of 12 months:

- Priority 1: $450,000;
- Priority 2: $400,000;
- Priority 3: $450,000; and
- Priority 4: $400,000.

To be consistent with the goal of serving all regions of the country as provided in 34 CFR 642.33, successful applicants will be expected to provide training to at least 325 participants, unless we specifically approve another amount.

Estimated Number of Awards: 8–12.

Note: The Department is not bound by any estimates in this notice.

Project Period: 24 months.

Full Text of Announcement

I. Funding Opportunity Description

Purpose of Program: To improve the operation of projects funded under the Federal TRIO Programs, the Training Program provides grants to train staff and leadership personnel employed in, participating in, or preparing for employment in, projects funded under the TRIO Programs.

Priorities: In accordance with 34 CFR 75.105(b)(2)(iv) and 34 CFR 75.105(b)(2)(ii), these priorities are from section 402G(b) of the Higher Education Act of 1965, as amended (HEA), and the regulations for this program (34 CFR 642.34). Each successful applicant must provide at least one training session on each requisite topic listed within a specific priority that is tailored to the needs of TRIO staff with less than two years of TRIO project experience.

Each application must clearly identify the specific priority number for which a grant is requested, and must address each of the topics listed under that specific priority. An application for a grant under a specific priority should not include information concerning any other priority. For example, an application for a grant under Priority 1 should address only training to improve record keeping, reporting student and project performance, and evaluation of project performance as a means for designing and operating a model TRIO project.

Absolute Priorities: For FY 2006, these priorities are absolute priorities. Under 34 CFR 75.105(c)(3), we consider only applications that meet these priorities. These priorities are:

Priority 1. Training to improve: record keeping; reporting student and project performance; and, the evaluation of project performance in order to design and operate a model TRIO project.

Number of expected awards: 2–3.

Maximum award amount: $450,000.

Priority 2. Training on: Budget management and the legislative and regulatory requirements for operation of the Federal TRIO Programs.

Number of expected awards: 2–3.

Maximum award amount: $400,000.

Priority 3. Training on: Assessment of student needs; proven retention and graduation strategies; and the use of educational technology in order to design and operate a model TRIO project.

Number of expected awards: 2–3.

Maximum award amount: $450,000.

Priority 4. Training on: Student financial aid and college and university admissions policies and procedures.

Number of expected awards: 2–3.

Maximum award amount: $400,000.

Maximum number of applications for a priority: An applicant may submit only one application for a grant under each priority. If an applicant submits more than one application under a specific priority, we will accept only the first application submitted and we will reject all other applications.

Program Authority: 20 U.S.C. 1070a–11 and 1070a–17.

Applicable Regulations: (a) The Education Department General Administrative Regulations (EDGAR) in 34 CFR parts 74, 75, 77, 79, 80, 81, 82, 84, 85, 86, 97, 98 and 99.

(b) The regulations for this program in 34 CFR part 642.

Note: The regulations in 34 CFR part 79 apply to all applicants except federally recognized Indian tribes.

Note: The regulations in 34 CFR part 86 apply to institutions of higher education only.

II. Award Information

Type of Award: Discretionary grants.

Estimated Available Funds: $4,000,000.

Estimated Range of Awards: $300,000–$450,000.

Estimated Average Size of Awards: $425,000.

Maximum Award: We will reject any application that proposes a budget exceeding the maximum amount listed for each of the four absolute priorities, listed below, for a single budget period of 12 months:

- Priority 1: $450,000;
- Priority 2: $400,000;
- Priority 3: $450,000; and
- Priority 4: $400,000.

To be consistent with the goal of serving all regions of the country as provided in 34 CFR 642.33, successful applicants will be expected to provide training to at least 325 participants, unless we specifically approve another amount.

Estimated Number of Awards: 8–12.

Note: The Department is not bound by any estimates in this notice.

Project Period: 24 months.

III. Eligibility Information

1. *Eligible Applicants:* Institutions of higher education and other public and private nonprofit institutions and organizations.

2. *Cost Sharing or Matching:* This program does not involve cost sharing or matching.

3. *Other:* An applicant may submit only one application for a grant under each priority. Each application must clearly identify the specific priority number for which a grant is requested, and must address each of the topics listed under that specific priority. An application for a grant under a specific priority should not include information concerning any other priority.

To be consistent with the goal of serving all regions of the country as provided in 34 CFR 642.33, successful

applicants will be expected to provide training to at least 325 participants, unless we specifically approve another amount.

Each successful applicant also must provide at least one training session on each listed topic in a specific priority that is tailored to the needs of new project directors and TRIO staff with less than two years of TRIO project experience.

IV. Application and Submission Information

1. *Address to Request Application Package:* Britt Jung, U.S. Department of Education, 1990 K Street, NW., suite 7000, Washington, DC 20006–8510. Telephone: (202) 502–7600 or by e-mail: *TRIO@ed.gov.*

If you use a telecommunications device for the deaf (TDD), you may call the Federal Relay Service (FRS) at 1–800–877–8339.

Individuals with disabilities may obtain a copy of the application package in an alternative format (*e.g.*, Braille, large print, audiotape, or computer diskette) by contacting the program contact person listed in this section.

2. *Content and Form of Application Submission:* Requirements concerning the content of an application, together with the forms you must submit, are in the application package for this program.

Page Limit: The application narrative is where you, the applicant, address the selection criteria and priorities that reviewers use to evaluate your application. You must limit the section of the narrative that addresses the selection criteria and priorities to the equivalent of no more than 50 pages, using the following standards:

- A ''page'' is 8.5″ x 11″, on one side only, with 1″ margins at the top, bottom, and both sides. Page numbers and an identifier may be within the 1″ margin.
- Double space (no more than three lines per vertical inch) all text in the application narrative, *except* titles, headings, footnotes, quotations, references, captions and all text in charts, tables, and graphs.
- Use one of the following fonts: Times New Roman, Courier, Courier New, or Arial. Applications submitted in any other font (including Times Roman and Arial Narrow) will be rejected.
- Use 12-point font.

The page limit does not apply to Part I, the application for federal assistance face sheet (SF 424); Part II, the budget information summary form (ED Form 524); and Part IV, the assurances and certifications. The page limit also does not apply to a table of contents. If you include any attachments or appendices, these items will be counted as part of the Program Narrative (Part III) for purposes of the page limit requirement. You must include your complete response to the selection criteria and priorities in the program narrative.

We will reject your application if—

- You apply these standards and exceed the page limit; or
- You apply other standards and exceed the equivalent of the page limit.

3. *Submission Dates and Times:*

Applications Available: February 2, 2006.

Deadline for Transmittal of Applications: April 21, 2006.

Applications for grants under this program must be submitted electronically using the Grants.gov Apply site (*Grants.gov*). For information (including dates and times) about how to submit your application electronically or by mail or hand delivery if you qualify for an exception to the electronic submission requirement, please refer to Section IV. 6. *Other Submission Requirements* in this notice.

We do not consider an application that does not comply with the deadline requirements.

Deadline for Intergovernmental Review: June 20, 2006.

4. *Intergovernmental Review:* This program is subject to Executive Order 12372 and the regulations in 34 CFR part 79. Information about Intergovernmental Review of Federal Programs under Executive Order 12372 is in the application package for this program.

5. *Funding Restrictions:* We reference the regulations outlining funding restrictions in the *Applicable Regulations* section of this notice.

6. *Other Submission Requirements:* Applications for grants under this program must be submitted electronically unless you qualify for an exception to this requirement in accordance with the instructions in this section.

a. *Electronic Submission of Applications.* Applications for grants under the Training Program—CFDA Number 84.103A—must be submitted electronically using the Grants.gov Apply site at: *http://www.grants.gov.* Through this site, you will be able to download a copy of the application package, complete it offline, and then upload and submit your application. You may not e-mail an electronic copy of a grant application to us.

We will reject your application if you submit it in paper format unless, as described elsewhere in this section, you qualify for one of the exceptions to the electronic submission requirement *and* submit, no later than two weeks before the application deadline date, a written statement to the Department that you qualify for one of these exceptions. Further information regarding calculation of the date that is two weeks before the application deadline date is provided later in this section under *Exception to Electronic Submission Requirement.*

You may access the electronic grant application for the Training Program at: *http://www.grants.gov.* You must search for the downloadable application package for this program by the CFDA number. Do not include the CFDA number's alpha suffix in your search.

Please note the following:

- When you enter the Grants.gov site, you will find information about submitting an application electronically through the site, as well as the hours of operation.
- Applications received by Grants.gov are time and date stamped. Your application must be fully uploaded and submitted, and must be date/time stamped by the Grants.gov system no later than 4:30 p.m., Washington, DC time, on the application deadline date. Except as otherwise noted in this section, we will not consider your application if it is date/time stamped by the Grants.gov system later than 4:30 p.m., Washington, DC time, on the application deadline date. When we retrieve your application from Grants.gov, we will notify you if we are rejecting your application because it was date/time stamped by the Grants.gov system after 4:30 p.m., Washington, DC time, on the application deadline date.
- The amount of time it can take to upload an application will vary depending on a variety of factors including the size of the application and the speed of your Internet connection. Therefore, we strongly recommend that you do not wait until the application deadline date to begin the submission process through Grants.gov.
- You should review and follow the Education Submission Procedures for submitting an application through Grants.gov that are included in the application package for this program to ensure that you submit your application in a timely manner to the Grants.gov system. You can also find the Education Submission Procedures pertaining to Grants.gov at: *http://e-Grants.ed.gov/help/GrantsgovSubmissionProcedures.pdf.*
- To submit your application via Grants.gov, you must complete all the steps in the Grants.gov registration process (see *http://www.grants.gov/*

GetStarted). These steps include (1) registering your organization, (2) registering yourself as an Authorized Organization Representative (AOR), and (3) getting authorized as an AOR by your organization. Details on these steps are outlined in the Grants.gov 3-Step Registration Guide (see *http://www.grants.gov/assets/GrantsgovCoBrandBrochure8X11.pdf*). You also must provide on your application the same D–U–N–S Number used with this registration. Please note that the registration process may take five or more business days to complete, and you must have completed all registration steps to allow you to successfully submit an application via Grants.gov.

- You will not receive additional point value because you submit your application in electronic format, nor will we penalize you if you qualify for an exception to the electronic submission requirement, as described elsewhere in this section, and submit your application in paper format.
- You must submit all documents electronically including all information typically included on the Application for Federal Education Assistance (SF 424), Budget Information—Non-Construction Programs (ED 524), and all necessary assurances and certifications. You must attach any narrative sections of your application as files in a .DOC (document), .RTF (rich text), or .PDF (Portable Document) format. If you upload a file type other than the three file types specified above or submit a password protected file, we will not review that material.
- Your electronic application must comply with any page limit requirements described in this notice.
- After you electronically submit your application, you will receive an automatic acknowledgment from Grants.gov that contains a Grants.gov tracking number. The Department will retrieve your application from Grants.gov and send you a second confirmation by e-mail that will include a PR/Award number (an ED-specified identifying number unique to your application).
- We may request that you provide us original signatures on forms at a later date.

Application Deadline Date Extension in Case of Technical Issues with the Grants.gov System: If you are prevented from electronically submitting your application on the application deadline date because of technical problems with the Grants.gov system, we will grant you an extension until 4:30 p.m., Washington, DC time, the following business day to enable you to transmit your application electronically, or by hand delivery. You also may mail your application by following the mailing instructions as described elsewhere in this notice. If you submit an application after 4:30 p.m., Washington, DC time, on the deadline date, please contact the person listed elsewhere in this notice under **FOR FURTHER INFORMATION CONTACT**, and provide an explanation of the technical problem you experienced with Grants.gov, along with the Grants.gov Support Desk Case Number (if available). We will accept your application if we can confirm that a technical problem occurred with the Grants.gov system and that that problem affected your ability to submit your application by 4:30 p.m., Washington, DC time, on the application deadline date. The Department will contact you after a determination is made on whether your application will be accepted.

Note: Extensions referred to in this section apply only to the unavailability of or technical problems with the Grants.gov system. We will not grant you an extension if you failed to fully register to submit your application to Grants.gov before the deadline date and time, or if the technical problem you experienced is unrelated to the Grants.gov system.

Exception to Electronic Submission Requirement: You qualify for an exception to the electronic submission requirement, and may submit your application in paper format, if you are unable to submit an application through the Grants.gov system because—

- You do not have access to the Internet; or
- You do not have the capacity to upload large documents to the Grants.gov system; *and*
- No later than two weeks before the application deadline date (14 calendar days or, if the fourteenth calendar day before the application deadline date falls on a Federal holiday, the next business day following the Federal holiday), you mail or fax a written statement to the Department, explaining which of the two grounds for an exception prevent you from using the Internet to submit your application. If you mail your written statement to the Department, it must be postmarked no later than two weeks before the application deadline date. If you fax your written statement to the Department, we must receive the faxed statement no later than two weeks before the application deadline date.

Address and mail or fax your statement to: Dr. Linda Byrd-Johnson, U.S. Department of Education, 1990 K Street, NW., suite 7000, Washington, DC 20006–8510. FAX: (202) 502–7857.

Your paper application must be submitted in accordance with the mail or hand delivery instructions described in this notice.

b. *Submission of Paper Applications by Mail.* If you qualify for an exception to the electronic submission requirement, you may mail (through the U.S. Postal Service or a commercial carrier) your application to the Department. You must mail the original and two copies of your application, on or before the application deadline date, to the Department at the applicable following address:

By mail through the U.S. Postal Service: U.S. Department of Education, Application Control Center, Attention: (CFDA Number 84.103A), 400 Maryland Avenue, SW., Washington, DC 20202–4260; or

By mail through a commercial carrier: U.S. Department of Education, Application Control Center—Stop 4260, Attention: (CFDA Number 84.103A), 7100 Old Landover Road, Landover, MD 20785–1506.

Regardless of which address you use, you must show proof of mailing consisting of one of the following:

(1) A legibly dated U.S. Postal Service postmark,

(2) A legible mail receipt with the date of mailing stamped by the U.S. Postal Service,

(3) A dated shipping label, invoice, or receipt from a commercial carrier, or

(4) Any other proof of mailing acceptable to the Secretary of the U.S. Department of Education.

If you mail your application through the U.S. Postal Service, we do not accept either of the following as proof of mailing:

(1) A private metered postmark, or

(2) A mail receipt that is not dated by the U.S. Postal Service.

If your application is postmarked after the application deadline date, we will not consider your application.

Note: The U.S. Postal Service does not uniformly provide a dated postmark. Before relying on this method, you should check with your local post office.

c. *Submission of Paper Applications by Hand Delivery.* If you qualify for an exception to the electronic submission requirement, you (or a courier service) may deliver your paper application to the Department by hand. You must deliver the original and two copies of your application, by hand, on or before the application deadline date, to the Department at the following address: U.S. Department of Education, Application Control Center, Attention: (CFDA Number 84.103A), 550 12th Street, SW., Room 7041, Potomac Center Plaza, Washington, DC 20202–4260.

The Application Control Center accepts hand deliveries daily between 8 a.m. and 4:30 p.m., Washington, DC time, except Saturdays, Sundays, and Federal holidays.

Note for Mail or Hand Delivery of Paper Applications: If you mail or hand deliver your application to the Department:

(1) You must indicate on the envelope and—if not provided by the Department—in Item 4 of the Application for Federal Education Assistance (SF 424) the CFDA number—and suffix letter, if any—of the competition under which you are submitting your application.

(2) The Application Control Center will mail a grant application receipt acknowledgment to you. If you do not receive the grant application receipt acknowledgment within 15 business days from the application deadline date, you should call the U.S. Department of Education Application Control Center at (202) 245–6288.

V. Application Review Information

1. *Selection Criteria:* The selection criteria for this program competition are in 34 CFR 642.31 and are listed in the application package.

Note: For the FY 2006 competition, the Secretary has identified ''need'' for training projects through the selection of four absolute priorities.

Therefore, the Secretary will consider that an applicant has satisfied the ''need'' criterion listed in 34 CFR 642.31(f) by applying for a grant under one of these priorities, and applicants do not have to address this criterion. The application package contains instructions on addressing the remaining selection criteria.

2. *Review and Selection Process:* A panel of non-federal readers will review each application in accordance with the selection criteria, pursuant to 34 CFR 642.30(a). The individual scores of the readers will be added and the sum divided by the number of readers to determine the reader score received in the review process. In accordance with 34 CFR 642.32, the Secretary will award prior experience points to applicants that have conducted a TRIO Training Program project within the last three fiscal years, based on their documented experience. Prior experience points, if any, will be added to the application's reader score to determine the total score for each application.

Pursuant to section 402A(c)(3) of the HEA, the Secretary will not make awards in the order of the scores received by the application in the review process and adjusted for prior experience. Instead, within each specific absolute priority for which a grant is requested, the Secretary will select an application for funding in the order of the reader score received by the application in the review process.

Within each specific priority, if there are insufficient funds to fund all applications at the next reader score, the Secretary will use the reader score received by the application in the review process, adjusted for prior experience, to make awards. In the event a tie still exists, the Secretary will select for funding the applicant that has the greatest capacity to provide training in all regions of the Nation in order to assure accessibility to the greatest number of prospective training participants, consistent with 34 CFR 642.33.

VI. Award Administration Information

1. *Award Notices:* If your application is successful, we notify your U.S. Representative and U.S. Senators and send you a Grant Award Notice (GAN). We may also notify you informally.

If your application is not evaluated or not selected for funding, we notify you.

2. *Administrative and National Policy Requirements:* We identify administrative and national policy requirements in the application package and reference these and other requirements in the *Applicable Regulations* section of this notice.

We reference the regulations outlining the terms and conditions of an award in the *Applicable Regulations* section of this notice and include these and other specific conditions in the GAN. The GAN also incorporates your approved application as part of your binding commitments under the grant.

3. *Reporting:* At the end of your project period, you must submit a final performance report, including financial information as directed by the Secretary. You must also submit an annual performance report that provides the most current performance and financial expenditures information as specified by the Secretary in 34 CFR 75.118.

4. *Performance Measures:* The success of the Training Program is measured by its cost-effectiveness, based on the percentage of TRIO personnel receiving training each year and by the percentage of those receiving training who rate the training as highly useful. All grantees will be required to submit an annual performance report documenting their success in training TRIO personnel, including the average cost per trainee and the trainees' evaluations of the effectiveness of the training provided.

VII. Agency Contacts

FOR FURTHER INFORMATION CONTACT: Britt Jung (If unavailable, contact Dr. Linda Byrd-Johnson), U.S. Department of Education, 1990 K Street, NW., suite 7000, Washington, DC 20006–8510. Telephone: (202) 502–7600 or by e-mail: *TRIO@ed.gov.*

If you use a telecommunications device for the deaf (TDD), you may call the Federal Relay Service (FRS) at 1–800–877–8339.

Individuals with disabilities may obtain this document in an alternative format (*e.g.*, Braille, large print, audiotape, or computer diskette) on request to the program contact person listed in this section.

VIII. Other Information

Electronic Access to This Document: You may view this document, as well as all other documents of this Department published in the **Federal Register,** in text or Adobe Portable Document Format (PDF) on the Internet at the following site: *http://www.ed.gov/news/fedregister.*

To use PDF you must have Adobe Acrobat Reader, which is available free at this site. If you have questions about using PDF, call the U.S. Government Printing Office (GPO); toll free, at 1–888–293–6498; or in the Washington, DC area at (202) 512–1530.

Note: The official version of this document is the document published in the **Federal Register.** Free Internet access to the official edition of the **Federal Register** and the Code of Federal Regulations is available on GPO Access at: *http://www.gpoaccess.gov/nara/index.html.*

Dated: January 27, 2006.

Sally L. Stroup,

Assistant Secretary for Postsecondary Education.

[FR Doc. E6–1421 Filed 2–1–06; 8:45 am]

BILLING CODE 4000–01–P

DEPARTMENT OF ENERGY

[Docket No. EA–306]

Application to Export Electric Energy; MAG Energy Solutions Inc.

AGENCY: Office of Electricity Delivery & Energy Reliability, DOE.

ACTION: Notice of application.

SUMMARY: MAG Energy Solutions Inc. (MAG E.S.) has applied for authority to transmit electric energy from the United States to Canada pursuant to section 202(e) of the Federal Power Act.

DATES: Comments, protests or requests to intervene must be submitted on or before March 6, 2006.

ADDRESSES: Comments, protests or requests to intervene should be

addressed as follows: Office of Electricity Delivery & Energy Reliability (Mail Code OE–20), U.S. Department of Energy, 1000 Independence Avenue, SW., Washington, DC 20585–0350 (FAX 202–586–5860).

FOR FURTHER INFORMATION CONTACT: Ellen Russell (Program Office) 202–586–9624 or Michael Skinker (Program Attorney) 202–586–2793.

SUPPLEMENTARY INFORMATION: Exports of electricity from the United States to a foreign country are regulated and require authorization under section 202(e) of the Federal Power Act (FPA) (16 U.S.C. 824a(e)).

On December 14, 2005, the Department of Energy (DOE) received an application from MAG E.S. to transmit electric energy from the United States to Canada. MAG E.S. is a Canadian corporation with its principal place of business in Montreal, Quebec. MAG E.S. has requested an electricity export authorization with a 5-year term. MAG E.S. does not own or control any transmission or distribution assets, nor does it have a franchised service area. The electric energy which MAG E.S. proposes to export to Canada would be purchased from electric utilities and Federal power marketing agencies within the U.S.

MAG E.S. will arrange for the delivery of exports to Canada over the international transmission facilities owned by Basin Electric Power Cooperative, Booneville Power Administration, Eastern Maine Electric Cooperative, International Transmission Co., Joint Owners of the Highgate Project, Long Sault, Inc., Maine Electric Power Company, Maine Public Service Company, Minnesota Power, Inc., Minnkota Power Cooperative, Inc., New York Power Authority, Niagara Mohawk Power Corp., Northern States Power Company and Vermont Electric Transmission Co.

The construction, operation, maintenance, and connection of each of the international transmission facilities to be utilized by MAG E.S. has previously been authorized by a Presidential permit issued pursuant to Executive Order 10485, as amended.

Procedural Matters: Any person desiring to become a party to this proceeding or to be heard by filing comments or protests to this application should file a petition to intervene, comment or protest at the address provided above in accordance with §§ 385.211 or 385.214 of the FERC's Rules of Practice and Procedures (18 CFR 385.211, 385.214). Fifteen copies of each petition and protest should be filed with DOE on or before the date listed above.

Comments on the MAG E.S. application to export electric energy to Canada should be clearly marked with Docket EA–306. Additional copies are to be filed directly with Martin Gauthier, Director, MAG E.S. Energy Solutions Inc., 486 Ste-Catherine W, #402, Montreal, QC, Canada H3B 1A6.

A final decision will be made on this application after the environmental impacts have been evaluated pursuant to the National Environmental Policy Act of 1969, and a determination is made by the DOE that the proposed action will not adversely impact on the reliability of the U.S. electric power supply system.

Copies of this application will be made available, upon request, for public inspection and copying at the address provided above or by accessing the program's Home Page at *http://www.electricity.doe.gov.* Upon reaching the Home page, select ''Divisions,'' then ''Permitting Siting & Analysis,'' then ''Electricity Imports/Exports,'' and then ''Pending Proceedings'' from the options menus.

Issued in Washington, DC, on January 26, 2006.

Anthony J. Como,

Director, Permitting and Siting, Office of Electricity Delivery and Energy Reliability.

[FR Doc. E6–1392 Filed 2–1–06; 8:45 am]

BILLING CODE 6450–01–P

DEPARTMENT OF ENERGY

Notice of Intent To Prepare the Tank Closure and Waste Management Environmental Impact Statement for the Hanford Site, Richland, WA

AGENCY: Department of Energy.

ACTION: Notice of intent.

SUMMARY: The U.S. Department of Energy (DOE) announces its intent to prepare a new environmental impact statement (EIS) for its Hanford Site (Hanford) near Richland, Washington, pursuant to the National Environmental Policy Act of 1969 (NEPA) and its implementing regulations at 40 CFR Parts 1500–1508 and 10 CFR Part 1021. The new EIS, to be titled the *Tank Closure and Waste Management Environmental Impact Statement for the Hanford Site, Richland, Washington* (TC & WM EIS), will implement a Settlement Agreement announced on January 9, 2006, among DOE, the Washington State Department of Ecology (Ecology) and the State of Washington Attorney General's office. The Agreement serves as settlement of NEPA claims in the case *State of Washington* v. *Bodman* (Civil No. 2:03–cv–05018–AAM), which addressed the *Final Hanford Site Solid (Radioactive and Hazardous) Waste Program EIS, Richland, Washington* (HSW EIS, DOE/EIS–0286, January 2004).

Ecology will continue its role as a Cooperating Agency in the preparation of the TC & WM EIS. Ecology already was acting in that capacity during the ongoing preparation of the *EIS for Retrieval, Treatment and Disposal of Tank Waste and Closure of the Single-Shell Tanks at the Hanford Site, Richland, Washington* (TC EIS, DOE/EIS–0356, Notice of Intent [NOI] at 68 FR 1052, January 8, 2003). The TC & WM EIS will revise, update and reanalyze groundwater impacts previously addressed in the HSW EIS. That is, the TC & WM EIS will provide a single, integrated analysis of groundwater at Hanford for all waste types addressed in the HSW EIS and the TC EIS. As a result, the TC & WM EIS will include a reanalysis of onsite disposal alternatives for Hanford's low-level radioactive waste (LLW) and mixed low-level radioactive waste (MLLW) and LLW and MLLW from other DOE sites. The TC & WM EIS will revise and update other potential impact areas previously addressed in the HSW EIS as appropriate. Finally, the TC & WM EIS will incorporate existing analyses from the HSW EIS that do not affect and are not directly affected by the waste disposal alternatives after review or revision as appropriate. DOE will continue its ongoing analysis of alternatives for the retrieval, treatment, storage, and disposal of underground tank wastes and closure of underground single-shell tanks (SST). In addition, DOE plans to include the ongoing *Fast Flux Test Facility Decommissioning EIS* (FFTF EIS, DOE/EIS–0364, NOI at 69 FR 50178, August 13, 2004) in the scope of the new TC & WM EIS, in order to provide an integrated presentation of currently foreseeable activities related to waste management and cleanup at Hanford.

In accordance with the Settlement Agreement, DOE will not ship offsite waste to Hanford for storage, processing, or disposal until a Record of Decision (ROD) is issued pursuant to the TC & WM EIS, except under certain limited exemptions as provided in the Settlement Agreement.

DOE is soliciting comments on the proposed scope of the new TC & WM EIS. Comments previously submitted in response to the 2003 NOI for the TC EIS and the 2004 NOI for the FFTF EIS are being considered and need not be resubmitted.

DATES: DOE invites Federal agencies, American Indian tribal nations, state and local governments, and the public to comment on the scope of the planned TC & WM EIS. DOE will consider all comments received by March 6, 2006, as well as comments received after that date to the extent practicable. DOE plans to hold public meetings at the following locations:

Hood River, Oregon; February 21, 2006.

Portland, Oregon; February 22, 2006.

Seattle, Washington; February 23, 2006.

Richland, Washington, February 28, 2006.

The public meetings will address the scope of the planned TC & WM EIS. DOE will provide additional notification of the meeting times and locations through newspaper advertisements and other appropriate media.

ADDRESSES: To submit comments on the scope of the TC & WM EIS or to request copies of the references listed herein, including references listed in Appendix A, contact: Mary Beth Burandt, Document Manager, Office of River Protection, U.S. Department of Energy, Post Office Box 450, Mail Stop H6–60, Richland, WA 99352. Electronic mail: *TC&WMEIS@saic.com.* Fax: 509–376–3661. Telephone and voice mail: 509–373–9160.

FOR FURTHER INFORMATION CONTACT: For information on DOE's NEPA process, contact: Carol Borgstrom, Director, Office of NEPA Policy and Compliance (EH–42), U.S. Department of Energy, 1000 Independence Avenue, SW., Washington, DC 20585. Telephone 202–586–4600, or leave a message at 1–800–472–2756.

This NOI will be available on DOE's NEPA Web site at *http://www.eh.doe.gov/nepa* and the TC & WM EIS Web site at *http://www.hanford.gov/orp/* (click on Public Involvement).

SUPPLEMENTARY INFORMATION:

I. Background

The Hanford Site is located in southeastern Washington State along the Columbia River, and is approximately 586 square miles in size. Hanford's mission included defense-related nuclear research, development, and weapons production activities from the early 1940s to approximately 1989. During that period, Hanford operated a plutonium production complex with nine nuclear reactors and associated processing facilities. These activities created a wide variety of chemical and radioactive wastes. Hanford's mission now is focused on the cleanup of those wastes and ultimate closure of Hanford. To this end, DOE manages several types of radioactive wastes at Hanford: (1) High-level radioactive waste (HLW) as defined under the Nuclear Waste Policy Act [42 U.S.C. 10101]; (2) transuranic (TRU) waste, which is waste containing alpha-particle-emitting radionuclides with atomic numbers greater than uranium (*i.e.*, 92) and half-lives greater than 20 years in concentrations greater than 100 nanocuries per gram of waste; (3) LLW, which is radioactive waste that is neither HLW nor TRU waste; and (4) MLLW, which is LLW containing hazardous constituents as defined under the Resource Conservation and Recovery Act of 1976 (RCRA, 42 U.S.C. 6901 *et seq.*).

At present, DOE is constructing a Waste Treatment Plant (WTP) in the 200-East Area of the site. The WTP will separate waste stored in Hanford's underground tanks into HLW and low-activity waste (LAW) fractions. HLW will be treated in the WTP and stored at Hanford until it can be shipped to the proposed repository at Yucca Mountain, Nevada. Immobilized LAW waste would be treated in the WTP and disposed of at Hanford as decided in the ROD issued in 1997 (62 FR 8693), pursuant to the *Tank Waste Remediation System, Hanford Site, Richland, Washington, Final EIS* (TWRS EIS, DOE/EIS–0189, August 1996). DOE is processing Hanford's contact-handled TRU waste (which does not require special protective shielding) for shipment to the Waste Isolation Pilot Plant (WIPP) near Carlsbad, New Mexico, consistent with the 1998 RODs (63 FR 3624 and 63 FR 3629) for treatment and disposal of TRU waste under the *Final Waste Management Programmatic EIS for Managing Treatment, Storage, and Disposal of Radioactive and Hazardous Waste* (WM PEIS, DOE/EIS–0200) and the *Waste Isolation Pilot Plant Disposal Phase Final Supplemental Environmental Impact Statement* (WIPP SEIS-II, DOE/EIS–0026–S–2, September 1997). DOE is disposing of Hanford's LLW and MLLW onsite, consistent with the ROD for treatment and disposal of these wastes under the WM PEIS (65 FR 10061). This ROD also designates Hanford as a regional disposal site for LLW and MLLW from other DOE sites.

In January 2003, DOE issued an NOI (68 FR 1052) to prepare the TC EIS (DOE/EIS–0356). The proposed scope of the TC EIS included closure of the 149 underground SSTs and newly available information on supplemental treatment for the LAW from all 177 tanks, which contain a total of approximately 53 million gallons of waste.

In March 2003, Ecology initiated litigation on issues related to importation, treatment, and disposal of radioactive and hazardous waste generated offsite as a result of nuclear defense and research activities. The Court enjoined shipment of offsite TRU waste to Hanford for processing and storage pending shipment to WIPP.

In January 2004, DOE issued the HSW EIS and a ROD (69 FR 39449), which addressed ongoing solid waste management operations, and announced DOE's decision to dispose of Hanford and a limited volume of offsite LLW and MLLW in a new Integrated Disposal Facility in the 200-East Area of Hanford. DOE also decided to continue sending Hanford's MLLW offsite for treatment and to modify Hanford's T-Plant for processing remote-handled TRU waste and MLLW (which require protective shielding).

Ecology amended its March 2003 complaint in 2004, challenging the adequacy of the HSW EIS analysis of offsite waste importation. In May 2005, the Court granted a limited discovery period, continuing the injunction against shipping offsite wastes to Hanford, including LLW and MLLW (*State of Washington* v. *Bodman* [Civil No. 2:03–cv–05018–AAM]). In July 2005, while preparing responses to discovery requests from Ecology, Battelle Memorial Institute, DOE's contractor who assisted in preparing the HSW EIS, advised DOE of several differences in groundwater analyses between the HSW EIS and its underlying data.

DOE promptly notified the Court and the State and, in September 2005, convened a team of DOE experts in quality assurance and groundwater analysis, as well as transportation and human health and safety impacts analysis, to conduct a quality assurance review of the HSW EIS. The team completed its *Report of the Review of the Hanford Solid Waste Environmental Impact Statement* (EIS) *Data Quality, Control and Management Issues*, January 2006 (hereafter referred to as the Quality Review).

Because both Ecology and DOE have a shared interest in the effective cleanup of Hanford, DOE and Ecology announced a Settlement Agreement ending the NEPA litigation on January 9, 2006. The Agreement is intended to resolve Ecology's concerns about HSW EIS groundwater analyses and to address other concerns about the HSW EIS, including those identified in the *Quality Review.*

The Agreement calls for an expansion of the TC EIS to provide a single, integrated set of analyses that will include all waste types analyzed in the HSW EIS (LLW, MLLW, and TRU

waste). The expanded EIS will be renamed the TC & WM EIS. Pending finalization of the TC & WM EIS, the HSW EIS will remain in effect to support ongoing waste management activities at Hanford (including transportation of TRU waste to WIPP) in accordance with applicable regulatory requirements. The Agreement also stipulates that when the TC & WM EIS has been completed, it will supersede the HSW EIS. Until that time, DOE will not rely on HSW EIS groundwater analyses for decision-making, and DOE will not import offsite waste to Hanford, with certain limited exemptions as specified in the Agreement.

DOE and Ecology have mutual responsibilities for accomplishing cleanup of Hanford, as well as continuing ongoing waste management activities consistent with applicable Federal and state laws and regulations. *The Hanford Federal Facility Agreement and Consent Order* (also called the Tri-Party Agreement [TPA]) among the state, DOE, and the U.S. Environmental Protection Agency (EPA) contains various enforceable milestones that apply to waste management activities. DOE also is required to comply with applicable requirements of RCRA and the state's Hazardous Waste Management Act of 1976 as amended (Chapter 70.105 Revised Code of Washington). To carry out proposals for future actions and obtain necessary permits, each agency must comply with the applicable provisions of NEPA and the Washington State Environmental Policy Act (SEPA) respectively. The agencies have revised their Memorandum of Understanding for the TC EIS (effective March 25, 2003), which identified Ecology as a Cooperating Agency in the preparation of the TC EIS. The Memorandum of Understanding revision is consistent with the Settlement Agreement and provides for Ecology's continuing participation as a Cooperating Agency in preparation of the TC & WM EIS to assist both agencies in meeting their respective responsibilities under NEPA and SEPA.

II. Purpose and Need for Action

Recognizing the potential risks to human health and the environment from Hanford tank wastes, DOE needs to retrieve waste from the 149 SSTs and 28 double-shell tanks (DST), treat and dispose of the waste, and close the SST farms in a manner that complies with Federal and Washington State requirements. Some waste from tanks and LLW and MLLW from Hanford and other DOE sites that do not have appropriate facilities must be disposed of to facilitate cleanup of Hanford and these sites.

III. Proposed Action

DOE proposes to retrieve and treat waste from 177 underground tanks and ancillary equipment and dispose of this waste in compliance with applicable regulatory requirements. Vitrified HLW waste would be stored onsite until it can be disposed of in the proposed repository at Yucca Mountain. DOE proposes to provide additional treatment capacity for the tank LAW that can supplement the planned WTP capacity in fulfillment of DOE's obligations under the TPA in as timely a manner as possible. DOE would dispose of Hanford's immobilized LAW, LLW and MLLW, and LLW and MLLW from other DOE sites, in lined trenches onsite. These trenches would be closed in accordance with applicable regulatory requirements.

DOE also proposes to complete the final decontamination and decommissioning of the FFTF. DOE decided, in January 2001, (ROD at 66 FR 7877) that the permanent closure of FFTF was to be resumed with no new missions, based on the *Final Programmatic Environmental Impact Statement for Accomplishing Expanded Civilian Nuclear Energy Research and Development and Isotope Production Missions in the United States, Including the Role of the Fast Flux Test Facility (DOE/EIS–0310, December 2000).*

IV. Proposed Scope of the TC & WM EIS

In accordance with the Settlement Agreement, DOE intends to prepare a single, comprehensive EIS addressing tank waste retrieval, treatment, storage, and disposal; tank closure; and management of all waste types analyzed in the HSW EIS as an integrated document for public and agency review and reference. The TC & WM EIS will update, revise, or reanalyze resource areas (such as groundwater and transportation) from the HSW EIS as necessary to make them current and reflect the waste inventories and analytical assumptions being used for environmental impact assessment in the TC & WM EIS. All updated analyses would be included in the revised quantitative groundwater and other cumulative impact analyses in the TC & WM EIS.

The proposed scope of the TC & WM EIS includes alternatives for onsite disposal of LLW, MLLW, and LAW; transportation of offsite LLW and MLLW to Hanford for disposal; and current or revised information for ongoing operations, such as those involving Hanford's Central Waste Complex, that were included in the HSW EIS.

DOE proposes to retain all of the scope identified in the 2003 NOI for the TC EIS as modified by public scoping comments. Proposed modifications to the alternatives identified in the 2003 NOI are provided in Section VI. That is, the new TC & WM EIS would address management of the approximately 53 million gallons of waste stored in 149 underground SSTs (ranging in capacity from approximately 55,000 to 1 million gallons) and 28 underground DSTs (ranging in capacity from approximately 1 to 1.16 million gallons) grouped in 18 tank farms, and approximately 60 smaller miscellaneous underground storage tanks, along with ancillary equipment.

DOE proposes to retain all of the scope identified in its August 2004 NOI to evaluate alternatives for the final disposition of the FFTF and proposes to integrate that scope into the TC & WM EIS. The TC & WM EIS will thus provide an integrated presentation of currently foreseeable activities related to waste management and cleanup at Hanford.

V. Potential Decisions To Be Made

DOE plans to make decisions on the following topics.

- *Retrieval of Tank Waste*—A reasonable waste retrieval range is comprised of three levels: 90 percent, 99 percent, and 99.9 percent. The 99 percent retrieval is the goal established by the TPA (Milestone M–45–00); 90 percent retrieval evaluates a risk analysis of the tank farms as defined in the M–45–00, Appendix H, process; and 99.9 percent retrieval reflects uses of multiple retrieval technologies to support clean closure of the tank farms.
- *Treatment of Tank Waste*—WTP waste treatment capability can be augmented by supplemental treatment technologies and constructing new treatment facilities that are part of, or separate from, the WTP. The two primary choices that could fulfill DOE's TPA commitments are to treat all waste in an expanded WTP or provide supplemental treatment to be used in conjunction with, but separate from, the WTP. DOE has conducted preliminary tests on three supplemental treatment technologies—cast stone (a form of grout), steam reforming, and bulk vitrification—to determine if one or more could be used to provide the additional, supplemental waste treatment capability needed to complete waste treatment.
- *Disposal of Treated Tank Waste*—Onsite disposal includes treated tank waste such as immobilized LAW and

waste generated from closure activities that meets onsite disposal criteria; the decision to be made involves the onsite location of disposal facilities. Decisions to be made related to offsite disposal include the length of time and facilities required for storage of immobilized high-level radioactive waste (IHLW) prior to disposal at the proposed Yucca Mountain repository.

• *Storage of Tank Waste*—Depending on the alternative being analyzed, storing tank waste for different lengths of time may be necessary. This may require the construction, operation, and deactivation of waste transfer infrastructures, including waste receiver facilities (below-grade lag storage and minimal waste treatment facilities), waste transfer line upgrades, and new or replacement DSTs. Also depending on the alternative, construction and operation of additional immobilized HLW storage vaults, melter pads, and TRU waste storage facilities needed to store treated tank waste.

• *Closure of SSTs*—Decisions to be made include closing the SSTs by clean closure, selective clean closure/landfill closure, and landfill closure with or without any soil contamination removal. Decisions regarding barriers (engineered modified RCRA Subtitle C barrier or Hanford barrier) to prevent water intrusion will be made. A closure configuration for the original 28 DSTs will be evaluated in the TC & WM EIS for engineering reasons related to barrier placement for the SSTs. This evaluation also is provided to aid Ecology in evaluating the impacts which might result in closing DSTs to a debris rule standard. However, DOE is deferring a decision on closure of DSTs and decommissioning of the WTP until a later date when the mission for those facilities is nearing completion.

• *Disposal of Hanford's and DOE Offsite LLW and MLLW*—The decision to be made concerns the onsite location of disposal facilities for Hanford's waste and other DOE sites' LLW and MLLW. DOE committed in the HSW EIS ROD that henceforth LLW would be disposed of in lined trenches. Thus, the decision would concern whether to dispose of the waste in the 200-West Area or at the Integrated Disposal Facility in the 200-East Area.

• *Final Decontamination and Decommissioning of the FFTF*—The decision would identify the final end state for the above-ground, below-ground, and ancillary support structures.

VI. Potential Range of Alternatives

Six alternatives were originally proposed for TC EIS and are listed below. The initial scope of the TC EIS was provided in the January 2003 NOI and at each public scoping meeting.

• No Action Alternative, which was to implement the 1997 TWRS EIS ROD;

• Implement the 1997 TWRS EIS ROD with Modifications;

• Landfill Closure of Tank Farms/Onsite and Offsite Waste Disposal;

• Clean Closure of Tank Farms/Onsite and Offsite Waste Disposal;

• Accelerated Landfill Closure/Onsite and Offsite Waste Disposal; and

• Landfill Closure/Onsite and Offsite Waste Disposal.

Onsite disposal would include immobilized LAW, LLW, and MLLW resulting from tank retrieval and treatment. Offsite disposal of HLW would occur at Yucca Mountain. No determination has been made as to whether any of the tanks contain TRU waste. If it is determined that any tank waste is TRU waste, offsite disposal at WIPP would be appropriate, provided the required approvals from EPA and the New Mexico Environment Department were obtained.

As a result of the 2003 scoping for the TC EIS, a number of changes are being made to those identified in the NOI. The major changes are:

• The No Action Alternative was modified to address a traditional ''no action'' rather than the action from the TWRS EIS ROD;

• The alternative addressing implementation of the 1997 TWRS EIS ROD was modified to address both the currently planned vitrification capacity and the currently planned capacity supplemented with additional vitrification capacity as the supplemental treatment;

• A partial tank removal option was added, which analyzes leaving some of the SSTs in place and exhuming the SSTs completely in the SX and BX tank farms;

• The Landfill Closure of Tank Farms/Onsite and Offsite Waste Disposal Alternative has been modified to more clearly evaluate the No Separations (of HLW and LAW waste) with Onsite Storage and Offsite Disposal Alternative; and

• A suboption has been added to both the All Vitrification with Separations and All Vitrification/No Separations (of HLW and LAW waste) Alternatives to address closure of the cribs and trenches proximal to tanks within identified waste management areas in place as opposed to removing them.

For Hanford and offsite LLW and MLLW analyzed in the HSW EIS, DOE proposes to simplify the alternatives. Both waste types would be disposed of in lined trenches. DOE plans to update the volumes to be disposed of, approximating those volumes for offsite waste in the 2004 HSW EIS ROD, and to update the waste information. DOE also intends to update the transportation analysis of shipping offsite waste to Hanford for disposal. The onsite disposal alternatives are:

• Construction of a new disposal facility in the 200-West Area burial grounds; and

• Construction of new LLW and MLLW capacity in the Integrated Disposal Facility in the 200-East Area.

For the FFTF, the 2004 NOI identified three alternatives as listed below.

• No Action—actions consistent with previous DOE NEPA decisions would be completed; final decommissioning would not occur.

• Entombment—above-ground structures would be decontaminated and dismantled, below-ground structures would be grouted and left in place.

• Removal—above-ground structures would be decontaminated and dismantled, below-ground structures would be removed and disposed of at Hanford.

VII. Potential Environmental Issues for Analysis

The following issues have been tentatively identified for analysis in the TC & WM EIS. This list is presented to facilitate comment on the scope of the TC & WM EIS, but is not intended to be all-inclusive or to predetermine potential impacts of any alternative.

• Effects on the public and onsite workers of radiological and nonradiological material releases during normal operations and reasonably foreseeable accidents;

• Long-term risks to human populations resulting from waste disposal and residual tank system wastes;

• Effects on air and water quality of normal operations and reasonably foreseeable accidents, including long-term impacts on groundwater;

• Cumulative effects, including impacts of other past, present, and reasonably foreseeable actions at Hanford, including past discharges to cribs and trenches, groundwater remediation activities, activities subject to TPA requirements and cleanup activities under the Comprehensive Environmental Response, Compensation, and Liability Act;

• Effects on endangered species, archaeological/cultural/historical sites, floodplains and wetlands, and priority habitat;

• Effects of on- and offsite transportation and of reasonably

foreseeable transportation accidents; and

- Socioeconomic impacts on surrounding communities.

VIII. Public Scoping

DOE invites Federal agencies, American Indian tribal nations, state and local governments, and the general public to comment on the scope of the planned TC & WM EIS. Information on the scoping comment period is provided in the **DATES** section above. Comments previously submitted in response to the 2003 NOI for the TC EIS and the 2004 NOI for the FFTF EIS are being considered and need not be resubmitted.

Issued in Washington, DC, on January 30, 2006.

John Spitaleri Shaw,

Assistant Secretary for Environment, Safety and Health.

Appendix A—Related National Environmental Policy Act Documents

45 FR 46155, 1980, ''Double-Shell Tanks for Defense High-Level Radioactive Waste Storage, Hanford Site, Richland, Washington; Record of Decision,'' **Federal Register**.

53 FR 12449, 1988, ''Disposal of Hanford Defense High-Level, Transuranic, and Tank Wastes, Hanford Site, Richland, Washington; Record of Decision,'' **Federal Register**.

60 FR 28680, 1995, ''Programmatic Spent Nuclear Fuel Management and Idaho National Engineering Laboratory Environmental Restoration and Waste Management Program, Part III; Record of Decision,'' **Federal Register**.

60 FR 54221, 1995, ''Final Environmental Impact Statement for the Safe Interim Storage of Hanford Tank Wastes at the Hanford Site, Richland, Washington; Record of Decision,'' **Federal Register**.

60 FR 61687, 1995, ''Record of Decision; Safe Interim Storage of Hanford Tank Wastes, Hanford Site, Richland, Washington,'' **Federal Register**.

61 FR 3922, 1996, ''Availability of the Final Environmental Impact Statement for Management of Spent Nuclear Fuel from the K Basins at the Hanford Site, Richland, Washington; Notice of Availability of Final Environmental Impact Statement,'' **Federal Register**.

61 FR 10736, 1996, ''Management of Spent Nuclear Fuel from the K Basins at the Hanford Site, Richland, Washington; Record of Decision,'' **Federal Register**.

62 FR 8693, 1997, ''Record of Decision for the Tank Waste Remediation System, Hanford Site, Richland, Washington,'' **Federal Register**.

63 FR 3624, 1998, ''Record of Decision for the Department of Energy's Waste Isolation Pilot Plant Disposal Phase,'' **Federal Register**.

63 FR 3629, 1998, ''Record of Decision for the Department of Energy's Waste Management Program: Treatment and Storage of Transuranic Waste,'' **Federal Register**.

65 FR 10061, 2000, ''Record of Decision for the Department of Energy's Waste Management Program: Treatment and Disposal of Low-Level Waste and Mixed Low-Level Waste; Amendment to the Record of Decision for the Nevada Test Site,'' **Federal Register**.

69 FR 39449, 2004, ''Record of Decision for the Solid Waste Program, Hanford Site, Richland, Washington: Storage and Treatment of Low-Level Waste and Mixed Low-Level Waste; Disposal of Low-Level Waste and Mixed Low-Level Waste, and Storage, Processing, and Certification of Transuranic Waste for Shipment to the Waste Isolation Pilot Plant, **Federal Register**.

DOE/EA–0479, 1990, *Collecting Crust Samples from Level Detectors in Tank SY–101 at the Hanford Site,* U.S. Department of Energy, Richland, Washington.

DOE/EA–0495, 1991, *Preparation of Crust Sampling of Tank 241–SY–101,* U.S. Department of Energy, Richland, Washington.

DOE/EA–0511, 1991, *Characterization of Tank 241–SY–101,* U.S. Department of Energy, Richland, Washington.

DOE/EA–0581, 1991, *Upgrading of the Ventilation System at the 241–SY Tank Farm,* U.S. Department of Energy, Richland, Washington.

DOE/EA–0802, 1992, *Tank 241–SY–101 Equipment Installation and Operation to Enhance Tank Safety,* U.S. Department of Energy, Richland, Washington.

DOE/EA–0803, 1992, *Proposed Pump Mixing Operations to Mitigate Episodic Gas Releases in Tank 241–SY–101,* U.S. Department of Energy, Richland, Washington.

DOE/EA–0881, 1993, Tank 241–C–103 *Organic Vapor and Liquid Characterization and Supporting Activities,* U.S. Department of Energy, Richland, Washington.

DOE/EA–0933, 1995, *Tank 241–C–106 Past Practice Sluicing Waste Retrieval,* U.S. Department of Energy, Richland, Washington.

DOE/EA–0993, 1995, *Shutdown of the Fast Flux Test Facility, Hanford Site, Richland, Washington and Finding of No Significant Impact.*

DOE/EA–0981, 1995, *Environmental Assessment—Solid Waste Retrieval Complex, Enhanced Radioactive and Mixed Waste Storage Facility, Infrastructure Upgrades, and Central Waste Support Complex, Hanford Site, Richland, Washington,* U.S. Department of Energy, Richland Operations Office, Richland, Washington.

DOE/EA–1203, 1997, *Trench 33 Widening in 218–W–5 Low-Level Burial Ground,* U.S. Department of Energy, Richland, Washington.

DOE/EA–1276, 1999, *Widening Trench 36 of the 218–E–12B Low-Level Burial Ground,* U.S. Department of Energy, Richland, Washington.

DOE/EA–1405, 2002, *Transuranic Waste Retrieval from the 218–W–4B and 218–W–4C Low-Level Burial Grounds, Hanford Site, Richland, Washington,* Finding of No Significant Impact, U.S. Department of Energy, Richland, Washington.

DOE/EIS–0113, 1987, *Final Environmental Impact Statement—Disposal of Hanford Defense High-Level, Transuranic, and Tank Wastes, Hanford Site, Richland, Washington,* U.S. Department of Energy, Richland Operations Office, Richland, Washington.

DOE/EIS–0212, 1995, *Safe Interim Storage of Hanford Tank Wastes—Final Environmental Impact Statement,* U.S. Department of Energy, Richland Operations Office, Richland, Washington, and Washington State Department of Ecology, Olympia, Washington.

DOE/EIS–0189, 1996, *Tank Waste Remediation System, Hanford Site, Richland, Washington, Final Environmental Impact Statement,* U.S. Department of Energy, Richland Operations Office, Richland, Washington, and Washington State Department of Ecology, Olympia, Washington.

DOE/EIS–0189–SA1, 1997, *Supplement Analysis for the Proposed Upgrades to the Tank Farm Ventilation, Instrumentation, and Electrical Systems under Project W–314 in Support of Tank Farm Restoration and Safe Operations,* U.S. Department of Energy, Richland Operations Office, Richland, Washington.

DOE/EIS–0189–SA2, 1998, *Supplement Analysis for the Tank Waste Remediation System,* U.S. Department of Energy, Richland Operations Office, Richland, Washington.

DOE/EIS–0189–SA3, 2001, *Supplement Analysis for the Tank Waste Remediation System,* U.S. Department of Energy, Richland Operations Office, Richland, Washington.

DOE/EIS–0200, 1997, *Final Waste Management Programmatic Environmental Impact Statement for Managing Treatment, Storage, and Disposal of Radioactive and Hazardous Waste,* U.S. Department of Energy, Office of Environmental Management, Washington, DC.

DOE/EIS–0026–S–2, 1997, *Waste Isolation Pilot Plant Disposal Phase Final Supplemental Environmental Impact Statement II,* U.S. Department of Energy, Carlsbad, New Mexico.

DOE/EIS–0222, 1999, *Final Hanford Comprehensive Land-Use Plan Environmental Impact Statement,* U.S. Department of Energy, Richland Operations Office, Richland, Washington.

DOE/EIS–0310, 2000, *Final Programmatic Environmental Impact Statement for Accomplishing Expanded Civilian Nuclear Energy Research and Development and Isotope Production Missions in the United States, Including the Role of the Fast Flux Test Facility.*

DOE/EIS–0250, 2002, *Final Environmental Impact Statement for a Geologic Repository for the Disposal of Spent Nuclear Fuel and High-Level Radioactive Waste at Yucca Mountain, Nye County, Nevada,* U.S. Department of Energy, Office of Civilian Radioactive Waste Management, Yucca Mountain Site Characterization Office, North Las Vegas, Nevada.

DOE/EIS–0287, 2002, *Idaho High-Level Waste and Facilities Disposition Final Environmental Impact Statement,* U.S. Department of Energy, Idaho Operations Office, Idaho Falls, Idaho.

DOE/EIS–0286, 2004, *Final Hanford Site Solid (Radioactive and Hazardous) Waste Program Environmental Impact Statement, Richland, Washington,* U.S. Department of Energy, Richland Operations Office, Richland, Washington.

DOH Publication 320–031, 2004, *Final Environmental Impact Statement—Commercial Low-Level Radioactive Waste Disposal Site, Richland, Washington,* Washington State Department of Health, Olympia, Washington, and Washington State Department of Ecology, Olympia, Washington.

U.S. Department of Energy, 2006, *Report of the Review of the Hanford Solid Waste Environmental Impact Statement (EIS) Data Quality, Control and Management Issues,* Washington, DC.

[FR Doc. E6–1404 Filed 2–1–06; 8:45 am]

BILLING CODE 6450–01–P

DEPARTMENT OF ENERGY

Considerations for Transmission Congestion Study and Designation of National Interest Electric Transmission Corridors

AGENCY: Office of Electricity Delivery and Energy Reliability (''OE''), Department of Energy.

ACTION: Notice of inquiry requesting comment and providing notice of a technical conference.

SUMMARY: The Department of Energy (the ''Department'') seeks comment and information from the public concerning its plans for an electricity transmission congestion study and possible designation of National Interest Electric Transmission Corridors (''NIETCs'') in a report based on the study pursuant to section 1221(a) of the Energy Policy Act of 2005. Through this notice of inquiry, the Department invites comment on draft criteria for gauging the suitability of geographic areas as NIETCs and announces a public technical conference concerning the criteria for evaluation of candidate areas as NIETCs.

DATES: Written comments may be filed electronically in MS Word and PDF formats by e-mailing to: *EPACT1221@hq.doe.gov* no later than 5 p.m. EDT March 6, 2006. Also, comments can be filed by mail at the address listed below. The technical conference will be held in Chicago on March 29, 2006. For further information, please visit the Department's Web site at *http://www.electricity.doe.gov/1221.*

ADDRESSES: Written comments via mail should be submitted to:

Office of Electricity Delivery and Energy Reliability, OE–20, Attention: EPACT 1221 Comments, U.S. Department of Energy, Forestall Building, Room 6H–050, 1000 Independence Avenue, SW., Washington, DC 20585.

Note: U.S. Postal Service mail sent to the Department continues to be delayed by several weeks due to security screening. Electronic submission is therefore encouraged. Copies of written comments received and other relevant documents and information may be reviewed at *http://www.electricity.doe.gov/1221.*

FOR FURTHER INFORMATION CONTACT: Ms. Poonum Agrawal, Office of Electricity Delivery and Energy Reliability, OE–20, U.S. Department of Energy, 1000 Independence Avenue, SW., Washington, DC 20585, (202) 586–1411, *poonum.agrawal@hq.doe.gov,* or Lot Cooke, Office of the General Counsel, GC–76, 1000 Independence Avenue, SW., Washington, DC 20585, (202) 586–0503, *lot.cooke@hq.doe.gov.*

SUPPLEMENTARY INFORMATION:

I. Background

A. Overview

The Nation's electric system includes over 150,000 miles of interconnected high-voltage transmission lines that link generators to load centers.[1] The electric system has been built by electric utilities over a period of 100 years, primarily to serve local customers and support reliability; the system generally was not constructed with a primary emphasis on moving large amounts of power across multi-state regions.[2] Due to a doubling of electricity demand and generation over the past three decades and the advent of wholesale electricity markets, transfers of large amounts of electricity across the grid have increased significantly in recent years. The increase in regional electricity transfers saves electricity consumers billions of dollars,[3] but significantly increases transmission facility loading.

Investment in new transmission facilities has not kept pace with the increasing economic and operational importance of transmission service.[4] Today, congestion in the transmission system impedes economically efficient electricity transactions and in some cases threatens the system's safe and reliable operation.[5] The Department has estimated that this congestion costs consumers several billion dollars per year by forcing wholesale electricity purchasers to buy from higher-cost suppliers.[6] That estimate did not include the reliability costs associated with such bottlenecks.

The National Energy Policy (May 2001),[7] the Department's National Transmission Grid Study (May 2002),[8] and the Secretary of Energy's Electricity Advisory Board's Transmission Grid Solutions Report (September 2002),[9] recommended that the Department address regulatory obstacles in the planning and construction of electric transmission and distribution lines. In response to these recommendations, the Department held a ''Workshop on Designation of National Interest Electric Transmission Bottlenecks'' on July 14, 2004, in Salt Lake City, Utah. The Department also issued a **Federal Register** notice of inquiry on July 22, 2004.[10] The purpose of the workshop and the notice of inquiry was to learn stakeholders' views concerning transmission bottlenecks, identify how designation of such bottlenecks may benefit the users of the grid and electricity consumers, and recognize key bottlenecks. In its plans for implementation of subsection 1221(a), the Department notes that it has considered the comments received via the notice and the workshop.

B. Summary of Relevant Provisions From the Statute

On August 8, 2005, the President signed into law the Energy Policy Act of 2005, Public Law 109–58, (the ''Act''). Title XII of the Act, entitled ''The Electricity Modernization Act of 2005'' includes provisions relating to the siting of interstate electric transmission facilities and promoting advanced power system technologies. Subsection 1221(a) of the Act amends the Federal Power Act (''FPA'') by adding a new section 216 which requires the Secretary of Energy (the ''Secretary'') to conduct a nationwide study of electric transmission congestion (''congestion study''), and issue a report based on the study in which the Secretary may designate ''any geographic area experiencing electric energy transmission capacity constraints or congestion that adversely affects

[1] North American Electric Reliability Council, Electricity Supply and Demand Database (2003) available at *http://www.nerc.com/esd.*

[2] Edison Electric Institute, *Survey of Transmission Investment* at 1 (May 2005).

[3] Department of Energy, *National Transmission Grid Study,* at 19 (May 2002) available at *http://www.eh.doe.gov/ntgs/reports.html.*

[4] *Id.* at 7; *see also* Hirst, U.S. Transmission Capacity Present Status and Future Prospects, 7 (June 2004).

[5] *National Transmission Grid Study, supra note* 3, at 10–20.

[6] *Id.* at 16–18.

[7] *The National Energy Policy Development Group Report,* available at *http://www.energy.gov/engine/content.do?BT_CODE=ADAP.*

[8] *National Transmission Grid Study, supra* note 3.

[9] Department of Energy Electricity Advisory Board, *Transmission Grid Solutions,* available at *http://www.eab.energy.gov/index.cfm?fuseaction=home.publications.*

[10] Designation of National Interest Electric Transmission Bottlenecks, 69 FR 43833 (July 22, 2004) also available at *http://www.electricity.doe.gov/bottlenecks.*

consumers as a national interest electric transmission corridor.'' [11]

Subsection (a) of new FPA section 216 requires the Secretary to conduct a study of ''electric transmission congestion'' within ''[one] year after the date of enactment of [the Act] and every three years thereafter.'' [12] Subsections 216(a)(1) and (a)(3) of the FPA require the Secretary to conduct each congestion study in consultation with affected states and any appropriate regional entity.[13] FPA subsection 216(a)(2) requires the Secretary ''[a]fter considering alternatives and recommendations from interested parties,'' to issue a report, based on the study, in which the Secretary may designate ''any geographic area experiencing electric energy transmission capacity constraints or congestion that adversely affects consumers'' as an NIETC.[14] In exercising the Secretary's authority to designate NIETCs, subsection 216(a)(4) states that the Secretary may consider, among other things, whether—

(A) The economic vitality and development of the corridor, or the end markets served by the corridor, may be constrained by lack of adequate or reasonably priced electricity;

(B)(i) The economic growth in the corridor, or the end markets served by the corridor, may be jeopardized by reliance on limited sources of energy; and

(ii) A diversification of supply is warranted;

(C) The energy independence of the United States would be served by the designation;

(D) The designation would be in the interest of national energy policy; and

(E) The designation would enhance national defense and homeland security.[15]

If the Secretary designates an area ''experiencing electric energy transmission capacity constraints or congestion'' as an NIETC, subsection 216(b) of the FPA authorizes the Federal Energy Regulatory Commission (''FERC'') to issue permits for the ''construction and modification of electric transmission'' in the NIETC, provided that FERC finds that certain conditions have been met.[16]

C. Key Terms: Geographic Areas, Needs, and Corridors

In its initial electric transmission congestion study pursuant to FPA section 216, the Department expects to present an inventory of geographic areas of the Eastern and Western Interconnects that have important existing or projected needs related to the electricity transmission infrastructure. Such needs may include relieving existing or emerging congestion, addressing existing or emerging reliability problems, enabling larger transfers of economically beneficial electricity to load centers, or enabling delivery of electricity from new generation capacity to distant load centers. The Department recognizes that in some cases it may be possible to address such needs through functional alternatives such as distributed generation, conventional generation sited close to load, and/or enhanced demand response capacity.

The Department expects to identify corridors for potential projects as generalized electricity paths between two (or more) locations, as opposed to specific routes for transmission facilities. The Department believes that defining corridors too narrowly would unduly restrict state authorities, FERC, and other relevant parties in determining whether and how to authorize the construction and operation of transmission facilities to relieve the identified congestion. In their comments on the criteria set forth below, the Department invites commenters to address how broadly or narrowly the Department should consider and define corridors in its study and its NIETC designations.

III. Questions for Public Comment

A. Congestion Study

In conducting the initial electric transmission congestion study required by FPA subsection 216(a)(1), the Department intends to identify geographic areas where transmission congestion is significant, and where additions to transmission capacity (or suitable alternatives) could lessen potential adverse effects borne by consumers. The Department will compile an inventory of areas where planners believe significant transmission needs exist. This inventory, the work on which is already well underway, will be based on a review of existing transmission expansion plans and related studies by the regional coordination councils, other regional and subregional transmission planning groups, regional transmission operators, independent system operators and utilities. The inventory will also be informed by congestion modeling that the Department will conduct of the Eastern and Western Interconnects.

By August 8, 2006, the Department intends to publish its congestion study and to invite interested parties to provide comments and recommendations concerning these need assessments for each geographic area. Interested parties also will be invited to comment on or identify potential transmission corridors they think could be relevant to addressing such needs, and corridors suitable for designation as NIETCs. The Department will consider well-supported recommendations from affected States and interested parties throughout the study process regarding areas believed to merit urgent attention from the Department.

In that regard, if interested parties believe that there are geographic areas or transmission corridors for which there is a particularly acute need for early designation as NIETC, the Department invites interested parties to identify those areas in their comments on this NOI. If such areas are identified, the Department will consider whether it should complete its congestion study for that area in advance of the larger national study discussed elsewhere in this NOI, and proceed to receive comment and designate that area as an NIETC on an expedited basis. If interested parties wish to identify areas for early designation, they should supply with their comments all available data and information supporting a determination that severe needs exist. Parties should identify the area that they believe merits designation as an NIETC, and explain why early designation is necessary and appropriate. The Department will only consider for early designation as NIETCs those corridors for which a particularly compelling case is made that early designation is both necessary and appropriate, and for which data and information are submitted strongly supporting such a designation.

After publishing the national congestion study by August 8, 2006 and considering comments received on it, the Department may revise or update its study, or the Department may proceed directly to designation of some NIETCs, based on the study and the comments, alternatives and recommendations offered by the public.

To assist the Department in conducting and preparing its electric transmission congestion study so that the study will be the most useful in helping identify areas of need and areas

[11] The Electricity Modernization Act of 2005, sec. 1221, § 216, 119 Stat. 594, 946–953 (2005) (to be codified as amended at 16 U.S.C. 824p). *Note* that section 216 of the FPA specifically excludes the area covered by the Electricity Reliability Council of Texas. *Id.* at § 216(k). Section 216 of the FPA does not mention Alaska and Hawaii; however, their electricity supply systems are not interconnected with the grids of the continental U.S., and therefore the Department does not plan to include these two states in its initial congestion study.

[12] *Id.* § 216(a)(1).

[13] *Id.* § 216(a)(1), (3).

[14] *Id.* § 216(a)(2).

[15] *Id.* § 216(a)(4)(A)–(E).

[16] *Id.* § 216(b).

potentially suitable for designation as an NIETC, the Department requests comments on the following questions:

(1) Should the Department distinguish between persistent congestion and dynamic congestion, and if so, how?

(2) Should the Department distinguish between physical congestion and contractual congestion, and if so, how?

(3) Appendix A lists those transmission plans and studies the Department currently has under review. In addition to those listed in Appendix A, what existing, specific transmission studies and other plans should the Department review? How far back should the Department look when reviewing transmission planning and path flow literature?

(4) What categories of information would be most useful to include in the congestion study to develop geographic areas of interest?

B. Criteria Development

While it is conducting the congestion study, the Department intends to develop criteria based on the considerations listed in subsections 216(b)(4)(A)–(E) of the FPA,[17] and any other criteria the Department considers relevant, to evaluate geographic areas identified in the congestion study as candidates for NIETCs. The Department intends to apply these evaluation criteria to the geographic areas identified in the congestion study in order to identify areas where NIETC designations would be appropriate.

The Department invites comment on what criteria it should use in evaluating the suitability of geographic areas for NIETC status. Preliminary criteria that might be used in evaluating these considerations for NIETC evaluation are listed below, along with associated metrics that could be useful in applying them. Commenters are also invited to apply any of the draft criteria to one or more specific geographic areas and demonstrate how the criterion helps to identify such areas as having national significance for NIETC designation.

Draft Criterion 1: Action is needed to maintain high reliability. Maintaining high electric reliability is essential to any area's economic health and future development. Accordingly, an area would be of interest for possible NIETC designation if there is a clear need to remedy existing or emerging reliability problems. *Metrics:* A definition of the affected area in terms of load, population, and demand growth; a description of the expected degree of improvement in reliability associated with a proposed project; if appropriate, identification existing or projected violations of NERC Planning Criteria TPL–001, –002, –003, or –004.[18]

Draft Criterion 2: Action is needed to achieve economic benefits for consumers. An area may need substantial transmission improvements to enable large economic electricity transfers that would result in significant economic savings to retail electricity consumers. *Metrics:* Estimates, based on transparent calculations and data, of the aggregate economic savings per year to consumers over the relevant geographic areas and markets. A demonstration of expected reduction in end-market concentration and how economic benefits for consumers would be affected.

Draft Criterion 3: Actions are needed to ease electricity supply limitations in end markets served by a corridor, and diversify sources. Metrics: Areas that are dependent on ''reliability-must-run'' plants would benefit from targeted improvements, in terms of enhanced reliability, reduced costs, or both. Similarly, areas that are highly dependent on specific generation fuels could economically benefit from supply diversification. Estimate the likely magnitude of such benefits, showing calculations.

Draft Criterion 4: Targeted actions in the area would enhance the energy independence of the United States. Metrics: Provide calculations showing how specific actions aided by designation as an NIETC would increase fuel diversity, improve domestic fuel independence, or reduce dependence on energy imports. Quantify these impacts, including possible impacts on U.S. energy markets.

Draft Criterion 5: Targeted actions in the area would further national energy policy.

Draft Criterion 6: Targeted actions in the area are needed to enhance the reliability of electricity supplies to critical loads and facilities and reduce vulnerability of such critical loads or the electricity infrastructure to natural disasters or malicious acts. Metrics: For this criterion, relevant metrics would be case-specific.

Draft Criterion 7: The area's projected need (or needs) is not unduly contingent on uncertainties associated with analytic assumptions, e.g., assumptions about future prices for generation fuels, demand growth in load centers, the location of new generation facilities, or the cost of new generation technologies. Other things being equal, arguably the Department should be more inclined to designate NIETCs where there are existing needs instead of projected needs, particularly if those future needs rest upon relatively uncertain assumptions and contingencies. On the other hand, timely construction of transmission facilities often requires lead-times of five years or more, and all projections are based on assumptions and involve some degree of uncertainty. The challenge here is to determine what level of confidence can be reasonably imputed to specific projections. *Metrics:* What metrics would be suitable for gauging such uncertainties?

Draft Criterion 8: The alternative means of mitigating the need in question have been addressed sufficiently. Recognizing the value of transmission alternatives, the Department wishes to avoid designating NIETCs in ways that might unduly affect stakeholders' decisions about how to meet specific needs, confer advantage on transmission options as opposed to non-wires options or generation options, or favor some transmission options over others. At the same time, the Department is mindful that even taking these other factors into account transmission expansion is clearly needed in many areas, and that transmission expansion is itself a protracted process. The Department seeks comments on how it should balance these concerns.

The Department also seeks comment on two additional questions:

(1) Are there other criteria or considerations that the Department should consider in making an NIETC designation? If so, please explain, and show how your proposed criterion would be applied, if possible in the context of a specific area or areas that you consider suitable for NIETC designation. For each new criterion proposed, you should offer metrics that measure or quantify the criterion.

(2) Are certain considerations or criteria more important than others? If so, which ones, and why are they especially important?

[17] The five considerations are:

(A) The economic vitality and development of the corridor, or the end markets served by the corridor, may be constrained by lack of adequate or reasonably priced electricity;

(B)(i) The economic growth in the corridor, or the end markets served by the corridor, may be jeopardized by reliance on limited sources of energy; and (ii) a diversification of supply is warranted;

(C) The energy independence of the United States would be served by the designation;

(D) The designation would be in the interest of national energy policy; and

(E) The designation would enhance national defense and homeland security.

[18] North American Electric Reliability Council, planning criteria at *http://www.nerc.com/~filez/standards/Reliability_Standards.html#Transmission_Planning.*

IV. Public Meeting Announcement and Comments

The date of the public technical conference is listed in the **DATES** section at the beginning of this notice of inquiry. The chief purpose of this conference will be to allow participants to discuss key issues raised by commenters' responses concerning the criteria here proposed for the evaluation of geographic areas for designation as NIETCs. For more information about the conference and registration information, please go to *http://www.electricity.doe.gov/1221.*

To the extent possible, the Department wishes to make all submissions publicly available on one of its Web sites. However, if any person chooses to submit information that he or she considers to be privileged or confidential and exempt from public disclosure, that person should clearly identify the information that is considered to be privileged or confidential and explain why the submitter thinks the information should be exempt from disclosure, addressing as appropriate the criteria for nondisclosure in the Department's Freedom of Information Act regulations at 10 CFR 1004.11(f). The Department also requests that in such cases submitters provide one copy of their comments from which the information claimed to be exempt from disclosure has been redacted, and that protection of the information or data from disclosure be consistent with the requirements set forth in its Freedom of Information Act regulations at 10 CFR 1004.11.

Factors of interest to the Department when evaluating requests to treat submitted information as confidential include: (1) A description of the items; (2) whether and why such items are customarily treated as confidential within the industry; (3) whether the information is generally known by or available from other sources; (4) whether the information has previously been made available to others without obligation concerning confidentiality; (5) an explanation of the competitive injury to the submitting person which would result from public disclosure; (6) when such information might lose its confidential character due to the passage of time; and (7) why disclosure of the information would be contrary to the public interest.

Issued in Washington, DC on Friday, January 27, 2006.

Kevin Kolevar,

Director, Office of Electricity Delivery and Energy Reliability.

Appendix A

Appendix A lists those transmission plans and studies the Department currently has under review.

I. General Documents or Data

1. Electricity Advisory Board, Electric Resources Capitalization Subcommittee, U.S. Department of Energy, ''Competitive Wholesale Electricity Generation: A Report of the Benefits, Regulatory Uncertainty, and Remedies to Encourage Full Realization Across All Markets,'' September 2002.
2. Electric Transmission Constraint Study, FERC OMOI, December 2003.
3. Electricity Advisory Board, U.S. Department of Energy, ''Transmission Grid Solutions Report,'' September 2002.
4. Federal Energy Regulatory Commission, ''Testimony of Karl Pfirrmann, President, PJM Western Region, PJM Interconnection, L.L.C.,'' Promoting Regional Transmission Planning and Expansion to Facilitate Fuel Diversity Including Expanded Uses of Coal-Fired Resources—Docket No. AD05–3–000.
5. Federal Energy Regulatory Commission, ''Remarks of Audrey Zibelman, Executive Vice President, PJM Western Region, PJM Interconnection, L.L.C.,'' Transmission Independence and Investment—Docket No. AD05–5–000 and Pricing Policy for Efficient Operation and Expansion of the Transmission Grid—Docket No. PL03–1–000.
6. U.S. Department of Energy, ''National Transmission Grid Study,'' May 2002.
7. U.S. Department of Energy, ''Comments to the Designation of National Interest Electric Transmission Bottlenecks (NIETB) Notice of Inquiry,'' Appended 10/15/04.

II. Documents or Data From the Eastern Interconnection

1. NERC 2005 Long-Term Reliability Assessment.
2. NERC 2005 Summer Assessment.
3. NERC 2005/2006 Winter Assessment.
4. U.S. Department of Energy, ''National Transmission Grid Study,'' May 2002.
5. FERC Form–715s.
6. Florida-Southern Interface Study for 2005 Summer & 2005–06 Winter Bulk Electric Supply Conditions (Oct 2004).
7. ISO–NE Regional System Plan 2005 (October 2005).
8. Maryland Public Service Commission, ''Reply Comments of the Staff of the Maryland Public Service Commission in the Matter of the Inquiry Into Locational Marginal Prices in Central Maryland During the Summer of 2005''—Case No. 9047.
9. MEN 2002 Interregional Transmission System Reliability Assessment.
10. Michigan Public Service Commission, ''Final Staff Report of the Capacity Need Forum,'' January 3, 2006.
11. MISO 2003 Transmission Expansion Plan.
12. MISO Transmission Expansion Plan 2005 (June 2005).
13. NERC TLR Data.
14. NYISO 2004 Intermediate Area Transmission Review of the New York State.
15. NYISO Comprehensive Transmission Plan.
16. NYISO 2005 Load & Capacity Data.
17. NYISO Comprehensive Reliability Planning Process (CRPP) Reliability Needs Assessment (December 2005).
18. NYISO Comprehensive Reliability Planning Process Supporting Document and Appendices For The Draft Reliability Needs Assessment (December 2005).
19. NYISO Operating Study Winter 2004–05 (November 2004).
20. NYISO Transmission Performance Report (August 2005).
21. PJM Regional Transmission Expansion Plan 2005 (September 2005).
22. PJM, MISO, NYISO, and ISO–NE Real-time and Day-ahead Constraint Data
23. PJM Interconnection, L.L.C., ''Comments of PJM in Response to the MD PSC Notice of Inquiry''—Case Number 9047.
24. Project Mountaineer, Work Group Meeting, Sheraton Four Points Hotel Baltimore, MD, August 3, 2005.
25. SERC Reliability Review Subcommittee's 2005 Report to the SERC Engineering Committee (June 2005).
26. SPP RTO Expansion Plan 2005–2010 (September 2005).
27. VACAR 2004–2005 Winter Stability Study Report (Mar 2004).
28. VACAR 2005 Summer Reliability Study Report (Apr 2004).
29. VACAR 2007 Summer Reliability Study Report (Feb 2002).
30. VASTE 2005 Summer Reliability Study Report (May 2005).
31. VASTE 2005–06 Winter Study Report (Nov 2005).
32. VEM 2004 Summer Reliability Study Report (May 2004).
33. VEM 2004–2005 Winter Reliability Study Report (Nov 2004).
34. VST(E) 2011 Summer Study Report (Nov 2004).
35. VSTE 2008 Summer Study Report (Nov 2005).
36. NPCC 2004 Report of the CP–10 Working Group Under the Task Force on Coordinated Planning.

III. Documents or Data From the Western Interconnection

1. Available on the WECC Web site—*http://www.wecc.biz,* open ''Congestion Study'' under the Main Menu of the home page.
1.1. ''Framework for Expansion of the Western Interconnection Transmission System, October 2003''.
1.2. ''Western Interconnection Transmission Path Flow Study''—February 2003.
1.3. ''Northwestern Consortia to Study the Regional Wind Development Benefits of Upgrades to Nevada Transmission Systems''—May 10, 2005.
1.4. ''Conceptual Plan for Electricity Transmission in the West''—August 2001.
1.5. ''Proposed Criteria for Evaluation of Transmission and Alternative Resources''—October 2005.
2. Available on State of Wyoming Web site at *http://www.psc.state.wy.us/htdocs/*

subregional/reports.htm: ''Rocky Mountain Area Transmission Study''—September 2004.

3. Available on California Energy Commission Web site at *http://www.energy.ca.gov/2005publications /CEC–100–2005–006/CEC–100–2005–006–CTF.PDF:* ''Committee Final Strategic Transmission Investment Plan (Committee Final Strategic Plan), California Energy Commission, November 2005.''

4. Available on the Public Service Company of Colorado Web site at *http://www.rmao.com/wtpp.psco_studies.html:* ''Colorado Long Range Transmission Planning Study''—April 27, 2004.

5. Available from WECC (Phase 3 Accepted Path Rating Study Report)—Call (801) 582–0353: ''Southwest Power link and Palo Verde—Devers 500kV Series Capacitor Upgrade Project''—dated December 2, 2004.

6. Available from CAISO Web site.

6.1. CAISO testimony to the CPUC for the Palo Verde—Devers #2 Project *http://www.caiso.com/14cf/14cf82f921c90.pdf.*

6.2. Information on the Southwest Transmission Expansion Plan (STEP) *http://www.caiso.com/docs/2002/11/04/2002110417450022131.html.*

6.3. Documents on the Palo Verde—Devers #2 project *http://www.caiso.com/docs/2005/01/19/2005011914572217739.html.*

6.4. Information on the CAISO Transmission Economic Assessment Methodology (TEAM) *http://www.caiso.com/docs/2003/03/18/2003031815303519270.html.*

7. Available from Northwest Power Pool Web site (Northwest Regional Transmission Association reports).

7.1. ''Puget Sound Area Upgrade Study Report''—November 2004 *http://www.nwpp.org/ntac/pdf/PSASG%20Final%20Draft.pdf.*

7.2. ''Montana—Pacific Northwest Transmission Upgrade Study'' *http://www.nwpp.org/ntac/pdf/MT–NW%20Study%20Report%202005–Oct.zip.*

7.3. *http://www.nwpp.org/ntac/pdf/Selected%20Transmission%20Siting%20constraints.pdf.*

8. Available from the Southwest Area Transmission Sub-Regional Planning Group Web site.

8.1. ''Report of the Phase I Study of the Central Arizona Transmission System'' *http://www.azpower.org/cats/default.asp#phase1.*

8.2. ''Report of the Phase II Study of the Central Arizona Transmission System'' *http://www.azpower.org/cats/default.asp#phase2.*

8.3. ''Report of the Phase III Study of the Central Arizona Transmission System'' *http://www.azpower.org/cats/default.asp#phase3.*

[FR Doc. E6–1394 Filed 2–1–06; 8:45 am]

BILLING CODE 6450–01–P

ENVIRONMENTAL PROTECTION AGENCY

[FRL–8027–8]

Environmental Laboratory Advisory Board (ELAB) Meeting Dates and Agenda

AGENCY: Environmental Protection Agency.

ACTION: Notice of teleconference meetings.

SUMMARY: The Environmental Protection Agency's Environmental Laboratory Advisory Board (ELAB), as previously announced, will have teleconference meetings on January 18, 2006 at 1 p.m. E.T.; February 15, 2006 at 1 p.m. E.T.; March 15, 2006 at 1 p.m. E.T.; April 19, 2006 at 1 p.m. E.T.; and May 17, 2006 at 1 p.m. E.T. to discuss the ideas and views presented at the previous ELAB meetings, as well as new business. Items to be discussed by ELAB over these coming meetings include: (1) Expanding the number of laboratories seeking National Environmental Laboratory Accreditation Conference (NELAC) accreditation; (2) homeland security issues affecting the laboratory community; (3) ELAB support to the Agency's Forum on Environmental Measurements (FEM); (4) implementing the performance approach; (5) increasing state participation in NELAC; and (6) follow-up on some of ELAB's past recommendations and issues. In addition to these teleconferences, ELAB will be hosting their next face-to-face meeting on January 30, 2006 at the Westin Chicago River North in Chicago, Illinois from 9:30–12 C.T. and an open forum session on January 31, 2006 also at the Westin Chicago River North in Chicago, Illinois at 5:30 p.m. C.T.

Written comments on laboratory accreditation issues and/or environmental monitoring issues are encouraged and should be sent to Ms. Lara P. Autry, DFO, U.S. EPA (E243–05), 109 T. W. Alexander Drive, Research Triangle Park, NC 27709, faxed to (919) 541–4261, or e-mailed to *autry.lara@epa.gov.* Members of the public are invited to listen to the teleconference calls, and time permitting, will be allowed to comment on issues discussed during this and previous ELAB meetings. Those persons interested in attending should call Lara P. Autry at (919) 541–5544 to obtain teleconference information. The number of lines for the teleconferences, however, are limited and will be distributed on a first come, first serve basis. Preference will be given to a group wishing to attend over a request from an individual. For information on access or services for individuals with disabilities, please contact Lara P. Autry at the number above. To request accommodation of a disability, please contact Lara P. Autry, preferably at least 10 days prior to the meeting, to give EPA as much time as possible to process your request.

George M. Gray,

Assistant Administrator, Office of Research and Development.

[FR Doc. E6–1422 Filed 2–1–06; 8:45 am]

BILLING CODE 6560–50–P

ENVIRONMENTAL PROTECTION AGENCY

[FRL–8026–5]

Position Statement on Environmental Management Systems (EMSs)

AGENCY: Environmental Protection Agency (EPA).

ACTION: Notice of availability.

SUMMARY: This notice is to inform the public that EPA has updated its Position Statement on Environmental Management Systems (EMSs). This updated statement replaces the 2002 Position Statement on EMS signed by Administrator Whitman and reflects EPA's experiences to date with the promotion of voluntary EMSs as well as our continued commitment to be a leader in this area. The Position Statement explains EPA's policy on EMSs and the Agency's intent to continue to promote the voluntary wide-spread use of EMSs across a range of organizations and settings. EPA encourages organizations to implement EMSs that result in improved environmental performance and compliance, cost-savings, pollution prevention through source reduction, and continual improvement.

FOR FURTHER INFORMATION CONTACT: Shana Harbour 202–566–2959.

SUPPLEMENTARY INFORMATION:

Background

During the past decade, public and private organizations have increasingly adopted formal Environmental Management Systems (EMSs) to address their environmental responsibilities. The most common framework an EMS uses is the plan-do-check-act process, with the goal of continual improvement. EMSs provide organizations of all types with a structured system and approach for managing environmental and regulatory responsibilities to improve overall environmental performance and stewardship, including areas not subject to regulation such as product design,

resource conservation, energy efficiency, and other sustainable practices. EMSs can also facilitate the integration of the full scope of environmental considerations into the mission of the organization and improve environmental performance by establishing a continual process of checking to ensure environmental goals are set and met. A well-designed EMS includes procedures for taking corrective action if problems occur and encourages preventive action to avoid problems.

Over the last several years, EPA has been involved in a wide range of voluntary activities to facilitate EMS adoption (see *http://www.epa.gov/ems*). EPA has learned through our work with other organizations that EMSs can improve organizational efficiency and competitiveness, provide an infrastructure for public communication and engagement, and provide a platform to address other important issues such as security. EMSs do not replace the need for regulatory and enforcement programs, but they can complement them. Although EMSs cannot guarantee any specific level of environmental performance, EPA has learned that, when properly implemented, EMSs can help facilities achieve significantly improved environmental results and other benefits.

Using EMS as a Tool for Stewardship

EPA has developed EMSs at 34 of its own facilities in advance of the December 31, 2005 deadline set forth in Executive Order 13148—Greening the Government Through Leadership in Environmental Management. EPA will continue to utilize its EMSs to reduce its environmental footprint and to help lead the Agency's environmental stewardship efforts.

EPA will continue to encourage organizations to design and implement EMSs that improve compliance, prevent pollution, and integrate other means of improving environmental performance. EPA is also leading research designed to evaluate the effectiveness of EMSs in various settings and integrating EMSs into more of its own programs. We are evaluating which EMS elements and applications are most effective and how these management systems might be used to strengthen environmental programs and policies. This includes the ongoing efforts to assess the potential financial benefits of EMS adoption and to assess whether EMSs should play any role in the design of regulatory and permitting programs.

Statement of Principles

EPA's overall policy on EMSs, as with the EMS approach itself, will continue to be guided by the principles of continual improvement and learning, flexibility, and collaboration.

- EPA will encourage widespread use of EMSs across a range of organizations and settings, with particular emphasis on adoption of EMSs to achieve improved environmental performance and compliance, pollution prevention through source reduction, and continual improvement. The Agency will support EMSs that are appropriate to the needs and characteristics of specific sectors and facilities and encourage the use of EMSs as a means of integrating other facility management programs.
- EPA will promote the voluntary adoption of EMSs. To encourage voluntary adoption of EMSs, EPA will rely on public education and voluntary programs.
- EPA will encourage organizations that use EMSs to obtain stakeholder input on matters relevant to the development and implementation of an EMS and to demonstrate accountability for the performance outcomes of their EMSs through measurable objectives and targets. Additionally, the Agency will encourage organizations to share information on the performance of their EMSs with public and government agencies and facilitate this process where practicable.
- EPA will encourage the use of recognized environmental management frameworks, such as the ISO 14001 Standard, as a basis for designing and implementing EMSs that aim to achieve outcomes aligned with the nation's environmental policy goals and the principles of this Position Statement.
- EPA will collaborate with other key partners—including states, other Federal agencies, tribes, local governments, industry, and non-governmental organizations—as it implements this policy. EPA will support international EMS initiatives that facilitate the increased use of EMSs in the United States. The Agency will ensure that as it implements this policy, its decisions and work are transparent to all interested parties.
- EPA will lead by example, by developing, implementing, and maintaining EMSs at appropriate EPA facilities.
- EPA will foster continual learning by supporting research and public dialogue on EMSs that help improve the Agency's understanding of circumstances where EMSs can advance the nation's environmental policy goals. EPA will continue to collect improved data on the application of EMSs as it becomes available, including the efficacy of EMSs in improving environmental performance and the costs and benefits of an EMS to an organization and the environment.

Dated: December 13, 2005.

Stephen L. Johnson,

Administrator.

[FR Doc. E6–1423 Filed 2–1–06; 8:45 am]

BILLING CODE 6560–50–P

FEDERAL ELECTION COMMISSION

Sunshine Act Notice

AGENCY: Federal Election Commission.

DATE AND TIME: Tuesday, February 7, 2006 at 10 a.m.

PLACE: 999 E Street, NW., Washington, DC.

STATUS: This meeting will be closed to the public.

ITEMS TO BE DISCUSSED:

Compliance matters pursuant to 2 U.S.C. 437g.

Audits conducted pursuant to 2 U.S.C. 437g, 438(b), and Title 26, U.S.C.

Matters concerning participating in civil actions or proceedings or arbitration.

Internal personnel rules and procedures or matters affecting a particular employee.

PERSON TO CONTACT FOR INFORMATION: Mr. Robert Biersack, Press Officer, Telephone: (202) 694–1220.

Mary W. Dove,

Secretary of the Commission.

[FR Doc. 06–1006 Filed 1–31–06; 11:23 am]

BILLING CODE 6715–01–M

FEDERAL MARITIME COMMISSION

[Docket No. 06–02]

The Lake Charles Harbor and Terminal District v. West Cameron Port, Harbor and Terminal District; Notice of Filing of Complaint and Assignment

Notice is given that a complaint has been filed with the Federal Maritime Commission (''Commission'') by The Lake Charles Harbor and Terminal District (''Complainant''), against West Camden Port, Harbor, and Terminal District, (''Respondent''). Complainant asserts that it is a political subdivision of the State of Louisiana, a deep-water port authority which collects revenue from charges assessed against cargo and vessels using its facilities. Complainant alleges that Respondent is also a subdivision of the State of Louisiana and a port authority. Complainant

contends that Respondent has demanded wharfage charges from Cheniere LNG, Inc. (''Cheniere'') which do not bear a reasonable relationship to the services and facilities provided to those against whom the charges are assessed. Complainant further contends that these charges violate Section 10(d)(1) of the Shipping Act of 1984 (''The Act'') in that the Respondent failed to establish, observe, and enforce just and reasonable practices relating to the receiving, handing, storing, or delivering of property and is imposing undue or unreasonable prejudice or disadvantage with respect to Complainant. In addition, Complainant contends that Respondent violated Section 5(a) of the Act by not filing an agreement between Cheniere and Respondent with the FMC. Respondent prays for reparations in the amount of actual injury suffered by Complainant plus costs and reasonable attorney fees, an order directing Respondent to pay these reparations, an order directing Respondent to ''cease and desist'' from violating 10(d)(1) of the Act by collecting wharfage and other fees not related to any services provided, an order directing Respondent to file with the FMC all agreements, and any such other relief as the Commission deems just and proper.

This proceeding has been assigned to the Office of Administrative Law Judges. Hearing in this matter, if any is held, shall commence within the time limitations prescribed in 46 CFR 502.61, and only after consideration has been given by the parties and the presiding officer to the use of alternative forms of dispute resolution. The hearing shall include oral testimony and cross-examination in the discretion of the presiding officer only upon proper showing that there are genuine issues of material fact that cannot be resolved on the basis of sworn statements, affidavits, depositions, or other documents or that the nature of the matter in issue is such that an oral hearing and cross-examination are necessary for the development of an adequate record. Pursuant to the further terms of 46 CFR 502.61, the initial decision of the presiding officer in this proceeding shall be issued by January 29, 2007, and the final decision of the Commission shall be issued by May 29, 2007.

Bryant L. VanBrakle,

Secretary.

[FR Doc. E6–1369 Filed 2–1–06; 8:45 am]

BILLING CODE 6730–01–P

FEDERAL RESERVE SYSTEM

Formations of, Acquisitions by, and Mergers of Bank Holding Companies

The companies listed in this notice have applied to the Board for approval, pursuant to the Bank Holding Company Act of 1956 (12 U.S.C. 1841 *et seq.*) (BHC Act), Regulation Y (12 CFR part 225), and all other applicable statutes and regulations to become a bank holding company and/or to acquire the assets or the ownership of, control of, or the power to vote shares of a bank or bank holding company and all of the banks and nonbanking companies owned by the bank holding company, including the companies listed below.

The applications listed below, as well as other related filings required by the Board, are available for immediate inspection at the Federal Reserve Bank indicated. The application also will be available for inspection at the offices of the Board of Governors. Interested persons may express their views in writing on the standards enumerated in the BHC Act (12 U.S.C. 1842(c)). If the proposal also involves the acquisition of a nonbanking company, the review also includes whether the acquisition of the nonbanking company complies with the standards in section 4 of the BHC Act (12 U.S.C. 1843). Unless otherwise noted, nonbanking activities will be conducted throughout the United States. Additional information on all bank holding companies may be obtained from the National Information Center Web site at *http://www.ffiec.gov/nic/*.

Unless otherwise noted, comments regarding each of these applications must be received at the Reserve Bank indicated or the offices of the Board of Governors not later than February 27, 2006.

A. Federal Reserve Bank of Boston (Richard Walker, Community Affairs Officer) P.O. Box 55882, Boston, Massachusetts 02106-2204:

1. Wessagussett Mutual Holding Company, and Wessagussett Bancorp, Inc., both of Weymouth, Massachusetts; to become bank holding companies by acquiring 100 percent of the voting shares of Weymouth Bank, East Weymouth, Massachussetts.

Board of Governors of the Federal Reserve System, January 30, 2006.

Robert deV. Frierson,

Deputy Secretary of the Board.

[FR Doc. E6–1385 Filed 2–1–06; 8:45 am]

BILLING CODE 6210–01–S

FEDERAL RESERVE SYSTEM

Notice of Proposals to Engage in Permissible Nonbanking Activities or to Acquire Companies that are Engaged in Permissible Nonbanking Activities

The companies listed in this notice have given notice under section 4 of the Bank Holding Company Act (12 U.S.C. 1843) (BHC Act) and Regulation Y (12 CFR part 225) to engage *de novo*, or to acquire or control voting securities or assets of a company, including the companies listed below, that engages either directly or through a subsidiary or other company, in a nonbanking activity that is listed in § 225.28 of Regulation Y (12 CFR 225.28) or that the Board has determined by Order to be closely related to banking and permissible for bank holding companies. Unless otherwise noted, these activities will be conducted throughout the United States.

Each notice is available for inspection at the Federal Reserve Bank indicated. The notice also will be available for inspection at the offices of the Board of Governors. Interested persons may express their views in writing on the question whether the proposal complies with the standards of section 4 of the BHC Act. Additional information on all bank holding companies may be obtained from the National Information Center Web site at *http://www.ffiec.gov/nic/*.

Unless otherwise noted, comments regarding the applications must be received at the Reserve Bank indicated or the offices of the Board of Governors not later than February 17, 2006.

A. Federal Reserve Bank of San Francisco (Tracy Basinger, Director, Regional and Community Bank Group) 101 Market Street, San Francisco, California 94105-1579:

1. Cathay General Bancorp, Los Angeles, California; to acquire voting shares of Broadway Financial Corporation, Los Angeles, California, and thereby indirectly acquire voting shares of Broadway Financial Funding LLC, Los Angeles, California, and thereby engage in extending credit and servicing loans, pursuant to section 225.28(b)(1) of Regulation Y.

Board of Governors of the Federal Reserve System, January 30, 2006.

Robert deV. Frierson,

Deputy Secretary of the Board.

[FR Doc. E6–1384 Filed 2–1–06; 8:45 am]

BILLING CODE 6210–01–S

DEPARTMENT OF HEALTH AND HUMAN SERVICES

Food and Drug Administration

Summaries of Medical and Clinical Pharmacology Reviews of Pediatric Studies; Availability

AGENCY: Food and Drug Administration, HHS.

ACTION: Notice.

SUMMARY: The Food and Drug Administration (FDA) is announcing the availability of summaries of medical and clinical pharmacology reviews of pediatric studies submitted in supplements for INVANZ (ertapenem), KEPPRA (levetiracetam), TRILEPTAL (Oxcarbazepine), and ZYVOX (linezolid). These summaries are being made available consistent with the Best Pharmaceuticals for Children Act (BPCA). For all pediatric supplements submitted under the BPCA, the BPCA requires FDA to make available to the public a summary of the medical and clinical pharmacology reviews of the pediatric studies conducted for the supplement.

ADDRESSES: Submit written requests for single copies of the summaries to the Division of Drug Information (HFD–240), Center for Drug Evaluation and Research, Food and Drug Administration, 5600 Fishers Lane, Rockville, MD 20857. Please specify by product name which summary or summaries you are requesting. Send one self-addressed adhesive label to assist that office in processing your requests. See the **SUPPLEMENTARY INFORMATION** section for electronic access to the summaries.

FOR FURTHER INFORMATION CONTACT: Grace Carmouze, Center for Drug Evaluation and Research, Food and Drug Administration, 10903 New Hampshire Ave., Bldg. 21, rm. 1613, Silver Spring, MD 20993-0002, 301–796–2200, *carmouzeg@cder.fda.gov*.

SUPPLEMENTARY INFORMATION:

I. Background

FDA is announcing the availability of summaries of medical and clinical pharmacology reviews of pediatric studies conducted for INVANZ (ertapenem), KEPPRA (levetiracetam), TRILEPTAL (Oxcarbazepine), and ZYVOX (linezolid). The summaries are being made available consistent with section 9 of the BPCA (Public Law 107–109). Enacted on January 4, 2002, the BPCA reauthorizes, with certain important changes, the pediatric exclusivity program described in section 505A of the Federal Food, Drug, and Cosmetic Act (21 U.S.C. 355a). Section 505A permits certain applications to obtain 6 months of marketing exclusivity if, in accordance with the requirements of the statute, the sponsor submits requested information relating to the use of the drug in the pediatric population.

One of the provisions the BPCA added to the pediatric exclusivity program pertains to the dissemination of pediatric information. Specifically, for all pediatric supplements submitted under the BPCA, the BPCA requires FDA to make available to the public a summary of the medical and clinical pharmacology reviews of pediatric studies conducted for the supplement (21 U.S.C. 355a(m)(1)). The summaries are to be made available not later than 180 days after the report on the pediatric study is submitted to FDA (21 U.S.C. 355a(m)(1)). Consistent with this provision of the BPCA, FDA has posted on the Internet at *http://www.fda.gov/cder/pediatric/index.htm* summaries of medical and clinical pharmacology reviews of pediatric studies submitted in supplements for INVANZ (ertapenem), KEPPRA (levetiracetam), TRILEPTAL (Oxcarbazepine), and ZYVOX (linezolid). Copies are also available by mail (see **ADDRESSES**).

II. Electronic Access

Persons with access to the Internet may obtain the document at *http://www.fda.gov/cder/pediatric/index.htm*.

Dated: January 24, 2006.

Jeffrey Shuren,

Assistant Commissioner for Policy.

[FR Doc. E6–1366 Filed 2–1–06; 8:45 am]

BILLING CODE 4160–01–S

DEPARTMENT OF HEALTH AND HUMAN SERVICES

Food and Drug Administration

[Docket No. 2005P–0096]

Determination That CLARITIN (Loratadine) Hives Relief Syrup, 5 Milligrams per 5 Milliliters, Was Not Withdrawn From Sale for Reasons of Safety or Effectiveness

AGENCY: Food and Drug Administration, HHS.

ACTION: Notice.

SUMMARY: The Food and Drug Administration (FDA) has determined that CLARITIN (loratadine) Hives Relief syrup, 5 milligrams (mg) per (/) 5 milliliters (mL), was not withdrawn from sale for reasons of safety or effectiveness. This determination will allow FDA to approve abbreviated new drug applications (ANDAs) for loratadine hives relief syrup, 5 mg/5mL.

FOR FURTHER INFORMATION CONTACT: Tawni B. Schwemer, Center for Drug Evaluation and Research (HFD–7), Food and Drug Administration, 5600 Fishers Lane, Rockville, MD 20857, 301–594–2041.

SUPPLEMENTARY INFORMATION: In 1984, Congress enacted the Drug Price Competition and Patent Term Restoration Act of 1984 (Pub. L. 98–417) (the 1984 amendments), which authorized the approval of duplicate versions of drug products approved under an ANDA procedure. ANDA sponsors must, with certain exceptions, show that the drug for which they are seeking approval contains the same active ingredient in the same strength and dosage form as the ''listed drug,'' which is typically a version of the drug that was previously approved. Sponsors of ANDAs do not have to repeat the extensive clinical testing otherwise necessary to gain approval of a new drug application (NDA). The only clinical data required in an ANDA are data to show that the drug that is the subject of the ANDA is bioequivalent to the listed drug.

The 1984 amendments include what is now section 505(j)(7) of the Federal Food, Drug, and Cosmetic Act (21 U.S.C. 355(j)(7)), which requires FDA to publish a list of all approved drugs. FDA publishes this list as part of the ''Approved Drug Products With Therapeutic Equivalence Evaluations,'' which is generally known as the ''Orange Book.'' Under FDA regulations, drugs are withdrawn from the list if the agency withdraws or suspends approval of the drug's NDA or ANDA for reasons of safety or effectiveness or if FDA determines that the listed drug was withdrawn from sale for reasons of safety or effectiveness (§ 314.162 (21 CFR 314.162)).

Under § 314.161(a)(1) (21 CFR 314.161(a)(1)), the agency must determine whether a listed drug was withdrawn from sale for reasons of safety or effectiveness before an ANDA that refers to that listed drug may be approved. FDA may not approve an ANDA that does not refer to a listed drug.

CLARITIN (loratadine) Hives Relief syrup, 5 mg/5 mL, is the subject of approved NDA 20–641 held by Schering Corp. (now Schering-Plough Healthcare Products) (Schering). In January 2002, Schering submitted a supplemental NDA for the over-the-counter (OTC) use of CLARITIN (loratadine) syrup for the relief of itching due to hives (urticaria), to be marketed under the trade name

CLARITIN Hives Relief. FDA approved this trade name and indication for OTC use under NDA 20–641 on November 19, 2003. Schering has not marketed the 5-mg/5-mL strength of Claritin Hives Relief syrup.

In a citizen petition dated February 23, 2005 (Docket No. 2005P–0096), submitted under 21 CFR 10.30, Silarx Pharmaceuticals, Inc. (Silarx), requested that the agency determine, as described in § 314.161, whether CLARITIN (loratadine) Hives Relief syrup, 5 mg/5 mL, was withdrawn from sale for reasons of safety or effectiveness. The agency has determined that Schering's CLARITIN (loratadine) Hives Relief syrup, 5 mg/5 mL, approved under NDA 20–641, was not withdrawn from sale for reasons of safety or effectiveness. To date, Schering has not marketed the 5-mg/5-mL strength of its CLARITIN (loratadine) Hives Relief syrup. In previous instances (see e.g., the **Federal Register** of December 30, 2002 (67 FR 79640 at 79641) (addressing a relisting request for Diazepam Autoinjector)), the agency has determined that, for purposes of §§ 314.161 and 314.162, never marketing an approved drug product is equivalent to withdrawing the drug from sale.

FDA has reviewed its files for records concerning the withdrawal of CLARITIN (loratadine) Hives Relief syrup, 5 mg/5 mL. There is no indication that the decision not to market CLARITIN (loratadine) Hives Relief syrup, 5 mg/5 mL, commercially is a function of safety or effectiveness concerns, and no data or information has been submitted to the docket concerning the reason for which CLARITIN (loratadine) Hives Relief syrup, 5 mg/5 mL was withdrawn from sale. The identical formulation and strength is currently marketed OTC as Claritin syrup for the temporary relief of symptoms due to hay fever or other respiratory allergies: runny nose, sneezing, itching, watery eyes, and itching of the nose or throat. FDA is not aware of information that would indicate that Claritin Hives Relief syrup was withdrawn from sale for reasons of safety or effectiveness.

For the reasons outlined in this document, FDA has determined that Schering's CLARITIN (loratadine) Hives Relief syrup, 5 mg/5 mL, was not withdrawn from sale for reasons of safety or effectiveness. Accordingly, the agency will continue to list CLARITIN (loratadine) Hives Relief syrup, 5 mg/5 mL, in the ''Discontinued Drug Product List'' section of the Orange Book. The ''Discontinued Drug Product List'' delineates, among other items, drug products that have been discontinued from marketing for reasons other than safety and effectiveness. ANDAs that refer to CLARITIN (loratadine) Hives Relief syrup, 5 mg/5 mL, may be approved by the agency.

Dated: January 24, 2006.

Jeffrey Shuren,

Assistant Commissioner for Policy.

[FR Doc. E6–1364 Filed 2–1–06; 8:45 am]

BILLING CODE 4160–01–S

DEPARTMENT OF HEALTH AND HUMAN SERVICES

Food and Drug Administration

[Docket No. 2004E–0394]

Determination of Regulatory Review Period for Purposes of Patent Extension; ALOXI

AGENCY: Food and Drug Administration, HHS.

ACTION: Notice.

SUMMARY: The Food and Drug Administration (FDA) has determined the regulatory review period for ALOXI and is publishing this notice of that determination as required by law. FDA has made the determination because of the submission of an application to the Director of Patents and Trademarks, Department of Commerce, for the extension of a patent that claims that human drug product.

ADDRESSES: Submit written comments and petitions to the Division of Dockets Management (HFA–305), Food and Drug Administration, 5630 Fishers Lane, rm. 1061, Rockville, MD 20852. Submit electronic comments to *http://www.fda.gov/dockets/ecomments*.

FOR FURTHER INFORMATION CONTACT: Claudia V. Grillo, Office of Regulatory Policy (HFD–013), Food and Drug Administration, 5600 Fishers Lane, Rockville, MD 20857, 240–453–6681.

SUPPLEMENTARY INFORMATION: The Drug Price Competition and Patent Term Restoration Act of 1984 (Public Law 98–417) and the Generic Animal Drug and Patent Term Restoration Act (Public Law 100–670) generally provide that a patent may be extended for a period of up to 5 years so long as the patented item (human drug product, animal drug product, medical device, food additive, or color additive) was subject to regulatory review by FDA before the item was marketed. Under these acts, a product's regulatory review period forms the basis for determining the amount of extension an applicant may receive.

A regulatory review period consists of two periods of time: a testing phase and an approval phase. For human drug products, the testing phase begins when the exemption to permit the clinical investigations of the drug becomes effective and runs until the approval phase begins. The approval phase starts with the initial submission of an application to market the human drug product and continues until FDA grants permission to market the drug product. Although only a portion of a regulatory review period may count toward the actual amount of extension that the Director of Patents and Trademarks may award (for example, half the testing phase must be subtracted, as well as any time that may have occurred before the patent was issued), FDA's determination of the length of a regulatory review period for a human drug product will include all of the testing phase and approval phase as specified in 35 U.S.C. 156(g)(1)(B).

FDA recently approved for marketing the human drug product ALOXI (palonosetron hydrochloride). ALOXI is indicated for the following: (1) The prevention of acute nausea and vomiting associated with initial or repeat courses of moderately and highly emetogenic cancer chemotherapy, and (2) the prevention of delayed nausea and vomiting associated with initial or repeat courses of moderately and highly emetogenic cancer chemotherapy. Subsequent to this approval, the Patent and Trademark Office received a patent term restoration application for ALOXI (U.S. Patent No. 5,202,333) from Roche Palo Alto, LLC, and the Patent and Trademark Office requested FDA's assistance in determining this patent's eligibility for patent term restoration. In a letter dated October 19, 2004, FDA advised the Patent and Trademark Office that this human drug product had undergone a regulatory review period and that the approval of ALOXI represented the first permitted commercial marketing or use of the product. Thereafter, the Patent and Trademark Office requested that FDA determine the product's regulatory review period.

FDA has determined that the applicable regulatory review period for ALOXI is 3,867 days. Of this time, 3,565 days occurred during the testing phase of the regulatory review period, while 302 days occurred during the approval phase. These periods of time were derived from the following dates:

1. *The date an exemption under section 505 of the Federal Food, Drug, and Cosmetic Act (the act) (21 U.S.C. 355) became effective*: December 24, 1992. The applicant claims December 22, 1992, as the date the investigational new drug application (IND) became effective. However, FDA records

indicate that the IND effective date was December 24, 1992, which was 30 days after FDA receipt of the IND.

2. *The date the application was initially submitted with respect to the human drug product under section 505 of the act*: September 27, 2002. FDA has verified the applicant's claim that the new drug application (NDA) for ALOXI (NDA 21–372) was initially submitted on September 27, 2002.

3. *The date the application was approved*: July 25, 2003. FDA has verified the applicant's claim that NDA 21–372 was approved on July 25, 2003.

This determination of the regulatory review period establishes the maximum potential length of a patent extension. However, the U.S. Patent and Trademark Office applies several statutory limitations in its calculations of the actual period for patent extension. In its application for patent extension, this applicant seeks 1,827 days of patent term extension.

Anyone with knowledge that any of the dates as published are incorrect may submit to the Division of Dockets Management (see **ADDRESSES**) written or electronic comments and ask for a redetermination by April 3, 2006. Furthermore, any interested person may petition FDA for a determination regarding whether the applicant for extension acted with due diligence during the regulatory review period by August 1, 2006. To meet its burden, the petition must contain sufficient facts to merit an FDA investigation. (See H. Rept. 857, part 1, 98th Cong., 2d sess., pp. 41–42, 1984.) Petitions should be in the format specified in 21 CFR 10.30.

Comments and petitions should be submitted to the Division of Dockets Management. Three copies of any mailed information are to be submitted, except that individuals may submit one copy. Comments are to be identified with the docket number found in brackets in the heading of this document. Comments and petitions may be seen in the Division of Dockets Management between 9 a.m. and 4 p.m., Monday through Friday.

Dated: January 5, 2006.

Jane A. Axelrad,

Associate Director for Policy, Center for Drug Evaluation and Research.

[FR Doc. 06–903 Filed 2–1–06; 8:45 am]

BILLING CODE 4160–01–S

DEPARTMENT OF HEALTH AND HUMAN SERVICES

Food and Drug Administration

[Docket Nos. 2005E–0258, 2005E–0247, and 2005E–0233]

Determination of Regulatory Review Period for Purposes of Patent Extension; OMACOR

AGENCY: Food and Drug Administration, HHS.

ACTION: Notice.

SUMMARY: The Food and Drug Administration (FDA) has determined the regulatory review period for OMACOR and is publishing this notice of that determination as required by law. FDA has made the determination because of the submission of three applications to the Director of Patents and Trademarks, Department of Commerce, for the extension of three patents that claim that human drug product.

ADDRESSES: Submit written comments and petitions to the Division of Dockets Management (HFA–305), Food and Drug Administration, 5630 Fishers Lane, rm. 1061, Rockville, MD 20852. Submit electronic comments to *http://www.fda.gov/dockets/ecomments*.

FOR FURTHER INFORMATION CONTACT: Claudia V. Grillo, Office of Regulatory Policy (HFD–013), Food and Drug Administration, 5600 Fishers Lane, Rockville, MD 20857, 240–453–6681.

SUPPLEMENTARY INFORMATION: The Drug Price Competition and Patent Term Restoration Act of 1984 (Public Law 98–417) and the Generic Animal Drug and Patent Term Restoration Act (Public Law 100–670) generally provide that a patent may be extended for a period of up to 5 years so long as the patented item (human drug product, animal drug product, medical device, food additive, or color additive) was subject to regulatory review by FDA before the item was marketed. Under these acts, a product's regulatory review period forms the basis for determining the amount of extension an applicant may receive.

A regulatory review period consists of two periods of time: A testing phase and an approval phase. For human drug products, the testing phase begins when the exemption to permit the clinical investigations of the drug becomes effective and runs until the approval phase begins. The approval phase starts with the initial submission of an application to market the human drug product and continues until FDA grants permission to market the drug product. Although only a portion of a regulatory review period may count toward the actual amount of extension that the Director of Patents and Trademarks may award (for example, half the testing phase must be subtracted, as well as any time that may have occurred before the patent was issued), FDA's determination of the length of a regulatory review period for a human drug product will include all of the testing phase and approval phase as specified in 35 U.S.C. 156(g)(1)(B).

FDA recently approved for marketing the human drug product OMACOR (omega–3–acid ethyl esters). OMACOR is indicated as an adjunct to diet to reduce very high (= 500 milligrams per deciliter) triglyceride levels in adult patients. Subsequent to this approval, the Patent and Trademark Office received three patent term restoration applications for OMACOR (U.S. Patent Nos. 5,656,667, 5,698,594, and 5,502,077) from Pronova Biocare AS, and the Patent and Trademark Office requested FDA's assistance in determining these patents' eligibility for patent term restoration. In a letter dated July 8, 2005, FDA advised the Patent and Trademark Office that this human drug product had undergone a regulatory review period and that the approval of OMACOR represented the first permitted commercial marketing or use of the product. Thereafter, the Patent and Trademark Office requested that FDA determine the product's regulatory review period.

FDA has determined that the applicable regulatory review period for OMACOR is 3,712 days. Of this time, 3,408 days occurred during the testing phase of the regulatory review period, while 304 days occurred during the approval phase. These periods of time were derived from the following dates:

1. *The date an exemption under section 505(i) of the Federal Food, Drug, and Cosmetic Act (the act) (21 U.S.C. 355(i)) became effective*: September 14, 1994. The applicant claims August 15, 1994, as the date the investigational new drug application (IND) became effective. However, FDA records indicate that the IND effective date was September 14, 1994, which was 30 days after FDA receipt of the IND.

2. *The date the application was initially submitted with respect to the human drug product under section 505 of the act*: January 12, 2004. FDA has verified the applicant's claim that the new drug application (NDA) for OMACOR (NDA 21–654) was initially submitted on January 12, 2004.

3. *The date the application was approved*: November 10, 2004. FDA has verified the applicant's claim that NDA

21–654 was approved on November 10, 2004.

This determination of the regulatory review period establishes the maximum potential length of a patent extension. However, the U.S. Patent and Trademark Office applies several statutory limitations in its calculations of the actual period for patent extension. In its applications for patent extension, this applicant seeks 1,477 (U.S. Patent No. 5,656,667), 1,413 (U.S. Patent No. 5,698,594), and 1,728 (U.S. Patent No. 5,502,077) days of patent term extension.

Anyone with knowledge that any of the dates as published is incorrect may submit to the Division of Dockets Management (see **ADDRESSES**) written or electronic comments and ask for a redetermination by April 3, 2006. Furthermore, any interested person may petition FDA for a determination regarding whether the applicant for extension acted with due diligence during the regulatory review period by August 1, 2006. To meet its burden, the petition must contain sufficient facts to merit an FDA investigation. (See H. Rept. 857, part 1, 98th Cong., 2d sess., pp. 41–42, 1984.) Petitions should be in the format specified in 21 CFR 10.30.

Comments and petitions should be submitted to the Division of Dockets Management. Three copies of any mailed information are to be submitted, except that individuals may submit one copy. Comments are to be identified with the docket number found in brackets in the heading of this document. Comments and petitions may be seen in the Division of Dockets Management between 9 a.m. and 4 p.m., Monday through Friday.

Dated: January 5, 2006.

Jane A. Axelrad,

Associate Director for Policy, Center for Drug Evaluation and Research.

[FR Doc. E6–1365 Filed 2–1–06; 8:45 am]

BILLING CODE 4160–01–S

DEPARTMENT OF HEALTH AND HUMAN SERVICES

National Institutes of Health

National Emerging Infectious Diseases Laboratories Record of Decision

ACTION: Notice.

SUMMARY: The Department of Health and Human Services, the National Institutes of Health (NIH), has decided, after completion of a Final Environmental Impact Statement (FEIS) and a thorough consideration of the public comments on the Draft EIS and Supplemental EIS, to implement the Proposed Action, which is identified as the Preferred Alternative in the Final EIS. This action is to partially fund the construction of a state-of-the-art National Biocontainment Laboratory (NBL), to be called the National Emerging Infectious Diseases Laboratories (NEIDL), at the Boston University Medical Center (BUMC) Campus in Boston, Massachusetts.

FOR FURTHER INFORMATION CONTACT: Valerie Nottingham, Chief of the Environmental Quality Branch, Division of Environmental Protection, Office of Research Facilities Development and Operations, NIH, Building 13, Room 2W64, 9000 Rockville Pike, Bethesda, MD 20892, Fax 301–480–8056, e-mail *nihnepa@mail.nih.gov.*

SUPPLEMENTARY INFORMATION:

Decision

After careful review of the environmental consequences in the Final Environmental Impact Statement for the National Emerging Infectious Diseases Laboratories (Final NEIDL EIS), and consideration of public comment throughout the NEPA process, the NIH has decided to implement the Proposed Action described below as the Selected Alternative.

Selected Alternative

The NIH plans to partially fund the construction of a state-of the art National Biocontainment Laboratory, which will be known as the National Emerging Infectious Diseases Laboratories (NEIDL), on the Boston University Medical Center Campus in Boston, Massachusetts. The NIH will fund approximately $128 million dollars. The proposed NEIDL will enhance national security through the development and evaluation of improved diagnostics, therapeutics, and vaccines for the protection against naturally emerging and re-emerging diseases, including those that have the potential for bioterrorism. The proposed NEIDL will not conduct research to develop biological weapons.

The proposed NEIDL facility will be a new steel and reinforced concrete seven-story building that will be constructed within the BioSquare Research Park, with a total assignable area of 84,100 square feet, and will house Biosafety Level (BSL)–4, BSL–3, and BSL–2 facilities, BSL–4 and BSL–3 animal facilities, an Arthropod Containment Level (ACL)–3 insectary, offices, conference rooms, and support facilities including an effluent treatment room, secure loading dock, and dedicated mechanical floors to enhance containment features of the building.

The proposed NEIDL facility will be designed to safely support all the superimposed loads applied to the building and will be constructed to the requirements of Seismic Performance Category C, which assures that the building structure stays functional after a seismic event. In addition to standby generators to provide power in the event of a power outage, the NEIDL facility will have a distributed on-line uninterruptible power supply to power the BSL–4 laboratory biosafety cabinets, critical building control panels and alarms. The four biosafety levels have increasingly stringent design, security, and containment requirements. The safety levels are determined based on the biological materials used in research and the ways they affect the human population. BSL–1 facilities have no requirements for safety equipment, while BSL–4 facilities have extensive and multiple requirements for safety equipment and facility design such as isolation, buffer zones, airflow and pressure requirements, and high efficiency particulate air (HEPA) filtration.

The building also will be provided with an environmental monitoring system to assess room pressure differentials (to ensure negative pressure in the biocontainment areas), smoke detection, and the pressure drop condition HEPA filters. Visual indicators (such as pressure gauges) and audible or strobic alarms will alert NEIDL personnel in the event of an emergency or situation that requires corrective action or other response. The NEIDL will have fire protection systems that meet or exceed requirements specified by the National Fire Protection Association and all applicable local, state, Federal, and BUMC requirements.

The design of the proposed NEIDL facility's BSL–4, –3, and –2 laboratories will comply with the recommendations and requirements of the Centers for Disease Control (CDC) and the NIH joint publication addressing biosafety in laboratories, the current edition Biosafety in Microbiological and Biomedical Laboratories, as well as NIH's Design Policies and Guidelines for Biomedical Research Laboratories. The BSL–4, –3, –2 animal laboratories will further comply with the recommendations and requirements of the latest edition of Guide for Care and Use of Laboratory Animals, published by the National Research Council.

The BSL–4 laboratory environment employs the concept of a ''box-within-a-box'' principle, whereby the laboratory is built within a pressure-

controlled buffer. The BSL–4 laboratories will be physically and functionally independent from other laboratory functions. All penetrations in the walls, ceilings, and floor will be sealed. The control system for maintaining the required pressure differentials will be capable of being monitored inside and outside of the laboratory. The BSL–4 laboratories will utilize a series of airlocks for entry and exit, will have dedicated supply and exhaust ventilation, and workers in the BSL–4 laboratories will use positive pressure ventilation suits.

Workers will be required to take a chemical shower to decontaminate the surface of their suits before they can leave the area. Prior to emission through stacks on the building roof, exhaust air from the negatively pressurized BSL–4 laboratories will pass through dual HEPA filters mounted in series in a dedicated sealed exhaust system. The exhaust will also pass through isolation dampers that will close within seconds upon receipt of a containment isolation signal. In addition, each laboratory will be equipped with multiple Class II Biosafety Cabinets with their own HEPA exhaust system. Liquid waste will be sterilized in a biowaste cooker system before discharge. Solid waste will be sterilized in autoclaves prior to leaving containment areas.

The NEIDL BSL–3 laboratories, BSL–3 animal laboratories, and ACL–3 insectary will be separated by restricted traffic flow within the building and access to the laboratory will be restricted by the use of electronic recognition devices. A ventilated airlock will separate the common corridors from the containment facility. The airlock doors will be interlocked to prevent simultaneous opening of doors between the outside corridor and the containment areas. Directional airflow will be provided through the airlock with differential pressure monitoring.

Similar to the BSL–4 requirements, all electrical conduit, plumbing piping, supply and exhaust ducts and miscellaneous penetrations will be sealed at the point of penetration into the BSL–3 laboratory to ensure a tight structure. Tap water entering the BSL–3 laboratories through spigots in the sinks will have backflow preventors to protect the potable water distribution system from contamination. All BSL–3 laboratories will operate under negative air pressure. A dedicated, ducted HVAC system will draw air into the BSL–3 laboratories from the surrounding areas toward and through the BSL–3 laboratories with no recirculation from the laboratories to other areas of the building. This direction of airflow into the laboratories and the biosafety cabinets will be verifiable with appropriate visual and audible alarm systems to notify personnel of HVAC problems or system failure. All air will be discharged outside the building through HEPA filters. Each BSL–3 laboratory will be equipped with Class II biosafety cabinets. Each BSL–3 laboratory will be provided with shower-out facilities for researchers along with autoclaves for solid waste treatment prior to removal. Liquid waste will be chemically decontaminated prior to discharge and solid waste will be sterilized in autoclaves prior to leaving the laboratories.

Work with moderate-risk biological material will be conducted in BSL–2 laboratories. The air supply system will be designed to maintain negative air pressure in relationship to administrative space, offices, and corridors. There will be no HEPA filtration for BSL–2 exhaust. Liquid waste will be chemically decontaminated prior to discharge and solid waste will be sterilized in autoclaves prior to leaving the laboratories.

The design and construction of the NEIDL facility will address security concerns. Security measures are discussed below. Scenarios involving terrorist or intentionally destructive acts at the NEIDL have been analyzed in an independent Threat and Risk Assessment (TRA). The design as well as security plans and procedures of the NEIDL facility will address the TRA analysis and recommendations.

The NEIDL will be surrounded by a protective fencing system that allows for controlled access at staffed checkpoints for both vehicles and pedestrians and to create setbacks of approximately 100 feet from any location that could accommodate unscreened pedestrian traffic. Vehicular access would be strictly limited to BUMC vehicles and selected delivery and service vehicles. The service and loading area will be located on the south side of the facility within the secure perimeter. Pedestrian access to the building will be limited to a single entrance and security officers will be assigned to provide protective services at the site twenty-four hours a day, monitoring both the building and the grounds.

Access to the NEIDL facility will be strictly controlled by various measures. All employees will undergo background and security checks prior to being assigned to a laboratory area. Strict operational protocols, including specific training, would be imposed on laboratory personnel prior to working in the facility. Security officers will be on duty twenty-four hours a day to monitor controlled access. All employees will be required to wear security badges. Furthermore, security cameras will be in use, biometric access systems will be utilized, and all deliveries will be screened.

Access to the BSL–4 laboratory will be restricted to people whose presence is required and authorized. Air pressure resistant, lockable doors will be monitored and controlled by the security system. A log of persons entering and exiting the laboratory with name, time, date, and reason for entering the lab will be maintained and the log would be frequently audited by BUMC's Office of Environmental Health and Safety (OEHS).

Alternatives Considered

The NIH considered the two reasonable alternatives identified and considered in the Final EIS: (1) The Proposed Action Alternative (now the selected alternative) and (2) the No Action Alternative (not constructing the NEIDL). Previously, NIH examined several sites and various facility designs. Sites for the NBL were evaluated if there was a reasonable expectation that a facility could be constructed with the available funding, in a reasonable time, and while meeting federal safety criteria. To meet these constraints, two minimum siting criteria were established. These criteria included: (1) The site must be controlled (owned or currently leased) by Boston University (to remain within funding and timing constraints); and (2) The lot size must be sufficient to accommodate a minimum building size of 190,000 square feet (sf) and at the same time meet federal security setback requirements. Applying the above screening criteria reduced the potential sites for detailed evaluation to four locations and four designs, one of which became the Proposed Action. The three other alternatives considered were a site on the 210 acre BU Corporate Education Center in Tyngsborough, Massachusetts; a site at the BU Charles River Campus; and a site at the BU Sargent Center for Outdoor Education in Petersborough, New Hampshire. These other sites and designs were considered technically inferior, provided no environmental advantage compared to the Proposed Action, or would not meet the purpose and need as efficiently as the Proposed Action. Therefore, they were eliminated from detailed analysis in the EIS.

Factors Involved in the Decision

Several factors were involved in the NIH's decision to proceed with the Proposed Action. Based on analyses in

the Draft EIS, the Supplemental EIS and Final EIS, the Proposed Action best satisfies the stated Purpose and Need, which is to rectify the national shortage of biological containment facilities with laboratories and procedures for handling potentially lethal infectious agents. This national shortage of biological containment facilities represents a substantial impediment to conducting research on infectious diseases and is a national biodefense vulnerability. To be most effective, these facilities must be located where established teams of researchers are already working on related scientific problems. Additionally, the biological containment facilities should be located in an area with existing infrastructure critical to providing timely public health support in the case of a national, state, or local disease outbreak or bioterrorism emergency. Locating a new national biocontainment laboratory at the Boston University Medical Center campus takes advantage of BU's extensive expertise in biological medical research, and its infrastructure as a regional medical center.

Resources Impacts

The Final EIS describes potential environmental effects of the Selected Alternative. These potential effects are documented in Chapter 4 of the Final EIS. Any potential adverse environmental effects will be avoided or mitigated through design elements, procedures, and compliance with regulatory and NIH requirements. Potential impacts on air quality are all within government standards (federal, state, and local). NIH does not expect negative effects on the environment or on the citizens of Boston from construction and operation of the NEIDL.

Summary of Impacts

The following is a summary of potential impacts resulting from the Selected Action that the NIH considered when making its decision. No adverse cumulative effects have been identified during the NEPA process. Likewise, no unavoidable or adverse impacts from implementation of the Selected Action have been identified. The Selected Action will be beneficial to the long-term productivity of the national and world health communities. Biomedical research conducted at the NEIDL facility will have the potential to advance techniques in disease prevention, develop disease immunizations, and prepare defenses against naturally emerging and re-emerging diseases and against bioweapons. Additionally, the local community will benefit from increased employment, income and, government and public finance.

Housing

Temporary impacts during construction are expected to have a minimal effect on the existing residential neighborhoods. The Boston-NBL site is bounded by a regional commercial wholesale florist market on the east, a highway on the south, the Boston University Medical Center on the north, and the BioSquare Phase 1 Research Park on the west. Residential neighborhoods are found north of the site on two side streets off Albany Street and one block north of the site off of Harrison Avenue. Construction traffic will avoid residential areas and rely on Albany Street for access.

With over 250,000 housing units in the City of Boston, the Project would have no adverse impact on housing stock. As required by local ordinance, the Project would participate in the City of Boston's Affordable Housing Program through a contribution to the City's Neighborhood Housing Trust in the amount of approximately $920,000 to be used for the creation of new affordable housing. NIH funds would not be used for this contribution.

Education

The current public school capacity in the South End would be adequate to accommodate the expected minimal growth caused by the Boston-NBL facility.

Transportation

The results of a traffic analysis conducted for the BioSquare Phase II Final Environmental Impact Report/ Project Impact Report (EIR/PIR) demonstrates that the transportation infrastructure is adequate to support the Project. The 70 trips entering and leaving the site during each of the a.m. and p.m. peak hours that are specifically attributed to the NBL represents only 15–16 percent of the additional peak hour traffic; they are not sufficient in and of themselves to change operations significantly at any of the study area locations. The potential introduction of new access to and from the regional highway system would remove existing and future vehicle trips from the congested corridors of Massachusetts Avenue and Albany Street. Traffic flow on the Massachusetts Avenue Connector (MAC) is limited by the signalized intersections at Massachusetts Avenue/ Southampton Street/Melnea Cass Boulevard/MAC and Massachusetts Avenue/Albany Street, which are presently at capacity. By creating an access point to BioSquare from the highway system, the Project would reduce existing and future site generated traffic from these critical intersections.

Community Safety and Risk

Records from the past 21 years of accidents at NIAID laboratories indicate an outstanding record of safety showing that in more than 3 million hours of exposure, there have been only one clinical infection and four silent infections (no manifestation of disease symptoms). In this 21-year period, there has been no agent released from any of these laboratories to cause infection in the general population. Nationwide, there have been no clinical infections from working with BSL–4 agents during the past 31 years at NIAID supported laboratories and no documented cases of a laboratory worker's family members or the public acquiring a disease from NIAID laboratory operations.

Records of all reported laboratory accidents were reviewed from the past ten years by the BUMC Occupational and Environmental Medicine Department and it has been confirmed by that BUMC did not have any laboratory-acquired infections from research work at BSL–2 and BSL–3 with the exception of an incident in 2004 in which three research laboratory workers were accidentally infected with tularemia bacteria in their BSL–2 lab. Corrective actions already identified and implemented to prevent this type of accident from occurring again include increased safety training and procedures for lab workers; strengthened laboratory safety procedures; unannounced safety inspections of BUMC laboratories; applying additional tests and safeguards to infectious material sent to BUMC for research purposes; and working with the Boston Public Health Commission to improve the notification process.

With approximately 14 million hours of operating time in the laboratories during the ten year period described above there were nine incidents of animal bites; sixteen incidents of percutaneous penetration; and two incidents of eye splashes that occurred within BSL–2 laboratories. None of the exposures listed above, with the exception of the tularemia incident led to illness or evidence of serological exposure.

Operation of the NEIDL is expected to result in beneficial human health impacts. The NEIDL facility will allow the development of diagnostic tests, management strategies, and vaccines for a number of emerging viral diseases and agents that may be used to cause intentional harm. The NEIDL facility will also allow for the training of additional scientists in maximum

biocontainment conditions, and increase the laboratory space available for conducting experiments that require maximum containment in response to emerging and re-emerging infectious diseases.

To ensure that the project does not create any adverse public health impacts, an analysis was prepared to address the potential risk to the public of a ''worst case scenario'' involving loss of containment systems in the BSL–4 laboratory that coincides with a release within the facility. A quantitative risk assessment was performed with regard to a theoretical infectious agent release to the surrounding community from the Boston-NBL. The risk assessment examined a laboratory accident within the BSL–4 laboratory that coincided with potential catastrophic failure of containment equipment. The ''worst case scenario'' also included an analysis of a scenario depicting a laboratory acquired infection; a scenario depicting a release due to failure to decontaminate exhaust air; a scenario depicting the escape of an infected animal; a scenario depicting a biological material shipment; and a scenario depicting an unauthorized removal of biological material from containment area. The results of these studies showed the predicted maximum exposure to any member of the community from the ''worst case scenario'' is 0.29 spores over the entire duration of the event. As the exposure to a partial spore is not feasible, the risk of public harm is so minute that it may be described as negligible.

In order to address the concerns about community safety that were raised in public comments, the NIH prepared an additional risk assessment. An additional exposure modeling strategy was applied to the proposed Boston University site. The ''Maximum Possible Risk'' or MPR model was developed by the NIH in response to comments from the public. Fifteen different scenarios were subjected to analysis using the MPR model. The MPR model analysis included three scenarios depicting spills and work disruptions; one scenario depicting a spill on the floor with no HEPA filter in the HVAC system; one scenario depicting a spill on the floor during a power outage; two scenarios depicting physical removal of biological material; two scenarios depicting fire; and seven scenarios depicting explosions. The conclusions of the MPR model showed that all fifteen scenarios had no probability of public health harm.

In summary, twenty-one different risk scenarios, six in the original risk assessment and fifteen in the supplemental risk assessment, were examined in total. All twenty-one scenarios supported the conclusion that the facility poses negligible risk to the community.

Employment

The Boston-NBL facility will create approximately 1,300 temporary construction jobs and 660 new permanent positions. These new positions include all types and levels including environmental services, lab technicians, scientists, and administrative staff. The majority of positions would require skilled and experienced workers.

During construction, the project will comply with the City of Boston Jobs Policy through the creation of a Boston Residents Construction Plan, establishing goals for the recruitment of local residents for construction employment.

BUMC is committed to working with City agencies to ensure that Boston residents have the opportunity to benefit from the new employment generated by the facility. Toward this end, there would be opportunities for local residents to obtain training for various positions, such as laboratory staff, which would in turn benefit the local economy. The Boston-NBL facility will contribute approximately $185,000 to the City of Boston's Neighborhood Jobs Trust for training purposes.

Income

The Boston-NBL facility, like other BUMC facilities, would bring large infusions of outside money to the area to finance the laboratory's work. The NEIDL will have positive economic impact on the South End and surrounding neighborhoods throughout the construction and operation phases. The total direct wages to be paid per year at the Boston-NBL is projected to be $33,000,000, of which 21.4%, or a total of $7,062,000, is expected to go to Boston residents.

Environmental Justice

During the construction phase of the project, neighborhoods immediately abutting the Project site, including Environmental Justice communities (communities where 25% or more of the population is defined as a minority), may experience temporary impacts from construction because of their location and proximity. There will be no disproportionate effect on Environmental Justice communities. The project will develop a Construction Management Plan to minimize construction related transportation impacts.

The worst case scenario analysis shows that during operations of the laboratory there will be negligible risk to public health for the entire community. Therefore, there will be no disproportionate impact on Environmental Justice communities during operations.

Visual Quality

The project has been designed to complement the existing urban design context of the project area. The site plan and massing of the project would help to mend the irregular urban edge that now exists along Albany Street. The site design and building massing have been reviewed with the Boston Redevelopment Authority (BRA) urban design staff as part of the design review process to assure compliance with BRA guidelines and recommendations.

Noise

Construction of the project will result in a temporary increase in daytime sound levels near the site. The maximum L_{10} (sound level exceeded 10% of the time) during construction is estimated to be 71 dBA, which complies with the City of Boston Noise Control Regulation that permits L_{10} levels from construction operations to exceed 75 dBA. To reduce noise from construction the project would install high-grade mufflers on the diesel powered construction equipment and generators; combine noisy operations to occur for short durations during the same time periods; and perform construction activities only between the hours of 7 a.m. to 5 p.m.

Air Quality

The laboratory exhaust system will be designed to avoid any air quality impacts inside or outside the building under normal operations. The potential air quality effects from the laboratories will be minimized by: (1) Combining the exhaust vents from the internal laboratory hoods into groups before connecting to rooftop exhaust fans, thus providing enhanced dilution of any laboratory chemical emissions before they reach ambient air; (2) designing the rooftop stacks to have exit velocities of at least 3,000 feet per minute as a stack exit velocity of this magnitude would be sufficient to avoid stack tip downwash, a phenomenon in which the emissions from the stack are drawn downward as strong winds blow by the stack; (3) carefully controlling and limiting the storage of all chemicals within the building to minimize chemical emissions, liquid chemicals would not be left exposed to the air and would always be contained and transferred

within closed glassware; and (4) handling liquid chemicals in small quantities to reduce the potential air quality impacts in the event of an accidental spill.

The National Ambient Air Quality Standards (NAAQS) were established to protect public health and welfare, with a margin for safety. An air quality dispersion modeling analysis was performed for the generators, boilers and laboratory vents at the Boston-NBL in accordance with the U.S. EPA and state Department of Environmental Protection (DEP) modeling guidelines. The dispersion modeling results demonstrated that the maximum cumulative concentrations of criteria air pollutants from the boilers and generators, modeled with the existing interactive sources, and with background air pollutant concentrations added, will be safely in compliance with the NAAQS for all of the criteria air pollutants analyzed.

During the construction period, the project will comply with the state DEP Diesel Retrofit Program to reduce emissions from construction-related vehicle exhaust.

Wastewater/Water Supply

The daily sewage flows are estimated at 45,825 gallons per day (gpd) based on existing flows at similar BUMC labs. The project does not require improvements to existing sewage infrastructure. Sanitary sewage for the proposed project would be carried by the New Albany Street Interceptor, which is designed to carry a theoretical flow of 16 million gallons per day (mgd). This project anticipates a total new daily flow of 45,825 gpd, or approximately 0.29% of the theoretical capacity of the interceptor. The estimated peak sewage flow of 137,475 gpd would be approximately 0.86% of the system capacity. At the time the New Albany Street Interceptor was designed, much larger flows were expected from this area. Accordingly, there is more than sufficient capacity in the system to accommodate the additional flows from this project and the project will have no adverse effects on existing wastewater systems

The Boston-NBL will have a segregated plumbing system that will carry laboratory wastewater from every non-BSL–4 area to mixing tanks in the basement where pH adjustment and compliance sampling would occur prior to discharge to the sanitary system. The BSL–4 areas of the Boston-NBL building would feature a sterilization system designed to use heat to kill any biological agents that might exist in the wastewater from these BSL–4 areas. The sterilized effluent from the BSL–4 areas will be cooled and neutralized before discharge. The discharges from the facility will have no adverse effect on the wastewater treatment system.

Existing public water supply systems have been significantly upgraded in the past several years and has more than adequate capacity to service the Boston-NBL. The project will have no adverse effect on water supply.

Historic Resources

The proposed project will be sited in an area of large commercial, industrial and institutional uses near the South End Landmark District and National Register District. The Project is located within the South End Harrison/Albany Protection Area, which covers a transitional area adjacent to the above districts. The proposed Project meets the goals of the Protection Area and thus has no adverse effects on historic resources.

Practicable Means To Avoid or Minimize Potential Environmental Harm From the Selected Alternative

All practicable means to avoid or minimize adverse environmental effects from the Selected Action have been identified and incorporated into the action. The proposed NEIDL facility will be subject to the existing BUMC pollution prevention, waste management, and safety, security, and emergency response procedures as well as existing environmental permits. Best management practices, spill prevention and control, and stormwater management plans will be developed and followed to appropriately address the construction and operation of the NEIDL and comply with applicable regulatory and NIH requirements. No additional mitigation measures have been identified.

Pollution Prevention

Pollution prevention measures are described in Chapter 2 of the FEIS and reflect standard spill prevention procedures. Additional pollution from the NEIDL facility is not anticipated. Air quality permit standards will be met, as will all federal, state, and local requirements to protect the environment and public health. Additional pollution prevention methods will include:

Reducing construction waste by recycling materials wherever possible;

Water efficient landscaping; and

Adhering to current BUMC waste management practices.

Monitoring and Enforcement Program for Mitigation Measures

During the preparation of the FEIS, several potential environmental issues associated with implementation of the Selected Alternative were identified.

The local community is concerned about transportation impacts. Transportation of agents to and from the NEIDL is a concern for some. Strict rules and regulations govern how agents are packaged, labeled, handled, tracked, and transported. The transportation of agents will comply with all rules and regulations. According to the World Health Organization (WHO), worldwide, there have never been any cases of illness attributable to the release of infectious materials during transportation. There have been reports of damage to outer packaging. The risk to the community from the transport of infectious agents or other biologically-derived material is negligible.

Emergency planning was raised as a concern. BUMC has an existing Incident Command System and a detailed Disaster Operations Plan that is regularly reviewed and will be revised to include the operations of the NEIDL. Emergency responders in the area are confident that they will be capable of handling emergency situations.

In addition, possible adverse health and safety impacts on laboratory workers in the NEIDL and on nearby residents during the operational phase of the project were evaluated. The risks were deemed to be negligible and mitigable through adherence to guidelines outlined in the current edition of Biosafety in Microbiological and Biomedical Laboratories, a joint publication of the NIH and CDC, as well as other standards for safe operational practices.

Conclusion

Based upon review and careful consideration, the NIH has decided to implement the Selected Alternative to partially fund the construction of a state-of the-art national biocontainment laboratory, which will be known as the National Emerging Infectious Diseases Laboratories (NEIDL) on the Boston University Medical Campus (BUMC) in Boston, Massachusetts.

The decision was based upon review and careful consideration of the impacts identified in the Final EIS and public comments received throughout the NEPA process. The decision was also based on BUMC's extensive expertise in biological medical research, its experience in operating BSL–2, and –3 laboratories, and its infrastructure as a regional medical center being able to

fulfill the purpose and need to provide national biocontainment facilities. Other relevant factors included in the decision, such as NIAID's mandate to conduct and support research on agents of emerging and re-emerging infectious diseases, were carefully considered.

Dated: January 26, 2006.

Juanita M. Mildenberg,

FAIA Acting Director, Office of Research Facilities Development and Operations, National Institutes of Health.

[FR Doc. E6–1402 Filed 2–1–06; 8:45 am]

BILLING CODE 4140–01–P

DEPARTMENT OF HEALTH AND HUMAN SERVICES

National Institutes of Health

Notice of Meeting: Secretary's Advisory Committee on Genetics, Health, and Society

Pursuant to Public Law 92–463, notice if hereby given of the ninth meeting of the Secretary's Advisory Committee on Genetics, Health, and Society (SACGHS), U.S. Public Health Service. The meeting will be held from 9 a.m. to 5 p.m. on March 27, 2006 and 9 a.m. to 5 p.m. on March 28, 2006 at the National Institutes of Health, Building 31, C Wing, Conference Room 6, 31 Center Drive, Bethesda, MD 20892. The meeting will be open to the public with attendance limited to space available. The meeting will be webcast.

The first day of the meeting will include sessions on pharmacogenomics and large population studies of genetic variation, the environment and common disease. The pharmacogenomics session will include a review of Federal efforts in pharmacogenomics and deliberation on draft recommendations in this area. The large population studies session will involve discussion of a draft report that identifies policy issues associated with mounting a large population study in the United States.

The second day will be devoted to sessions on genetic discrimination and patents and licensing issues. The genetic discrimination session will include an update on the status of Federal genetic non-discrimination legislation. The patents and licensing session will involve a presentation on the findings and conclusions of a National Academy of Sciences' report on intellectual property rights in genomic research and innovation, and a discussion on whether there are other issues in this arena that warrant SACGHS's further attention.

Time will be provided each day for public comments. The Committee would welcome hearing from anyone wishing to provide public comment on any issue related to genetics, health and society. Individuals who would like to provide public comment or who plan to attend the meeting and need special assistance, such as sign language interpretation or other reasonable accommodations, should notify the SACGHS Executive Secretary, Ms. Sarah Carr, by telephone at 301–496–9838 or e-mail at *sc112@nih.gov*. The SACGHS office is located at 6705 Rockledge Drive, Suite 750, Bethesda, MD 20892.

Under authority of 42 U.S.C. 217a, Section 222 of the Public Health Service Act, as amended, the Department of Health and Human Services established SACGHS to serve as a public forum for deliberations on the broad range of human health and societal issues raised by the development and use of genetic technologies and, as warranted, to provide advice on these issues. The draft meeting agenda and other information about SACGHS, including information about access to the webcast will be available at the following Web site: *http://www4.od.nih.gov/oba/sacghs.htm*.

Dated: January 26, 2006.

Anna Snouffer,

Acting Director, Office of Federal Advisory Committee Policy.

[FR Doc. 06–979 Filed 2–1–06; 8:45 am]

BILLING CODE 4140–01–M

DEPARTMENT OF HEALTH AND HUMAN SERVICES

National Institutes of Health

Notice of Meeting: Secretary's Advisory Committee on Genetics, Health, and Society

Pursuant to Public Law 92–463, notice is hereby given of the ninth meeting of the Secretary's Advisory Committee on Genetics, Health, and Society (SACGHS), U.S. Public Health Service. The meeting will be held from 9 a.m. to 5 p.m. on March 27, 2006 and 9 a.m. to 5 p.m. on March 28, 2006 at the National Institutes of Health, Building 31, C Wing, Conference Room 6, 31 Center Drive, Bethesda, MD 20892. The meeting will be open to the public with attendance limited to space available. The meeting will be webcast.

The first day of the meeting will include sessions on pharmacogenomics and large population studies of genetic variation, the environment and common disease. The pharmacogenomics session will include a review of Federal efforts in pharmacogenomics and deliberation on draft recommendations in this area. The large population studies session will involve discussion of a draft report that identifies policy issues associated with mounting a large population study in the United States.

The second day will be devoted to sessions on genetic discrimination and patents and licensing issues. The genetic discrimination session will include an update on the status of Federal genetic non-discrimination legislation. The patents and licensing session will involve a presentation on the findings and conclusions of a National Academy of Sciences report on intellectual property rights in genomic research and innovation, and a discussion of whether there are other issues in this area that warrant SACGHS's further attention.

Time will be provided each day for public comments. The Committee would welcome hearing from anyone wishing to provide public comment on any issue related to genetics, health and society. Individuals who would like to provide public comment or who plan to attend the meeting and need special assistance, such as sign language interpretation or other reasonable accommodation, should notify the SACGHS Executive Secretary, Ms. Sarah Carr, by telephone at 301–496–9838 or e-mail at *sc112c@nih.gov*. The SACGHS office is located at 6705 Rockledge Drive, Suite 750, Bethesda, MD 20892.

Under authority of 42 U.S.C. 217a, Section 222 of the Public Health Service Act, as amended, the Department of Health and Human Services established SACGHS to serve as a public forum for deliberations on the broad range of human health and societal issues raised by the development and use of genetic technologies and, as warranted, to provide advice on these issues. The draft meeting agenda and other information about SACGHS, including information about access to the webcast will be available at the following Web site: *http://www4.od.nih.gov/oba/sacghs.htm*.

Dated: January 26, 2006.

Anna Snouffer,

Acting Director, Office of Federal Advisory Committee Policy.

[FR Doc. 06–978 Filed 2–1–06; 8:45 am]

BILLING CODE 4140–01–M

DEPARTMENT OF HEALTH AND HUMAN SERVICES

National Institutes of Health

National Center for Research Resources; Notice of Closed Meeting

Pursuant to Section 10(d) of the Federal Advisory Committee Act, as amended (5 U.S.C. Appendix 2), notice is hereby given of the following meeting.

The meeting will be closed to the public in accordance with the provisions set forth in sections 552b(c)(4) and 552b(c)(6), Title 5 U.S.C., as amended. The grant applications and the discussions could disclose confidential trade secrets or commercial property such as patentable material, and personal information concerning indviduals associated with the grant applications, the disclosure of which would constitute a clearly unwarranted invasion of personal privacy.

Name of Committee: National Center for Research Resources Special Emphasis Panel; Biotechnology SEP.

Date: February 23, 2006.

Time: 2 p.m. to 4 p.m.

Agenda: To review and evaluate grant applications.

Place: National Institutes of Health, One Democracy Plaza, 6701 Democracy Boulevard, Bethesda, MD 20892 (Telephone Conference Call).

Contact Person: Guo Zhang, PhD, MPH, Scientific Review Administrator, Office of Review, National Center for Research Resources, National Institutes of Health, 6701 Democracy Blvd., Suite 1064, Bethesda, MD 20892–796. 301–435–0812. *zhanggu@mail.nih.gov.*

(Catalogue of Federal Domestic Assistance Program Nos. 93.306, Comparative Medicine; 93.333, Clinical Research; 93.371, Biomedical Technology; 93.389, Research Infrastructure; 93.306, 93.333, National Institutes of Health, HHS)

Dated: January 26, 2006.

Anna Snouffer,

Acting Director, Office of Federal Advisory Committee Policy.

[FR Doc. 06–977 Filed 2–1–06; 8:45 am]

BILLING CODE 4140–01–M

DEPARTMENT OF HOMELAND SECURITY

Customs and Border Protection

Agency Information Collection Activities; Extension of Existing Information Collection; Comment Request

ACTION: 30-Day Notice of Information Collection Under Review: Screening Requirements of Carriers; OMB Control No. 1651–0122.

The Department of Homeland Security, U.S. Customs and Border Protection (CBP) has submitted the following information collection request to the Office of Management and Budget (OMB) for review and clearance in accordance with the Paperwork Reduction Act of 1995. The information collection was previously published in the **Federal Register** on September 30, 2005, at 70 FR 57305. The notice provided for an emergency request for approval by OMB and allowed for a 60-day public comment period. No comments were received on this information collection.

The purpose of this notice is to allow an additional 30 days for public comments. Comments are encouraged and will be accepted until March 6, 2006. This process is conducted in accordance with 5 CFR 1320.10.

Written comments and/or suggestions regarding the item(s) contained in this notice, especially regarding the estimated public burden and associated response time, should be directed to the Department of Homeland Security (DHS), USCIS, Director, Regulatory Management Division, Clearance Office, 111 Massachusetts Avenue, 3rd floor, Washington, DC 20529. Comments may also be submitted to DHS via facsimile to 202–272–8352 or via e-mail at *rfs.regs@dhs.gov*. When submitting comments by e-mail please make sure to add OMB Control Number 1651–0122 in the subject box. Written comments and suggestions from the public and affected agencies should address one or more of the following four points:

(1) Evaluate whether the proposed collection of information is necessary for the proper performance of the functions of the agency, including whether the information will have practical utility;

(2) Evaluate the accuracy of the agency's estimate of the burden of the proposed collection of information, including the validity of the methodology and assumptions used;

(3) Enhance the quality, utility, and clarity of the information to be collected; and

(4) Minimize the burden of the collection of information on those who are to respond, including through the use of appropriate automated, electronic, mechanical, or other technological collection techniques or other forms of information technology, *e.g.*, permitting electronic submission of responses.

Overview of This Information Collection

(1) *Type of Information Collection:* Extension of a currently approved collection.

(2) *Title of the Form/Collection:* Screening Requirements of Carriers.

(3) *Agency form number, if any, and the applicable component of the Department of Homeland Security sponsoring the collection:* No Agency Form Number; U.S. Customs and Border Protection (CBP).

(4) *Affected public who will be asked or required to respond, as well as a brief abstract:* Primary: Business or other for-profit. The evidence collected is used by DHS to determine whether sufficient steps were taken by a carrier demonstrating improvement in the screening of its passengers in order for the carrier to be eligible for automatic fines mitigation.

(5) *An estimate of the total number of respondents and the amount of time estimated for an average respondent to respond:* 65 responses at 100 hours per response.

(6) *An estimate of the total public burden (in hours) associated with the collection:* 6,500 annual burden hours.

If you have additional comments, suggestions, or need a copy of the proposed information collection instrument with instructions, or additional information, please contact Mr. Richard A. Sloan, 202–272–8354, U.S. Citizenship and Immigration Services, Director, Regulatory Management Division, 111 Massachusetts Avenue, 3rd Floor., Washington, DC 20529. Additionally, comments and/or suggestions regarding the item(s) contained in this notice, especially regarding the estimated public burden and associated response time may also be directed to Mr. Richard A. Sloan.

Dated: January 31, 2006.

Stephen Tarragon,

Deputy Director, Regulatory Management, Division, U.S. Citizenship and Immigration Services.

[FR Doc. 06–1010 Filed 1–31–06; 1:14 pm]

BILLING CODE 4410–10–P

DEPARTMENT OF THE INTERIOR

Bureau of Indian Affairs

Guidance for Distributing Fiscal Year 2006 Contract Support Funds and Indian Self-Determination Funds

AGENCY: Bureau of Indian Affairs, Interior.

ACTION: Notice of methodology for distribution and use of FY 2006

Contract Support Funds and Indian Self-Determination Funds.

SUMMARY: The Bureau of Indian Affairs (Bureau) is publishing this notice to inform the public, the tribes, and Federal staff of the methodology that will be used for the distribution of Contract Support Funds (CSF) and Indian-Self Determination Funds (ISDF) for FY 2006. These funds are distributed as authorized by the Indian Self-Determination and Education Assistance Act of 1975, as amended, and financed with funds appropriated under the Snyder Act. This distribution methodology is published to ensure eligible recipients and responsible federal employees are aware of program operations for this fiscal year. This is a guidance document, it is not establishing regulations.

DATES: The ''FY 2006 CSF Needs Report'' is due June 30, 2006. Final distribution of CSF will be made on a pro-rata basis on or about July 15, 2006. FY 2006 ISDF will be distributed on a first come, first served basis, until funds are depleted.

ADDRESSES: Submit the ''FY 2006 CSF Needs Report'' to: Harry Rainbolt, Bureau of Indian Affairs, Office of Tribal Services, 1951 Constitution Avenue NW, Mail Stop 320–SIB, Washington, DC 20240.

FOR FURTHER INFORMATION CONTACT: Harry Rainbolt, (202) 513–7630.

SUPPLEMENTARY INFORMATION: Title I and title IV of Public Law 93–638, the Indian Self-Determination and Education Assistance Act of 1975, as amended, authorizes the Bureau to annually distribute CSF and ISDF. In making these distributions for FY 2006, the Bureau will follow the procedures in this notice.

The request for FY 2006 ISDF for new and expanded contracts and self-governance funding agreements may be submitted to the Bureau throughout the year as the need arises. Approved requests will be funded until the ISDF is depleted.

Part 1—Contract Support Funds

1.1 What Is the Purpose of Contract Support Funds (CSF)?

The Bureau provides CSF to meet the indirect cost need identified for ongoing/existing self-determination contracts and self-governance compacts that are financed with funds appropriated pursuant to the Snyder Act (25 U.S.C. 13). [Note that 25 U.S.C. 450j–3, restricts the use of CSF for only self-determination contracts and self-governance compacts. Congress directed in the FY 2006 appropriations bill, however, that the Secretary continue to distribute indirect and administrative cost funds to tribes and tribal organizations that received such funds in FY 2003 or FY 2004.]

1.2 How Does BIA Determine Eligibility for CSF?

All self-determination contractors and self-governance tribes/consortia with either an approved indirect cost rate, a current indirect cost proposal on file with the National Business Center (NBC), or an approved current lump sum agreement are eligible to receive CSF.

1.3 How Does the Bureau Determine Indirect Cost Need and CSF Amounts for Contracts and Annual Funding Agreements?

The methodology used to determine indirect cost amount and CSF need is as follows:

(1) Total current year Program fund amount;

(2) Less exclusions; exclusions are determined as follows:

(a) For Construction under Public Law 93–638, as amended, title I, section 106(h), the amount of construction funding provided for the actual ''on-the-ground'' construction activities is an exclusion.

(b) For a Direct Cost Base consisting of Salaries and Wages, all costs except ''Salaries and Wages'' are exclusions.

(c) For a Direct Cost Base consisting of ''total direct costs less capital expenditures and pass-through, such as those items requiring minimal administrative effort,'' capital expenditures and pass-through items are considered exclusions.

Capital Expenditure: The acquisition of items of personal property with an individual value of $5,000 or more, and real property acquisition, renovation or repair with a value of $5,000 or more.

Pass-Through: Those program expenditures for items requiring minimal level of effort to be performed by tribal administrative personnel, such as: grants to individuals (*i.e.*, scholarship grants, general assistance grants, etc.); leases; subcontracts; management and/or professional agreements; etc.

(3) Direct Cost Base amount;

(4) Times indirect cost rate;

(5) Indirect cost amount;

(6) Times current CSF funding percentage; and

(7) CSF amount.

1.4 What Is Designated as an Ongoing/Existing Contract or Funding Agreement?

An ongoing/existing contract or annual funding agreement is a Bureau program operated under a self-determination contract or a self-governance compact on an ongoing basis, which was entered into before the current fiscal year. Examples:

(1) All contracted or compacted programs, functions, services, activities or those included in annual funding agreements in the previous fiscal year and continued in the current fiscal year that are financed with funds appropriated to the Bureau;

(2) Direct funding increases for programs financed with funds appropriated to the Bureau; and

(3) Programs, functions, services, or activities started or expanded in the current fiscal year that are a result of a change in priorities from other already contracted, annual funding agreement programs, functions, services, or activities financed with funds appropriated to the Bureau.

1.5 Does an Increase or Decrease in the Level of Funding From Year to Year Affect the Designation of a Contract or Annual Funding Agreement?

No.

1.6 Can I Use Current Fiscal Year CSF to Pay a Prior Year Indirect Cost Shortfall?

No. The use of current year CSF to pay prior year indirect cost shortfall is not authorized.

1.7 Are There Any Restrictions on Distributing CSF for Indirect Cost?

Yes. The following conditions must be met before the Bureau distributes CSF to pay indirect cost:

(1) Programs, functions, services, activities, or portions thereof, must be financed with funds appropriated under the Snyder Act (25 U.S.C. 13); and

(2) Programs, functions, services, activities, or portions thereof, must be included in a Bureau self-determination contract or a self-governance funding agreement.

1.8 Is There Any Other Exclusion?

Yes. Self-determination contracts or self-governance agreements that receive appropriated funds from other Department of the Interior bureaus, offices, or other sources are not eligible to receive CSF.

1.9 How Can Tribes or Tribal Organizations Find Funding to Pay for Their Indirect Cost Needs for Programs That Are Excluded From Receiving CSF?

Those programs that are not eligible to receive CSF or ISDF to cover indirect cost needs must contact the specific program funding source to determine the methodology for covering the

indirect cost need for those programs. This may entail using funds provided for the contracted services to cover the indirect cost need. For example, funding for Indian Reservation Roads construction is transferred to the Bureau from the Federal Highway Trust Fund by the Department of Transportation. Therefore, this program is excluded from receiving CSF to cover the indirect cost need and must use funds provided for the construction activity to cover their indirect cost needs.

1.10 How Does the Bureau Determine the Amount of CSF a Tribe or Tribal Organization Is Eligible To Receive?

See the computation methodology in section 1.3 of this notice.

1.11 How Does the Bureau Decide What Direct Cost Base To Use To Determine CSF Need?

BIA will use the following procedures to determine the direct cost base:

If a tribe's direct cost base is	Then BIA will make the following adjustments
(1) Total direct cost, less capital expenditures and pass-through	(1) Total direct cost, minus exclusions = direct cost base amount. (Exclusions will be on-the-ground construction costs, capital expenditures and pass-through.)
(2) Total salaries and wages	(2) Look at program budget and identify amount for salaries and wages. (The exclusions will be funding amounts for everything except salaries and wages.)
(3) A negotiated Lump Sum Agreement direct cost base is the total current year program funds, less amount for on-the-ground construction costs, capital expenditures and pass-through.	(3) The exclusions will be amounts for on-the-ground construction costs, capital expenditures and pass-through funds.

1.12 How Does the Bureau Determine What Indirect Cost Rate To Use When Calculating the Amount of CSF Eligible Tribes or Tribal Organizations Will Receive?

When calculating the amount of CSF eligible tribes or tribal organizations will receive, BIA follows the following procedures:

If	Then
(1) The tribe or tribal organization has an approved indirect cost rate negotiated with the National Business Center (NBC) or an indirect cost proposal currently under consideration by the NBC.	(1) The Regional Director or Office of Self-Governance Director must use the tribe's or tribal organization's current rate, if approved, or, if not approved, the proposed indirect cost rate currently under consideration.
(2) The tribe or tribal organization proposes to use the prior-year approved rate*.	(2) The most current rate must be used.*
(3) A tribe or tribal organization that can document that they are unable to negotiate an indirect cost rate because of circumstances beyond their control may request negotiation of a lump sum amount**.	(2) The Awarding Official may negotiate a reasonable lump sum amount (not to exceed 15%) with the tribe or tribal organization for FY 2005.**

*This rate is temporary and subject to finalization through negotiation with NBC, and may result in actual over or under recovery of indirect cost.

**Beginning in FY 2004, a reasonable lump sum amount must not exceed 15 percent of total current year program funds, less capital expenditure and pass-through.

1.13 What Happens if the Amount Identified in the ''FY 2006 CSF Needs Report'' Exceeds the Available FY 2006 CSF Amount?

The CSF distribution will be made on a pro rata basis so that all eligible tribes and tribal organizations receive the same percentage of their reported need. For example, if the pro rata amount is 92 percent, each tribe or tribal organization will receive 92 percent of their identified indirect cost need.

1.14 Who Is Responsible for Submitting the ''CSF Needs Report'' to the Bureau?

Each regional office and the Office of Self-Governance must submit a ''CSF Needs Report'' for ongoing/existing contracts and funding agreements.

1.15 How Does the Bureau Distribute CSF to Tribes and Tribal Organizations?

(1) In the initial distribution of CSF, the Bureau will distribute to each regional office and the Office of Self-Governance 85 percent of the total amount of CSF provided in the previous fiscal year. From this 85 percent, the regional office will award 75 percent of the CSF need identified for each contract or annual funding agreement that meets the established criteria.

(2) In the second or final allotment of CSF, all tribal contractors and self-governance tribes/consortia will receive a pro-rated share of the CSF, based on the program funds in the contract or annual funding agreement at that time.

1.16 What Can I Do To Cover My Total CSF Needs if the CSF Provided Is Insufficient?

If your CSF funds are insufficient, you may reprogram funds provided for the operation of programs to make up deficiencies to recover your full indirect cost need. This reprogramming authority is limited to funds in the Tribal Priority Allocation (TPA) portion of the Bureau budget, or annual funding agreement.

1.17 Can Funds From Other Bureau Programs That Are Not in the TPA Be Used To Meet CSF Shortfall?

No. Congressional appropriation language does not provide authority for the Bureau to reprogram funds from other Bureau programs to meet any CSF shortfall.

1.18 What Are the Definitions of the Terms ''New Contract or Annual Funding Agreement'' and ''Expanded Contract or Annual Funding Agreement''?

(a) A new contract or annual funding agreement is defined as the initial transfer of a program, function, service, or activity previously operated by the Bureau to a tribe, tribal organization or consortium.

(b) An expanded contract or annual funding agreement is defined as a contract or annual funding agreement which has become enlarged, during the current fiscal year through the assumption of additional programs, functions, services, or activities (or portion thereof) previously operated by the Bureau.

Part 2—Indian Self-Determination Funds

2.1 How Are Indian Self-Determination Funds (ISDF) Distributed?

The Bureau provides ISDF on a ''first-come, first-served'' basis. The Bureau will fund requests at 100 percent of the ''identified and approved need'' until the ISDF is depleted.

2.2 How Does the Bureau Distribute ISDF For a New and Expanded Contract or Annual Funding Agreement?

Each regional office or the Office of Self-Governance must submit an ''ISDF Needs Request'' to the Office of Tribal Services when a new contract or annual funding agreement is awarded, or existing contracts or annual funding agreements are expanded.

2.3 What Must a Complete ''ISDF Request Package'' for New and Expanded Contracts/Annual Funding Agreements Contain?

A complete request package for new/expanded contracts or annual funding agreement must contain:

(1) Indirect cost needs; and

(2) Startup cost needs.

2.4 What Happens if Requests Are Received After the ISDF Have Been Depleted?

The ISDF request will not be funded for the fiscal year. However, requests received after the ISDF have been depleted will be considered first for ISDF funding in the following fiscal year.

2.5 How Does the Bureau Compute the Indirect Cost Need?

We compute the indirect cost need following the indirect cost computation methodology provided in this announcement at section 1.3.

2.6 How Does BIA Determine What Indirect Cost Rate To Use When Calculating the Amount of ISDF Eligible Tribes or Tribal Organizations Will Receive?

When calculating the amount of ISDF eligible tribes or tribal organizations will receive, the Bureau follows the following procedures:

If	Then
(1) The tribe or tribal organization has an approved indirect cost rate negotiated with the National Business Center (NBC) or an indirect cost proposal currently under consideration by the NBC.	(1) The Regional Director or Office of Self-Governance Director must use the tribe's or tribal organization's current rate, if approved, or, if not approved, the proposed indirect cost rate currently under consideration.
(2) The tribe or tribal organization proposes to use the prior-year approved NBC rate*.	(2) The most current NBC rate must be used.*
(3) A tribe or tribal organization that can document that they are unable to negotiate an indirect cost rate because of circumstances beyond their control may request negotiation of a lump sum amount**.	(3) The Awarding Official may negotiate a reasonable lump sum amount (not to exceed 15 percent) with the tribe or tribal organization for FY 2004.**

*This rate is temporary and subject to finalization through negotiation with NBC, and may result in actual over or under recovery of indirect cost.

**Beginning in FY 2004, a reasonable lump sum amount must not exceed 15 percent of total current year program funds, less capital expenditure and pass-through.

2.7 What Is Considered ''Startup Cost'' Need?

Startup costs are direct costs for items that are identified in the program operational budget for the new or expanded contract/annual funding agreements. These costs must be allowable costs, allocable to the new or expanded program, and reasonable within the context of the operational budget.

2.8 What Information for a ''Startup Cost'' Request Must I Include in the ISDF Request Package?

The request must contain:

(1) A copy of the program operational budget for the new or expanded contract/annual funding agreement activity, with the startup cost items identified;

(2) A copy of the program operational budget narrative; and

(3) Documentation of the provision of technical assistance and negotiation in regard to the startup cost items.

2.9 Will the Bureau Consider Funding Requests That Do Not Meet the Requirement of Section 2.8?

No. The Bureau will not consider funding ISDF requests that do not contain the items in section 2.8 of this notice.

2.10 Are There Any Contracts or Agreements That Cannot Receive ISDF?

Yes. Self-determination contracts or self-governance agreements that receive appropriated funds from other Department of the Interior bureaus, offices, or other sources are not eligible to receive ISDF.

2.11 Are There Any Guidelines That Can Be Used To Help Provide Technical Assistance?

Yes. Use the ''Guidance for Contract Support Costs'' handbook to assist in the negotiation and providing technical assistance for startup cost. You may obtain a copy of this handbook by calling the telephone number provided in the **FOR FURTHER INFORMATION CONTACT** section.

2.12 What Happens to an Incomplete ISDF Request?

The request will be returned to the office of origin for proper completion and resubmission.

Dated: January 18, 2006.

Michael D. Olsen,

Acting Principal Deputy Assistant Secretary—Indian Affairs.

[FR Doc. E6–1393 Filed 2–1–06; 8:45 am]

BILLING CODE 4310–4J–P

DEPARTMENT OF THE INTERIOR

Bureau of Indian Affairs

Pueblo of Nambé Liquor Ordinance

AGENCY: Bureau of Indian Affairs, Interior.

ACTION: Notice.

SUMMARY: This notice publishes the Pueblo of Nambé Liquor Ordinance. The Ordinance regulates and controls the possession, sale and consumption of liquor within the Pueblo of Nambé Indian Reservation. The Reservation is located on trust land and this Ordinance allows for the possession and sale of alcoholic beverages within the exterior boundaries of the Pueblo of Nambé Indian Reservation. This Ordinance will increase the ability of the tribal government to control the community's liquor distribution and possession, and at the same time will provide an important source of revenue for the continued operation and strengthening of the tribal government and the delivery of tribal services.

DATES: *Effective Date:* This Ordinance is effective on February 2, 2006.

FOR FURTHER INFORMATION CONTACT: Iris Drew, Tribal Government Services Officer, Southwest Regional Office, 1001 Indian School Road, Albuquerque, New Mexico 87104, Telephone (505) 563–3530; Fax (505) 563–3060; or Ralph Gonzales, Office of Tribal Services, 1951 Constitution Avenue, NW., Mail Stop 320-SIB, Washington, DC 20240; Telephone (202) 513–7629.

SUPPLEMENTARY INFORMATION: Pursuant to the Act of August 15, 1953, Public Law 83–277, 67 Stat. 586, 18 U.S.C. 1161, as interpreted by the Supreme Court in *Rice* v. *Rehner,* 463 U.S. 713 (1983), the Secretary of the Interior shall certify and publish in the **Federal Register** notice of adopted liquor ordinances for the purpose of regulating liquor transactions in Indian country. The Nambé Tribal Council adopted its Liquor Ordinance by Resolution No. NP–2005–27 on November 30, 2005. The purpose of this Ordinance is to govern the sale, possession and distribution of alcohol within the Pueblo of Nambé Indian Reservation.

This notice is published in accordance with the authority delegated by the Secretary of the Interior to the Principal Deputy Assistant Secretary—Indian Affairs. I certify that this Liquor Ordinance of the Pueblo of Nambé was duly adopted by the Tribal Council on November 30, 2005.

Dated: January 27, 2006.

Michael D. Olsen,

Acting Principal Deputy Assistant Secretary—Indian Affairs.

The Pueblo of Nambé Liquor Ordinance reads as follows:

Pueblo of Nambé Liquor Ordinance 2005

1. *Purpose.* The purpose of the Pueblo of Nambé Liquor Ordinance is to establish limitations and standards for the legalization of the introduction, sale and possession of alcohol within the Pueblo of Nambé lands as a means to provide revenue to serve the best interests of the Pueblo.

2. *Definitions.* As used in this Ordinance, the following definitions shall apply:

A. ''Alcohol'' or ''Liquor'' includes the four varieties of liquor commonly referred to as alcohol, spirits, wine, and beer, and all fermented, spirituous, vinous, or malt liquor, or combinations thereof, and mixed liquor, a part of which is fermented, spirituous, vinous, or malt liquor or otherwise intoxicating, and every liquor or solid or semisolid or other substance, patented or not, containing alcohol, spirits, wine, or beer.

B. ''Package'' means any container or receptacle used for holding liquor.

C. ''Person'' means any individual, business, or other legal entity.

D. ''Pueblo'' means the Pueblo of Nambé, a federally recognized Tribe of Indians.

E. ''Reservation'' means all lands within the exterior boundaries of the Pueblo of Nambé, including rights-of-way, lands owned by or for the benefit of the Pueblo, tribally purchased lands, and lands that may be leased by the Pueblo of Nambé.

F. ''Sale'' includes the exchange, barter, traffic, donation, selling, supplying, or distribution of liquor.

G. ''Tribal Council'' means the Pueblo of Nambé Tribal Council.

3. *State Law.* Unless otherwise provided in this Ordinance, standards for the sale and transaction of liquor shall be in conformity with the laws of the State of New Mexico, as required by, and in accordance with § 18 U.S.C. 1161.

4. *Sale and Possession.*

A. *Sales Limited.* Sales of liquor are allowed on the following lands:

i. Pueblo lands as assigned to the Pueblo of Nambé Gaming Enterprise by the Tribal Council.

ii. Pueblo lands assigned to the Nambé Pueblo Development Corporation by the Tribal Council.

iii. Other lands, individuals and entities only as permitted by Tribal Council Resolution.

B. *Sales for Personal Use; Resale Prohibited.* All sales allowed by this Ordinance shall be personal use of the individual purchaser. Such sales for personal use must be in package form or by the drink. Resale of any liquor is prohibited and violators shall be in violation of this Ordinance and subject to penalties.

C. *Limited to Adults.* All handling, stocking, possession, and sale of liquor shall be made by persons twenty-one (21) years of age or older. Proof of age must be shown by a current and valid state driver's license or other government issued identification that contains birth date and photo of the holder of the license or identification.

D. *Right to Refuse Sale.* Any person authorized to sell liquor within the Pueblo shall have the authority to refuse to sell liquor to any person unable to produce proof of age and identity.

E. *Liability Insurance.* Any person authorized to sell liquor within the Pueblo shall obtain general liability insurance in the amount not less than $1,000,000 (one million dollars) per occurrence.

F. *Tribal-State Compact.* Any person authorized to dispense, sell, serve or deliver alcohol within a gaming establishment shall conform to all alcohol provisions contained in the current Tribal-State Gaming Compact.

5. *Tribal License.*

A. *Tribal Council Authorization.* Any person may be authorized to engage in the wholesale purchase, sale, or distribution of liquor within Pueblo Reservation boundaries upon terms and conditions approved by Tribal Council Resolution. Any person granted such approval by Tribal Council Resolution will be deemed to have a Pueblo of Nambé liquor license.

B. *License Revocation.* Tribal Council has the authority to revoke a Tribal liquor license for any violations arising from this Ordinance or other Pueblo Law and Order Code violations.

6. *Offenses.* Any person who violates this Ordinance is subject to a civil penalty, at a minimum. Offenses include, but are not limited to, the following:

A. *Sales to Minors.* No sale of liquor shall be made to any person under the age of twenty-one (21).

B. *Purchase by Minors.* Any person under the age of twenty-one (21) who purchases, attempts to purchase, or possesses any liquor shall be in the violation of this Ordinance.

C. *Unauthorized Sale.* It shall be a violation of this ordinance for any person within the boundaries of the Pueblo Reservation to:

i. Buy liquor from any person other than those properly authorized by Tribal Council Resolution and in compliance with this Ordinance, or

ii. Sell alcohol outside the portion of the Pueblo Reservation authorized for sale by that license.

D. *Intoxicated Persons.* It shall be a violation of this ordinance for any person to sell liquor to an intoxicated person.

E. Other violations of this Ordinance.

7. *Penalties.*

A. *Civil Penalty.* Any person, business, or other legal entity purchasing, possessing, selling, delivering, bartering, or manufacturing liquor products in violation of any part of this Ordinance, or of any rule or regulation adopted pursuant to this Ordinance, shall be subject to a civil assessment of not more than one thousand dollars ($1000) for each violation.

B. *Criminal Penalty.* In addition to civil penalties, a person, business, or other legal entity may be subject to criminal prosecution by the Pueblo for the purchasing, possessing, selling, delivering, bartering, or manufacturing liquor products in violation of any part of this Ordinance, or of any rule or

regulation adopted pursuant to this Ordinance.

C. *Contraband.* All contraband merchandise shall be confiscated by the Pueblo and disposed of as directed by the Tribal Council.

8. *Sovereign Immunity Reserved.* Nothing in this Ordinance shall be construed as a waiver of sovereign immunity or rights of the Pueblo.

9. *Amendments.* This Ordinance may be amended by the Tribal Council, subject to approval by the Secretary of the Interior or the Secretary's designee.

10. *Effective Date.* This Ordinance shall be in effect upon the date of publication in the **Federal Register** by the Secretary of the Interior or the Secretary's designee.

[FR Doc. E6–1395 Filed 2–1–06; 8:45 am]

BILLING CODE 4310–4J–P

DEPARTMENT OF THE INTERIOR

Bureau of Land Management

[WO–310–1310–01–PB–24 1A; OMB Control Number 1004–0034]

Information Collection Submitted to the Office of Management and Budget Under the Paperwork Reduction Act

The Bureau of Land Management (BLM) has submitted the proposed collection of information listed below to the Office of Management and Budget for approval under the provisions of the Paperwork Reduction Act (44 U.S.C. 3501 *et seq.*). On April 6, 2005, BLM published a notice in the **Federal Register** (70 FR 17462) requesting comments on the collection. The comment period closed on June 6, 2005. BLM received no comments. You may obtain copies of the proposed collection of information and related explanatory material by contacting the BLM Information Collection Clearance Officer at the telephone number listed below.

OMB is required to respond to this request within 60 days but may respond after 30 days. For maximum consideration, your comments and suggestions on the requirements should be directed within 30 days to the Office of Management and Budget, Interior Department Desk Officer (1004–0034), at OMB–OIRA via facsimile to (202) 395–6566 or e-mail to *OIRA_DOCKET@omb.eop.gov.* Please provide a copy of your comments to the BLM Information Collection Clearance Officer (WO–630) Bureau of Land Management, Eastern States Office, 7450 Boston Blvd., Springfield, Virginia 22153.

Nature of Comments: We specifically request your comments on the following:

1. Whether the collection of information is necessary for the proper functioning of the agency, including whether the information will have practical utility;

2. The accuracy of our estimates of the information collection burden, including the validity of the methodology and assumptions we use;

3. Ways to enhance the quality, utility, and clarity of the information collected; and

4. Ways to minimize the information collection burden on those who are to respond, including the use of appropriate automated, electronic, mechanical, or other technological collection techniques or other forms of information technology.

Title: Oil and Gas Lease Transfers by Assignment of Record Title or Operating Rights (Sublease) 43 CFR 3106, 3135, 3216).

OMB Approval Number: 1004–0034.

Abstract: Respondents supply information on these forms (3000–3 and 3000–3a) to assign/transfer an interest in an oil and gas or geothermal lease.

Form Numbers: 3000–3 and 3000–3a.

Frequency: On occasion.

Description of Respondents: Individuals, small businesses, large corporations.

Estimated Completion Time: 30 minutes for each form.

Annual Responses: 60,000.

Filing Fee Per Response: $25 for oil and gas and $50 for geothermal.

Annual Burden Hours: 30,000.

Bureau Clearance Officer: Ian Senio, (202) 452–5033.

Dated: December 30, 2005.

Ian Senio,

Bureau of Land Management, Information Collection Clearance Officer.

[FR Doc. 06–940 Filed 2–1–06; 8:45 am]

BILLING CODE 4310–84–M

DEPARTMENT OF THE INTERIOR

National Park Service

Native American Graves Protection and Repatriation Review Committee: Meeting

AGENCY: National Park Service, Interior.

ACTION: Notice.

SUMMARY: This is notice of a meeting of the Native American Graves Protection and Repatriation Review Committee. The next Review Committee meeting is a public teleconference on March 3, 2006, to consider the disposition of culturally unidentifiable human remains; discuss the agenda for the Review Committee meeting tentatively scheduled for May 30–31, 2006, in Juneau, AK; review the Review Committee's meeting, findings, and dispute procedures; and receive presentations and statements by Indian tribes, Native Hawaiian organizations, museums, Federal agencies, and the public.

DATES: The meeting via teleconference is on March 3, 2006, from 2 p.m. until approximately 4 p.m. e.s.t.

FOR FURTHER INFORMATION CONTACT: Designated Federal Officer, Native American Graves Protection and Repatriation Review Committee, telephone (202) 354–2206, facsimile (202) 371–5197, e-mail timmckeown@nps.gov.

SUPPLEMENTARY INFORMATION: Authority. Native American Graves Protection and Repatriation Act (NAGPRA, 25 U.S.C. 3001 *et seq.*), and Federal Advisory Committee Act (FACA, 5 U.S.C. Appendix).

General Information. The Review Committee was established by NAGPRA. Review Committee members are appointed by the Secretary of the Interior. The Review Committee is responsible for monitoring the NAGPRA inventory and identification process; reviewing and making findings related to the identity or cultural affiliation of cultural items, or the return of such items; facilitating the resolution of disputes; compiling an inventory of culturally unidentifiable human remains and recommending actions for developing a process for disposition of such remains; consulting with Indian tribes and Native Hawaiian organizations and museums on matters within the scope of the work of the Review Committee affecting such tribes or organizations; consulting with the Secretary of the Interior in the development of regulations to carry out NAGPRA; and making recommendations regarding future care of repatriated cultural items. The Review Committee's work is completed during meetings that are open to the public.

Transcripts of Review Committee meetings are available approximately 8 weeks after each meeting at the National NAGPRA program office, 1201 Eye Street NW, Washington, DC. To request electronic copies of meeting transcripts, send an e-mail message to nagpra_info@nps.gov. Information about NAGPRA, the Review Committee, and Review Committee meetings is available at the National NAGPRA Web site, http://www.cr.nps.gov/nagpra; for the Review Committee's meeting protocol, select ''Review Committee,'' then select ''Procedures.''

Meeting time and remote locations. The teleconference meeting will begin at

2 p.m. and end at approximately 4 p.m. e.s.t. Remote locations for public participation in the teleconference have been established at the following National Park Service offices. Participants should call ahead to ensure access, bring proper identification, and allow extra time to pass through security at each location.

Washington, DC: Headquarters Office, 1201 Eye Street NW, 7th floor, room 701. From 2 p.m. to 4 p.m. e.s.t. Contact Robin Coates, (202) 354–2201.

Boston, MA: Northeast Regional Office, 15 State Street, 4th floor conference room. Enter through the Visitors Center for Boston National Historical Park. From 2 p.m. to 4 p.m. e.s.t. Contact Chuck Smythe, (617) 223–5014.

Atlanta, GA: Southeast Regional Office, 100 Alabama Street SW, 1924 Building, 6th floor training room. From 2 p.m. to 4 p.m. e.s.t. Contact J. Anthony Paredes, (404) 562–3117, extension 638.

Omaha, NE: Midwest Regional Office, 601 Riverfront Drive, 2nd floor east conference room. From 1 p.m. to 3 p.m. c.s.t. Contact Michelle Watson, (402) 661–1952.

St. Paul, MN: Mississippi National River and Recreation Area, 111 East Kellogg Blvd, room 212. From 1 p.m. to 3 p.m. c.s.t. Contact Michael J. Evans, (651) 221–1028.

Denver, CO: Intermountain Regional Office, 12795 West Alameda Parkway. From noon to 2 p.m. m.s.t. Contact Dave Ruppert, (303) 969–2879.

Santa Fe, New Mexico: Intermountain Regional Office - Santa Fe, 1100 Old Santa Fe Trail, Herbert Maier Conference Room. From 12 noon to 2 p.m. m.s.t. Contact Ed Lee Natay, (505) 988–6896.

Tucson, AZ: Western Archeological and Conservation Center, 255 North Commerce Park Loop. From noon to 2 p.m m.s.t. Contact Barbara Herman Reese, (520) 670–6501 extension 221

Oakland, CA: Pacific West Regional Office, 111 Jackson Street, 6th floor conference room. From 11 a.m. to 1 p.m. P.s.t. Contact Mark Rudo, (510) 817–1405.

Seattle, WA: Pacific West Regional Office, 909 First Avenue, room 560. From 11 a.m. to 1 p.m. P.s.t. Contact Fred York, (206) 220–4148.

Anchorage, AK: Alaska Regional Office, 240 West 5th Avenue, room 409. From 10 a.m. to noon Ak.s.t. Contact Eileen Divinney, (907) 644–3623.

Honolulu, HI: Pacific Island Support Office, PJKK Federal Building, 300 Ala Moana Boulevard, room 3–127. From 9 a.m. to 11 a.m. Ha.s.t. Contact Melia Lane-Kamahele, (808) 541–2693, extension 729.

Agenda for the teleconference meeting. The agenda for the March 3, 2006 teleconference includes the disposition of culturally unidentifiable human remains; discussion of the agenda for the Review Committee meeting tentatively scheduled for May 30–31, 2006, in Juneau, AK; review of the Review Committee's meeting, findings, and dispute procedures; and presentations and statements by Indian tribes, Native Hawaiian organizations, museums, Federal agencies, and the public. Persons may submit written statements for the Review Committee's consideration to the Designated Federal Officer, facsimile (202) 371–5197, e-mail tim__mckeown@nps.gov.

Dated: January 20, 2006.

C. Timothy McKeown,

Designated Federal Officer, Native American Graves Protection and Repatriation Review Committee.

[FR Doc. E6–1376 Filed 2–1–06; 8:45 am]

BILLING CODE 4312–50–S

DEPARTMENT OF THE INTERIOR

National Park Service

Notice of Intent to Repatriate Cultural Items: Denver Museum of Nature & Science, Denver, CO

AGENCY: National Park Service, Interior.

ACTION: Notice.

Notice is here given in accordance with the Native American Graves Protection and Repatriation Act (NAGPRA), 25 U.S.C. 3005, of the intent to repatriate cultural items in the possession of the Denver Museum of Nature & Science, Denver, CO, that meet the definition of ''sacred objects'' under 25 U.S.C. 3001.

This notice is published as part of the National Park Service's administrative responsibilities under NAGPRA, 25 U.S.C. 3003 (d)(3). The determinations in this notice are the sole responsibility of the museum, institution, or Federal agency that has control of the cultural items. The National Park Service in not responsible for the determinations in this notice.

Museum accession, catalogue, and computer records, as well as consultation with representatives of the Bois Forte Band (Nett Lake) of the Minnesota Chippewa Tribe, Minnesota, indicate that the nine cultural objects are Chippewa and are from the Nett Lake Reservation, MN.

In 1961, Mrs. Sidney A. Petersen purchased eight cultural items from the estate of Jack Chicag of Nett Lake Reservation, MN. The cultural items are sacred objects derived from the Midewiwin Society, also known as the Medicine Lodge Society. The eight cultural items are 1 Midewiwin initiation set consisting of 16 items, including cedar wood pieces and a medicine packet, all placed in a cloth tobacco sack; 6 medicine bags consisting of various animal skins with added cloth, ribbon, or beadwork; and 1 incomplete Midewiwin scroll. In 1961, Mrs. Petersen also purchased from Mrs. Ray Drift of Nett Lake Reservation, MN, one wooden crook handle Midewiwin staff with clusters of ribbons, feathers, metal jingles, brass thimbles, and carved deer claws. On February 5, 1976, Mrs. Petersen sold the nine cultural items to the Crane Foundation. On February 19, 1976, the Crane Foundation, through Dr. and Mrs. Frances Crane, gifted the nine cultural items to the Denver Museum of Natural History (now Denver Museum of Nature & Science).

The nine cultural items are needed by Midewiwin Society priests to conduct ceremonials and are needed by Bois Forte Band (Nett Lake) of the Minnesota Chippewa, Minnesota religious leaders for the practice of traditional Native American religious ceremonies.

Officials of the Denver Museum of Nature & Science have determined that, pursuant to 25 U.S.C. 3001 (3)(C), the nine Midewiwin cultural items described above are specific ceremonial objects needed by traditional Native American religious leaders for the practice of traditional Native American religions by their present-day adherents. Officials of the Denver Museum of Nature & Science also have determined that, pursuant to 25 U.S.C. 3001 (2), there is a relationship of shared group identity that can be reasonably traced between the nine cultural items and the Bois Fort Band (Nett Lake) of the Minnesota Chippewa, Minnesota.

Representatives of any other Indian tribe that believes itself to be culturally affiliated with the nine cultural items should contact Dr. Steven Holen, Head of the Anthropology Department, Denver Museum of Nature & Science, 2001 Colorado Blvd., Denver, CO 80205, telephone (303) 370–8261, before March 6, 2006. Repatriation of the cultural items to the Bois Fort Band (Nett Lake) of the Minnesota Chippewa, Minnesota may proceed after that date if no additional claimants come forward.

The Denver Museum of Nature & Science is responsible for notifying the Bois Fort Band (Nett Lake) of the Minnesota Chippewa, Minnesota that this notice has been published.

Dated: January 25, 2006.

C. Timothy McKeown,

Acting Manager, National NAGPRA Program.

[FR Doc. E6–1381 Filed 2–1–06; 8:45 am]

BILLING CODE 4312–50–S

DEPARTMENT OF THE INTERIOR

National Park Service

Notice of Intent to Repatriate Cultural Items: Horner Collection, Oregon State University, Corvallis, OR

AGENCY: National Park Service, Interior.

ACTION: Notice.

Notice is here given in accordance with the Native American Graves Protection and Repatriation Act (NAGPRA), 25 U.S.C. 3005, of the intent to repatriate cultural items in the possession of the Horner Collection, Oregon State University, Corvallis, OR, that meet the definition of ''unassociated funerary objects'' under 25 U.S.C. 3001.

This notice is published as part of the National Park Service's administrative responsibilities under NAGPRA, 25 U.S.C. 3003 (d)(3). The determinations in this notice are the sole responsibility of the museum, institution, or Federal agency that has control of the cultural items. The National Park Service is not responsible for the determinations in this notice.

The Horner Collection, Oregon State University professional staff consulted with representatives of the Confederated Tribes of the Warm Springs Reservation of Oregon. The Confederated Tribes and Bands of the Yakama Indian Nation, Washington, were advised of the cultural items, but did not participate in consultation.

In 1936, Mr. Keith Chamberlain loaned two antelope spikes to the John B. Horner Museum of the Oregon Country, Oregon Agricultural College. The Oregon Agricultural College was renamed the Oregon State College in 1937, and became Oregon State University in 1962. In 1974, Mr. Chamberlain donated the two antelope spikes to the Horner Museum. Currently, cultural items from the Horner Museum are referred to as the Horner Collection, which is owned by, and in the possession of, Oregon State University. At that time, Mr. Chamberlain also donated an additional 36 cultural items to the Horner Collection. The cultural items are 14 bead necklaces, 3 mortars, 1 pestle, 2 gaming sticks, 1 bow, 2 bone whistles, 1 axe head, 1 small bowl, 1 flintlock and bead, 1 unknown lithic, 1 stone pendant, 2 sets of miscellaneous beads, 1 blue and white ceramic pendant, 1 horn jar, 1 copper pendant, 1 set of brass buttons, 1 metal pendant, and 1 set of loose copper beads.

The cultural items were noted as being from ''Memaloose Island, Columbia River.'' It is unknown if they were from Lower Memaloose Island, Wasco County, OR, or Upper Memaloose Island, Klickitat County, WA. It is unknown if they were found by Mr. Chamberlain. The Memaloose Islands were used during the postcontact period by local Native American peoples for the burial of their dead. The Memaloose Islands are within the traditional territory of Chinook- and Sahaptin-speaking Indian groups represented today by the Confederated Tribes and Bands of the Yakama Nation, Washington and the Confederated Tribes of the Warm Springs Reservation of Oregon. The Confederated Tribes of the Warm Springs Reservation of Oregon has submitted a claim for the unassociated funerary objects.

Officials of the Horner Collection, Oregon State University have determined that, pursuant to 25 U.S.C. 3001 (3)(B), the 38 cultural items described above are reasonably believed to have been placed with or near individual human remains at the time of death or later as part of the death rite or ceremony and are believed, by a preponderance of the evidence, to have been removed from a specific burial site of a Native American individual. Officials of the Horner Collection, Oregon State University also have determined that, pursuant to 25 U.S.C. 3001 (2), there is a relationship of shared group identity that can be reasonably traced between the 38 unassociated funerary objects and the Confederated Tribes and Bands of the Yakama Nation, Washington, and Confederated Tribes of the Warm Springs Reservation of Oregon.

Representatives of any other Indian tribe that believes itself to be culturally affiliated with the unassociated funerary objects should contact Sabah Randhawa, Executive Vice President and Provost, President's Office, Oregon State University, 600 Kerr Administration Building, Corvallis, OR 97331, telephone (541) 737–8260, before March 6, 2006. Repatriation of the 38 unassociated funerary objects to the Confederated Tribes of the Warm Springs Reservation of Oregon may proceed after that date if no additional claimants come forward.

The Horner Collection, Oregon State University is responsible for notifying the Confederated Tribes and Bands of the Yakama Nation, Washington and Confederated Tribes of the Warm Springs Reservation of Oregon and that this notice has been published.

Dated: January 20, 2006.

C. Timothy McKeown,

Acting Manager, National NAGPRA Program.

[FR Doc. E6–1379 Filed 2–1–06; 8:45 am]

BILLING CODE 4312–50–S

DEPARTMENT OF THE INTERIOR

National Park Service

Notice of Inventory Completion: Horner Collection, Oregon State University, Corvallis, OR

AGENCY: National Park Service, Interior.

ACTION: Notice.

Notice is here given in accordance with the Native American Graves Protection and Repatriation Act (NAGPRA), 25 U.S.C. 3003, of the completion of an inventory of human remains in the possession of the Horner Collection, Oregon State University, Corvallis, OR. The human remains were removed from an island in the Columbia River, near the border between Oregon and Washington.

This notice is published as part of the National Park Service's administrative responsibilities under NAGPRA, 25 U.S.C. 3003 (d)(3). The determinations in this notice are the sole responsibility of the museum, institution, or Federal agency that has control of the Native American human remains. The National Park Service is not responsible for the determinations in this notice.

A detailed assessment of the human remains was made by Horner Collection, Oregon State University professional staff in consultation with representatives of the Confederated Tribes of the Warm Springs Reservation of Oregon. The Confederated Tribes and Bands of the Yakama Indian Nation, Washington, were advised of the human remains, but did not participate in consultation.

Some time between 1925 and 1927, human remains representing a minimum of one individual was removed from ''Memaloose Island, Columbia River.'' It is unclear from museum records whether the human remains came from Upper Memaloose Island, Klickatat County, WA, or Lower Memaloose Island, Wasco County, OR. On June 16, 1936, Keith Chamberlain loaned one cranium (skull without the lower jaw), to the John B. Horner Museum of the Oregon Country, Oregon Agricultural College. The Oregon Agricultural College was renamed the Oregon State College in 1937, and

became Oregon State University in 1962. In 1975, Keith Chamberlain gifted the cranium to the John B. Horner Museum of the Oregon Country. The Horner Museum closed in 1995. Currently, cultural items from the Horner Museum are referred to as the Horner Collection, which is owned by, and in the possession of, Oregon State University. It is unknown whether the human remains were removed by Mr. Chamberlain. No known individuals were identified. No associated funerary objects are present.

The human remains have been identified as Native American based on the presence of cranial deformation and museum records that identify the human remains as a ''flathead skull'', cranial deformation is consistent with practices of the Chinook-speaking groups and, to a lesser degree, by the Sahaptin-speaking groups. The Memaloose Islands were used during the post-contact period by local Native American peoples for the burial of their dead. The Memaloose Islands are within the traditional territory of Chinook- and Sahaptin-speaking Indian groups represented today by the Confederated Tribes and Bands of the Yakama Indian Nation, Washington, and the Confederated Tribes of the Warm Springs Reservation of Oregon. The Confederated Tribes of the Warm Springs Reservation of Oregon has submitted a claim for the human remains.

Officials of the Horner Collection, Oregon State University have determined that, pursuant to 25 U.S.C. 3001 (9–10), the human remains described above represent the physical remains of one individual of Native American ancestry. Officials of the Horner Collection, Oregon State University have also determined that, pursuant to 25 U.S.C. 3001 (2), there is a relationship of shared group identity that can be reasonably traced between the Native American human remains and the Confederated Tribes and Bands of the Yakama Indian Nation, Washington, and Confederated Tribes of the Warm Springs Reservation of Oregon.

Representatives of any other Indian tribe that believes itself to be culturally affiliated with the human remains should contact Sabah Randhawa, Executive Vice President and Provost, President's Office, Oregon State University, 600 Kerr Administration Building, Corvallis, OR 97331, telephone (541) 737–8260, before March 6, 2006. Repatriation of the human remains to the Confederated Tribes of the Warm Springs Reservation of Oregon may proceed after that date if no additional claimants come forward.

The Horner Collection, Oregon State University is responsible for notifying the Confederated Tribes and Bands of the Yakama Nation, Washington, and Confederated Tribes of the Warm Springs Reservation of Oregon that this notice has been published.

Dated: January 20, 2006.

C. Timothy McKeown,

Acting Manager, National NAGPRA Program.

[FR Doc. E6–1380 Filed 2–1–06; 8:45 am]

BILLING CODE 4312–50–S

DEPARTMENT OF THE INTERIOR

National Park Service

Notice of Inventory Completion: Renton Historical Society and Museum, Renton, WA

AGENCY: National Park Service, Interior.

ACTION: Notice.

Notice is here given in accordance with the Native American Graves Protection and Repatriation Act (NAGPRA), 25 U.S.C. 3003, of the completion of an inventory of human remains in the control of the Renton Historical Society and Museum, Renton, WA. The human remains were removed from King County, WA.

This notice is published as part of the National Park Service's administrative responsibilities under NAGPRA, 25 U.S.C. 3003 (d)(3). The determinations in this notice are the sole responsibility of the museum, institution, or Federal agency that has control of the human remains. The National Park Service is not responsible for the determinations in this notice.

A detailed assessment of the human remains was made by Renton Historical Society and Museum professional staff in consultations with representatives of the Muckleshoot Indian Tribe of the Muckleshoot Reservation, Washington.

In the early 1900s, human remains representing a minimum of one individual were removed from an unknown site on the beach of southern Lake Washington, Renton, King County, WA, by Carl Mattison, a local resident. In 1978, the human remains were donated to the Renton Historical Society and Museum by Marilyn Calcaterra and Judith Matson. No known individual was identified. No associated funerary objects are present.

Based on a cursory physical examination of the human remains and general knowledge of indigenous habitation of the Lake Washington area prior to colonization by Europeans, the human remains are presumed to comprise the partial skeleton of an individual of Native American ancestry. According to museum records, the donor speculated that a mass burial site, similar to those used by Native Americans, was within the general area where the human remains were unearthed. Moreover, Native Americans have been known to populate the area surrounding Lake Washington since before contact. Descendants of the original inhabitants are members of the Muckleshoot Indian Tribe of the Muckleshoot Reservation, Washington, and the Lake Washington area is within their aboriginal territory.

Officials of the Renton Historical Society and Museum have determined that, pursuant to 25 U.S.C. 3001 (9–10), the human remains described above represent the physical remains of one individual of Native American ancestry. Officials of the Renton Historical Society and Museum also have determined that, pursuant to 25 U.S.C. 3001 (2), there is a relationship of shared group identity that can be reasonably traced between the Native American human remains and the Muckleshoot Indian Tribe of the Muckleshoot Reservation, Washington.

Representatives of any other Indian tribe that believes itself to be culturally affiliated with the human remains should contact Laura Crawford, Acting Collections Manager, Renton Historical Museum, 235 Mill Avenue South, Renton, WA 98055, telephone (425) 255–2330, before March 6, 2006. Repatriation of the human remains to the Muckleshoot Indian Tribe of the Muckleshoot Reservation, Washington may proceed after that date if no additional claimants come forward.

The Renton Historical Society and Museum is responsible for notifying the Muckleshoot Indian Tribe of the Muckleshoot Reservation, Washington that this notice has been published.

Dated: January 20, 2006.

C. Timothy McKeown,

Acting Manager, National NAGPRA Program.

[FR Doc. E6–1378 Filed 2–1–06; 8:45 am]

BILLING CODE 4312–50–S

DEPARTMENT OF THE INTERIOR

Bureau of Reclamation

Agency Information Collection Activities; Proposed Revisions to a Currently Approved Information Collection; Request for Comments

AGENCY: Bureau of Reclamation, Interior.

ACTION: Notice of revisions to a currently approved information collection form (OMB No. 1006–0003).

SUMMARY: In accordance with the Paperwork Reduction Act of 1995 (44 U.S.C. 3501 *et seq.*), this notice announces that the following Information Collection Request (ICR) has been forwarded to the Office of Management and Budget (OMB) for review and comment: The previously-approved Right-of-Use (ROU) Application (Form 7–2540), 43 CFR part 429, OMB Control Number 1006–0003, has been significantly modified, shortened and made clearer for short-term public uses of Reclamation land, facilities, and water surfaces. The ICR describes the nature of the information collection and its expected cost and burden.

DATES: All written comments must be received on or before March 6, 2006.

ADDRESSES: You may send comments regarding the burden estimate, or any other aspect of the information collection, including suggestions for reducing the burden, to the Desk Officer for the Department of the Interior at the Office of Management and Budget, Office of Information and Regulatory Affairs, via facsimile to (202) 395–6566, or e-mail to *OIRA_DOCKET@omb.eop.gov.* A copy of your comments should also be directed to the Bureau of Reclamation, Attention: D–5300, P.O. Box 25007, Denver, CO 80225–0007.

FOR FURTHER INFORMATION CONTACT: For further information or a copy of the proposed ROU Application Form 7–7540 contact Marian Mather, D–5300, P.O. Box 25007, Denver, CO 80225–0007; or by telephone: (303) 445–2895.

SUPPLEMENTARY INFORMATION: In response to public comments to the **Federal Register** (FR) notice 70 FR 43181 (July 26, 2005) relating to the complexity of the currently-approved ROU application form, Reclamation has significantly modified, shortened, and made clearer the ROU Application Form 7–2540 to address short-term public requests to use Reclamation land, facilities, and water surfaces. The public comments were instructive to Reclamation by pointing out that, for example, the types of information needed from a boating regatta organizer would differ significantly from that needed from a construction company requesting a right-of-way for placement of a fiber optics cable. In the latter case, Reclamation will begin using the Standard Form 299 (SF 299), Application for Transportation and Utility Systems and Facilities on Federal Lands. The SF 299 requires more in-depth information from those individuals requesting approval to place and construct such infrastructure as transmission lines, telecommunications towers, or natural gas pipelines, or for other long-term uses such as grazing and farming. The use of this form is in compliance with the Presidential Memorandum, subject: Improving Rights of-Way Management Across Federal Lands to Spur Broadband Deployment, dated March 26, 2004. Requesting the more detailed information from an organizer of a short-term event would be inappropriate and not be useful to Reclamation in determining whether to grant the request. Thus the decision was made, after publishing of the July 2005 FR notice relating to the renewal of a single ROU form, to significantly modify the Form 7–2540 so that appropriate information was requested from short-term ROU applicants.

Title: Bureau of Reclamation Right-of-Use Application, 43 CFR 429.

Abstract: Reclamation is responsible for approximately 8 million acres of land which directly support Reclamation's Federal water projects in the 17 western states. Individuals or entities wanting to use Reclamation's lands, facilities, and water surfaces must submit an application to gain permission for such uses based on the type of use for either long-term or short-term activities. Examples of short-term activities are recreation and sporting events, and commercial filming and photography. Reclamation will review and evaluate these ROU applications and determine whether the granting of the requested use is compatible with Reclamation's present or future uses of the water and related project lands, facilities, or water surfaces.

Frequency: Each time a short-term right-of-use is requested.

Respondents: Individuals, corporations, companies, and State and local entities that want to use Reclamation lands, facilities, or water surfaces.

Estimated Annual Total Number of Respondents: 175.

Estimated Number of Responses per Respondent: 1.0.

Estimated Total Number of Annual Responses: 175.

Estimated Total Annual Burden on Respondents: 350 hours.

Estimated Completion Time Per Respondent: 2 hours.

Non-hour Cost Burden: Processing fee of $200 per ROU Application.

Public Comments: Notice was given in the **Federal Register** on July 26, 2005 (70 FR 43181, July 26, 2005) to solicit public comments on Form 7–2540, which was reworked in preparation for public comment. Four individuals commented on this form and all comments were from an organized recreation activity perspective from the area of the New Melones Reservoir in Reclamation's Central Valley Project. The following are the paraphrased public comments and Reclamation's responses:

Comment 1: All individuals who commented were specifically critical of charging a $200 application fee claiming that the application fee is ''outrageous and not economically feasible'' and will force special events to take their activities elsewhere. Also, there were three comments which stated, in effect, that there is no ''set rate'' for the charging of (rental) fees and it appears as if Reclamation can [arbitrarily] determine such charges.

Response: It is important to understand that the application fee and the value of the right of use (*i.e.*, rental fee) are not established by this form. This form only states what fees are required according to the existing 1983 regulation, 43 CFR part 429, specifically § 429.6(b) for the application fee (referred to as initial deposit fee) and section 429.6(f) for rental charges. The application fee must equal Reclamation's costs of administering the resultant ROU authorizations, as required by 31 U.S.C. 9701 and OMB Circular A–25. As with any applicable regulation, Reclamation does not have the latitude to arbitrarily waive the application fee as it is required by this regulation.

Comment 2: The form is complicated, lengthy, and difficult to fill out and understand.

Response: Reclamation agrees that the form was too difficult, lengthy, and complicated for short-term recreational uses envisioned by the commenters. This comment became the impetus behind Reclamation's decision to completely revise the ROU form referenced in the FR Notice. The reason for the complete revision was that the Form 7–2540 cited in the FR Notice was really geared more for longer term uses, such as broadband deployment activities, pipeline placement and construction, and grazing or farming leases. In addition, Reclamation became aware of the recent requirement for all bureaus to use the SF 299 instead of other forms for such activities. Thus, the issue of what form should be used to collect information for long term uses was resolved with the decision to use the SF 299.

As a result of the public comments, Reclamation's Form 7–2540 was revised to target shorter term uses such as special recreation events, organized gatherings for special events, sporting events, and commercial filming. The resulting proposed short-term ROU Application Form 7–2540 is a significantly simpler, one-page form with an additional page of instructions, which should provide ease of understanding and facilitate completion for individuals requesting such uses of Reclamation's lands, facilities, and water surfaces.

Comment 3: Two hours to complete the form is unacceptable.

Response: Trying to keep both short- and long-term uses under Reclamation's previously approved Form 7–2540 caused confusion and Reclamation agrees with the commenters that it did make the form appear more onerous and lengthy to fill out. To facilitate completion of the revised ROU Application Form 7–2540 for short-term uses, it will be made available on the Internet where it can be downloaded and filled out on a personal computer or printed out for manual completion. The hours spent by the applicants to complete the application should not exceed 2 hours on average, depending upon the type of backup materials needed.

Comment 4: Fishing tournaments and boat regattas are not in the same category as construction of transmission lines.

Response: Reclamation agrees with this comment. In response, Reclamation has completely revised the previous Form 7–2540 to meet the needs of short-term users, such as those requesting permission to hold special events, like fishing tournaments and boating regattas.

Comment 5: There is no set size of event which triggers the use of the application.

Response: The size of the event does not matter as to whether a ROU Application Form 7–2540 is required. Section 43 CFR 429.6 requires that ''The applicant for a right-of-use over land or estate in land, in the custody and control of Reclamation, must make application to the * * * affected [Reclamation] field office. * * *'' In contrast, the ROU Application Form 7–2540 does not need to be completed for day-to-day individual use of Reclamation's land, facilities, or water surfaces as long as those uses do not exclusively limit other users from enjoying the same area and do not interfere with or threaten project operations.

Comment 6: There is no time limit for returning any remaining deposit of application fee.

Response: The comment is a reasonable concern. The new, proposed ROU Application Form 7–2540 has now been modified to include a statement that a refund of any unused initial deposit fee will be completed within 30 days, provided that proper banking information for electronic funds transfer has been provided in a timely manner so as to facilitate such refund. Should their ROU request be denied, contact will be made with the applicant to gather banking information necessary to process their refund. Upon receipt of this information, the refund of any unused initial deposit fee will then be completed within 30 days.

Comment 7: One individual commented that Reclamation may ask for a ''deposit fee of $200, and then says it may refund a part of that, or ask for more, after they decide how much the value of the right-of-use is, *based on an appraisal.*'' (emphasis added)

Response: As discussed in detail in Reclamation's responses to comment 1 above, there are two fees or charges associated with an approved ROU Application Form 7–2540. Both the fee and rental charges are authorized and required by 43 CFR part 429. The first fee is referred to as an initial application fee (please refer to Reclamation's response to comment 6 above with regard to the conditions associated with a refund of an application fee). Reclamation may ask for additional monies for the initial application fee ONLY if the administrative costs of actually getting to the point of approving the application exceeds the initial $200 application fee. The commenter is incorrect to assume that asking the applicant for more money to cover Reclamation's administrative costs is ''based on an appraisal'' of the ROU; rather, it is based only on Reclamation's estimated costs of approving the applicant's request.

The second required charge is the cost to the applicant for the rental charge or value of the authorized ROU. This *rental charge is based on an appraisal* or other acceptable means of establishing the value of permitting the applicant to use Federal lands or water surfaces (see 43 CFR 429.3).

Comment 8: House Rule (H.R.) 4818 states that 80 percent of the use fees must be spent on much-needed improvements at a local level. We are concerned with how Reclamation will decide the fees, and who will make the decision.

Response: The renewal of the ROU application at issue here has nothing to do with H.R. 4818. The initial application fees cover Reclamation's costs of reviewing and granting the ROU. The monies collected from the rental charges are credited in accordance with existing Federal reclamation law and are statutorily not available for direct improvements at the local level. Again, these application fees and rental charges are authorized by an existing regulation 43 CFR part 429 and are independent of and not affected by H.R. 4818.

Comment 9: One comment requested a 90-day extension to solicit additional comments.

Response: This suggestion cannot be accommodated. However, the public is given an additional 30 days to respond to this second FR Notice. Individuals wishing to comment will direct their comments directly to the OMB at the address provided in this notice. Individuals should request a copy of the ROU Application Form 7–2540 from the Reclamation staff listed in this notice.

Public comments are invited on the modified ROU Application Form 7–2540 as to:

(a) Whether the proposed information collection is necessary for the proper performance of Reclamation's functions to manage and operate Federal water projects and their associated lands, facilities, and water surfaces, including whether the information will have practical use;

(b) The accuracy of the burden estimate for the proposed collection of information, including the validity of the methodology and assumptions used;

(c) Ways to enhance the quality, usefulness, and clarity of the information to be collected; and

(d) Ways to minimize the burden of the information collection on respondents, including the use of appropriate automated, electronic, mechanical, or other forms of information technology.

An agency may not conduct or sponsor, and a person is not required to respond to a collection of information unless it displays a currently valid OMB control number. Reclamation will display a valid OMB control number on the ROU Application Form 7–2540.

OMB has up to 60 days to approve or disapprove this information collection, but may respond after 30 days; therefore, public comment should be submitted to OMB within 30 days in order to assure maximum consideration.

Department of the Interior's practice is to make comments, including names and home addresses of respondents,

available for public review. Individual respondents may request that we withhold their home address from public disclosure, which we will honor to the extent allowable by law. There also may be circumstances in which we would withhold a respondent's identity from public disclosure, as allowable by law. If you wish us to withhold your name and/or address, you must state this prominently at the beginning of your comment. We will make all submissions from organizations or businesses, and from individuals identifying themselves as representatives or officials of organizations or businesses, available for public disclosure in their entirety.

Dated: January 25, 2006.

Roseann Gonzales,

Director, Office of Program and Policy Services, Denver Office.

[FR Doc. E6–1398 Filed 2–1–06; 8:45 am]

BILLING CODE 4310–MN–P

INTERNATIONAL TRADE COMMISSION

[Investigation No. NAFTA–103–13]

Woven Cotton Boxer Shorts: Probable Effect of Modification of NAFTA Rules of Origin for Goods of Canada and Mexico

AGENCY: United States International Trade Commission.

ACTION: Institution of investigation and request for written submissions.

DATES: *Effective Date:* January 27, 2006.

SUMMARY: Following receipt of a request on January 4, 2006 from the United States Trade Representative (USTR) under authority delegated by the President and pursuant to section 103 of the North American Free Trade Agreement (NAFTA) Implementation Act (19 U.S.C. 3313), the Commission instituted investigation No. NAFTA–103–13, Woven Cotton Boxer Shorts: Probable Effect of Modification of NAFTA Rules of Origin for Goods of Canada and Mexico.

FOR FURTHER INFORMATION CONTACT: Information may be obtained from Laura V. Rodriguez, Office of Industries (202–205–3499, *laura.rodriguez@usitc.gov*); for information on legal aspects, contact William Gearhart of the Office of the General Counsel (202–205–3091, *william.gearhart@usitc.gov*). The media should contact Margaret O'Laughlin, Office of Public Affairs (202–205–1819, *margaret.olaughlin@usitc.gov*).

Background: Annex 300–B, Chapter 4, and Annex 401 of the NAFTA contain the rules of origin for textiles and apparel for application of the tariff provisions of the NAFTA. These rules are set forth for the United States in general note 12 to the Harmonized Tariff Schedule (HTS). According to the USTR request letter, U.S. negotiators have recently reached agreement in principle with representatives of the Governments of Canada and Mexico to modify the NAFTA rule of origin for woven cotton boxer shorts classified in HTS subheading 6207.1000 and made from cotton woven fabrics of HTS subheadings 5210.1160, 5210.5160, 5210.4180, 5210.4160, 5210.5140, 5208.4240, 5208.4140, 5208.5230, and 5208.5140. These changes are the result of determinations that North American producers are not able to produce certain fabrics in commercial quantities in a timely manner. If implemented, the proposed rule of origin would apply to U.S. imports from and exports to the NAFTA parties. Section 202(q) of the North American Free Trade Agreement Implementation Act (the Act) authorizes the President, subject to the consultation and layover requirements of section 103 of the Act, to proclaim such modifications to the rules of origin as are necessary to implement an agreement with one or more of the NAFTA countries pursuant to paragraph 2 of section 7 of Annex 300–B of the Agreement. One of the requirements set out in section 103 of the Act is that the President obtain advice from the United States International Trade Commission.

In his letter, the USTR requested that the Commission provide advice on the probable effect of the proposed modification of the NAFTA rule of origin for woven cotton boxer shorts (as described above) on U.S. trade under the NAFTA, on total U.S. trade, and on domestic producers of the affected articles. As requested, the Commission will submit its advice to the USTR by April 3, 2006 and soon thereafter, issue a public version of the report with any confidential business information deleted. Additional information concerning the articles and the proposed modifications can be obtained by accessing the electronic version of this notice at the Commission Internet site (*http://www.usitc.gov*). The current NAFTA rules of origin applicable to U.S. imports can be found in general note 12 of the 2006 HTS (see ''General Notes'' link at *http://www.usitc.gov/tata/hts/bychapter/index.htm*).

Written Submissions: No public hearing is planned. However, interested parties are invited to submit written statements concerning the matters to be addressed by the Commission in this investigation. Submissions should be addressed to the Secretary, United States International Trade Commission, 500 E Street, SW., Washington, DC 20436. To be assured of consideration by the Commission, written statements related to the Commission's reports should be submitted to the Commission at the earliest practical date and should be received no later than the close of business on February 20, 2006. All written submissions must conform with the provisions of section 201.8 of the Commission's Rules of Practice and Procedure (19 CFR 201.8). Section 201.8 of the rules requires that a signed original (or copy designated as an original) and fourteen (14) copies of each document be filed. In the event that confidential treatment of the document is requested, at least four (4) additional copies must be filed, in which the confidential business information must be deleted (see the following paragraph for further information regarding confidential business information). The Commission's rules do not authorize filing submissions with the Secretary by facsimile or electronic means, except to the extent permitted by section 201.8 of the rules (see Handbook for Electronic Filing Procedures, *http://hotdocs.usitc.gov/pubs/handbook_on_electronic_filing.pdf*.

Any submissions that contain confidential business information (CBI) must also conform with the requirements of section 201.6 of the Commission's Rules of Practice and Procedure (19 CFR 201.6). Section 201.6 of the rules requires that the cover of the document and the individual pages be clearly marked as to whether they are the ''confidential'' or ''nonconfidential'' version, and that the CBI be clearly identified by means of brackets. All written submissions, except for CBI, will be made available in the Office of the Secretary to the Commission for inspection by interested parties.

The Commission may include some or all of the CBI it receives in the report it sends to the President. However, the Commission will not publish CBI in the public version of the report in a manner that would reveal the operations of the firm supplying the information. The public version will be made available to the public on the Commission's Internet site (*http://www.usitc.gov*).

The public record for this investigation may be viewed on the Commission's electronic docket (EDIS) *http://edis.usitc.gov*. Hearing impaired individuals may obtain information on this matter by contacting the Commission's TDD terminal on 202–205–1810. Persons with mobility impairments who will need special assistance in gaining access to the

Commission should contact the Office of the Secretary at 202–205–2000.

List of Subjects

NAFTA, Rules of origin, Fabrics, Boxer shorts.

Issued: January 27, 2006.

By order of the Commission.

Marilyn R. Abbott,

Secretary to the Commission.

[FR Doc. E6–1362 Filed 2–1–06; 8:45 am]

BILLING CODE 7020–02–P

INTERNATIONAL TRADE COMMISSION

[Investigation No. 731–TA–1102 (Preliminary)]

Activated Carbon From China

AGENCY: United States International Trade Commission.

ACTION: Institution of antidumping investigation and scheduling of a preliminary phase investigation.

SUMMARY: The Commission hereby gives notice of the institution of an investigation and commencement of preliminary phase antidumping investigation No. 731–TA–1102 (Preliminary) under section 733(a) of the Tariff Act of 1930 (19 U.S.C. 1673b(a)) (the Act) to determine whether there is a reasonable indication that an industry in the United States is materially injured or threatened with material injury, or the establishment of an industry in the United States is materially retarded, by reason of imports from China of activated carbon, provided for in subheading 3802.10.00 of the Harmonized Tariff Schedule of the United States, that are alleged to be sold in the United States at less than fair value. Unless the Department of Commerce extends the time for initiation pursuant to section 732(c)(1)(B) of the Act (19 U.S.C. 1673a(c)(1)(B)), the Commission must reach a preliminary determination in antidumping investigations in 45 days, or in this case by March 13, 2006. The Commission's views are due at Commerce within five business days thereafter, or by March 20, 2006.

For further information concerning the conduct of this investigation and rules of general application, consult the Commission's Rules of Practice and Procedure, part 201, subparts A through E (19 CFR part 201), and part 207, subparts A and B (19 CFR part 207).

EFFECTIVE DATE: January 26, 2006.

FOR FURTHER INFORMATION CONTACT: Jim McClure (202–205–3191), Office of Investigations, U.S. International Trade Commission, 500 E Street, SW., Washington, DC 20436. Hearing-impaired persons can obtain information on this matter by contacting the Commission's TDD terminal on 202–205–1810. Persons with mobility impairments who will need special assistance in gaining access to the Commission should contact the Office of the Secretary at 202–205–2000. General information concerning the Commission may also be obtained by accessing its Internet server (*http://www.usitc.gov*). The public record for this investigation may be viewed on the Commission's electronic docket (EDIS) at *http://edis.usitc.gov*.

SUPPLEMENTARY INFORMATION:

Background. This investigation is being instituted in response to a petition filed on January 26, 2006, by Calgon Carbon Corporation, Pittsburgh, PA, and Norit Americas, Inc., Marshall, TX.

Participation in the investigation and public service list. Persons (other than petitioners) wishing to participate in the investigation as parties must file an entry of appearance with the Secretary to the Commission, as provided in sections 201.11 and 207.10 of the Commission's rules, not later than seven days after publication of this notice in the **Federal Register**. Industrial users and (if the merchandise under investigation is sold at the retail level) representative consumer organizations have the right to appear as parties in Commission antidumping investigations. The Secretary will prepare a public service list containing the names and addresses of all persons, or their representatives, who are parties to this investigation upon the expiration of the period for filing entries of appearance.

Limited disclosure of business proprietary information (BPI) under an administrative protective order (APO) and BPI service list. Pursuant to § 207.7(a) of the Commission's rules, the Secretary will make BPI gathered in this investigation available to authorized applicants representing interested parties (as defined in 19 U.S.C. 1677(9)) who are parties to the investigation under the APO issued in the investigation, provided that the application is made not later than seven days after the publication of this notice in the **Federal Register**. A separate service list will be maintained by the Secretary for those parties authorized to receive BPI under the APO.

Conference. The Commission's Director of Operations has scheduled a conference in connection with this investigation for 9:30 a.m. on February 16, 2006, at the U.S. International Trade Commission Building, 500 E Street, SW., Washington, DC. Parties wishing to participate in the conference should contact Jim McClure (202–205–3191) not later than February 13, 2006, to arrange for their appearance. Parties in support of the imposition of antidumping duties in this investigation and parties in opposition to the imposition of such duties will each be collectively allocated one hour within which to make an oral presentation at the conference. A nonparty who has testimony that may aid the Commission's deliberations may request permission to present a short statement at the conference.

Written submissions. As provided in §§ 201.8 and 207.15 of the Commission's rules, any person may submit to the Commission on or before February 22, 2006, a written brief containing information and arguments pertinent to the subject matter of the investigation. Parties may file written testimony in connection with their presentation at the conference no later than three days before the conference. If briefs or written testimony contain BPI, they must conform with the requirements of sections 201.6, 207.3, and 207.7 of the Commission's rules. The Commission's rules do not authorize filing of submissions with the Secretary by facsimile or electronic means, except to the extent permitted by § 201.8 of the Commission's rules, as amended, 67 FR 68036 (November 8, 2002). Even where electronic filing of a document is permitted, certain documents must also be filed in paper form, as specified in II (C) of the Commission's Handbook on Electronic Filing Procedures, 67 FR 68168, 68173 (November 8, 2002).

In accordance with §§ 201.16(c) and 207.3 of the rules, each document filed by a party to the investigation must be served on all other parties to the investigation (as identified by either the public or BPI service list), and a certificate of service must be timely filed. The Secretary will not accept a document for filing without a certificate of service.

Authority: This investigation is being conducted under authority of title VII of the Tariff Act of 1930; this notice is published pursuant to § 207.12 of the Commission's rules.

By order of the Commission.

Issued: January 27, 2006.

Marilyn R. Abbott,

Secretary to the Commission.

[FR Doc. E6–1403 Filed 2–1–06; 8:45 am]

BILLING CODE 7020–02–P

DEPARTMENT OF JUSTICE

Office of Community Oriented Policing Services; Agency Information Collection Activities: Extension of Currently Approved Collection; Comments Requested

ACTION: 30-day notice of information collection under review: Officer Redeployment Effective (MORE) Grant Closeout Report.

The Department of Justice (DOJ), Office of Community Oriented Policing Services (COPS) has submitted the following information collection request to the Office of Management and Budget (OMB) for review and approval in accordance with the Paperwork Reduction Act of 1995. The proposed information collection is published to obtain comments from the public and affected agencies.

The purpose of this notice is to allow for an additional 30 days for public comment until March 6, 2006. This process is conducted in accordance with 5 CFR 1320.10.

Written comments and/or suggestions regarding the items contained in this notice, especially the estimated public burden and associated response time, should be directed to the Office of Management and Budget, Office of Information and Regulatory Affairs, Attention Department of Justice Desk Officer, Washington, DC 20503. Additionally, comments may be submitted to OMB via facsimile to (202) 395–5806. Written comments and suggestions from the public and affected agencies concerning the proposed collection of information are encouraged. Your comments should address one or more of the following four points:

—Evaluate whether the proposed collection of information is necessary for the proper performance of the functions of the agency, including whether the information will have practical utility;

—Evaluate the accuracy of the agency's estimate of the burden of the proposed collection of information, including the validity of the methodology and assumptions used;

—Enhance the quality, utility, and clarity of the information to be collected; and

—Minimize the burden of the collection of information on those who are to respond, including through the use of appropriate automated, electronic, mechanical, or other technological collection techniques or other forms of information technology, *e.g.*, permitting electronic submission of responses.

Overview of This Information Collection

(1) *Type of Information Collection:* Extension of a Currently Approved Collection.

(2) *Title of the Form/Collection:* Annual Report to Congress—Making Officer Redeployment Effective (MORE) Closeout Report.

(3) *Agency form number, if any, and the applicable component of the Department sponsoring the collection:* None. U.S. Department of Justice Office of Community Oriented Policing Services.

(4) *Affected public who will be asked or required to respond, as well as a brief abstract:* Primary: Law enforcement agencies that are recipients of MORE grants.

(5) *An estimate of the total number of respondents and the amount of time estimated for an average respondent to respond/reply:* It is estimated that 1045 respondents annually will complete the form within one hour.

(6) *An estimate of the total public burden (in hours) associated with the collection:* 1578.25 hours annually.

If additional information is required contact: Robert B. Briggs, Clearance Officer, United States Department of Justice, Justice Management Division, Policy and Planning Staff, Patrick Henry Building, Suite 1600, 601 D Street, NW., Washington, DC 20530.

Dated: January 20, 2006.

Robert B. Briggs,

Clearance Officer, United States Department of Justice.

[FR Doc. E6–1370 Filed 2–1–06; 8:45 am]

BILLING CODE 4410–AT–P

DEPARTMENT OF JUSTICE

Office of Community Oriented Policing Services; Agency Information Collection Activities: Extension of Currently Approved Collection; Comments Requested

ACTION: 30-Day Notice of Information Collection Under Review: Methamphetamine Project, Final Update Report (FUR).

The Department of Justice (DOJ), Office of Community Oriented Policing Services (COPS) has submitted the following information collection request to the Office of Management and Budget (OMB) for review and approval in accordance with the Paperwork Reduction Act of 1995. The proposed information collection is published to obtain comments from the public and affected agencies.

The purpose of this notice is to allow for an additional 30 days for public comment until March 6, 2006. This process is conducted in accordance with 5 CFR 1320.10.

Written comments and/or suggestions regarding the items contained in this notice, especially the estimated public burden and associated response time, should be directed to The Office of Management and Budget, Office of Information and Regulatory Affairs, Attention Department of Justice Desk Officer, Washington, DC 20503. Additionally, comments may be submitted to OMB via facsimile to (202) 395–5806.

Written comments and suggestions from the public and affected agencies concerning the proposed collection of information are encouraged. Your comments should address one or more of the following four points:

(1) Evaluate whether the proposed collection of information is necessary for the proper performance of the functions of the agency, including whether the information will have practical utility;

(2) Evaluate the accuracy of the agency's estimate of the burden of the proposed collection of information, including the validity of the methodology and assumptions used;

(3) Enhance the quality, utility, and clarity of the information to be collected; and

(4) Minimize the burden of the collection of information on those who are to respond, including through the use of appropriate automated, electronic, mechanical, or other technological collection techniques or other forms of information technology, *e.g.*, permitting electronic submission of responses.

Overview of This Information Collection

(1) *Type of Information Collection:* Extension of Currently Approved Collection.

(2) *Title of the Form/Collection:* Methamphetamine Project, Final Update Report (FUR).

(3) *Agency form number, if any, and the applicable component of the Department of Justice sponsoring the collection:* Form Number: None. U.S. Department of Justice, Office of Community Oriented Policing Services (COPS).

(4) *Affected public who will be asked or required to respond, as well as a brief abstract:* Primary: Law Enforcement Agencies and government entities that are Methamphetamine grant recipients.

Other: Universities and Private Non-Profit Agencies. Abstract: The information collected will be used by the COPS Office to determine grantee's progress toward grant implementation and for compliance monitoring efforts.

(5) *An estimate of the total number of respondents and the amount of time estimated for an average respondent to respond:* There will be an estimated 100 responses from methamphetamine grantees. The estimated amount of time required for the average respondent to respond is: 3.0 hours.

(6) *An estimate of the total public burden (in hours) associated with the collection:* 325 hours.

If additional information is required contact: Robert B. Briggs, Clearance Officer, United States Department of Justice, Justice Management Division, Policy and Planning Staff, Patrick Henry Building, Suite 1600, 601 D Street, NW., Washington, DC 20530.

Dated: January 23, 2006.

Robert B. Briggs,

Clearance Officer, United States Department of Justice.

[FR Doc. E6–1371 Filed 2–1–06; 8:45 am]

BILLING CODE 4410–AT–P

DEPARTMENT OF JUSTICE

Office of Community Oriented Policing Services; Agency Information Collection Activities: Extension of Currently Approved Collection; Comments Requested

ACTION: 30–Day Notice of Information Collection Under Review: Methamphetamine Project, Final Update Report (FUR).

The Department of Justice (DOJ), Office of Community Oriented Policing Services (COPS) has submitted the following information collection request to the Office of Management and Budget (OMB) for review and approval in accordance with the Paperwork Reduction Act of 1995. The proposed information collection is published to obtain comments from the public and affected agencies.

The purpose of this notice is to allow for an additional 30 days for public comment until March 6, 2006. This process is conducted in accordance with 5 CFR 1320.10.

Written comments and/or suggestions regarding the items contained in this notice, especially the estimated public burden and associated response time, should be directed to The Office of Management and Budget, Office of Information and Regulatory Affairs, Attention Department of Justice Desk Officer, Washington, DC 20503. Additionally, comments may be submitted to OMB via facsimile to (202) 395–5806.

Written comments and suggestions from the public and affected agencies concerning the proposed collection of information are encouraged. Your comments should address one or more of the following four points:

(1) Evaluate whether the proposed collection of information is necessary for the proper performance of the functions of the agency, including whether the information will have practical utility;

(2) Evaluate the accuracy of the agency's estimate of the burden of the proposed collection of information, including the validity of the methodology and assumptions used;

(3) Enhance the quality, utility, and clarity of the information to be collected; and

(4) Minimize the burden of the collection of information on those who are to respond, including through the use of appropriate automated, electronic, mechanical, or other technological collection techniques or other forms of information technology, *e.g.*, permitting electronic submission of responses.

Overview of This Information Collection:

(1) *Type of Information Collection:* Extension of Currently Approved Collection.

(2) *Title of the Form/Collection:* Methamphetamine Project, Final Update Report (FUR).

(3) *Agency form number, if any, and the applicable component of the Department of Justice sponsoring the collection:* Form Number: None. U.S. Department of Justice, Office of Community Oriented Policing Services (COPS).

(4) *Affected public who will be asked or required to respond, as well as a brief abstract:* Primary: Law Enforcement Agencies and government entities that are Methamphetamine grant recipients. Other: Universities and Private Non-Profit Agencies. Abstract: The information collected will be used by the COPS Office to determine grantee's progress toward grant implementation and for compliance monitoring efforts.

(5) *An estimate of the total number of respondents and the amount of time estimated for an average respondent to respond:* There will be an estimated 100 responses from methamphetamine grantees. The estimated amount of time required for the average respondent to respond is: 3.0 hours.

(6) *An estimate of the total public burden (in hours) associated with the collection:* 325 hours.

If additional information is required contact: Robert B. Briggs, Clearance Officer, United States Department of Justice, Justice Management Division, Policy and Planning Staff, Patrick Henry Building, Suite 1600, 601 D Street, NW., Washington, DC 20530.

Dated: January 23, 2006.

Robert B. Briggs,

Clearance Officer, United States Department of Justice.

[FR Doc. E6–1371 Filed 2–1–06; 8:45 am]

BILLING CODE 4410–AT–P

DEPARTMENT OF JUSTICE

Executive Office for Immigration Review

Agency Information Collection Activities: Proposed Collection; Comments Requested

ACTION: 60-Day Notice of Information Collection Under Review: Notice of Entry of Appearance as Attorney or Representative Before the Immigration Court (Form EOIR–28).

The Department of Justice (DOJ), Executive Office for Immigration Review (EOIR) has submitted the following information collection request to the Office of Management and Budget (OMB) for review and approval in accordance with the Paperwork Reduction Act of 1995. The proposed information collection is published to obtain comments from the public and affected agencies. Comments are encouraged and will be accepted for ''sixty days'' until April 3, 2006. This process is conducted in accordance with 5 CFR 1320.10.

If you have comments especially on the estimated public burden or associated response time, suggestions, or need a copy of the proposed information collection instrument with instructions or additional information, please contact MaryBeth Keller, General Counsel, Executive Office for Immigration Review, U.S. Department of Justice, Suite 2600, 5107 Leesburg Pike, Falls Church, Virginia 22041; telephone: (703) 305–0470.

Written comments and suggestions from the public and affected agencies concerning the proposed collection of information are encouraged. Your comments should address one or more of the following four points:

—Evaluate whether the proposed collection of information is necessary for the proper performance of the

agency's functions, including whether the information will have practical utility;
—Evaluate the accuracy of the agency's estimate of the burden of the proposed collection of information, including the validity of the methodology and assumptions used;
—Enhance the quality, utility, and clarity of the information to be collected; and
—Minimize the burden of the collection of information on those who are to respond, including through the use of appropriate automated, electronic, mechanical, or other technological collection techniques or other forms of information technology, e.g., permitting electronic submission of responses.

Overview of this information collection:

(1) *Type of Information Collection:* Revision of a currently approved collection.

(2) *Title of the Form/Collection:* Notice of Entry of Appearance as Attorney or Representative Before the Immigration Court.

(3) *Agency form number, if any, and the applicable component of the Department of Justice sponsoring the collection:* Form Number: EOIR–28. Executive Office for Immigration Review, United States Department of Justice.

(4) *Affected public who will be asked or required to respond, as well as a brief abstract: Primary:* Attorneys and qualified representatives notifying the Immigration Court that they are representing an alien in immigration proceedings. Other: None. Abstract: This information collection is necessary to allow an attorney or representative to notify the Immigration Court that he or she is representing an alien before the Immigration Court.

(5) *An estimate of the total number of respondents and the amount of time estimated for an average respondent to respond:* It is estimated that 91,700 respondents will complete the form annually with an average of six minutes per response.

(6) *An estimate of the total public burden (in hours) associated with the collection:* There are an estimated 9,170 total burden hours associated with this collection annually.

If additional information is required contact: Robert B. Briggs, Clearance Officer, United States Department of Justice, Justice Management Division, Policy and Planning Staff, Patrick Henry Building, Suite 1600, 601 D Street, NW., Washington, DC 20530.

Dated: January 27, 2006.

Robert B. Briggs,

Clearance Officer, United States Department of Justice.

[FR Doc. 06–965 Filed 2–1–06; 8:45 am]

BILLING CODE 4410–30–M

DEPARTMENT OF JUSTICE

Executive Office of Immigration Review

Agency Information Collection Activities: Proposed Collection; Comments Requested

ACTION: 60-Day Notice of Information Collection Under Review: Immigration Practitioner Complaint Form.

The Department of Justice (DOJ), Executive Office for Immigration Review (EOIR) has submitted the following information collection request to the Office of Management and Budget (OMB) for review and approval in accordance with the Paperwork Reduction Act of 1995. The proposed information collection is published to obtain comments from the public and affected agencies. Comments are encouraged and will be accepted for ''sixty days'' until April 3, 2006. This process is conducted in accordance with 5 CFR 1320.10.

If you have comments especially on the estimated public burden or associated response time, suggestions, or need a copy of the proposed information collection instrument with instructions or additional information, please contact MaryBeth Keller, General Counsel, Executive Office for Immigration Review, U.S. Department of Justice, Suite 2600, 5107 Leesburg Pike, Falls Church, Virginia 22041; telephone: (703) 305–0470.

Written comments and suggestions from the public and affected agencies concerning the proposed collection of information are encouraged. Your comments should address one or more of the following four points:
—Evaluate whether the collection of information is necessary for the proper performance of the functions of the agency, including whether the information will have practical utility;
—Evaluate the accuracy of the agency's estimate of the burden of the proposed collection of information, including the validity of the methodology and assumptions used;
—Enhance the quality, utility, and clarity of the information to be collected; and
—Minimize the burden of the collection of information on those who are to respond, including through the use of appropriate automated, electronic, mechanical, or other technological collection techniques or other forms of information technology, e.g., permitting electronic submission of responses.

Overview of this information collection:

(1) *Type of Information Collection:* Extension of a currently approved collection.

(2) *Title of the Form/Collection:* Immigration Practitioner Complaint Form.

(3) *Agency form number, if any, and the applicable component of the Department of Justice sponsoring the collection:* Form EOIR–44, Executive Office for Immigration Review, United States Department of Justice.

(4) *Affected public who will be asked or required to respond, as well as a brief abstract: Primary:* Individuals who wish to file a complaint against an immigration practitioner authorized to appear before the Board of Immigration Appeals and the immigration courts. Other: None. Abstract: The information on this form will be used to determine whether or not, assuming the truth of the factual allegations, the Office of General Counsel of the Executive Office for Immigration Review should conduct a preliminary disciplinary inquiry, request additional information from the responding complainant, refer the matter to a state bar disciplinary authority or other law enforcement agency, or take no further action.

(5) *An estimate of the total number of respondents and the amount of time estimated for an average respondent to respond:* It is estimated that 500 respondents will complete the form annually with an average of two hours per response.

(6) An estimate of the total public burden (in hours) associated with the collection: There are an estimated 1000 total burden hours associated with this collection annually.

If additional information is required, contact: Robert B. Briggs, Clearance Officer, United States Department of Justice, Justice Management Division, Policy and Planning Staff, Patrick Henry Building, Suite 1600, 601 D Street, NW., Washington, DC 20530.

Dated: January 27, 2006.

Robert B. Briggs,

Clearance Officer, United States Department of Justice.

[FR Doc. 06–966 Filed 2–1–06; 8:45 am]

BILLING CODE 4410–30–M

DEPARTMENT OF JUSTICE

Executive Office for Immigration Review

Agency Information Collection Activities: Proposed Collection; Comments Requested

ACTION: 60-Day Notice of Information Collection Under Review: Notice of Entry of Appearance as Attorney or Representative Before the Board of Immigration Appeals (Form EOIR–27).

The Department of Justice (DOJ), Executive Office for Immigration Review (EOIR) has submitted the following information collection request to the Office of Management and Budget (OMB) for review and approval in accordance with the Paperwork Reduction Act of 1995. The proposed information collection is published to obtain comments from the public and affected agencies. Comments are encouraged and will be accepted for ''sixty days'' until April 3, 2006. This process is conducted in accordance with 5 CFR 1320.10.

If you have comments especially on the estimated public burden or associated response time, suggestions, or need a copy of the proposed information collection instrument with instructions or additional information, please contact MaryBeth Keller, General Counsel, Executive Office for Immigration Review, U.S. Department of Justice, Suite 2600, 5107 Leesburg Pike, Falls Church, Virginia 22041; telephone: (703) 305–0470.

Written comments and suggestions from the public and affected agencies concerning the proposed collection of information are encouraged. Your comments should address one or more of the following four points:

—Evaluate whether the proposed collection of information is necessary for the proper performance of the agency's functions, including whether the information will have practical utility;
—Evaluate the accuracy of the agency's estimate of the burden of the proposed collection of information, including the validity of the methodology and assumptions used;
—Enhance the quality, utility, and clarity of the information to be collected; and
—Minimize the burden of the collection of information on those who are to respond, including through the use of appropriate automated, electronic, mechanical, or other technological collection techniques or other forms of information technology, e.g., permitting electronic submission of responses.

Overview of this information collection:

(1) *Type of Information Collection:* Revision of a currently approved collection.

(2) *Title of the Form/Collection:* Notice of Entry of Appearance as Attorney or Representative Before the Board of Immigration Appeals.

(3) *Agency form number, if any, the applicable component of the Department of Justice sponsoring the collection:* Form Number: EOIR–27. Executive Office for Immigration Review, United States Department of Justice.

(4) *Affected public who will be asked or required to respond, as well as a brief abstract: Primary:* Attorneys and qualified representatives notifying the Board of Immigration Appeals (Board) that they are representing an alien in immigration proceedings. Other: None. Abstract: This information collection is necessary to allow an attorney or representative to notify the Board that he or she is representing an alien before the Board.

(5) *An estimate of the total number of respondents and the amount of time estimated for an average respondent to respond:* It is estimated that 33,980 respondents will complete the form annually with an average of six minutes per response.

(6) *An estimate of the total public burden (in hours) associated with the collection:* There are an estimated 3,398 total burden hours associated with this collection annually.

If additional information is required contact: Robert B. Briggs, Clearance Officer, United States Department of Justice, Justice Management Division, Policy and Planning Staff, Patrick Henry Building, Suite 1600, 601 D Street, NW., Washington, DC 20530.

Dated: January 27, 2006.

Robert B. Briggs,

Clearance Officer, United States Department of Justice.

[FR Doc. 06–967 Filed 2–1–06; 8:45 am]

BILLING CODE 4410–30–M

DEPARTMENT OF JUSTICE

Executive Office for Immigration Review

Agency Information Collection Activities: Proposed Collection; Comments Requested

ACTION: 60-Day Notice of Information Collection Under Review: Notice of Appeal from a Decision of an Adjudicating Official in a Practitioner Disciplinary Case.

The Department of Justice (DOJ), Executive Office for Immigration Review (EOIR) has submitted the following information collection request to the Office of Management and Budget (OMB) for review and approval in accordance with the Paperwork Reduction Act of 1995. The proposed information collection is published to obtain comments form the public and affected agencies. Comments are encouraged and will be accepted until April 3, 2006. This process is conducted in accordance with 5 CFR 1320.10.

If you have comments especially on the estimated public burden or associated response time, suggestions, or need a copy of the proposed information collection instrument with instructions or additional information, please contact MaryBeth Keller, General Counsel, Executive Office for Immigration Review, U.S. Department of Justice, Suite 2600, 5107 Leesburg Pike, Falls Church, Virginia 22041; telephone: (703) 305–0470.

Written comments and suggestions from the public and affected agencies concerning the proposed collection of information are encouraged. Your comments should address one or more of the following four points:

—Evaluate whether the collection of information is necessary for the proper performance of the functions of the agency, including whether the information will have practical utility;
—Evaluate the accuracy of the agency's estimate of the burden of the proposed collection of information, including the validity of the methodology and assumptions used;
—Enhance the quality, utility, and clarity of the information to be collected; and
—Minimize the burden of the collection of information on those who are to respond, including through the use of appropriate automated, electronic, mechanical, or other technological collection techniques or other forms of information technology, e.g., permitting electronic submission of responses.

Overview of this information collection:

(1) *Type of Information Collection:* Extension of a currently approved collection.

(2) *Title of the Form/Collection:* Notice of Appeal from a Decision of an Adjudicating Official in a Practitioner Disciplinary Case.

(3) *Agency form number, if any, and the applicable component of the Department of Justice sponsoring the*

collection: Form EOIR–45, Executive Office for Immigration Review, United States Department of Justice.

(4) *Affected public who will be asked to required to respond, as well as brief abstract: Primary:* A party who appeals a practitioner disciplinary decision by the adjudicating official to the Board of Immigration Appeals (Board). Other: None. Abstract: Once the adjudicating official issues a practitioner disciplinary decision, either party or both parties may appeal the decision to the Board for de novo review of the record, pursuant to 8 CFR 1003.106(c).

(5) *An estimate of the total number of respondents and the amount of time estimated for an average respondent to respond:* It is estimated that 50 respondents will complete the form annually with an average of one hour per response.

(6) *An estimate of the total public burden (in hours) associated with the collection:* There are an estimated 50 total burden hours associated with this collection annually.

If additional information is required contact: Robert B. Briggs, Clearance Officer, United States Department of Justice, Justice Management Division, Policy and Planning Staff, Patrick Henry Building, Suite 1600, 601 D Street, NW., Washington, DC 20530.

Dated: January 27, 2006.

Robert B. Briggs,

Department Clearance Officer, United States Department of Justice.

[FR Doc. 06–968 Filed 2–1–06; 8:45 am]

BILLING CODE 4410–30–M

DEPARTMENT OF JUSTICE

Federal Bureau of Investigation

Agency Information Collection Activities: Proposed Collection, Comments Requested

ACTION: 30-Day Notice of Information Collection Under Review: Age, Sex, and Race of Persons Arrested 18 Years of Age and Over; Age, Sex, and Race of Persons Arrested Under 18 Years of Age.

The Department of Justice, Federal Bureau of Investigation, Criminal Justice Information Services Division has submitted the following information collection request to the Office of Management and Budget (OMB) for review and clearance in accordance with established review procedures of the Paperwork Reduction Act of 1995. The proposed information collection is published to obtain comments from the public and affected agencies. This proposed information collection was previously published in the **Federal Register** on September 28, 2005, Volume 70, Number 187, Pages 56737–56738 allowing for a 60-day comment period.

The purpose of this notice is to allow for an additional 30 days for public comment until March 6, 2006. This process is conducted in accordance with 5 CFR 1320.10.

Written comments and/or suggestions regarding the items contained in this notice, especially the estimated public burden and associated response time, should be directed to Gregory E. Scarbro, Unit Chief, Federal Bureau of Investigation, Criminal Justice Information Services Division (CJIS), Module E–3, 1000 Custer Hollow Road, Clarksburg, West Virginia 26306, or facsimile to (304) 625–3566.

Written comments and suggestions from the public and affected agencies concerning the proposed collection of information are encouraged. Comments should address one or more of the following four points:

(1) Evaluate whether the proposed collection of information is necessary for the proper performance of the functions of the agency, including whether the information will have practical utility;

(2) Evaluate the accuracy of the agency's estimate of the burden of the proposed collection of information, including the validity of the methodology and assumptions used;

(3) Enhance the quality, utility, and clarity of the information to be collected; and

(4) Minimize the burden of the collection of information on those who are to respond, including through the use of appropriate automated, electronic, mechanical, or other technological collection techniques of other forms of information technology, *e.g.*, permitting electronic submission of responses.

Overview of this information collection:

(1) *Type of information collection:* Extension of current collection.

(2) *The title of the form/collection:* Age, Sex, and Race of Persons Arrested 18 Years of Age and Over; Age, Sex, and Race of Persons Arrested Under 18 Years of Age.

(3) *The agency form number, if any, and the applicable component of the department sponsoring the collection:* Forms 1–708 and 1–708a; Criminal Justice Information Services Division, Federal Bureau of Investigation, Department of Justice.

(4) *Affected public who will be asked or required to respond, as well as a brief abstract:* Primary: Local and State Law Enforcement Agencies. This collection is needed to collect information on arrest offenses committed throughout the United States. Data are tabulated and published in the annual Crime in the United States.

(5) *An estimate of the total number of respondents and the amount of time estimated for an average respondent to respond:* There are approximately 17,499 law enforcement agency respondents at 12 minutes for 1–708a and 15 minutes for 1–708.

(6) *An estimate of the total public burden (in hours) associated with this collection:* There are approximately 94,495 hours annual burden associated with this information collection.

If additional information is required contact: Robert B. Briggs, Clearance Officer, Policy and Planning Staff, Justice Management Division, United States Department of Justice, Patrick Henry Building, Suite 1600, 601 D Street, NW., Washington, DC 20530.

Dated: January 25, 2006.

Robert B. Briggs,

Department Clearance Officer, United States Department of Justice.

[FR Doc. E6–1401 Filed 2–1–06; 8:45 am]

BILLING CODE 4410–02–P

NATIONAL SCIENCE FOUNDATION

National Science Board; Workshop on Hurricane Science and Engineering

Date and Time: February 7, 2006, 8 a.m.–5:15 p.m. (MT).

Place: National Center for Atmospheric Research, Center Green Campus, Boulder, Colorado.

Contact Information: Please refer to the National Science Board Web site (*http://www.nsf.gov/nsb*) for updated Agenda. NSB Office: Mrs. Susan E. Fannoney (703) 292–7000.

Status: This Workshop will be open to the public.

Provisional Agenda

Toward a National Agenda for Hurricane Science and Engineering

Workshop #2: The Research Community

8 a.m. Welcoming Remarks
- Dr. Warren M. Washington, Chairman, National Science Board

8:05 a.m. Motivation, Purpose and Goals
- Drs. Kelvin K. Droegemeier and Ken Ford, National Science Board Members and co-Chairs of Board Task Force on Hurricane Science and Engineering

8:20 a.m. Process and Logistics for NSB Workshops
- Dr. Michael Crosby, Executive Officer, National Science Board

8:30 a.m. Panel Session I: Physical, Biological and Ecological Sciences
9:30 a.m. Roundtable Discussion
10 a.m. Break
10:15 a.m. Panel Session II: Social, Behavioral and Economic Sciences
11:15 a.m. Roundtable Discussion
11:45 a.m. Break
1 p.m. Panel Session III: Engineering and Infrastructure
2 p.m. Roundtable Discussion
2:30 p.m. Break-Out Groups (Sessions I, II, III)
4 p.m. Break-Out Group Reports and Discussion 5 p.m. Summary and Next Steps
5:15 p.m. Adjourn

Michael P. Crosby,
Executive Officer and NSB Office Director.
[FR Doc. E6–1374 Filed 2–1–06; 8:45 am]
BILLING CODE 7555–01–P

NATIONAL SCIENCE FOUNDATION

National Science Board; Hearing on 21st Century Education in Science, Mathematics and Technology

Date and Time: February 10, 2006, 12:30 p.m.–6 p.m. (MT).
Place: University of Colorado, University Memorial Center, Room 235 (Student Union), Boulder, Colorado.
Contact Information: Please refer to the National Science Board Web site (*http://www.nsf.gov/nsb*) for updated Agenda and information on Webcast. NSB Office: Mrs. Susan E. Fannoney (703) 292–7000.
Status: This Hearing will be open to the public.

Provisional Agenda

12:30 p.m. Welcome
Warren M. Washington, Chairman, National Science Board, Senior Scientist and Section Head, National Center for Atmospheric Research
12:35 p.m. Opening Remarks
Steven C. Beering, National Science Board, President Emeritus, Purdue University
12:45 p.m. Congressional Commentary and Discussion
Congressman Mark Udall, Ranking Member, Subcommittee on Space and Aeronautics, Committee on Science
1 p.m. Panelist Commentary
Susan Windels , Colorado General Assembly, Chair, Senate Education Committee
Randy Dehoff, Colorado Department of Education, Colorado State Board of Education
John Evans, Colorado General Assembly, Senate Education Committee
Keith King, Colorado General Assembly, House Education Committee
1:35 p.m. Roundtable Discussion
1:45 p.m. Panelist Commentary
Cindy Stevenson, Superintendent, Jefferson County Public Schools
Cindy Moss, K–12 Science Coordinator, Charlotte/Mecklenburg Public Schools
Terry Joyner, Chief Academic Officer, Cincinnati Public Schools
Timothy McCollum, 7–12 Science Teacher, Charleston Middle School
2:15 p.m. Roundtable Discussion
2:25 p.m. Panelist Commentary
Michael Barnett, Senior Physicist and Educator, Lawrence Berkeley National Laboratory
Joseph Heppert, Chairman, Department of Chemistry, University of Kansas
Thomas Smith, Professor of Chemistry and Microsystems Engineering, Rochester Institute of Technology
Karin Wiburg, Associate Dean for Research, New Mexico State University
2:55 p.m. Roundtable Discussion
3:05 p.m. Break
3:20 p.m. Panelist Commentary
Shirley Malcom, Head, Directorate for Education, American Association for the Advancement of Science (AAAS)
Dennis Bartels, President, TERC Science and Math Learning
Leon Lederman, Fermilab Director Emeritus and Chairman, Teachers Academy for Mathematics and Science
Judith Opert Sandler, Vice President, Education Development Center, Inc.
3:50 p.m. Roundtable Discussion
4 p.m. Panelist Commentary
Ruth David, President and CEO, Analytic Services, Inc.
James Von Her, Founder, Chairman, and CEO, Zyvex Corp.
Della Williams, President and CEO, Williams-Pyro, Inc.
Robin Willner, Vice President, Global Community Relations, IBM Corp.
Michael Miravalle, President and CEO, Dolphin Technology, Inc.
4:35 p.m. Roundtable Discussion
4:45 p.m. Comments from the Audience.
6 p.m. Closing Remarks
Dr. Beering

Michael P. Crosby,
Executive Officer and NSB Office Director.
[FR Doc. E6–1375 Filed 2–1–06; 8:45 am]
BILLING CODE 7555–01–P

NUCLEAR REGULATORY COMMISSION

[Docket No. 50–263]

Nuclear Management Company, LLC, Monticello Nuclear Generating Plant; Notice of Availability of the Draft Supplement 26 to the Generic Environmental Impact Statement and Public Meeting for the License Renewal of Monticello Nuclear Generating Plant

Notice is hereby given that the U.S. Nuclear Regulatory Commission (NRC or the Commission) has published a draft plant-specific Supplement to the ''Generic Environmental Impact Statement (GEIS), NUREG–1437,'' regarding the renewal of operating license DPR–22 for an additional 20 years of operation at Monticello Nuclear Generating Plant (Monticello). Monticello is located on the southern bank of the Mississippi River in the City of Monticello, Wright County, Minnesota, approximately 30 miles northwest of Minneapolis, St. Paul, Minnesota. Possible alternatives to the proposed action (license renewal) include no action and reasonable alternative energy sources.

The draft Supplement to the GEIS is publicly available in the NRC's Public Document Room (PDR) located at One White Flint North, 11555 Rockville Pike (first floor), Rockville, Maryland 20852 or from the Publicly Available Records (PARS) component of NRC's Agencywide Documents Access and Management System (ADAMS). ADAMS is accessible from the Public Electronic Reading Room on the NRC's Web site at *http://www.nrc.gov/readingrm/adams.html*. The ADAMS accession number for draft Supplement 26 to the GEIS is ML060190072. Persons who do not have access to ADAMS, or who encounter problems in accessing the documents located in ADAMS, should contact the PDR reference staff at 1–800–397–4209, 301–415–4737, or by e-mail to *pdr@nrc.gov*.

In addition, the Monticello Public Library (220 West 6th Street, Monticello, Minnesota 55362) and the Buffalo Public Library (18 Northwest Lake Boulevard, Buffalo, Minnesota 55313) have agreed to make the draft plant-specific supplement to the GEIS available for public inspection.

Interested parties may submit comments on the draft supplement to the GEIS for consideration by the NRC staff. To be certain of consideration, comments on the draft supplement to the GEIS and the proposed action must be received by May 4, 2006. Comments received after the due date will be

considered if it is practical to do so, but the NRC staff is able to assure consideration only for comments received on or before this date. Written comments on the draft supplement to the GEIS should be sent to: Chief, Rules and Directives Branch, Division of Administrative Services, Office of Administration, Mailstop T–6D59, U.S. Nuclear Regulatory Commission, Washington, DC 20555–0001.

Comments may be hand-delivered to the NRC at 11545 Rockville Pike, Room T–6D59, Rockville, Maryland, between 7:30 a.m. and 4:15 p.m. on Federal workdays. Electronic comments may be submitted to the NRC by e-mail at *MonticelloEIS@nrc.gov*. All comments received by the Commission, including those made by Federal, State, and local agencies, Native American Tribes, or other interested persons, will be made available electronically at the Commission's PDR in Rockville, Maryland, and in ADAMS.

The NRC staff will hold two public meetings to present an overview of the draft plant-specific supplement to the GEIS and to accept public comments on the document. The public meetings will be held on March 22, 2006, at the Monticello Community Center, 505 Walnut Street in Monticello, Minnesota. The first meeting will convene at 1:30 p.m. and will continue until 4:30 p.m., as necessary. The second meeting will convene at 7 p.m. and will continue until 10 p.m., as necessary. Both meetings will be transcribed and will include: (1) A presentation of the contents of the draft plant-specific supplement to the GEIS, and (2) the opportunity for interested government agencies, organizations, and individuals to provide comments on the draft report. Additionally, the NRC staff will host informal discussions one hour before the start of each meeting at the Monticello Community Center. No comments on the draft supplement to the GEIS will be accepted during the informal discussions. To be considered, comments must be provided either at the transcribed public meetings or in writing, as discussed below.

Persons may register to attend or present oral comments at the meetings by contacting Ms. Jennifer A. Davis, by telephone at 1–800–368–5642, extension 3835, or by e-mail at *MonticelloEIS@nrc.gov* no later than March 17, 2006. Members of the public may also register to speak at the meeting within 15 minutes of the start of each session. Individual oral comments may be limited by the time available, depending on the number of persons who register. Members of the public who have not registered may also have an opportunity to speak, if time permits. Ms. Davis will need to be contacted no later than March 17, 2006, if special equipment or accommodations are needed to attend or present information at the public meeting, so that the NRC staff can determine whether the request can be accommodated.

FOR FURTHER INFORMATION CONTACT: Ms. Jennifer A. Davis, Division of License Renewal, Office of Nuclear Reactor Regulation, U.S. Nuclear Regulatory Commission, Washington, DC 20555–0001. Ms. Davis may also be contacted at the aforementioned telephone number or e-mail address.

Dated at Rockville, Maryland, this 23rd day of January, 2006.

For the Nuclear Regulatory Commission.

Pao-Tsin Kuo,

Deputy Director, Division of License Renewal, Office of Nuclear Reactor Regulation.

[FR Doc. E6–1387 Filed 2–1–06; 8:45 am]

BILLING CODE 7590–01–P

NUCLEAR REGULATORY COMMISSION

Draft Regulatory Guide: Issuance, Availability

The U.S. Nuclear Regulatory Commission (NRC) has issued for public comment a draft revision to an existing guide in the agency's Regulatory Guide Series. This series has been developed to describe and make available to the public such information as methods that are acceptable to the NRC staff for implementing specific parts of the NRC's regulations, techniques that the staff uses in evaluating specific problems or postulated accidents, and data that the staff needs in its review of applications for permits and licenses.

Draft Revision 1 of Regulatory Guide 1.76, entitled ''Design-Basis Tornado and Tornado Missiles for Nuclear Power Plants,'' is temporarily identified by its task number, DG–1143, which should be mentioned in all related correspondence. This proposed revision provides licensees and applicants with new guidance that the NRC staff considers acceptable for use in selecting the design-basis tornado and design-basis tornado-generated missiles that a nuclear power plant should be designed to withstand in each of the three regions within the contiguous United States to prevent undue risk to the health and safety of the public.

By contrast, the predecessor to this revision, entitled ''Design-Basis Tornadoes for Nuclear Power Plants,'' did not include guidance on the selection of design-basis tornado-generated missiles. Such missiles were previously addressed in Section 3.5.1.4, ''Missiles Generated by Natural Phenomena,'' of NUREG–0800, ''Standard Review Plan for the Review of Safety Analysis Reports for Nuclear Power Plants'' (SRP). With this draft Revision 1 of Regulatory Guide 1.76, the staff added related guidance for licensees and applicants because the Standard Review Plan (SRP) is intended to provide guidance to NRC reviewers, rather than licensees and applicants.

In particular, General Design Criterion (GDC) 2, ''Design Bases for Protection Against Natural Phenomena,'' of Appendix A, ''General Design Criteria for Nuclear Power Plants,'' to Title 10, Part 50, of the Code of Federal Regulations (10 CFR part 50), requires that structures, systems, and components that are important to safety must be designed to withstand the effects of natural phenomena such as tornadoes without loss of capability to perform their safety functions. GDC 2 also requires that the design bases for these structures, systems, and components shall reflect (1) appropriate consideration of the most severe of the natural phenomena that have been historically reported for the site and surrounding area, with sufficient margin for the limited accuracy, quantity, and period of time in which the historical data have been accumulated, (2) appropriate combinations of the effects of normal and accident conditions with the effects of the natural phenomena, and (3) the importance of the safety functions to be performed.

Additionally, GDC 4, ''Environmental and Dynamic Effects Design Bases,'' of Appendix A to 10 CFR part 50 requires, in part, that structures, systems, and components that are important to safety must be protected against the effects of missiles from events and conditions outside the plant.

In addition, for stationary power reactor site applications submitted before January 10, 1997, Paragraph 100.10c(2) of 10 CFR part 100, ''Reactor Site Criteria,'' states that meteorological conditions at the site and in the surrounding area should be considered in determining the acceptability of a site for a power reactor.

By contrast, for stationary power reactor site applications submitted on or after January 10, 1997, Paragraph 100.20c(2) of 10 CFR part 100 requires that meteorological characteristics of the site that are necessary for safety analysis or may have an impact upon plant design (such as maximum probable wind speed) must be considered in determining the acceptability of a site for a nuclear power plant. In addition, Paragraph 100.21(d) of 10 CFR part 100

requires that the physical characteristics of the site, including meteorology, must be evaluated and site parameters established such that potential threats from such physical characteristics will pose no undue risk to the type of facility proposed to be located at the site.

The essence of these requirements is that nuclear power plants must be designed so that the plants remain in a safe condition in the event of the most severe tornado that can reasonably be predicted to occur at a site as a result of severe meteorological conditions. The original version of Regulatory Guide 1.76, published in April 1974, was based on WASH–1300, ''Technical Basis for Interim Regional Tornado Criteria,'' which the NRC (then the Atomic Energy Commission) published in May 1974. WASH–1300 chose the design-basis tornado wind speeds so that the probability of occurrence of a tornado that exceeded the design-basis was on the order of 10^{-7} per year per nuclear power plant. WASH–1300 used 2 years of observed tornado intensity data (1971 and 1972) to derive design-basis tornado characteristics for three regions within the continental United States.

By contrast, the design-basis tornado wind speeds presented in this draft regulatory guide are based on Revision 1 to NUREG/CR–4461, ''Tornado Climatology of the Contiguous United States,'' which the NRC published in April 2005. The tornado database used in the revised NUREG/CR–4461 includes information recorded for more than 46,800 tornado segments occurring from January 1, 1950, through August 31, 2003. More than 39,600 of those segments had sufficient information on location, intensity, length, and width to be used in the analysis of tornado strike probabilities and maximum wind speeds. The methods used in this analysis are similar to those used in the analysis of the initial tornado climatology leading to initial publication of NUREG/CR–4461 in 1986, with the addition of a term to account for finite dimensions of structures (sometimes called the ''lifeline'' term), as well as consideration of the variation of wind speeds along and across the tornado footprint. The basic idea is that, for finite structures, a tornado striking any point on the structure can cause damage. (The original NUREG/CR–4461 used a point model, where the nuclear power plant was assumed to be a point structure. Therefore, including the finite dimensions of structures increases the tornado strike probability.)

Draft Regulatory Guide DG–1143 does not address the determination of the design-basis tornado and tornado missiles for sites located in Alaska, Hawaii, or Puerto Rico; such determinations will be evaluated on a case-by-case basis. This guide also does not identify the specific structures, systems, and components that should be designed to withstand the effects of the design-basis tornado or should be protected from tornado-generated missiles and remain functional. In addition, this guide does not address the missiles attributable to extreme winds, such as hurricanes, which the NRC staff will consider on a case-by-case basis when identified.

To accompany Draft Regulatory Guide DG–1143, the NRC is issuing updates to proposed Revision 3 of Section 2.3.1, ''Regional Climatology,'' and Section 3.5.1.4, ''Missiles Generated by Tornadoes and Extreme Winds,'' of the SRP, which the staff previously issued for public comment in April 1996. These sections of the SRP relate to Draft Regulatory Guide DG–1143, in that all three documents concern the compliance of nuclear power plant designs with GDCs 2 and 4 for severe weather phenomena. However, Draft Regulatory Guide DG–1143 provides practices and principles for the benefit of licensees and applicants, while SRP Sections 2.3.1 and 3.5.1.4 provide guidance to NRC reviewers. The latest updates to SRP Section 2.3.1 (1) modify the scope of the severe weather phenomena that should be addressed by applicants for construction permits, operating licenses, early site permits, and combined licenses; (2) include new data sources that should be used in reviewing the information provided by the license applicants; and (3) clarify the review guidance. By contrast, the changes to SRP Section 3.5.1.4 include deleting the specifications for design-basis tornado missiles, since that information is now provided in Draft Regulatory Guide DG–1143.

The NRC staff is soliciting comments on Draft Regulatory Guide DG–1143, as well as SRP Sections 2.3.1 and 3.5.1.4. Please mention the relevant document identifiers (DG–1143, SRP 2.3.1, and/or SRP 3.5.1.4) in the subject line of your comments; comments may be accompanied by relevant information or supporting data. Comments submitted in writing or in electronic form will be made available to the public in their entirety through the NRC's Agencywide Documents Access and Management System (ADAMS). Personal information will not be removed from your comments. You may submit comments by any of the following methods.

Mail comments to: Rules and Directives Branch, Office of Administration, U.S. Nuclear Regulatory Commission, Washington, DC 20555–0001.

E-mail comments to: NRCREP@nrc.gov. You may also submit comments via the NRC's rulemaking Web site at *http://www.ruleforum.llnl.gov*. Address questions about our rulemaking Web site to Carol A. Gallagher (301) 415–5905; e-mail *CAG@nrc.gov*.

Hand-deliver comments to: Rules and Directives Branch, Office of Administration, U.S. Nuclear Regulatory Commission, 11555 Rockville Pike, Rockville, Maryland 20852, between 7:30 a.m. and 4:15 p.m. on Federal workdays.

Fax comments to: Rules and Directives Branch, Office of Administration, U.S. Nuclear Regulatory Commission at (301) 415–5144.

Requests for technical information about Draft Regulatory Guide DG–1143 and/or SRP Sections 2.3.1 and 3.5.1.4 may be directed to Dr. Arthur J. Buslik at (301) 415–6184 or by e-mail to *AJB@nrc.gov*, or Jin-Sien Guo at (301) 415–1816 or by e-mail to *JSG@nrc.gov*.

Comments would be most helpful if received by March 27, 2006. Comments received after that date will be considered if it is practical to do so, but the NRC is able to ensure consideration only for comments received on or before this date. Although a time limit is given, comments and suggestions in connection with items for inclusion in guides currently being developed or improvements in all published guides are encouraged at any time.

Electronic copies of Draft Regulatory Guide DG–1143 are available through the NRC's public Web site under Draft Regulatory Guides in the Regulatory Guides document collection of the NRC's Electronic Reading Room at *http://www.nrc.gov/reading-rm/doc-collections/*. Similarly, electronic copies of SRP Sections 2.3.1 and 3.5.1.4 are available at *http://www.nrc.gov/reading-rm/doc-collections/nuregs/staff/sr0800/#c2* and *http://www.nrc.gov/reading-rm/doc-collections/nuregs/staff/sr0800/#c3*, respectively. In addition, electronic copies of the three draft documents are available in the NRC's Agencywide Documents Access and Management System (ADAMS) at *http://www.nrc.gov/reading-rm/adams.html*, under Accession #ML053140225 (DG–1143), #ML053570372 (SRP Section 2.3.1), and #ML053570376 (SRP Section 3.5.1.4).

Regulatory guides are also available for inspection at the NRC's Public Document Room (PDR), which is located at 11555 Rockville Pike, Rockville, Maryland; the PDR's mailing address is USNRC PDR, Washington, DC

20555–0001. The PDR can also be reached by telephone at (301) 415–4737 or (800) 397–4205, by fax at (301) 415–3548, and by e-mail to *PDR@nrc.gov*. Requests for single copies of draft or final guides (which may be reproduced) or for placement on an automatic distribution list for single copies of future draft guides in specific divisions should be made in writing to the U.S. Nuclear Regulatory Commission, Washington, DC 20555–0001, Attention: Reproduction and Distribution Services Section; by e-mail to *DISTRIBUTION@nrc.gov*; or by fax to (301) 415–2289. Telephone requests cannot be accommodated.

Regulatory guides are not copyrighted, and Commission approval is not required to reproduce them.

(5 U.S.C. 552(a))

Dated at Rockville, Maryland, this 17th day of January, 2006.

For the U.S. Nuclear Regulatory Commission.

Richard J. Barrett,

Deputy Director, Division of Risk Analysis and Applications, Office of Nuclear Regulatory Research.

[FR Doc. E6–1386 Filed 2–1–06; 8:45 am]

BILLING CODE 7590–01–P

SECURITIES AND EXCHANGE COMMISSION

Sunshine Act Meeting

FEDERAL REGISTER CITATION OF PREVIOUS ANNOUNCEMENT: 71 FR 4624, January 27, 2006.

STATUS: Closed Meeting.

PLACE: 100 F Street, NE., Washington, DC.

ANNOUNCEMENT OF ADDITIONAL MEETING: Additional Meeting.

A Closed Meeting has been scheduled for Thursday, February 2, 2006 at 2 p.m.

Commissioners, Counsel to the Commissioners, the Secretary to the Commission, and recording secretaries will attend the Closed Meeting. Certain staff members who have an interest in the matters may also be present.

The General Counsel of the Commission, or his designee, has certified that, in his opinion, one or more of the exemptions set forth in 5 U.S.C. 552b(c)(3), (5), (7), (9)(B) and (10) and 17 CFR 200.402(a)(3), (5), (7), 9(ii) and (10) permit consideration of the scheduled matter at the Closed Meeting.

Commissioner Nazareth, as duty officer, voted to consider the items listed for the closed meeting in closed session, and determined that no earlier notice thereof was possible.

The subject matter of the Closed Meeting scheduled for Thursday, February 2, 2006 will be:

Formal orders of investigations;
Institution and settlement of injunctive actions;
Institution and settlement of administrative proceedings of an enforcement nature; and
Amicus consideration.

At times, changes in Commission priorities require alterations in the scheduling of meeting items. For further information and to ascertain what, if any, matters have been added, deleted or postponed, please contact:

The Office of the Secretary at (202) 551–5400.

Dated: January 31, 2006.

Jill M. Peterson,

Assistant Secretary.

[FR Doc. 06–1007 Filed 1–31–06; 12:09 pm]

BILLING CODE 8010–01–P

DEPARTMENT OF STATE

[Public Notice 5293]

Bureau of Educational and Cultural Affairs (ECA) Request for Grant Proposals: Summer Institute for German Student Leaders in Education

Announcement Type: New Cooperative Agreement.

Funding Opportunity Number: ECA/A/E/EUR–06–05.

Catalog of Federal Domestic Assistance Number:

Key Dates: July 17, 2006–March 16, 2007.

Application Deadline: March 17, 2006.

Summary: The Office of Academic Exchange Programs, European and Eurasian Programs Branch (ECA/A/E/EUR), announces an open competition for a Summer Institute for German Student Leaders in Education. Accredited U.S. post-secondary educational institutions may submit proposals to provide a six-week integrated and uniquely designed program that offers intensive English and focuses on pedagogy and U.S. and cultural studies for one group of up to ten (10) German advanced undergraduate students in education, representing diverse sectors, particularly immigrant populations, from multiple German universities. The Bureau of Educational and Cultural Affairs (the Bureau) anticipates providing one assistance award to support this program.

I. Funding Opportunity Description

Authority: Overall grant making authority for this program is contained in the Mutual Educational and Cultural Exchange Act of 1961, Public Law 87–256, as amended, also known as the Fulbright-Hays Act. The purpose of the Act is ''to enable the Government of the United States to increase mutual understanding between the people of the United States and the people of other countries * * * to strengthen the ties which unite us with other nations by demonstrating the educational and cultural interests, developments, and achievements of the people of the United States and other nations * * * and thus to assist in the development of friendly, sympathetic and peaceful relations between the United States and the other countries of the world.'' The funding authority for the program above is provided through legislation.

Purpose: The goal of the Summer Institute for German Student Leaders in Education is to provide young Germans from diverse backgrounds, especially immigrant communities in Germany, and multiple German universities, who are underrepresented in the Fulbright Program and other traditional exchanges, with the opportunity to learn about the United States, and to become familiar with American pedagogical philosophy and techniques. During the program, the students, who are expected to become teachers in Germany following their graduation from university, will become familiar with U.S. campus life, meet a variety of U.S. citizens and have a valuable cultural experience. U.S. institutions of higher education having experience in teacher training/assessment may apply to develop, administer, and provide follow-up to the six-week summer program.

Guidelines: The program should be designed to support the following specific activities/components:

(a) A two-week intensive English program to strengthen the participants' language abilities before undertaking the academic program.

(b) A four-week academic program that will enhance teaching skills and methodology in various subject fields as its main objective. The program should emphasize American pedagogical practices, the U.S. higher educational system, and the role of teaching in U.S. history and civil society.

(c) Structured cultural activities planned within the six-week program to facilitate interaction among the German participants, U.S. students, faculty, administrators, and the local community, including through hands-

on community service, to promote mutual understanding between the people of the United States and the people of Germany.

(d) Two highly qualified U.S. mentors/escorts who exhibit cultural sensitivity and an understanding of the program's objectives, and who should accompany the student participants throughout the entire program. These mentors/escorts will take on the role of cultural interpreters and help the participants to network with other students and the community at large. The mentors/escorts must actively participate in classroom sessions, reside with students in dormitories or other accommodations, direct cultural and recreational activities during weekends, and escort students during the educational travel component.

(e) The creation of a website and a listserv to facilitate follow-on mentoring/participant networking concerning final project implementation and to continue a dialog on ideas developed during the institute.

(f) Assistance to participants while in the U.S. to select, purchase and ship professional materials to use in follow-on activities in their home country.

(g) One post-institute alumni workshop that will take place in Germany in coordination with the German Fulbright Commission.

The first two weeks of the academic program should focus on intensive English. The following four-week program should include lectures as well as group discussions and exercises focusing on topics such as classroom techniques and pedagogical, teaching and learning theory and practice. In addition, the institute should include an introduction to the history, evolution and role of education in U.S. society, history, culture, and literature, and the importance of civil society, critical thinking, and citizen participation. The institute should incorporate a focus on contemporary American life.

Applicant organizations should take into account that the participants may have limited knowledge of the United States and varying degrees of experience in expressing their opinions in a classroom environment, and should tailor their proposed curriculum and classroom activities accordingly. The host institution will be required to develop a program that provides ample time and opportunity for discussion and interaction, not simply standard lectures or broad survey reading assignments. Local site visits to primary and/or secondary schools, other colleges, and research institutions should be part of the academic program.

The program should also include opportunities for participants to meet American citizens from a variety of ethnic, religious, and socio-economic backgrounds. The host institution should make a special effort to provide opportunities for the participants to interact with their peers in the United States on a regular basis, and to speak to appropriate student and civic groups about their experiences and life in their home countries.

Pending availability of FY 2006 funds, the institute activities should begin on or about July 17, 2006 with follow-up activities to end before December 15, 2006.

Programs must comply with J–1 visa regulations. Please refer to the Solicitation Package for further information.

Program Administration: All Summer Institute programming and administrative logistics, management of the intensive English and academic programs, field trips, and on-site arrangements will be the responsibility of the grantee organization. The grantee organization is also responsible for arrangements for lodging, food, maintenance and local travel for participants while in the U.S. The grantee organization should balance cost-effectiveness in accommodations and meal plans with flexibility for differing diets and individual needs of the participants while in the U.S. Single rooms or housing in residential suites, which offer privacy, are preferable.

The Fulbright Commission in Germany will handle the cost of ticketing for international travel.

The project will provide each participant with a supplemental book allowance of $200 per person. The grantee organization should assist participants in selection, acquisition and shipment of materials to Germany. The grantee organization should also arrange for institutional or publishers' discounts for participants, as possible.

Proposals should describe the available health care system and the plan to provide health care access to institute participants. The Department of State will provide limited health insurance coverage to all participants.

Participant Selection: Participants will be selected by the Bureau based on nominations from the German Fulbright Commission. Minimum qualifications for all participants will be (1) adequate proficiency in English to allow full participation in and benefit from the program, (2) enrollment in programs at German universities that lead to teaching degrees, (3) high level of academic achievement, as indicated by academic grades, awards, and teacher recommendations, and (4) demonstration of a commitment to community and university activities in Germany.

Participants will enter the United States on J-visas, using DS–2019 forms issued by the Office of Academic Programs, European and Eurasian Programs Branch, Bureau of Educational and Cultural Affairs (ECA/A/E/EUR).

Orientation: The grantee organization will provide general pre-departure orientation materials for all participants prior to their travel to the United States. This material might include a tentative program outline with suggested goals and objectives, relevant background information about the U.S. institution and individuals involved in the project, and information concerning arrival in the host city, local housing, climate, and available services at the host institution.

Needs Assessment: The applicant organization should conduct an initial needs assessment of participants and upon their arrival in the U.S. be prepared to adjust program emphasis as necessary to respond to participants' needs.

Cooperative Agreement: In a cooperative agreement, ECA/A/E/EUR is substantially involved in program activities above and beyond routine grant monitoring. Office activities and responsibilities for this program are as follows:

- Participants will be selected by the ECA/A/E/EUR based on nominations from the German Fulbright Commission.
- Participants will enter the United States on J-visas, using DS–2019 forms issued by the ECA/A/E/EUR.
- The German Fulbright Commission will arrange participants' international travel.
- ECA/A/E/EUR will facilitate sending pre-arrival orientation materials electronically to participants via the German Fulbright Commission.

ECA/A/E/EUR will provide the host institution with participants' curricula vitae and travel itineraries and will be available to offer guidance throughout the institute.

Proposal Contents: Applicant organizations should submit a complete and thorough proposal describing the program in a convincing and comprehensive manner. Since there is no opportunity for applicants to meet with reviewing officials, the proposal should respond to the criteria set forth in the solicitation and other guidelines as clearly as possible.

The proposal should address succinctly, but completely, the elements described below and must follow all format requirements. The proposal should include the following items:

TAB A—SF–424, ''Application for Federal Assistance''

TAB B—Executive Summary

In one double-space page, provide the following information about the project:

1. Name of organization/participating institutions
2. Beginning and ending dates of the program
3. Proposed theme
4. Nature of activity
5. Funding level requested from the Bureau, total program cost, total cost sharing from the applicant and other sources
6. Scope and goals: Include (a) the number and description of participants; (b) describe the wider audience benefiting from the program (overall impact); (c) geographic diversity of program, both in the U.S. and overseas; (d) fields covered; and (e) anticipated results (short and long term).

TAB C—Narrative and Calendar of Activities

In 20 pages provide a detailed description of the project addressing the areas listed below.

1. Vision (statement of need, objectives, goals, benefits)
2. Participating Organizations
3. Program Activities (orientation, intensive English, academic component, cultural program, participant monitoring)
4. Program Evaluation
5. Follow-on activities and visit to home work site(s) of selected participants
6. Project Management
7. Work Plan/Time Frame

Please refer to the Proposal Submission Instruction (PSI) document for technical format and instructions.

TAB D—Budget Submission

The cost to the Bureau for the Summer Institute for German Student Leaders in Education should not exceed $85,000. The budget should be developed for 10 participants.

Please see Section IV.3e and the Guidelines for Assistance Award Proposals and Budget Guidelines in Proposal Submission Instructions (PSI) in regard to a Summary Budget and a detailed Line-Item Budget. Use notes where further explanation of line items is required to clarify how the figures were derived.

TAB E—Letters of Endorsement and Resumés

Resumés of all program staff should be included in the submission. No resume should exceed two pages.

TAB F–SF–424B ''Assurances—Nonconstruction Programs''

First time applicant organizations and organizations which have not received an assistance award (grant or cooperative agreement) from the Bureau during the past three (3) years, must submit as an attachment to this form the following: (a) One copy of their Charter or Articles of Incorporation; (b) a list of the current Board of Directors: and (c) current financial statements.

Include other attachments, if applicable.

II. Award Information

Type of Award: Cooperative Agreement. ECA's level of involvement in this program is listed under number I above.

Fiscal Year Funds: 2006.

Approximate Total Funding: $85,000.

Approximate Number of Awards: 1.

Approximate Average Award: $85,000

Anticipated Award Date: Pending availability of funds, May 19, 2006.

Anticipated Project Completion Date: March 16, 2007.

Additional Information: Pending successful implementation of this program and the availability of funds in subsequent fiscal years, it is ECA's intent to renew this grant for two additional fiscal years, before openly competing it again.

III. Eligibility Information

III.1. Eligible Applicants

Applications may be submitted by public and private non-profit organizations meeting the provisions described in Internal Revenue Code section 26 U.S.C. 501(c)(3).

III.2. Cost Sharing or Matching Funds

There is no minimum or maximum percentage required for this competition. However, the Bureau encourages applicants to provide maximum levels of cost sharing and funding in support of its programs.

When cost sharing is offered, it is understood and agreed that the applicant must provide the amount of cost sharing as stipulated in its proposal and later included in an approved grant agreement. Cost sharing may be in the form of allowable direct or indirect costs. For accountability, you must maintain written records to support all costs that are claimed as your contribution, as well as costs to be paid by the Federal government. Such records are subject to audit. The basis for determining the value of cash and in-kind contributions must be in accordance with OMB Circular A–110 (Revised), Subpart C.23—Cost Sharing and Matching. In the event you do not provide the minimum amount of cost sharing as stipulated in the approved budget, ECA's contribution will be reduced in like proportion.

III.3. Other Eligibility Requirements

Bureau grant guidelines require that organizations with less than four years' experience in conducting international exchanges be limited to $60,000 in Bureau funding. ECA anticipates awarding one grant, in an amount up to $85,000 to support program and administrative costs required to implement this exchange program. Therefore, organizations with less than four years'-experience in conducting international exchanges are ineligible to apply under this competition.

IV. Application and Submission Information

Note: Please read the complete announcement before sending inquiries or submitting proposals. Once the RFGP deadline has passed, Bureau staff may not discuss this competition with applicants until the proposal review process has been completed.

IV.1. Contact Information To Request an Application Package

Please contact the Bureau of Educational and Cultural Affairs, Senior Program Manager Ilo-Mai Harding at Room 246, U.S. Department of State, SA–44, 301 4th Street, SW., Washington, DC 20547, Tel: (202) 453–8522; Fax: (202) 453–8520; or E-mail address: *hardingim@state.gov* to request a Solicitation Package. Please specify Ilo-Mai Harding and refer to the Funding Opportunity Number ECA/A/E/EUR–06–05 located at the top of this announcement when making your request.

Alternatively, an electronic application package may be obtained from www.grants.gov. Please see section IV.3f. for further information.

The Solicitation Package contains the Proposal Submission Instruction (PSI) document that consists of required application forms, and standard guidelines for proposal preparation.

It also contains the Project Objectives, Goals and Implementation (POGI) document, which provides specific information, award criteria and budget instructions tailored to this competition.

IV.2. To Download a Solicitation Package Via Internet

The entire Solicitation Package may be downloaded from the Bureau's website at *http://exchanges.state.gov/education/rfgps/menu.htm,* or from the

Grants.gov Web site at *http://www.grants.gov.*

Please read all information before downloading.

IV.3. Content and Form of Submission

Applicants must follow all instructions in the Solicitation Package. The application should be sent per the instructions under IV.3f. ''Application Deadline and Methods of Submission'' below.

IV.3a. You are required to have a Dun and Bradstreet Data Universal Numbering System (DUNS) number to apply for a grant or cooperative agreement from the U.S. Government. This number is a nine-digit identification number, which uniquely identifies business entities. Obtaining a DUNS number is easy and there is no charge. To obtain a DUNS number, access *http://www.dunandbradstreet.com* or call 1–866–705–5711. Please ensure that your DUNS number is included in the appropriate box of the SF–424 which is part of the formal application package.

IV.3b. All proposals must contain an executive summary, proposal narrative and budget.

Please Refer to the Solicitation Package. It contains the mandatory Proposal Submission Instructions (PSI) document for additional formatting and technical requirements.

IV.3c. You must have nonprofit status with the IRS at the time of application. If your organization is a private nonprofit which has not received a grant or cooperative agreement from ECA in the past three years, or if your organization received nonprofit status from the IRS within the past four years, you must submit the necessary documentation to verify nonprofit status as directed in the PSI document. Failure to do so will cause your proposal to be declared technically ineligible.

IV.3d. Please take into consideration the following information when preparing your proposal narrative:

IV.3d.1. *Adherence to All Regulations Governing the J Visa.* The Bureau of Educational and Cultural Affairs is placing renewed emphasis on the secure and proper administration of Exchange Visitor (J visa) Programs and adherence by grantees and sponsors to all regulations governing the J visa. Therefore, proposals should demonstrate the applicant's capacity to meet all requirements governing the administration of the Exchange Visitor Programs as set forth in 22 CFR Part 62, including the oversight of Responsible Officers and Alternate Responsible Officers, screening and selection of program participants, provision of pre-arrival information and orientation to participants, monitoring of participants, proper maintenance and security of forms, record-keeping, reporting and other requirements.

ECA will be responsible for issuing DS–2019 forms to participants in this program.

A copy of the complete regulations governing the administration of Exchange Visitor (J) programs is available at *http://exchanges.state.gov* or from: United States Department of State, Office of Exchange Coordination and Designation, ECA/EC/ECD–SA–44, Room 734, 301 4th Street, SW., Washington, DC 20547. Telephone: (202) 203–5029. FAX: (202) 453–8640.

Please refer to Solicitation Package for further information.

IV.3d.2. *Diversity, Freedom and Democracy Guidelines.* Pursuant to the Bureau's authorizing legislation, programs must maintain a non-political character and should be balanced and representative of the diversity of American political, social, and cultural life. ''Diversity'' should be interpreted in the broadest sense and encompass differences including, but not limited to ethnicity, race, gender, religion, geographic location, socio-economic status, and physical challenges. Applicants are strongly encouraged to adhere to the advancement of this principle both in program administration and in program content. Please refer to the review criteria under the ''Support for Diversity'' section for specific suggestions on incorporating diversity into your proposal. Public Law 104–319 provides that ''in carrying out programs of educational and cultural exchange in countries whose people do not fully enjoy freedom and democracy,'' the Bureau ''shall take appropriate steps to provide opportunities for participation in such programs to human rights and democracy leaders of such countries.'' Public Law 106–113 requires that the governments of the countries described above do not have inappropriate influence in the selection process. Proposals should reflect advancement of these goals in their program contents, to the full extent deemed feasible.

IV.3d.3. *Program Monitoring and Evaluation.* Proposals must include a plan to monitor and evaluate the project's success, both as the activities unfold and at the end of the program. The Bureau recommends that your proposal include a draft survey questionnaire or other technique plus a description of a methodology to use to link outcomes to original project objectives. The Bureau expects that the grantee will track participants or partners and be able to respond to key evaluation questions, including satisfaction with the program, learning as a result of the program, changes in behavior as a result of the program, and effects of the program on institutions (institutions in which participants work or partner institutions). The evaluation plan should include indicators that measure gains in mutual understanding as well as substantive knowledge.

Successful monitoring and evaluation depend heavily on setting clear goals and outcomes at the outset of a program. Your evaluation plan should include a description of your project's objectives, your anticipated project outcomes, and how and when you intend to measure these outcomes (performance indicators). The more that outcomes are ''smart'' (specific, measurable, attainable, results-oriented, and placed in a reasonable time frame), the easier it will be to conduct the evaluation. You should also show how your project objectives link to the goals of the program described in this RFGP.

Your monitoring and evaluation plan should clearly distinguish between program *outputs* and *outcomes. Outputs* are products and services delivered, often stated as an amount. Output information is important to show the scope or size of project activities, but it cannot substitute for information about progress towards outcomes or the results achieved. Examples of outputs include the number of people trained or the number of seminars conducted. *Outcomes,* in contrast, represent specific results a project is intended to achieve and is usually measured as an extent of change. Findings on outputs and outcomes should both be reported, but the focus should be on outcomes.

We encourage you to assess the following four levels of outcomes, as they relate to the program goals set out in the RFGP (listed here in increasing order of importance):

1. *Participant satisfaction* with the program and exchange experience.

2. *Participant learning,* such as increased knowledge, aptitude, skills, and changed understanding and attitude. Learning includes both substantive (subject-specific) learning and mutual understanding.

3. *Participant behavior,* concrete actions to apply knowledge in work or community; greater participation and responsibility in civic organizations; interpretation and explanation of experiences and new knowledge gained; continued contacts between participants, community members, and others.

4. *Institutional changes,* such as increased collaboration and

partnerships, policy reforms, new programming, and organizational improvements.

Please note: Consideration should be given to the appropriate timing of data collection for each level of outcome. For example, satisfaction is usually captured as a short-term outcome, whereas behavior and institutional changes are normally considered longer-term outcomes.

Overall, the quality of your monitoring and evaluation plan will be judged on how well it (1) specifies intended outcomes; (2) gives clear descriptions of how each outcome will be measured; (3) identifies when particular outcomes will be measured; and (4) provides a clear description of the data collection strategies for each outcome (i.e., surveys, interviews, or focus groups). (Please note that evaluation plans that deal only with the first level of outcomes [satisfaction] will be deemed less competitive under the present evaluation criteria.)

Grantees will be required to provide reports analyzing their evaluation findings to the Bureau in their regular program reports. All data collected, including survey responses and contact information, must be maintained for a minimum of three years and provided to the Bureau upon request.

IV.3d.4. *Describe your plans for overall program management, staffing and coordination with ECA/A/E/EUR.* ECA/A/E/EUR considers program management, staffing and coordination with the Department of State essential elements of your program. Please give sufficient attention to these elements in your proposal. Please refer to the Technical Eligibility Requirements in the Solicitation package for specific guidelines.

IV.3e. Please take the following information into consideration when preparing your budget:

IV.3e.1. Applicants must submit a comprehensive budget for the entire program. Awards may not exceed $85,000. There must be a summary budget as well as breakdowns reflecting both administrative and program budgets. Applicants may provide separate sub-budgets for each program component, phase, location, or activity to provide clarification. Proposals should try to maximize cost sharing in all facets of the program and to stimulate U.S. private sector, including foundation and corporate, support. Applicants must submit a comprehensive budget for the entire program. The Bureau reserves the right to reduce, revise, or increase proposal budgets in accordance with the needs of the program and availability of U.S. government funding.

IV.3e.2. Allowable costs for the program include the following:

1. Instructional costs (for example: instructors' salaries, honoraria for outside speakers, educational course materials);

2. Lodging, meals, and incidentals for participants;

3. Expenses associated with cultural activities planned for the group of participants (for example: tickets, transportation);

4. Administrative costs as necessary;

5. U.S. ground transportation costs to U.S. appointments, meetings and to/from airports. Please refer to the Solicitation Package for complete budget guidelines and formatting instructions.

IV.3e.3. Divide the line-item budget into *Program* and *Administration* sections. The line-item budget should include and elaborate on the categories listed below.

Program Costs: The applicant may choose to itemize academic program costs or set a fee per participant.

The following may be included as itemized instruction costs:

a. Honoraria and per diem for outside speakers, if any. List names and amounts.

b. Film and video rentals, educational materials, curricular needs (i.e. texts, course packs for classes) as needed.

If the applicant chooses to budget instruction costs as a fee per participant, please state what services are provided within that fee, and only actual costs incurred are chargeable to the award.

Clearly indicate the unit cost for each item listed below:

1. Lodging. Housing may be in graduate dormitories, faculty residence, or other, as appropriate. Single rooms preferred.

2. Meals. Meals may be provided through cash subsistence payments to participants, cafeteria meal plans, or a combination of both. If using a meal plan exclusively, show clearly how the cost of meals will be covered if participants travel away from campus or campus cafeterias are closed.

3. Incidentals allowance. Include an incidentals allowance of $10 per person per day for full number of days of the Summer Institute at the host institution.

4. Supplemental book allowance of $200 per person.

5. Return shipping allowance $150 per person.

6. Lodging, meals and incidentals allowances for participants who must arrive before the institute formally begins and/or depart after the institute formally ends, due to airline schedules in their home countries.

Note: Per Diem rate for lodging and meals may not exceed published U.S. government allowance rates for the site of the institute. Applicants may use per diem rates that are lower than official government rates.

Cultural activities and other program costs may include the following:

1. Cultural activities: Entrance fees, overnight lodging, and meals not previously listed.

2. Costs for cultural and educational tour: include participant lodging (double rooms are acceptable); meals for participants.

3. Transportation: Ground transportation for group cultural and educational activities; ground transportation for airport arrivals and departures. **Note**: The German Fulbright Commission will provide round-trip international air tickets (from the home country to the institute site and return to the home country) for participants. The cost of airline travel for participants should not be included in the budget.

4. Per diem (or lodging and subsistence) and travel for grantee escort staff for overnight cultural activities in the institute's home region. **Note**: Per Diem rate for lodging and meals may not exceed published U.S. government allowance rates for the site of the institute. Applicants may use per diem rates that are lower than official government rates.

5. Costs associated with post-institute implementation/evaluation site visit to Germany.

Administration Costs should include the following:

A. Staff requirements.

B. Benefits.

C. Other directly administrative expenses.

D. Indirect expenses.

Please review carefully the Guidelines for Assistance Award Proposals and Budget Guidelines in Proposal Submission Instructions (PSI) for descriptions and limitations for each type of administrative cost.

IV.3f. Application Deadline and Methods of Submission

Application Deadline Date: March 17, 2006.

Reference Number: ECA/A/E/EUR–06–05.

Methods of Submission: Applications may be submitted in one of two ways:

(1) In hard-copy, via a nationally recognized overnight delivery service (i.e., DHL, Federal Express, UPS, Airborne Express, or U.S. Postal Service Express Overnight Mail, etc.), or

(2) electronically through *http://www.grants.gov.*

Along with the Project Title, all applicants must enter the above

Reference Number in Box 11 on the SF–424 contained in the mandatory Proposal Submission Instructions (PSI) of the solicitation document.

IV.3f.1—Submitting Printed Applications

Applications must be shipped no later than the above deadline. Delivery services used by applicants must have in-place, centralized shipping identification and tracking systems that may be accessed via the Internet and delivery people who are identifiable by commonly recognized uniforms and delivery vehicles. Proposals shipped on or before the above deadline but received at ECA more than seven days after the deadline will be ineligible for further consideration under this competition. Proposals shipped after the established deadlines are ineligible for consideration under this competition. ECA will not notify you upon receipt of application. It is each applicant's responsibility to ensure that each package is marked with a legible tracking number and to monitor/confirm delivery to ECA via the Internet. Delivery of proposal packages may not be made via local courier service or in person for this competition. Faxed documents will not be accepted at any time. Only proposals submitted as stated above will be considered.

Applicants must follow all instructions in the Solicitation Package.

Important note: When preparing your submission please make sure to include one extra copy of the completed SF–424 form and place it in an envelope addressed to ''ECA/EX/PM''.

Applicants must follow all instructions in the Solicitation Package. The original and eight copies of the application should be sent to: U.S. Department of State, SA–44, Bureau of Educational and Cultural Affairs, Ref.: ECA/A/E/EUR–06–05, Program Management, ECA/EX/PM, Room 534, 301 4th Street, SW., Washington, DC 20547.

IV.3f.2—Submitting Electronic Applications

Applicants have the option of submitting proposals electronically through Grants.gov (*http://www.grants.gov*). Complete solicitation packages are available at Grants.gov in the ''Find'' portion of the system. Please follow the instructions available in the ''Get Started'' portion of the site (*http://www.grants.gov/GetStarted*).

Applicants have until midnight (12 a.m.) of the closing date to ensure that their entire applications have been uploaded to the grants.gov site. Applications uploaded to the site after midnight of the application deadline date will be automatically rejected by the grants.gov system, and will be technically ineligible.

Applicants will receive a confirmation e-mail from grants.gov upon the successful submission of an application. ECA will not notify you upon receipt of electronic applications.

IV.3g. *Intergovernmental Review of Applications:* Executive Order 12372 does not apply to this program.

V. Application Review Information

V.1. Review Process

The Bureau will review all proposals for technical eligibility. Proposals will be deemed ineligible if they do not fully adhere to the guidelines stated herein and in the Solicitation Package. All eligible proposals will be reviewed by the program office, as well as the Public Diplomacy section overseas, where appropriate. Eligible proposals will be subject to compliance with Federal and Bureau regulations and guidelines and forwarded to Bureau grant panels for advisory review. Proposals may also be reviewed by the Office of the Legal Adviser or by other Department elements. Final funding decisions are at the discretion of the Department of State's Assistant Secretary for Educational and Cultural Affairs. Final technical authority for assistance awards cooperative agreements resides with the Bureau's Grants Officer.

Review Criteria

Technically eligible applications will be competitively reviewed according to the criteria stated below. These criteria are not rank ordered and all carry equal weight in the proposal evaluation:

1. *Quality of the program conceptualization and planning:* Proposals should exhibit originality, substance, precision, and relevance to the Bureau's mission of mutual understanding as well as adherence to all guidelines, goals and objectives described in the RFGP. The proposal should demonstrate effective use of community and regional resources to enhance the cultural and educational experiences of the participants. A relevant work plan and detailed calendar should demonstrate substantive undertakings and logistical capacity.

2. *Institutional Capacity:* Proposed personnel and institutional resources should be adequate and appropriate to achieve a substantive academic program and effective cross-cultural communication with U.S. students. Proposals should demonstrate an institutional record of successful exchange programs, including responsible fiscal management and full compliance with all reporting requirements for past Bureau grants. The proposal should show evidence of strong on-site administrative capabilities with specific discussion of how logistical arrangements will be undertaken.

3. *Multiplier effect/impact:* Proposed programs should strengthen long-term mutual understanding, including maximum sharing of information and establishment of long-term institutional and individual linkages.

4. *Support of Diversity:* Proposals should demonstrate substantive support of the Bureau's policy on diversity. Program administrators should strive for diversity among institute staff, university students, the host community who interact with participants, and the cultural component of the program.

5. *Follow-on Activities:* Proposals should provide a plan for continued follow-on activity (without Bureau support) ensuring that Bureau supported programs are not isolated events.

6. *Project Evaluation:* Proposals should include a plan to evaluate the activity's success, both as the activities unfold and at the end of the program. A draft survey questionnaire or other technique plus description of a methodology to use to link outcomes to original project objectives are recommended.

7. *Cost-effectiveness:* The overhead and administrative components of the proposal, including salaries and honoraria, should be kept as low as possible. All other items should be necessary and appropriate.

8. *Cost-sharing:* Proposals should maximize cost sharing through other private sector support as well as institutional direct funding contributions.

VI. Award Administration Information

VI.1. Award Notices

Final awards cannot be made until funds have been appropriated by Congress, allocated and committed through internal Bureau procedures. Successful applicants will receive an Assistance Award Document (AAD) from the Bureau's Grants Office. The AAD and the original grant proposal with subsequent modifications (if applicable) shall be the only binding authorizing document between the recipient and the U.S. Government. The AAD will be signed by an authorized Grants Officer, and mailed to the

recipient's responsible officer identified in the application.

Unsuccessful applicants will receive notification of the results of the application review from the ECA program office coordinating this competition.

VI.2. Administrative and National Policy Requirements

Terms and Conditions for the Administration of ECA agreements include the following:

Office of Management and Budget Circular A–122, ''Cost Principles for Nonprofit Organizations.''

Office of Management and Budget Circular A–21, ''Cost Principles for Educational Institutions.''

OMB Circular A–87, ''Cost Principles for State, Local and Indian Governments''.

OMB Circular No. A–110 (Revised), Uniform Administrative Requirements for Grants and Agreements with Institutions of Higher Education, Hospitals, and other Nonprofit Organizations.

OMB Circular No. A–102, Uniform Administrative Requirements for Grants-in-Aid to State and Local Governments.

OMB Circular No. A–133, Audits of States, Local Government, and Non-profit Organizations.

Please reference the following websites for additional information: *http://www.whitehouse.gov/omb/grants., http://exchanges.state.gov/education/grantsdiv/terms.htm#articleI.*

VI.3. Reporting Requirements

You must provide ECA with a hard copy original plus two copies of a final program and financial report no more than 90 days after the expiration of the award.

Grantees will be required to provide reports analyzing their evaluation findings to the Bureau in their regular program reports. (Please refer to IV. Application and Submission Instructions (IV.3.d.3) above for Program Monitoring and Evaluation information.

All data collected, including survey responses and contact information, must be maintained for a minimum of three years and provided to the Bureau upon request.

All reports must be sent to the ECA Grants Officer and ECA Program Officer listed in the final assistance award document.

VI.4. Program Data Requirements

Organizations awarded grants will be required to maintain specific data on program participants and activities in an electronically accessible database format that can be shared with the Bureau as required. As a minimum, the data must include the following:

(1) Name, address, contact information and biographic sketch of all persons who travel internationally on funds provided by the grant or who benefit from the grant funding but do not travel.

(2) Itineraries of international and domestic travel, providing dates of travel and cities in which any exchange experiences take place. Final schedules for in country and U.S. activities must be received by the ECA Program Officer at least three workdays prior to the official opening of the activity.

VII. Agency Contacts

For questions about this announcement, contact: Ilo-Mai Harding, European and Eurasian Programs Branch, ECA/A/E/EUR, Room 246, ECA/A/E/EUR–06–05, U.S. Department of State, SA–44, 301 4th Street, SW., Washington, DC 20547, Tel: (202) 453–8522; Fax: (202) 453–8520; or E-mail address: *hardingim@state.gov.* All correspondence with the Bureau concerning this RFGP should reference the above title and number ECA/A/E/EUR–06–05.

Please read the complete **Federal Register** announcement before sending inquiries or submitting proposals. Once the RFGP deadline has passed, Bureau staff may not discuss this competition with applicants until the proposal review process has been completed.

VIII. Other Information

Notice

The terms and conditions published in this RFGP are binding and may not be modified by any Bureau representative. Explanatory information provided by the Bureau that contradicts published language will not be binding. Issuance of the RFGP does not constitute an award commitment on the part of the Government. The Bureau reserves the right to reduce, revise, or increase proposal budgets in accordance with the needs of the program and the availability of funds. Awards made will be subject to periodic reporting and evaluation requirements per section VI.3 above.

Dated: January 26, 2006.

C. Miller Crouch,

Principal Deputy Assistant Secretary, Bureau of Educational and Cultural Affairs, Department of State.

[FR Doc. E6–1414 Filed 2–1–06; 8:45 am]

BILLING CODE 4710–05–P

DEPARTMENT OF TRANSPORTATION

Office of the Secretary

Aviation Proceedings, Agreements Filed the Week Ending January 6, 2006

The following Agreements were filed with the Department of Transportation under the Sections 412 and 414 of the Federal Aviation Act, as amended (49 U.S.C. 1382 and 1384) and procedures governing proceedings to enforce these provisions. Answers may be filed within 21 days after the filing of the application.

Docket Number: OST–2006–23557.
Date Filed: January 6, 2006.
Parties: Members of the International Air Transport Association.
Subject: TC31 North and Central Pacific Bangkok, 24 October–1 November 2005,
TC31 North and Central Pacific, Korea (Rep. of), Malaysia—USA Resolutions.
Intended effective date: 1 April 2006 (Memo 0345), Minutes TC31/TC123 Passenger Tariff Coordinating Conference, Bangkok, 24 October–1 November 2005, TC31 North and Central Pacific Minutes (Memo 0349).

Docket Number: OST–2006–23568.
Date Filed: January 6, 2006.
Parties: Members of the International Air Transport Association.
Subject: TC31 Passenger Tariff Coordinating Conferences, Bangkok, 24 October–1 November 2005, TC31 North and Central Pacific Areawide Resolutions.
Intended effective date: 1 April 2006 (Memo 0334), Minutes TC31/TC123 Passenger Tariff Coordinating Conference, Bangkok, 24 October–1 November 2005, TC31 North and Central Pacific Minutes (Memo 0349).

Docket Number: OST–2006–23571.
Date Filed: January 6, 2006.
Parties: Members of the International Air Transport Association.
Subject: TC31 Circle Pacific, Bangkok, 24 October–1 November 2005, TC31 Circle Pacific.
Intended effective date: 1 April 2006 (Memo 0333), Minutes TC31/TC123 Passenger Tariff Coordinating Conference Bangkok, 24 October–1 November 2005, TC31 North and Central Pacific Minutes (Memo 0349).

Docket Number: OST–2006–23572.
Date Filed: January 6, 2006.
Parties: Members of the International Air Transport Association.
Subject: PTC2 Mail Vote 472, Special Amending Resolution 010d, From France to Europe.

Intended effective date: 15 January 2006 (Memo 0623).

Renee V. Wright,

Program Manager, Docket Operations, Federal Register Liaison.

[FR Doc. E6–1409 Filed 2–1–06; 8:45 am]

BILLING CODE 4910–62–P

DEPARTMENT OF TRANSPORTATION

Office of the Secretary

Aviation Proceedings, Agreements Filed the Week Ending January 13, 2005

The following Agreements were filed with the Department of Transportation under the Sections 412 and 414 of the Federal Aviation Act, as amended (49 U.S.C. 1382 and 1384) and procedures governing proceedings to enforce these provisions. Answers may be filed within 21 days after the filing of the application.

Docket Number: OST–2006–23601.
Date Filed: January 9, 2005.
Parties: Members of the International Air Transport Association.
Subject: TC3 South East Asia—South Asian Subcontinent. Singapore, 21 November–30 November 2005.
Intended effective date: 1 February 2006 (Memo 0914).

Docket Number: OST–2006–23606.
Date Filed: January 10, 2005.
Parties: Members of the International Air Transport Association.
Subject: TC31 Passenger Tariff Coordinating Conference, Bangkok, 24 October–1 November 2005, TC31 North and Central Pacific, TC3 (except Japan)—North America, Caribbean Resolutions (except between Korea (Rep. of), Malaysia–USA).
Intended effective date: 1 April 2006 (Memo 0347).
Fares: TC31 North and Central Pacific, TC3 (except Japan)—North America Caribbean Resolutions (except between Korea (Rep. of), Malaysia-USA) Specified fare tables.
Intended effective date: 1 April 2006 (Memo 0168).
Minutes: TC31/TC123 Passenger Tariff Coordination Conference, Bangkok, 24 October–1 November 2005, TC31 North and Central Pacific Minutes (Memo 0349).
Intended effective date: 1 April 2006.

Docket Number: OST–2006–23607.
Date Filed: January 10, 2006.
Parties: Members of the International Air Transport Association.
Subject: TC31 Passenger Tariff Coordinating Conference, Bangkok, 24 October–1 November 2005, TC31 North and Central Pacific, TC3—Central America, South America Resolutions (Memo 0344).
Fares: TC31 Passenger Tariff Coordinating Conference, Bangkok, 24 October–1 November 2005, TC31 North and Central Pacific, TC3—Central America, South America Resolutions.
Intended effective date: 1 April 2006 (Memo 0165).
Minutes: TC31/TC123 Passenger Tariff Coordination Conference, Bangkok, 24 October–1 November 2005, TC31 North and Central Pacific Minutes (Memo 0349).
Intended effective date: 1 April 2006.

Docket Number: OST–2006–23608.
Date Filed: January 10, 2005.
Parties: Members of the International Air Transport Association.
Subject: TC31 Passenger Tariff Coordinating Conference, Bangkok, 24 October–1 November 2005, TC31 North and Central Pacific, Japan—North America, Caribbean Resolutions.
Intended effective date: 1 April 2006 (Memo 0346).
Fares: TC31 Passenger Tariff Coordinating Conference, Bangkok, 24 October–1 November 2005, TC31 North and Central Pacific, Japan—North America, Caribbean Resolutions.
Intended effective date: 1 April 2006 (Memo 0167).
Minutes: TC31/TC123 Passenger Tariff Coordinating Conference, Bangkok, 24 October–1 November 2005, TC31 North and Central Pacific Minutes (Memo 0349), Technical Correction: TC31 North and Central Pacific, Japan—North America, Caribbean Resolutions, Bangkok, 24 October–1 November 2005 (Memo 0348 & Memo 0350), TC31 North and Central Pacific, Japan—North America, Caribbean Resolutions.
Fares: (Memo 0170).
Intended effective date: 1 April 2006.

Docket Number: OST–2006–23609.
Date Filed: January 10, 2005.
Parties: Members of the International Air Transport Association.
Subject: TC123 Passenger Tariff Coordinating Conference, Bangkok, 24 October–1 November 2005, TC123 South Atlantic Resolutions (Memo 0322).
Minutes: TC123 Passenger Tariff Coordinating Conference, Bangkok, 24 October–1 November 2005, TC123 South Atlantic Resolutions (Memo 0323).
Tables: TC123 Passenger Tariff Coordinating Conference, Bangkok, 24 October–1 November 2005, TC123 South Atlantic Resolutions (Memo 0130).
Intended effective date: 1 April 2006.

Docket Number: OST–2006–23610.
Date Filed: January 10, 2005.
Parties: Members of the International Air Transport Association.
Subject: TC3 Within South Asian Subcontinent, Singapore, 21 November–30 November 2005
Intended effective date: 15 January 2006 (Memo 0906).

Renee V. Wright,

Program Manager, Docket Operations, Federal Register Liaison.

[FR Doc. E6–1412 Filed 2–1–06; 8:45 am]

BILLING CODE 4910–62–P

DEPARTMENT OF TRANSPORTATION

Office of the Secretary

Notice of Applications for Certificates of Public Convenience and Necessity and Foreign Air Carrier Permits Filed Under Subpart B (Formerly Subpart Q) During the Week Ending January 6, 2006

The following Applications for Certificates of Public Convenience and Necessity and Foreign Air Carrier Permits were filed under Subpart B (formerly Subpart Q) of the Department of Transportation's Procedural Regulations (See 14 CFR 301.201 *et seq.*).

The due date for Answers, Conforming Applications, or Motions to Modify Scope are set forth below for each application. Following the Answer period DOT may process the application by expedited procedures. Such procedures may consist of the adoption of a show-cause order, a tentative order, or in appropriate cases a final order without further proceedings.

Docket Number: OST–2006–23543.
Date Filed: January 4, 2006.
Due Date for Answers, Conforming Applications, or Motion to Modify Scope: January 25, 2006.
Description: Application of Globespan Airways Limited d/b/a Flyglobespan, requesting a foreign air carrier permit in order to engage in (i) scheduled foreign air transportation of persons, property, and mail between any point or points in the United States and any point or points in the United Kingdom excluding London's Heathrow and Gatwick airports, and (ii) charter foreign air transportation of persons, property and mail pursuant to the U.S.-U.K. Air Services Agreement and Part 212 of the Department's Economic Regulations. Flyglobespan plans to commence

operations between the United Kingdom and the United States as early as May 1, 2006, providing scheduled combination service between Glasgow, Scotland and Orlando (Sanford), FL.

Renee V. Wright,

Program Manager, Docket Operations, Federal Register Liaison.

[FR Doc. E6–1411 Filed 2–1–06; 8:45 am]

BILLING CODE 4910–62–P

DEPARTMENT OF TRANSPORTATION

Office of the Secretary

Notice of Order Soliciting Community Proposals

AGENCY: Department of Transportation

ACTION: Notice of Order Soliciting Community Proposals (Order 2006–1–13) Docket OST–2006–23671.

SUMMARY: The Department of Transportation is soliciting proposals from communities or consortia of communities interested in receiving a grant under the Small Community Air Service Development Program. The full text of the Department's order is attached to this document. This year, there are two mandatory requirements for filing of applications, both of which must be completed for a community's application to be deemed timely and considered by the Department. The first requirement is the submission of the community's proposal to Dockets, as described below, the second requirement is the filing of SF424 through *http://www.grants.gov.*

DATES: Grant Proposals as well as the SF424 should be submitted no later than April 7, 2006.

ADDRESSES: Interested parties should submit an original and two copies of their proposals bearing the title ''Proposal under the Small Community Air Service Development Program, Docket OST–2006–23671, as well as the name of the applicant community or consortium of communities, the legal sponsor, and the applicant's DUNS number to Dockets Operations and Media Management, M–30, Room PL–401, Department of Transportation, 400 7th Street, SW., Washington, DC 20590. The SF424 is submitted electronically through *http://www.grants.gov.*

FOR FURTHER INFORMATION CONTACT: Aloha Ley, Office of Aviation Analysis, 400 7th Street, SW., Washington, DC 20590, (202) 366–2347.

Dated: January 20, 2005.

Michael W. Reynolds,

Acting Assistant Secretary for Aviation and International Affairs.

Issued by the Department of Transportation on the 20th day of January, 2006.

In the Matter of Grant Applications: Small Community Air Service Development Program; Under 49 U.S.C. 41743 et seq.

Order Soliciting Community Grant Proposals

Overview

By this order, the Department invites proposals from communities and/or consortia of communities interested in obtaining a federal grant under the Small Community Air Service Development Program (Small Community Program) to address air service and airfare problems in their communities. Proposals should be submitted in the above-referenced docket no later than April 7, 2006. Communities should be aware of a new application procedure which requires that applicants also submit form SF424, a standard federal government application form, in Grants.gov. An application will not be deemed complete until and unless all required documents are filed. (See Appendix C for additional information on filing form SF424.)

Funding Opportunity

The Small Community Program was established under the Wendell H. Ford Aviation Investment and Reform Act for the 21st Century (AIR–21), Public Law 106–181, as a three-year ''pilot'' program and was designed to provide financial assistance to small communities to help them enhance their air service. The Department provides this assistance in the form of financial grants. The program was not funded in its first year, fiscal year 2001, but was funded and implemented in each of fiscal years 2002 and 2003. The Vision 100-Century of Aviation Reauthorization Act, Public Law 108–176 (Vision 100), reauthorized the program for an additional five years, through fiscal year 2008, and eliminated the ''pilot'' status of the program. The program has been funded for FY 2004, FY 2005 and FY 2006.

Under the statute, the Secretary may award a maximum of 40 grants each year that the program is funded, although no more than four grants each year may be to communities in the same state.[1] The grants may be made to single communities or to consortia of communities.[2]

Communities that are eligible to participate in the grant program are those communities that are served by an airport that was not larger than a small hub airport for calendar year 1997 and had insufficient air service or unreasonably high airfares.[3] Communities that do not currently have commercial air service are also eligible, but where they seek grant funds to secure air service under the grant program they must have met or be able to meet in a reasonable period all necessary requirements of the Federal Aviation Administration for the type of service involved in their grant proposals.

In selecting communities to participate in the program, the statute directs the Secretary to give priority to those communities where: (a) Average air fares are higher than the air fares for all communities; (b) a portion of the cost of the activity proposed by the community is provided from local, *non-airport*-revenue resources; (c) a public-private partnership has been or will be established to facilitate air carrier service to the public; (d) improved service will bring the material benefits of scheduled air transportation to a broad section of the traveling public, including businesses, educational institutions, and other enterprises whose access to the National air transportation system is limited; and (e) the assistance will be used in a timely fashion.

The Small Community Program provides considerable flexibility in how funds can be used to implement a community's grant proposal. (See 49 U.S.C. 41743(d).) For example, grant funds can be used to cover the expenses of any new advertising or promotional activities related to improving the air service to the community. Funds may also be used for new studies designed to measure air service deficiencies, or to measure traffic loss or diversion to other communities. Another example would be using the funds for the employment or use of new, dedicated air service development staff on a long-term basis, advertising or public relations agencies, universities, and consulting firms. In addition, grant funds may also be used for financial incentives, including subsidy or revenue guarantees, to air carriers in conjunction with their

[1] See 49 U.S.C. 41743. A copy of the statute is provided in Appendix A.

[2] The statute specifies a consortium of communities should be considered as a single entity; therefore, throughout this order we use ''community'' to include consortia.

[3] A small hub is defined as an airport that has at least 0.05%, but less than 0.25%, of the annual passenger boardings in the United States.

provision of air service or the fare levels charged, or to ground service providers in providing access to air transportation services.[4] The use of grant funds for air carrier subsidy is limited to a maximum period of three years.

While the statute does not preclude communities from including capital expenditures, such as terminal/runway improvements or airport equipment in their grant requests, communities are encouraged not to do so. Because the Department generally receives many more applications than it can accommodate under the limitations of the statute and there are other government programs more suited and specifically designed for capital expenditures, the Department will treat such requests with lower priority. Applicants may pursue capital improvement projects separately in conjunction with their grant proposals under the Small Community Program.[5]

The statute also provides that the Department will designate one of the grant recipients as an Air Service Development Zone. Communities seeking to attract business to the area surrounding the airport and/or to develop land use options for the area as set forth in the statute are invited to compete for the designation. The Department will assist the designated community in establishing contacts with and obtaining advice and assistance from appropriate government agencies, including the Department of Commerce as well as other offices within the Department of Transportation, and in identifying other pertinent resources which may aid the community in its efforts to attract businesses and to formulate land use options for the airport vicinity. However, upon receiving the designation, it will be the responsibility of the community to develop, implement and manage activities related to the air service development zone initiative. There are no additional funds associated with this designation. Furthermore, communities seeking this designation will receive no special benefit or preference in receiving a grant under the Small Community Program.

Applicant communities interested in this designation should clearly indicate that interest in their applications and should provide detailed information in support of their selection for this designation in a *separate* section of their grant proposals. (See Application and Submission Section below, for more details on the application requirements for this designation.) Supporting information will include property and facilities available for the air service development zone, demographic information regarding the community and its environs, and the community's goals and preliminary plans for its air service/economic development initiatives.

In each of the years that the program has been funded, the Department received many more applications than could be accommodated under the limitations of the statute. In fiscal year 2002, the Department received 180 proposals and made 40 grant awards; in fiscal year 2003, the Department received 170 applications and made 36 grant awards; in fiscal year 2004, the Department received 108 applications and made 40 grant awards; and in fiscal year 2005, the Department received 84 applications and made 35 grant awards.[6]

Award Information

The Department of Transportation's budget appropriation for 2006 as set forth in the Transportation, Treasury, Housing and Urban Development, the Judiciary, the District of Columbia, and Independent Agencies Appropriations Act of 2006, Public Law 109–115, November 30, 2005, provides funding of up to $10 million for the program in fiscal year 2006.[7]

The financial assistance under this program is in the form of financial grants. As mentioned above, the statute limits the Department to a maximum of 40 grant awards (with a maximum of four grants per state) in each year that the program is funded. It does not prescribe any limits on the amounts of individual awards. The grant amounts awarded will vary depending upon the features and merits of the proposals selected. Over the past four years, the Department's individual grants have ranged from $20,000 to nearly $1.6 million.

The grant funds awarded do not need to be expended in the fiscal year that they are awarded. Nor do they need to be used within a one-year period. Authorized grant projects may include activities that extend over a multi-year period under a single grant award to the extent reasonable and practicable. Generally speaking, grant awards have not exceeded a three-to-four-year period.

Grant funds to the selected communities are available on a reimbursable basis under which the community expends funds related to implementation of the approved grant project, and then seeks reimbursement from the Department at regular intervals (usually monthly) for project expenditures under the terms set forth in the Grant Agreement between the Department and the selected community.

Eligibility Information

Applicant Eligibility

Communities that are eligible to participate in the grant program are those communities that are served by an airport that was not larger than a small hub airport for calendar year 1997 and had insufficient air service or unreasonably high airfares.[8] Communities that do not currently have commercial air service are also eligible, but where they seek grant funds to secure air service under the grant program, they must have met or be able to meet in a reasonable period all necessary requirements of the Federal Aviation Administration for the type of service involved in their grant proposals. Communities served by medium and large hubs are not eligible to apply under this program.

The law does not exclude small communities that currently receive subsidized air service under the Essential Air Service (EAS) program from seeking funds under the Small Community Program. A number of EAS-subsidized communities applied in past years and the Department has made grant awards to some of those applicants. When analyzing grant proposals, the Department will consider the fact that subsidized EAS communities are already receiving federal funding to support their air

[4] Qualified expenses are set forth in the Department's regulations, 14 CFR 18.22 and Office of Management and Budget Circular A–87. See *www.whitehouse.gov/omb/circulars/a0087/a0087.html.*

[5] Each applicant is responsible for assuring that no part of its proposal would, if accepted, violate any of the assurances associated with other federal grants, including, but not limited to, all Airport Improvement Program assurances regarding use of airport revenues.

[6] See Orders 2002–6–14 (June 26, 2002), 2002–12–16 (December 20, 2002) (both in Docket OST–2002–11590); Orders 2003–9–14 (September 17, 2003), 2003–9–25 (September 30, 2003) (both in Docket OST–2003–15065); Order 2004–8–30 (August 30, 2004) in Docket OST–2004–17343; and Order 2005–8–19 (August 25, 2005) in Docket OST–2005–20127 for a complete description of the Department's grant awards over the past four years.

[7] This funding is subject to a 1% across-the-board rescission. Furthermore, the program's funding for this year may be affected by a provision in Public Law 109–115 that provides the Secretary with authority to transfer funds from any program within or administered by the Office of the Secretary to the Essential Air Service (EAS) program if the EAS program does not have sufficient funds to meet its statutory obligations. In all previous years, the program has been funded at a level of $20 million per year. In some cases, that funding was also subject to a slight across-the-board rescission.

[8] The hub classifications are based on the Federal Aviation Administration's CY 1997 enplanement data.

services under the EAS program, and that Vision 100 made several substantive changes to the EAS program, including provision for an ''alternate'' EAS program that provides EAS-subsidized communities many of the same options for addressing their air service issues as those generally available under this program.[9] Furthermore, EAS-subsidized communities should be aware that we will not award grants to communities whose proposals are inconsistent with long-standing EAS policies, including proposals that contemplate air service to a second hub where such service is not now authorized under the community's EAS determination.

Communities that were awarded grants in previous years that want to apply for a grant this year should be aware that they are precluded from seeking funds for projects that have already received an award under the Small Community Program. However, previous grant recipients may submit grant proposals and seek funds for new projects in a different category. For example, if a community had received a grant for a market study, it could not apply for a new grant for another market study; however, the community could apply for funding for a revenue guarantee for new air service. That said, the funds for this program are very limited and the interest in the program has far exceeded both the funds available and the number of communities that can participate under the statute in any one year. The fact that a community has already received one or more grants will be a consideration when comparing its new proposal with those of other applicant communities.

Communities that propose to use the grant funds to support service in a city-pair market that is already served on a non-subsidized basis should be prepared to explain in detail why the existing service is insufficient or unsatisfactory, or provide other compelling information to support their proposal. This information is necessary for the Department to consider the competitive implications of subsidizing one carrier's service over service that is not subsidized. The Department is concerned that, while bringing new competition may benefit the community in the short term, a market may prove insufficient to support two carriers and service may deteriorate to the point that the community's service in the market is less beneficial than before. Thus, the Department may look skeptically at proposals that do not fully address these concerns.

The statute permits individual communities and consortia of communities to apply for grant awards under this program. In some instances in the past, several communities in a state have filed a single application as a ''consortium'' while in effect the application is a collection of individual community requests that involve different projects. We do not view this as a consortium. Rather, an application representing a consortium would be one that facilitates efforts of communities working together toward a joint grant project. For example, several communities surrounding an airport may apply together to improve air services at that airport.

The Department expects that communities will file only one application for a grant. In the past, some communities have filed both individual applications and requests as part of a consortium. In many cases these applications have involved the same project at the same or different funding levels. We will not consider the stand-alone application if a community is also submitting a largely identical request as part of a consortium. To the extent that a community files separately and as part of a consortium for complementary projects—for example, one request for funding a revenue guarantee and one for marketing—we will consider such proposals. Communities should be aware, however, that such multiple applications will not necessarily improve their chances for receiving a grant, and the Department cannot make multiple awards involving the same community in any one fiscal year.

Cost Sharing/Local Contributions

The statute does not require communities to contribute toward a grant project, although those that do contribute from local sources other than airport revenues are accorded priority consideration. One core objective of the Small Community Program is to promote community involvement in addressing air service/air fare issues through public/private partnerships. As a financial stakeholder in the process, the community gains greater control over the type, quality, and success of the air service initiatives that will best meet its needs, and demonstrates a greater commitment towards achieving the stated goals. The Department has historically received many more applications than can be accommodated and nearly all of those applications have proposed a community financial contribution to the project. Thus, proposals that do not propose a community financial contribution will be at a competitive disadvantage.

For those communities that propose to contribute to the grant project, that contribution can be in the following forms:

Cash from non-airport revenues: This cash contribution can include funds from the State, the County or the local government, and/or from local businesses, or other private organizations in the community. The ''value'' of donated advertising will not be considered a ''cash'' contribution.

Cash from airport revenues: This includes contributions from funds generated by airport operations. Such contributions do not accord priority consideration for selection and FAA policies preclude the use of airport revenues for revenue guarantees to airlines.

In-Kind Contributions from the airport: This can include such items as waivers of landing fees, terminal rents, fuel fees, and/or parking fees.

In-Kind Contributions from the community: This can include such items as donated advertising from media outlets, catering services for inaugural events, or in-kind trading, such as advertising in exchange for free air travel. Travel banks and travel commitments/pledges are regarded as an in-kind contribution. Similarly, reduced fares by airlines will be considered an in-kind contribution.

Only cash contributions will be eligible for reimbursement. ''In-kind'' contributions involve services or benefits that do not include a cash transaction between the parties. Because grant funding under the Small Community Program is provided on a *reimbursable basis*, the Department cannot reimburse the grant sponsor for ''in-kind'' or non-cash contributions. Therefore, in-kind contributions are not considered as part of the community's *cash* financial contribution to the project. Of course, communities are free to include in-kind contributions in their proposals. In fact, communities are encouraged to offer in-kind inducements as an *extra* incentive to facilitate air service/fare improvements. While these contributions will not be considered as part of the community's cash contribution toward the project on which reimbursements are made, they will be considered as illustrative of the community's overall commitment to the proposed grant project. If there is any question about whether a proposed contribution would be considered as

[9] Public Law 108–176, Sec. 405 amending 49 U.S.C. Section 41745. Pursuant to Vision 100, on July 27, 2004, the Department announced the ''Establishment of Alternate Essential Air Service Pilot Program'' and provided procedures for communities interested in participating in this component of the EAS program. See order in Docket OST–2004–18715.

''in-kind'' or cash, the applicant should contact the Department before submitting its proposal.

Contributions should represent a new financial commitment or new financial resources devoted to attracting new or improved service, or addressing specific high-fare or other service issues, such as improving patronage of existing service at the airport. Contributions from already-existing programs or projects (e.g., designating a portion of an airport's existing annual marketing budget to the project) are considered less favorably than contributions for new and innovative programs or projects.

Applicant communities should also note that, as part of the grant agreement between the Department and the community, the community must fulfill its proposed financial contribution to the project. Community participation with respect to all aspects of the proposal, including the financial aspects, is critical to the success of the authorized project initiative. As with the grant awards in past years, receipt of the full federal contribution awarded will thus be linked to the community's fulfillment of its financial contribution. Furthermore, communities cannot propose a certain level of cash contribution from non-airport sources, and subsequent to being awarded a grant, seek to substitute or replace that contribution with either ''in-kind'' contributions or contributions from airport revenues, or both. Given the statute's priority for contributions from *non-airport* sources and the competitive nature of the selection process, a community's grant award could be reduced or terminated altogether if it is unable to replace the committed funds from non-airport revenue sources.

Application and Submission Information

Types of Projects and Application Content

The statute is very general about the types of projects that can be authorized in order to provide communities as much flexibility as possible to address air service and airfare issues. Moreover, as each community's circumstances may be different, applicants will have some latitude in identifying their own objectives and developing strategies for accomplishing them. However, the purpose of this program is to provide additional financial support to improve air service at small communities. It is not intended to shift existing expenditures for this purpose from the local or state level to the federal level.

A core objective of the Small Community Program is to help communities secure enhancements that will be responsive to their air transportation/air fare needs on a long-term basis after the financial support of the grant has discontinued. There are many ways that a community might enhance its current air service or attract new service, such as: by promoting awareness among residents of locally available service; by attracting a new carrier through revenue guarantees or operating cost offsets: by offering an incumbent carrier financial incentives to lower its fares, increase its frequencies, add new routes, or deploy more suitable aircraft, including upgrading its equipment from turboprops to regional jets; by combining traffic support from surrounding communities with regionalized service through one airport; or by providing local ground transportation service to improve access to air service to the community and the surrounding area. These serve merely as illustrative examples and are not meant to comprise a list of the types of projects that are considered most favorably.

Consequently, communities are encouraged to be innovative and to consider a wide range of initiatives in developing their proposals. At the same time, general, vague, or unsupported proposals will be to be entertained. The more highly defined and focused the proposal, the more likely it will received favorable consideration, particularly given the statute's focus on a timely used of the federal grant funding. (48 U.S.C. 41743(c)(5)(E)).

At a minimum, proposals must provide the following information:

- *A description of the community's existing air service,* including the carrier(s) providing service, service frequency, direct and connection destination offered, available fares, and equipment types.
- *A synopsis of the community's historical service,* including destination, traffic levels, service providers, and any extenuating factors that might have affected traffic in the past or that can be expected to influence service needs in the near to intermediate terms.
- *A description of the community's air service needs or deficiencies,* including any major origin/destination markets not now served or not served adequately. In addition, communities are free to submit any information about their fare situation that they deem relevant to consideration of their grant request.
- *A strategic plan for meeting those needs under the Small Community Program,* including the community's specific project goal(s) and detailed plan for attaining the goal(s). Proposals should clearly identify the target audience of each component of the proposed transportation initiative, including all advertising and promotional efforts. Proposals should also provide a realistic timetable for implementation of the grant project. In this regard, the statute including timely use of the grant funds as a priority consideration. Consequently, communities must have a well-developed project plan and detailed timetable for implementing that plan. In establishing the timetable, however, communities should be realistic about their ability to meet their project deadlines.[10] Furthermore, proposals involving new or improved service should include self-sufficiency of the service as an integral part of the community's goal since, under the statute, they cannot seek grant funding in subsequent year in support of the same project. Therefore, it is important that communities seriously consider the scale of their proposed projects in developing their proposals and the timetable for achieving them. To the extent that a propoed project is dependent upon or relevant to completion of other federally funded capital improvement projects, the community should provide a description of, and the construction time-line for, those projects keeping in mind the new statutory requirement to use Small Community Program funding in a timely manner.

Further, when drafting a proposal, applicants should fully and clearly outline the goals and objectives sought to be achieved, *e.g.*, ''to broaden the awareness by residents in the Tri-County area of the operations provided by passenger carriers at the Tri-County airport,'' or ''to obtain new and affordable service to a hub airport in a direct where there is no such service.'' When an application is selected, these goals and objectives will be incorporated into the grant agreement and shape its basic scope. Once an agreement is signed, if circumstances change and an amendment is sought to allow for different activities or a different approach, the Department will

[10] The projected timetable will be an integral part of the grant agreements between the selected communities and the Department. Therefore, there is *no* advantage to a community in proposing an aggressive timetable that cannot be met, and there may be disadvantages if the community find that it cannot meet its timetable. Communities should carefully consider all factors affecting implementation of their projects and develop realistic timeframes for achieving those objectives, keeping in mind that authorized projects generally have not exceeded three to four years.

look to whether the change being sought is consistent with those fundamental project goals and objectives. Proposed changes that would alter those fundamental project goals and objectives cannot be authorized, because doing so would undermine the competitive nature of the selection process.

• *A description of any public-private partnership that will participate in the project.* Full community involvement is a key aspect of the Small Community Program. The statute gives a priority to those communities that already have established, or will establish, a public-private partnership to facilitate air service to the public. The proposal should give a full description of the public-private partnership that will participate in the community's proposal and how the partnership will actively participate in implementing the proposed project. In addition, applicants should identify each member of the partnership, the role that each will play, and its specific responsibilities in implementation of the project. If the application does not include specific information on the partnership participation in the project, the Department cannot evaluate how well a community has met this consideration, and the applicant will *not* be deemed as having met this priority consideration in the Department's evaluation of the community's proposal.

• *A detailed description of the funding necessary for implementation of the community's project, including the federal and non-federal contributions.* Proposal should clearly identify the level of federal funding sought. They should also clearly identify the other cash contributions toward the proposed project, ''in-kind'' contributions from the airport, and ''in-kind'' contributions from the community. Cash contributions from airport revenues should be identified separately from cash contributions from other community sources. Similarly, cash contributions from the state and/or local government should be separately identified and described.

In this regard, instances have arisen in the past where communities have relied extensively on what they characterize as travel banks for a significant portion of their local contribution. A travel ''bank'' involves an actual deposit of funds from the participating entities into a bank for the purpose of purchasing committed air travel on the selected airline and defined procedures for use of those funds under an agreement with the airline. Most often, however, what communities refer to as a travel ''bank'' in reality involves travel ''pledges'' from businesses in the community without any collection of funds or formal procedures for use of the funds. Despite having awarded several proposals contemplating ''travel banks,'' there are a few that have been implemented. Two communities that have established true travel banks are Redmond, Oregon, and Dubuque, Iowa. In the majority of cases, however, community discussions with air carriers have revealed that many carriers are not interested in travel banks or travel pledges/commitments, preferring other forms of financial incentives for risk abatement in the initial stages of their airline service. Therefore, if communities include travel banks in their proposals, they must also provide written confirmation that the potential transportation provider(s) involved in the project is interested in such a financial incentive. If such confirmation cannot be secured, the community should provide alternative funding proposals to address the carrier/financial incentive packages that may be needed. Further, if official travel banks are proposed, the Department will require documentation during the term of the grant that the travel banks are funded.

Applicant communities should be aware that, if awarded a grant, the Department will not reimburse the community for pre-award expenses such as the cost of preparing the grant application or for any expenses incurred prior to the community executing a grant agreement with the Department for implementation of the grant. In addition, 10 percent of the grant funds will be withheld until the Department receives the final report of the grant project. See Award Administration Information, below.

• *An explanation of how the community will ensure that its own funding contribution is spent in the manner proposed.*

• *Descriptions of how the community will monitor the progress of the grant project* and identify critical milestones during the life of the grant, including the need to modify or discontinue funding if identified milestones cannot be met. This is an important component of the community's proposal and serves to demonstrate the thoroughness of the community's planning of the proposed grant project. Applicant communities are on notice that any modifications must first be approved by the Department. Moreover, modifications to the project will be considered only to the extent that the changes do not deviate from the original goal and scope of the authorized grant project. As noted above, the Department will not permit fundamental changes to a community's proposal in order to preserve a grant award.

• *A description of how the community plans to continue with the project if it is not self-sustaining after the grant award expires.* A particular goal of the Small Community Program is to provide long-term, self-sustaining improvements to air service at small communities. Under the Vision 100 amendments to the statute, the community cannot seek further grant funding in support of the same project. It is possible that a new or improved service at a community will be well on its way to becoming self-sustaining, but will not have reached that goal when the grant has expired. Similarly, it is possible that extensive marketing and promotional efforts may be in process, but not completed, at the end of the grant period and will require continued support. Therefore, in developing its proposal, the community should carefully consider and describe its plans for continued financial support for the project after the grant funding is no longer available. This aspect of the application reflects on the community's commitment to the grant project and is an important component to the Department's consideration of the community's proposal for selection for a grant award.

• *A description of the community's air service development efforts over the past five years and the results of those efforts.* Many communities have been active on an on-going basis for many years in air service development efforts, while others are just beginning. To the extent that a community has previously engaged in other air service initiatives, including through public/private partnerships, it should describe those efforts and their results in its grant proposal. This should include marketing and promotional efforts of airport services as well as efforts to recruit additional or improved air service and airfare initiatives.

• *Designation of a legal sponsor responsible for administering the program.* The legal sponsor *must* be a government entity. If the applicant is a public-private partnership, a public government member of the organization must be identified as the community's sponsor to accept program reimbursements. In this regard, communities can designate only a single government entity as the legal sponsor, even if a consortium, for example, consists of two or more local government entities. Private organizations cannot be designated as

the legal sponsor of a grant under the Small Community Program.[11]

• *Air Service Development Zone Designation.* As noted earlier, the Department will designate one of the selected grant recipients as an Air Service Development Zone. The purpose of the designation is to provide communities interested in attracting business to the area surrounding the airport and/or developing land use options for the area to work with the Department on means to achieve those goals. Only communities that are interested in these objectives and have a plan to accomplishing them should compete for the available designation. Applying for this designation will provide no special benefit or preference to a community in receiving a grant award.

Against this background, grant applications interested in selection for the Air Service Development Zone designation, must include in their applications a separate section, titled, *Support for Air Service Development Zone Designation.* That section should include detailed information regarding the property and facilities available for development such as an existing airpark or land for such an airpark; the other modes of transportation that would be available to support additional economic development, such as rail, road, and/or water access; information concerning historic, existing, and any future business activity in the area that would support further development; demographic information concerning the community and its environs relevant to the developmental efforts, including population, employment, and per capita income data; and any other information that the community believes is relevant to its plans to enhance air service development. In this regard, the community should provide as detailed a plan as possible, including what goals it expects to achieve from the air service development zone designation and the types of activities on which it would like to work with the Department in achieving those goals. The community should also indicate whether further local government approvals are required in order to implement the proposed activities.

The Department will work with the selected grant recipient by reviewing its proposed goals and plans and will meet with the community to help direct the community's efforts to appropriate government agencies, including the Department of Commerce as well as other U.S. DOT offices that could provide further support and guidance for achieving the community's goals. The community and its leaders are in the best position to determine what activities will benefit its goals for greater air service development. The Department will serve as a liaison in helping the selected community connect directly with others that have the expertise and ability, including funding where the community meets the necessary requirements, to support the community's developmental activities.

There is no set format that applicants should use in submitting their applications, other than the guidance above concerning issues that must be addressed in community applications. The law provides considerable latitude to communities in developing their proposals and a strict format could serve to stifle innovation. However, given the historical high volume of applications received, applicants are required to submit a Summary Information Sheet (attached as Appendix B to this order) at the beginning of their applications and to complete the SF424 standard federal grant applications form (see Appendix C to this order) to assist our review of each proposal.

Filing Date/Confidential Material

Proposals are due April 7, 2006.[12] They may be submitted by hand, mail, or express delivery. Proposals postmarked after the due date will not be accepted. This year, there are two mandatory requirements for filing of applications, both of which must be completed for a community's application to be deemed timely and considered by the Department.

First, the applicant must submit a proposal that includes all of the information required by the Application and Submission section, above, including the Summary Sheet in Appendix B. The applications will be maintained in a public docket accessible by the general public and other applicants. Interested communities should submit an original and two copies of their proposals, including the Summary Information Sheet, if submitting their proposals by mail, hand, or express delivery.[13]

The cover page for all applications regardless of the method of submission should bear the title ''Proposal Under the Small Community Air Service Development Program,'' and should include the docket number as shown on the first page of this order, the name of the community or consortium of communities applying, the legal sponsor, and the community's Dun and Bradstreet (D&B) Data Universal Numbering System (DUNS) number. The application should be sent/delivered to Dockets Operations and Media Management, M–30, Room PL–401, Department of Transportation, 400 7th Street, SW., Washington, DC 20590. Questions regarding the program or the filing of proposals should be directed to the Office of Aviation Analysis, at (202) 366–1053 or *terri.bingham@dot.gov.*[14]

Applicants will be able to provide certain information relevant to their proposals on a confidential basis. Under the Department's regulations, such information is limited to commercial or financial information that, if disclosed, would either significantly harm the competitive position of a business or enterprise or make it more difficult for the Federal Government to obtain similar information in the future. Applicants seeking confidential treatment of a portion of their applications must segregate the confidential material in a sealed envelope marked ''Confidential Submission of X (the applicant) in Docket OST–2006–23671'' and include with that material a request in the form of a motion seeking confidential treatment of the material under 14 CFR 302.12 (Rule 12) of the Department's regulations. The applicant should submit an original and two copies of its motion and an original and two copies of the confidential material in the sealed envelope. The confidential material

[11] The community has the responsibility to ensure that the recipient of any funding has the legal authority under State and local laws to carry out all aspects of the grant.

[12] The original application should be submitted on 8.5″ x 11″ paper, in dark ink (not green) and without tabs to facilitate inclusion in the Department's docket management system. The remaining copies may be tabbed and include use of any color ink.

[13] Communities may submit their proposals electronically by following the instructions at the following Web site *http://dms.dot.gov.* If they do so, however, they should not also submit a hard copy of the application to the Dockets Operations and Media Management Office. However, communities using this option are required to submit one hard copy of their application to the Department's Office of Aviation Analysis, X–50, Room 6401, 400 7th Street, SW., Washington, DC 20590. Moreover, any additional materials such as DVDs and videos cannot be included in the docket management system. To the extent that communities want to include such information in their proposals, they should provide that information to the Department's Office of Aviation Analysis, X–50, Room 6401. Questions about electronic filing procedures should be addressed to Renee Wright, Dockets Operations and Media Management, at (202) 366–9826.

[14] To the extent that applicants are interested in reviewing proposals that were submitted in prior years, those applications are publicly available in Docket OST–2002–11590, Docket OST–2003–15065, Docket OST–2004–17343, and Docket OST–2005–20127 for FY 2002, 2003, 2004, and 2005 grants, respectively, through the Department's docket management system at the following Web address: *http://dms.dot.gov/.*

should *not* be included in the original or in any of the copies of the applicant's proposal that are submitted to the Department. Those submissions, however, should indicate clearly where the confidential material would have been inserted. If applicants invoke Rule 12, the confidential portion of the filing will be treated as confidential pending a final determination. All confidential material must also be received by April 7, 2006.

Second, in order to comply with this year's Grants.gov initiative, a mandate of the President's Management Agenda, all applicants must also submit form SF424, Application for Federal Domestic Assistance, found on *http://www.grants.gov.* In this regard, applicants should be aware that they must complete a one-time registration process in order to submit the SF424 application, and the registration process can take approximately three to five days to complete.

Therefore, communities intending to file applications should complete the registration process sooner rather than later to ensure that they can meet the application deadline. Appendix C provides additional information with respect to the registering process in Grants.gov as well as instructions on submitting SF424 once the registration process has been completed. As noted above, an application will not be deemed complete unless the proposal has been submitted to the Department's Docket Operations and Media Management office referencing the appropriate docket, an the SF424 application has been submitted through Grants.gov by the April 7 deadline.

Application Review Information

The Department will carefully review each proposal and the staff may contact applicants if clarification is needed. Communities may amend their proposals at any time prior to the Department's selection of grant recipients and those amendments will be considered to the extent the review process permits. The grant awards will be made as quickly as possible so that communities awarded grants can complete the grant agreement process and proceed to implement their plans. Pending unforeseen circumstances, this process should be completed before September 16, 2006.

The Small Community Program provides a valuable opportunity for communities to gain assistance in securing long-term, self-sustaining improvements in their air service. It is not intended to address short-term anomalies affecting a community's air service. Nor is it intended as a continuing financial support program for small community service.[15] It does represent an important opportunity for the community as a whole to take a creative approach to addressing its service and fare issues and to partner with the federal government to make meaningful and lasting improvements in its air service.

The statute directs the Department to give priority consideration to those communities or consortia where air fares are higher than the average air fares for all communities, the community or consortium will provide a portion of the cost of the activity from local sources other than airport revenues; the community or consortium has established or will establish a public-private partnership to facilitate air carrier service to the public; the assistance will provide material benefits to a broad segment of the traveling public whose access to the national air transportation system is limited; and the assistance will be used in a timely fashion.

Applications will be evaluated against these priority considerations. Given previous experience, it is likely that more applications will be received than can be funded under the limitations of the Small Community Program. With this in mind, consistent with the criteria stated above, the selection process will take into consideration such factors as the relative size of each applicant community; the geographic location of each applicant, including the community's proximity to larger centers of air service and low-fare service alternatives; the community's existing level of air service and whether that service has been increasing or decreasing, the number of passengers expected to benefit from the proposed transportation initiative, taking into consideration the historic and current demographic indicators for the community, including population growth, business activity, and per capita income data; the community's demonstrated commitment to and participation in the proposed grant project; the grant amount requested compared with total funds available for all communities; the proposed federal grant amount requested compared with the local share offered; whether the community has demonstrated a reasonable plan to use the funds in a timely manner; the uniqueness of applicants' claimed program(s); the uniqueness of the applicant's proposed solution(s) to solving the problem(s); whether the proposed project addresses the stated problem; and whether the community's proximity to an existing grant recipient could impact its proposal. Finally, we will consider whether the applicant community has previous received a grant award under this program.

Full community participation is a key goal of this program as demonstrated by the statute's focus on local contributions and active participation in the project. Therefore, applications that demonstrate broad community support will be given additional favorable consideration. For example, communities providing higher levels of cash contributions from other than airport revenues will also be accorded additional favorable consideration. Communities that provide multiple levels of contributions—cash and in-kind contributions—can also receive additional consideration. Similarly, communities that demonstrate historic and/or active participation in the proposed air service project will be accorded additional consideration.

Favorable consideration will also be given to those proposals that offer innovative solutions to the transportation issues facing the community. Small communities have faced many problems retaining and enhancing their air services and in dealing with their airfare issues. Therefore, proposals that offer new, creative approaches to addressing these problems, to the extent that they are reasonable, will be given additional favorable consideration. Proposals that provide a well-defined plan, a reasonable timetable for use of the grant funds, and a plan for continuation and/or monitoring of the project after the grant expires will also receive greater consideration.

Less favorable consideration will be accorded proposals that rely primarily on contributions from already-existing programs or projects (*e.g.,* designating a portion of an airport's existing annual marketing budget to the project), and proposals that would merely shift the costs of an ongoing or existing activity from the state or local level to the federal level. Contributions should represent a new financial commitment or new financial resources devoted to attracting new or improved service, or addressing specific high-fare or other service issues, such as improving patronage of existing services at the airport.

As a general matter, given prior experience, proposals that include travel banks, particularly if they serve as

[15] *See* 40 U.S.C. 41743(d)(1) which limits the use of grant funds to no longer than three years to support an air carrier's operations, and section 41743(c)(4) which precludes communities from seeking additional financial assistance for the same project.

the community's primary financial contribution to the project will be considered with greater scrutiny. As noted earlier, there is concern that such arrangements do not come to fruition and ultimately are not supported by the carriers. Often travel banks have involved ''pledges'' from the community to use the air service, rather than cash available for implementation of the project. Therefore, any proposals that include travel banks should also provide evidence of their acceptance by the selected or potential air or ground service providers. Moreover, the community should provide an alternative financial plan for the project in the event that the travel bank ultimately is not viable.

An important objective of the Small Community Program is to formulate and implement solutions to transportation problems of small communities which could serve as models for other small communities to improve and retain their access to air service and to the nation's air transportation system. We recognize that communities in different parts of the country do not necessarily face the same challenges with respect to their air services and airfares. Therefore, subject to the quality of the proposals submitted in meeting the evaluation criteria and the funding and overall community participation constraints of the program, to the extent possible, our goals will be to select proposals that will (a) benefit communities in all areas of the United States and its territories; (b) benefit small communities of all sizes, ranging from very small to those that qualify as small hubs and are eligible for participation in the program under the statute; [16] (c) promote regional solutions to air service issues, where appropriate; (d) include a variety of different types of projects; and (e) address different air service and/or airfare issues.

Given the competitive nature of the grant process, the Department does not intend to meet with grant applicants with respect to their grant proposals. The Department's selection of communities for grant awards will be based on the community's written submissions to the Department.

Award Administration Information

The Department will announce its grant selections by Order, which will be served on each grant recipient, all other applicants, and all parties served with this order. It will also be published in the **Federal Register** and posted on the Department's webpage.

Communities awarded grants will be expected to execute a grant agreement with the Department before they begin to spend funds under the grant award. Grant funds will be provided on a reimbursable basis only and only for expenses incurred and billed during the period that the grant agreement is in effect. Applicants therefore should not assume they have received a grant, nor obligate or spend local funds prior to receiving and fully executing a grant agreement with the Department under this program. Expenditures made prior to the execution of a grant agreement, including costs associated with preparation of the grant applicant, will not be reimbursed. Moreover, there are numerous assurances that are required to be made and honored when federal funds are awarded. All communities receiving a grant under the Small Community Program will be required to accept the responsibilities of these assurances, and to execute the assurances when they execute their grant agreements. Copies of the applicable assurances are available for review on the Department's webpage at *http://ostpxweb.dot.gov/aviation/X-50%20Role_files/smallcommunity.htm.*[17]

The grant agreements between the Department and selected communities will require quarterly reports on the progress of implementation of the grant project, as well as the submission on a quarterly or other time-specific basis of additional material relevant to the grant project, such as copies of advertising and promotional material, and copies of contracts with consultants and service providers. In addition, communities will be required to submit a final report to the Department with respect to their grant projects and 10 percent of the grant funds available will not be reimbursed to the community until the final report has been received. Communities will be permitted to seek reimbursement of project implementation costs on a regular basis. The frequency of such requests will be established in the grant agreement, which will be tailored to the specific features of the community's grant project. In most cases, reimbursements will be made on a monthly basis. In this regard, the Department will provide the grant recipient communities with details and procedures for securing reimbursements electronically.

This order is issued under authority delegated in 49 CFR 1.56a(f).

Accordingly,

1. Community proposals for funding under the Small Community Air Service Development Program should be submitted in Docket OST 2006–23671 no later than April 7, 2006; [18] and

2. This order will be published in the **Federal Register** and also will be served on the Conference of Mayors, the National League of Cities, the National Governors Association, the National Association of State Aviation Officials (NASAO), the Association of County Executives, the American Association of Airport Executives (AAAE), and the Airports Council International-North America (ACI), and posted on *http://www.grants.gov.*

By:

Michael W. Reynolds,

Acting Assistant Secretary for Aviation and International Affairs.

An electronic version of this document is available on the World Wide Web at *http://www.dms.dot.gov.*

Appendix A

Section 41743 Airports not Receiving Sufficient Service

(a) *Small community air service development program.* The Secretary of Transportation shall establish a program that meets the requirements of this section for improving air carrier service to airports not receiving sufficient air carrier service.

(b) *Application required.* In order to participate in the program established under subsection (a), a community or consortium of communities shall submit an application to the Secretary in such form, at such time, and containing such information as the Secretary may require, including—

(1) An assessment of the need of the community or consortium for access, or

[16] In this regard, we recognize that communities served by small hub airports generally have significant levels of service by a number of airlines, and thus, would not meet the ''insufficient service'' criteria of the statute. Therefore, absent evidence to the contrary, we would give more favorable consideration to proposals involving small hub airports where the community has demonstrated that its proposal meets the ''higher than average airfares'' requirement of the statute.

[17] The applicable regulations include, among others: (1) 49 CFR Parts 21 and 27 and 14 CFR Parts 271 and 382—Nondiscrimination in federally-assisted programs of the Department of Transportation—Effectuation of title VI of the Civil Rights Act of 1964; 49 CFR Part 27—Nondiscrimination on the basis of disability in programs and activities receiving or benefiting from Federal financial assistance; and 14 CFR Part 382—Nondiscrimination on the basis of disability in air travel; (2) 49 CFR Part 29—Government-wide debarment and suspension (non-procurement) and government-wide requirements for drug-free workplace (grants); and (3) 49 CFR Part 20—New restrictions on lobbying. The complete list of the applicable assurances is on the cited webpage. The assurances noted are for reference purposes only and should not be included in the community's application. The assurances are part of the grant agreement that will be sent to each grant recipient and should be completed at that time.

[18] Proposals must be postmarked no later than April 7, 2006. The original application should be submitted on 8.5″ x 11″ paper, in dark ink (not green) and without tabs to facilitate inclusion in the Department's docket management system. The remaining copies may be tabbed and include use of any color ink.

improved access, to the national air transportation system; and

(2) An analysis of the application of the criteria in subsection (c) to that community or consortium.

(c) *Criteria for participation.* In selecting communities, or consortia of communities, for participation in the program established under subsection (a), the Secretary shall apply the following criteria:

(1) *Size.* For calendar year 1997, the airport serving the community or consortium was not larger than a small hub airport, and—

(A) Had insufficient air carrier service; or

(B) Had unreasonably high air fares.

(2) *Characteristics.* The airport presents characteristics, such as geographic diversity or unique circumstances, that will demonstrate the need for, and feasibility of, the program established under subsection (a).

(3) *State Limit.* Not more than 4 communities or consortia of communities, or a combination thereof, from the same State may be selected to participate in the program in any fiscal year.

(4) *Overall limit.* No more than 40 communities or consortia of communities, or a combination thereof, may be selected to participate in the program in each year for which funds are appropriated for the program.

No community, consortia of communities, no combination thereof may participate in the program in support of the same project more than once, but any community, consortia of communities, or combination thereof may apply, subsequent to such participation, to participate in the program in support of a different project.

(5) *Priorities.* The Secretary shall give priority to communities or consortia of communities where—

(A) Air fares are higher than the average air fares for all communities;

(B) The community or consortium will provide a portion of the cost of the activity to be assisted under the program from local sources other than airport revenues;

(C) The community or consortium has established, or will establish, a public-private partnership to facilitate air carrier service to the public;

(D) The assistance will provide material benefits to a broad segment of the traveling public, including business, educational institutions, and other enterprises, whose access to the national air transportation system is limited; and

(E) The assistance will be used in a timely fashion.

(d) *Types of assistance.* The Secretary may use amounts made available under this section—

(1) To provide assistance to an air carrier to subsidize service to and from an underserved airport for a period not to exceed 3 years;

(2) To provide assistance to an underserved airport to obtain service to and from the underserved airport; and

(3) To provide assistance to an underserved airport to implement such other measures as the Secretary, in consultation with such airport, considers appropriate to improve air service both in terms of the cost of such service to consumers and the availability of such service, including improving air service through marketing and promotion of air service and enhanced utilization of airport facilities.

(e) *Authority to make agreements.* (1) *In general.* The Secretary may make agreements to provide assistance under this seciton.

(2) *Authorization of appropriations.* There is authorized to be appropriated to the Secretary $20,000,000 for fiscal year 2001, $27,500,000 for each of fiscal years 2002 and 2003, and $35,000,000 for each of fiscal years 2004 through 2008 to carry out this section. Such sums shall remain available until expended.

(f) *Additional action.* Under the program established under subsection (a), the Secretary shall work with air carriers providing service to participating communities and major air carriers (as defined in section 41716(a)(2)) serving large hub airports to facilitate joint-fare arrangements consistent with normal industry practice.

(g) *Designation of responsible official.* The Secretary shall designate an employee of the Department of Transportation—

(1) To function as a facilitator between small communities and air carriers;

(2) To carry out this section;

(3) To ensure that the Bureau of Transportation Statistics collects data on passenger information to assess the service needs of small communities;

(4) To work with the coordinate efforts with other Federal, State, and local agencies to increase the viability of service to small communities and the creation of aviation development zones; and

(5) To provide policy recommendations to the Secretary and Congress that will ensure that small communities have access to quality, affordable air transportation services.

(h) *Air Service Development Zone.* The Secretary shall designate an airport in the program as an Air Service Development Zone and work with the community or consortium on means to attract business to the area surrounding the airport, to develop land use options for the area, and provide data, working with the Department of Commerce and other agencies.

BILLING CODE 4910–62–M

SMALL COMMUNITY AIR SERVICE DEVELOPMENT PROGRAM
DOCKET OST-2006-23671

SUMMARY INFORMATION

All applicants must submit this information along with their proposal. In addition, applicants must also fill out form SF424 on http://www.grants.gov. (See Appendix C for the SF424 filing process)

A. APPLICANT INFORMATION: (CHECK ALL THAT APPLY)

☐ **Not a Consortium** ☐ **Interstate Consortium** ☐ **Intrastate Consortium**
☐ **Community now receives EAS subsidy**

B. PUBLIC/PRIVATE PARTNERSHIPS: (LIST ORGANIZATION NAMES)

Public	**Private**
1.	**1.**
2.	**2.**
3.	**3.**
4.	**4.**
5.	**5.**

C. PROJECT PROPOSAL: (CHECK ALL THAT APPLY)

☐ Marketing	☐ Upgrade Aircraft	☐ New Route
☐ Personnel	☐ Increase Frequency	☐ Low Fare Service
☐ Travel Bank	☐ Service Restoration	☐ Subsidy
☐ Surface Transportation	☐ Regional Service	☐ Other (specify)
☐ Revenue Guarantee	☐ Launch New Carrier	_____
☐ Start Up Cost Offset	☐ First Service	_____
☐ Study	☐ Secure Additional Carrier	_____

D. EXISTING LANDING AIDS AT LOCAL AIRPORT:

☐ Full ILS ☐ Outer/Middle Marker ☐ Published Instrument Approach

☐ Localizer ☐ Other (specify)

E. PROJECT COST:

Federal amount requested: _____
Total local cash financial contribution: _____
Airport funds: _____
Non-Airport funds: _____
State cash financial contribution: _____
Existing funds: _____
New funds: _____
Airport In-kind contribution: _____
(amount & description)
Other In-Kind contribution: _____
(amount & description)
Total cost of project: _____

F. ENPLANEMENTS:

2000 _____ 2003 _____

2001 _____ 2004 _____

2002 _____ 2005 _____

G. IS THIS APPLICATION SUBJECT TO REVIEW BY STATE UNDER EXECUTIVE ORDER 12372 PROCESS?

☐ a. This application was made available to the State under the Executive Order 12372 Process for review on (date) _____.
☐ b. Program is subject to E.O. 12372, but has not been selected by the State for review.
☐ c. Program is not covered by E.O. 12372.

H. IS THE APPLICANT DELINQUENT ON ANY FEDERAL DEBT? (IF "YES", PROVIDE EXPLANATION)

☐ No ☐ Yes (explain) _____

BILLING CODE 4910–62–C

Appendix C—Filing Form SF424—Application for Federal Domestic Assistance

Grants.gov, originally called the E-Grants Initiative, a mandate of the President's Management Agenda, states,

Agencies will allow applicants for Federal Grants to apply for and ultimately manage grant funds online through a common web site, simplyfing grants management and eliminating redundancies.

Public Law 106–107, the legislation that mandates streamlining and improved accountability for Federal grants, and related references in the President's Management Agenda, requires that Federal grant management activities be standardized. As a result, the Office of Management and Budget recently issued a policy directive requiring that all Federal agencies post grant opportunities online as of November 7, 2006.

Therefore, this year, to comply with the Grants.gov initiative, the Department will begin accepting grant applications via *http://www.grants.gov*. In order for an application to be considered in the Small Community Air Service Development Program, the community must submit its application of form SF424—Application for Federal Domestic Assistance—via *http://www.grants.gov*. Below are instructions on:

- How to FIND the SCASDP application online at *http://www.grants.gov*;
- How to register to submit applications; and
- How to APPLY or complete and submit the application form SF424.

Finding the SCASDP Grant Opportunity on Grants.Gov

Start your search for the Small Community Air Service Development Program grant opportunity by entering *http://www.grants.gov* and clicking the *Finding Grant Opportunities* tab at the top of the page. In the search box titled "Search for Catalog for Federal Domestic Assistance (CFDA) number" enter 20.930. You will see a summary of the SCASDP requirements.

Register To Submit Applications

Prior to applying, you must register to create a Grants.gov account and receive approval from your organization to submit applications. Detailed instructions on how to complete the registration is available at *http://www.grants.gov*.

1. *Register your Organization*

• Obtain a Data Universal Number System (DUNS) number
• Register the organization with a Central Contractor Registry (CCR)

2. *Register yourself as an Authorized Organization Representative (AOR)*
• Obtain a username and password
• Register with Grants.gov

3. *Get Authorized as an AOR by your Organization*
• Obtain E-Business Point of Contact authorization

Applying for the Grant

Once you have located the Small Community Air Service Development Program grant opportunity, you will need to enter the Funding Opportunity and/or the Catalog of Federal Domestic Application (CFDA) number 20.930 to access the application package and instructions online. However, you must complete the registration process before applying (see B above). In order to view the application package and instructions, you will also need to download and install the *PureEdge Viewer*.

1. *Download PureEdge Viewer* [Required]
2. *Download an Application Package*
3. *Complete an Application Package*
4. *Submit an Application Package*

Enter the SCASDP CFDA number (20.930) to download the application form SF424 and begin the process to apply for the grant through *http://www.grants.gov*. It is a 4-step process:

Apply Step 1: Download the Grant Application Form SF424 and Application Instructions

You will need to enter the Funding Opportunity and/or CFDA number to access the application package and instructions. Download and install the *PureEdge Viewer (available on http://www.grants.gov).* This small, free program will allow you to access, complete, and submit applications electronically and securely.

Apply Step 2: Complete the Selected Grant Application Package

You can complete the application offline—giving you the flexibility to complete grant applications when and where you want. It also enables you to easily route it through your organization for review, or completion of various components, just like any other email attachment.

Apply Step 3: Submit a Completed Grant Application Package

You will submit the application online. When you are ready to submit the completed application form SF424, you must have already completed the *Get Started* Steps. You will then need to log into *http://www.grants.gov* using the username and password you entered when you registered with a *Credential Provider* to submit the application.

Note: To submit electronic grant applications, you must be fully authorized by your organization, i.e., been given status as an *Authorized Organization Representative (AOR).* You can easily check your status by logging into *http://www.grants.gov* by accessing the *Applicant* link at the top of the screen. If you have registered your user name and password with Grants.gov, you will be able to log in. After logging in, access the 'Manage Profile' link. Your status, located below your title, will state: ''AOR—request sent'' or ''AOR—Approved''. If your status is 'AOR—request sent', you cannot yet submit grant applications. You may correct this by contacting your *E-Business Point of Contact (POC).* He or she will need to login by accessing the *Ebiz* link at the top of the screen. They will need your organization's DUNs number and MPIN, to approve you as an AOR.

Apply Step 4: Track the Status of a Completed Grant Application Package

Once you have submitted an application, you can check the status of your application submission. You can identify your application by CFDA Number, Funding Opportunity Number, Competition ID, and/or Grants.gov Tracking Number.

[FR Doc. 06–983 Filed 2–1–06; 8:45 am]

BILLING CODE 4910–62–M

DEPARTMENT OF TRANSPORTATION

Federal Highway Administration

Notice of Final Federal Agency Actions on Proposed Highway in Utah

AGENCY: Federal Highway Administration (FHWA), DOT; Army Corps of Engineers, DOD.

ACTION: Notice of Limitation on Claims for Judicial Review of Actions by FHWA, United States Army Corps of Engineers (USACE), DOD, and Other Federal Agencies.

SUMMARY: This notice announces actions taken by the FHWA, USACE, and other Federal agencies that are final within the meaning of 23 U.S.C. 139(l)(1). The actions relate to a proposed highway project, Legacy Parkway Project from Interstate 215 (I–215) in Salt Lake City north to U.S. Highway 89 (US–89) in Farmington, in the Counties of Salt Lake and Davis, State of Utah. Those actions grant licenses, permits, and approvals for this project.

DATES: By this notice, the FHWA is advising the public of final agency actions subject to 23 U.S.C. 139(l)(1). A claim seeking judicial review of the Federal agency actions on the highway project will be barred unless the claim is filed on or before August 1, 2006. If the Federal law that authorizes judicial review of a claim provides a time period of less than 180 days for filing such claim, then that shorter period still applies.

FOR FURTHER INFORMATION CONTACT: Gregory S. Punske, P.E., Environmental Program Manager, Federal Highway Administration, 2520 West 4700 South, Suite 9A, Salt Lake City, Utah 84118, Telephone: (801) 963–0182. The FHWA Utah Division Office's normal business hours are 7 a.m. to 4:30 p.m. (mountain time). You may also contact Mr. Shawn Zinszer, Chief Intermountain Regulatory Office, U.S. Army Corps of Engineers, 533 West 2600 South, Suite 150, Bountiful, Utah 84010 Telephone: (801) 295–8380 or, Mr. John Thomas, Director, Legacy Parkway Project, Utah Department of Transportation, 4001 South 700 East, Suite 450, Salt Lake City, UT 84107, Telephone, (801) 924–2070.

SUPPLEMENTARY INFORMATION: Notice is hereby given that the FHWA and other Federal agencies have taken final agency actions by issuing licenses, permits, and approvals for the following highway project in the State of Utah: The Legacy Parkway Project, a four-lane, limited-access, divided highway extending 14 miles from Interstate 215 (I–215) in Salt Lake City north to I–15 and U.S. Highway 89 (US–89) in Farmington; FHWA Reference Number: SP–0067(1)0. The primary purpose of the Legacy Parkway project is to help meet existing and projected travel demand through 2020 in the North Corridor by providing additional north-south transportation capacity. The North Corridor, located in Salt Lake and Davis Counties, Utah, is an area constrained by the Great Sale Lake to the west and the Wasatch Mountains to the east, and bounded by 400 South in Salt Lake City to the south and 200 North in Kaysville to the north. The actions by the Federal agencies, and the laws under which such actions were taken, are described in the Final Supplemental Environmental Impact Statement (FSEIS) for the project, approved on October 19, 2005, in the FWHA Record of Decision (ROD) issued on January 10, 2006, in the USACE of Engineers ROD issued on January 18, 2006, and in the Department of Army Permit Number 2003350493 effective on January 20, 2006, and in other documents in the FHWA and USACE administrative record. The FSEIS, RODs, and other documents in the FHWA and USACE administrative record are available upon written request from the FHWA or the Utah Department of Transportation at the addresses provided above. The FSEIS, the FHWA ROD, the USACE ROD and the Department of the Army Permit can be viewed and downloaded from the Utah Department of Transportation project Web site at: *http://udot.utah.gov/index.php/m=c/tid=181*]. The FSEIS can also be viewed at public libraries in the project area. Copies of the FHWA ROD and the USACE permit are available upon written request from

the FHWA or the Utah Department of Transportation at the addresses shown above.

This notices applies to all Federal agency decisions as of the issuance date of this notice and all laws under which such actions were taken, including but not limited to:

1. *General:* National Environmental Policy Act (NEPA) [42 USC 4321–4351]; Federal-Aid Highway Act [23 U.S.C. 109].

2. *Wetlands and Water Resources:* Clean Water Act, 33 U.S.C. 1251–1377 (Section 404, Section 401, Section 3190; Land and Water Conservation Fund (LWCF), 16 U.S.C. 4601–4604; TEA–21 Wetlands Mitigation, 23 U.S.C. 103(b)(6)(m), 133(b)(11).

3. *Air:* Clean Air Act, 42 U.S.C. 7401–7671(q).

4. *Land:* Section 4(f) of the Department of Transportation Act of 1966 [49 U.S.C. 303].

5. *Wildlife:* Endangered Species Act [16 U.S.C. 1531–1544 and Section 1536], Migratory Bird Treaty Act [16 U.S.C. 703–712].

6. *Historic and Cultural Resources:* Section 106 of the National Historic Preservation Act of 1966, as amended [16 U.S.C. 470(f) *et seq.*]; Archaeological Resources Protection Act of 1977 [16 U.S.C. 470(aa)–11]; Archaeological and Historic Preservation Act [16 U.S.C. 469–469(c)]; Native American Grave Protection and Repatriation Act (NAGPRA) [25 U.S.C. 3002–3013].

7. *Social and Economic:* Civil Rights Act of 1964 [42 U.S.C. 2000(d)–2000(d)(1)]; American Indian Religious Freedom Act [42 U.S.C. 1996]; Farmland Protection Policy Act (FPPA) [7 U.S.C. 4201–4209].

8. *Hazardous Materials:* Comprehensive Environmental Response, Compensation, and Liability Act (CERCLA), 42 U.S.C. 9601–9675; Superfund Amendments and Reauthorization Act of 1986 (SARA); Resource Conservation and Recovery Act (RCRA), 42 U.S.C. 6901–6992(k).

9. *Use of and Access to Interstate Highways;* Federal-Aid Highway Act (23 U.S.C. 111).

10. *Executive Orders:* E.O. 11990 Protection of Wetlands; E.O. 11988 Floodplain Management; E.O. 12898, Federal Actions to Address Environmental Justice in Minority Populations and Low Income Populations; E.O. 11593 Protection and Enhancement of Cultural Resources; E.O. 13007 Indian Sacred Sites; E.O. 13287 Preserve America; E.O. 13175 Consultation and Coordination with Indian Tribal Governments; E.O. 11514 Protection and Enhancement of Environmental Quality; E.O. 13112 Invasive Species.

(Catalog of Federal Domestic Assistance Program Number 20.205, Highway Planning and Construction. The regulations implementing Executive Order 12372 regarding intergovernmental consultation on Federal programs and activities apply to this program.)

Authority: 23 U.S.C. 139(l)(1).

Issued on: January 26, 2006.

Walter Waidelich,

Division Administrator, Salt Lake City, Utah.

[FR Doc. 06–956 Filed 2–1–06; 8:45 am]

BILLING CODE 4910–22–M

DEPARTMENT OF TRANSPORTATION

Federal Highway Administration

Safe, Accountable, Flexible, Efficient Transportation Equity Act: A Legacy for Users (SAFETEA–LU); Implementation Guidance

AGENCY: Federal Highway Administration (FHWA), Department of Transportation (DOT).

ACTION: Notice.

SUMMARY: The FHWA, to ensure widespread distribution of implementation guidance on the Safe, Accountable, Flexible, Efficient Transportation Equity Act: A Legacy for Users (SAFETEA–LU) (Pub. L. 109–59, 119 Stat. 1144), is announcing the availability of a Web site that contains SAFETEA–LU implementation guidance issued by the FHWA. The implementation guidance is available at the following URL: *http://www.fhwa.dot.gov/safetealu/reference.htm.* This Web site will serve as a consolidated location to obtain all SAFETEA–LU implementation guidance issued by the agency.

FOR FURTHER INFORMATION CONTACT: Ms. Carolyn Edwards, Office of Policy and Intergovernmental Affairs, (202) 366–1442, or Mr. Thomas Holian, Office of the Chief Counsel (HCC–10), (202) 366–0761, U.S. Department of Transportation, Federal Highway Administration, 400 Seventh St., SW., Washington, DC 20590. Office hours are from 7:45 a.m. to 4:15 p.m., e.t., Monday through Friday, except Federal holidays.

SUPPLEMENTARY INFORMATION:

Background

On August 10, 2005, the President signed into law the Safe, Accountable, Flexible, Efficient Transportation Equity Act: A Legacy for Users (SAFETEA–LU). Since that time, the FHWA has issued several guidance documents to provide stakeholders with a better idea of how to implement this statute. In an effort to ensure the widest dissemination possible, the FHWA has established a Web site that will serve as the consolidated source of all SAFETEA–LU implementation guidance issued by the FHWA. This Web site can be found at the following URL: *http://www.fhwa.dot.gov/safetealu/reference.htm.* It is the agency's intent to keep this Web site updated with all SAFETEA–LU implementation guidance as it is issued. The following is a list of some of the guidance documents available on this Web site:

1. Interim Guidance for Implementing Key SAFETEA–LU Provisions on Planning, Environment, and Air Quality for Joint FHWA/FTA Authorities;
2. Interim Guidance for Implementing SAFETEA–LU Provisions on Planning, Environment, and Air Quality for FHWA Authorities;
3. Surface Transportation Program (STP) Section 1113 of SAFETEA–LU—Implementing Guidance;
4. Public Lands Highways Discretionary (PLHD) Program—Implementing Guidance under SAFETEA–LU and Requests for FY 2006 Project Applications;
5. Ferry Boat Discretionary (FBD) Program—Request for FY 2006 Project Applications;
6. Interim Guidance on Use of 23 U.S.C. 139(l) Limitation on Claims Notice;
7. Guidance for Determining De Minimis Impacts to Section 4(f) Resources;
8. Transition and Implementation of SAFETEA–LU Planning Provisions: FHWA/FTA Clarifying Guidance on Implementation of SAFETEA–LU Planning Provisions;
9. Program Guidance: Safe Routes to School;
10. FHWA Guidance—Transportation Enhancements (with SAFETEA–LU updates); and
11. Guidance for Applying the 4(f) Exemption for the Interstate Highway System.

This list is not an exhaustive list of all the guidance currently on the Web site, and the FHWA will continue to issue SAFETEA–LU implementation guidance that will be made available on the Web site announced in this notice.

Conclusion

The FHWA will continue to place SAFETEA–LU implementation guidance documents on this Web site as it becomes available, and interested parties should continue to check this Web site for updates. The FHWA issues SAFETEA–LU implementation guidance to provide relevant information on

SAFETEA–LU implementation and intends this guidance to be nonbinding except insofar as it references existing statutory or regulatory requirements. This guidance should not be construed as rules of general applicability and legal effect or notices of proposed rulemaking.

Authority: 23 U.S.C. 315; 49 CFR 1.48.

Issued on: January 27, 2006.

J. Richard Capka,

Acting Federal Highway Administrator.

[FR Doc. E6–1388 Filed 2–1–06; 8:45 am]

BILLING CODE 4910–22–P

DEPARTMENT OF TRANSPORTATION

Federal Railroad Administration

[Docket Number FRA–2003–15432]

BNSF Railway Company; Notice of Public Hearing and Extension of Comment Period

The BNSF Railway Company has petitioned the Federal Railroad Administration (FRA) seeking approval to expand the existing waiver, granted on June 23, 2004, to include the area from Fort Worth, Texas, milepost 346.67, to Arkansas City, Kansas, milepost 264.11, on the Fort Worth and Red Rock Subdivisions, a distance of approximately 329 miles. This expansion request is identified as Docket No. FRA–2003–15432.

The FRA had issued a public notice seeking comments of interested parties. After examining the railroad's proposal and the comments received, FRA has determined that a public hearing is necessary before a final decision is made on this proposal. FRA is also extending the comment period to one week beyond the date of the public hearing. If information received at the public hearing warrants the need to extend the comment period even further, a separate notice will be published indicating such extension.

Accordingly, a public hearing is hereby set for 1 p.m. (Eastern Standard Time), on Thursday, February 23, 2006, at the Wyndham Hotel, Vista Ballroom C, 1400 M Street, NW., Washington, DC 20005. Interested parties are invited to present oral statements at the hearing. The hearing will be informal and will be conducted by a representative designated by the FRA, in accordance with Rule 25 of the FRA Rules of Practice (49 CFR part 211.25). The hearing will be a non-adversary proceeding and, therefore, there will be no cross-examination of persons presenting statements. The FRA representative will make an opening statement outlining the scope of the hearing. After all initial statements have been completed, those persons wishing to make brief rebuttal statements will be given the opportunity to do so in the same order in which they made their initial statements. Additional procedures, if necessary for the conduct of the hearing, will be announced at the hearing.

In addition, FRA is extending the comment period to March 2, 2006. All communications concerning these proceedings should identify the appropriate docket number (e.g., Waiver Petition Docket Number FRA–2003–15432) and must be submitted to the Docket Clerk, DOT Docket Management Facility, Room PL–401 (Plaza Level), 400 7th Street, SW., Washington, DC 20590. All written communications concerning these proceedings are available for examination during regular business hours (9 a.m.–5 p.m.) at the above facility. All documents in the public docket are also available for inspection and copying on the Internet at the docket facility's Web site at *http://dms.dot.gov.*

Anyone is able to search the electronic form of all comments received and entered into our dockets by the name of the individual submitting the comment (or signing the comment, if submitted on behalf of an association, business, labor union, etc.). You may review DOT's complete Privacy Act Statement in the **Federal Register** published on April 11, 2000, (Volume 65, Number 70; Pages 19477–78). The Statement may also be found at *http://dms.dot.gov.*

Issued in Washington, DC, on January 30, 2006.

Grady C. Cothen, Jr.,

Deputy Associate Administrator for Safety Standards and Program Development.

[FR Doc. E6–1425 Filed 2–1–06; 8:45 am]

BILLING CODE 4910–06–P

DEPARTMENT OF TRANSPORTATION

Federal Transit Administration

Over-the-Road Bus Accessibility Program Grants

AGENCY: Federal Transit Administration (FTA), DOT.

ACTION: Notice of Availability of Fiscal Year 2006 Funds: Solicitation of Grant Applications.

SUMMARY: The U.S. Department of Transportation (DOT) Federal Transit Administration (FTA) announces the availability of funds in fiscal year (FY) 2006 for the Over-the-Road Bus (OTRB) Accessibility Program, authorized by Section 3038 of the Transportation Equity Act for the 21st Century (TEA–21). The OTRB Accessibility Program makes funds available to private operators of over-the-road buses to finance the incremental capital and training costs of complying with DOT's over-the-road bus accessibility final rule, 49 CFR Part 37, published in a **Federal Register** notice on September 28, 1998 (63 FR 51670). The authorizing legislation calls for national solicitation of applications, with grantees to be selected on a competitive basis. Federal transit funds are available to intercity fixed-route providers and other OTRB providers at up to 90 percent of the project cost.

In FY 2006, following a one percent rescission, $5,568,750 was made available for intercity fixed-route service providers and $1,856,250 was made available for other over-the-road bus service providers.

This announcement is available on the Internet on the FTA Web site at: *http://www.fta.dot.gov*. FTA will announce final selections on the Web site and in the **Federal Register**. A synopsis of this announcement will be posted in the FIND module of the government-wide electronic grants Web site at *http://www.grants.gov*. Applications may be submitted to FTA in hard copy or electronically through the GRANTS.GOV APPLY function.

DATES: Complete applications for Over-the-Road Bus (OTRB) Program grants must be submitted to the appropriate FTA regional office (see Appendix C) by April 3, 2006, or submitted electronically through the *http://grants.gov* Web site by the same date. Anyone intending to apply electronically should initiate the process of registering on the *http://grants.gov* site immediately to ensure completion of registration before the deadline for submission. FTA will announce grant selections in the **Federal Register** when the competitive selection process is complete.

FOR FURTHER INFORMATION CONTACT: The appropriate FTA Regional Administrator (Appendix C) for application-specific information and issues. For general program information, contact Blenda Younger, Office of Transit Programs, (202) 366–2053, e-mail: *blenda.younger@fta.dot.gov*. A TDD is available at 1–800–877–8339 (TDD/FIRS).

Overview Information

Federal Agency Name: Department of Transportation, Federal Transit Administration (FTA).

Funding Opportunity Title: Capital and Training Assistance Program for Over-the-Road Bus Accessibility.

Announcement Type: Initial Announcement: Notice of Availability of Fiscal Year 2006 Funds: Solicitation of Grant Applications.

(Catalog of Federal Domestic Assistance (CFDA) Number: 20.518 Capital and Training Assistance Program for Over-the-Road Bus Accessibility.)

DATES: Complete applications for Over-the-Road Bus (OTRB) Program grants must be submitted to the appropriate FTA regional office (see Appendix C) by April 3, 2006, or submitted electronically through the *http://www.grants.gov* Web site by the same date.

Anyone intending to apply electronically should initiate the process of registering on the *http://grants.gov* site immediately to ensure completion of registration before the deadline for submission. FTA will announce grant selections when the competitive selection process is complete.

SUPPLEMENTARY INFORMATION:

Table of Contents

I. Funding Opportunity Description
II. Award Information
III. Eligibility Information
IV. Application and Submission Information
V. Application Review Information
VI. Award Administration Information
VII. Agency Contacts
Appendix A—Over-the-Road Bus Accessibility Program Application
Appendix B—Federal Fiscal Year 2006 Certifications and Assurances for the Federal Transit Administration Over-the-Road Bus Accessibility Grants
Appendix C—FTA Regional Offices

I. Funding Opportunity Description

A. Authority

The program is authorized under Section 3038 of the Transportation Equity Act for the 21st Century (TEA–21), Pub. L. 105–85 as amended by SAFETEA–LU, Pub. L. 109–059, August 10, 2005.

B. Background

Over-the-road buses are used in intercity fixed-route service as well as other services, such as commuter, charter, and tour bus services. These services are an important element of the U.S. transportation system. TEA–21 authorized FTA's Over-the-road Bus Accessibility Program to assist over-the-road bus operators in complying with the Department's Over-the-Road Bus Accessibility rule, ''Transportation for Individuals with Disabilities'' (49 CFR Part 37) published in a **Federal Register** notice on September 28, 1998 (63 FR 51670).

Summary of DOT's Over-the-Road Bus Accessibility Rule

Deadlines for Acquiring Accessible Vehicles. Under the over-the-road bus accessibility rule, all new buses obtained by large (Class I carriers, *i.e.*, those with gross annual operating revenues of $5.3 million or more), fixed-route carriers after October 30, 2000 must be accessible, with wheelchair lifts and tie-downs that allow passengers to ride in their own wheelchairs. The rule requires 50 percent of the fixed-route carriers' fleets to be accessible by 2006, and 100 percent of the vehicles in their fleets to be accessible by 2012. The buses acquired by small (gross operating revenues of less than $5.3 million annually) fixed-route providers after October 29, 2001 also are required to be lift-equipped, although they do not have a deadline for total fleet accessibility. Small providers also can provide equivalent service in lieu of obtaining accessible buses. Starting in 2001, charter and tour companies have to provide service in an accessible bus on 48 hours' advance notice. Fixed-route companies must also provide this kind of service on an interim basis until their fleets are completely accessible.

Deadlines for Delivering Accessible Service. The rules for delivering accessible motorcoach service went into effect October 29, 2001 for large fixed-route, charter, tour and other demand-responsive motorcoach companies. The rules went into effect for small operators on October 28, 2002. After these dates, companies must provide service in an accessible coach to a passenger who requests it and gives 48 hours' advance notice. Small companies may provide equivalent service, instead of acquiring accessible coaches. This equivalent service may be provided in an alternate vehicle (*e.g.*,a van), provided that the service allows passengers to travel in their own wheelchairs.

Specifications describing the design features that an over-the-road bus must have to be readily accessible to and usable by persons who use wheelchairs or other mobility aids required by the ''Americans with Disabilities Act Accessibility Guidelines for Transportation Vehicles: Over-the-Road Buses'' rule (36 CFR part 1192) were published in another **Federal Register** notice on September 28, 1998.

C. Purpose

Improving mobility and shaping America's future by ensuring that the transportation system is accessible, integrated, and efficient, and offers flexibility of choices is a key strategic goal of the Department of Transportation. Over-the-road Bus Accessibility projects will improve mobility for individuals with disabilities by providing financial assistance to help make vehicles accessible and training to ensure that drivers and others understand how to use accessibility features as well as how to treat patrons with disabilities.

D. Vehicle and Service Definitions

An ''over-the-road bus'' is a bus characterized by an elevated passenger deck located over a baggage compartment.

Intercity, fixed-route over-the-road bus service is regularly scheduled bus service for the general public, using an over-the-road bus that: operates with limited stops over fixed routes connecting two or more urban areas not in close proximity or connecting one or more rural communities with an urban area not in close proximity; has the capacity for transporting baggage carried by passengers; and makes meaningful connections with scheduled intercity bus service to more distant points. The application includes six factors that will be reviewed to determine eligibility for the portion of the funding limited to operators that qualify under this definition.

Other over-the-road bus service means any other transportation using over-the-road buses, including local fixed-route service, commuter service, and charter or tour service (including tour or excursion service that includes features in addition to bus transportation such as meals, lodging, admission to points of interest or special attractions). While some commuter service may also serve the needs of some intercity fixed-route passengers, the statute includes commuter service in the definition of ''other'' service. Commuter service providers should apply for these funds, even though the services designed to meet the needs of commuters may also provide service to intercity fixed-route passengers on an incidental basis. If a service provider can document that more than 50 percent of its passengers are using the service as intercity fixed-route service, the provider may apply for the funds designated for intercity fixed-route operators.

II. Award Information

Federal transit funds are available to intercity fixed-route providers and other OTRB providers at up to 90 percent of the project cost. In FY 2006, after a one percent rescission, $5,568,750 was made available for intercity fixed-route service providers and $1,856,250 was made

available for other over-the-road bus service providers. Successful applicants will be awarded grants. Typical grants under this program range from $25,000 to $180,000, with most grants being less than $40,000, for lift equipment for one bus.

III. Eligibility Information

1. Eligible Applicants

Grants will be made directly to operators of over-the-road buses. Intercity, fixed-route over-the-road bus service providers may apply for the $5,568,750 available to intercity fixed-route providers in FY 2006. Applicants must establish eligibility as intercity fixed-route providers by meeting established criteria on six factors identified in the application. Other over-the-road bus service providers, including operators of local fixed-route service, commuter service, and charter or tour service may apply for the $1,856,250 available in FY 2006 for these providers. OTRB operators who provide both intercity, fixed-route service and another type of service, such as commuter, charter or tour, may apply for both categories of funds with a single application. Private for-profit operators of over-the-road buses are eligible to be direct applicants for this program. This is a departure from most other FTA programs for which the direct applicant must be a state or local public body. FTA does not award grants to public bodies under this program.

Eligible Projects

Projects to finance the incremental capital and training costs of complying with DOT's over-the-road bus accessibility rule (49 CFR part 37) are eligible for funding. Incremental capital costs eligible for funding include adding lifts, tie-downs, moveable seats, doors and all labor costs associated with work on the vehicle needed to make vehicles accessible. Retrofitting vehicles with such accessibility components is also an eligible expense. Please see Buy America section for further determination of eligibility.

FTA may award funds for costs already incurred by the applicants. Any new wheelchair accessible vehicles delivered since June 8, 1998, the date that the Transportation Equity Act for the 21st Century was effective, are eligible for funding under the program. Vehicles of any age that have been retrofitted with lifts and other accessibility components since June 8, 1998 are also eligible for funding.

Eligible training costs are those required by the final accessibility rule as described in 49 CFR 37.209. These activities include training in proper operation and maintenance of accessibility features and equipment, boarding assistance, securement of mobility aids, sensitive and appropriate interaction with passengers with disabilities, and handling and storage of mobility devices. The costs associated with developing training materials or providing training for local providers of over-the-road bus services for these purposes are eligible expenses.

FTA will not fund the incremental costs of acquiring used wheelchair accessible OTRBs, as it may be impossible to verify whether or not FTA funds were already used to make the vehicles accessible. Also, it would be difficult to place a value on the accessibility features based upon the depreciated value of the vehicle. FTA wishes to increase the number of wheelchair accessible over-the-road buses available to persons with disabilities throughout the country, and the purchase of used accessible vehicles, whether or not they were previously funded by FTA, does not further this objective.

FTA has sponsored the development of accessibility training materials for public transit operators. FTA-funded Project Action is a national technical assistance program to promote cooperation between the disability community and the transportation industry. Project Action provides training, resources and technical assistance to thousands of disability organizations, consumers with disabilities, and transportation operators. It maintains a resource center with the most up-to-date information on transportation accessibility. Project Action may be contacted at: Project Action, 700 Thirteenth Street NW., Suite 200, Washington, DC 20590. Phone: 1–800–659–6428. Internet address: *http://www.projectaction.org/*.

2. Cost Sharing or Matching

Federal transit funds are available to intercity fixed-route providers and other OTRB providers at up to 90 percent of the project cost. A 10 percent match is required.

IV. Application and Submission Information

1. Address To Request Application Package

This announcement includes all of the information that you need to apply. It is available on the Internet on the FTA Web site at *http://www.fta.dot.gov*. FTA will announce final selections on the Web site and in the **Federal Register**. A synopsis of this announcement will be posted in the FIND module of the government-wide electronic grants Web site at *http://www.grants.gov*.

2. Content and Form of Application Submission

Guidelines for Preparing Grant Application

FTA is conducting a national solicitation for applications under the OTRB Accessibility program. Grant awards will be made on a competitive basis. The application should provide information on all items for which you are requesting funding in FY 2006. If you use another company's previous application as a guide, remember to modify all elements as appropriate to reflect your company's situation. The application must include a project narrative in the format provided in Appendix A, in addition to Standard Form 424, ''Application for Federal Assistance''.

Application Content

- Applicant Information

This addresses basic identifying information, including:

a. Company name.

b. Dun and Bradstreet (D&B) Data Universal Numbering System (DUNS) number.

c. Contact information for notification of project selection: Contact name, address, fax and phone number.

d. Description of services provided by company, including areas served.

e. For fixed-route carriers, whether you are a large (Class I, with gross annual operating revenues of $5.3 million or more) or small (gross operating revenues of less than $5.3 million annually) carrier.

f. Existing fleet and employee information, including number of over-the-road buses used for (1) intercity fixed-route service, and (2) other service, and number of employees.

g. If you provide both intercity fixed-route service and another type of service, such as commuter, charter or tour service, please provide an estimate of the proportion of your service that is intercity.

h. Description of your technical, legal, and financial capacity to implement the proposed project. Include evidence that you currently possess appropriate operating authority—*e.g.* DOT number if you operate interstate or identifier assigned by state if you do not operate interstate service.

- Project Information

Every application must:

a. Provide the Federal amount requested for each purpose for which

funds are sought in the format in Appendix A.

b. Document matching funds, including amount and source.

c. Describe project, including components to be funded, *i.e.*, lifts, tie-downs, moveable seats, etc., and/or training.

d. Provide project time-line, including significant milestones such as date or contract for purchase of vehicle(s), and actual or expected delivery date of vehicles.

e. Address each of the five statutory evaluation criteria described in V.

f. If requesting funding for intercity service, provide evidence that:

1. The applicant provides scheduled, intercity, fixed route, over-the-road bus service that interlines with one or more scheduled, intercity bus operators. (Such evidence includes applicant's membership in the National Bus Traffic Association or participation in separate interline agreements, and participation in interline tariffs or price lists issued by, or on behalf of, scheduled, intercity bus operators with whom the applicant interlines); and.

2. The applicant has obtained authority from the Federal Motor Carrier Safety Administration or the Interstate Commerce Commission to operate scheduled, intercity, fixed route service; and as many of the following as are applicable;

3. The applicant is included in Russell's Official National Motor Coach Guide showing that it provides regularly scheduled, fixed route over-the-road bus service with meaningful connections with scheduled intercity bus service to more distant points.

4. The applicant maintains a website showing routes and schedules of its regularly scheduled, fixed route over-the-road bus service and its meaningful connections to other scheduled, intercity bus service.

5. The applicant maintains published schedules showing its regularly scheduled, fixed route over-the-road bus service and its meaningful connections to other scheduled, intercity bus service.

6. The applicant participates in the International Registration Plan (IRP) apportionment program.

- Labor Information

a. Identify any labor organizations that may represent your employees and all labor organizations that represent the employees of any transit providers in the service area of the project. For each local of a nationally affiliated union, the applicant must provide the name of the national organization and the number or other designation of the local union. (*For example,* Amalgamated Transit Union local 1258.) Since DOL makes its referral to the national union's headquarters, there is no need to provide a means of contacting the local organization.

b. For each independent labor organization (*i.e.*, a union that is not affiliated with a national or international organization) the local information will be necessary (name of organization, address, contact person, phone, fax numbers).

c. Where a labor organization represents transit employees in the service area of the project, DOL must refer the proposed protective arrangements to each union and to each recipient. For this reason, please provide DOL with a contact person, address, telephone number and fax number for your company and associated union information.

3. Submission Dates and Times

Complete applications for OTRB Accessibility Program grants must be submitted to the appropriate FTA regional office (see Appendix C) April 3, 2006 or submitted electronically through the *http://grants.gov* Web site by the same date. Applicants planning to apply electronically are encouraged to begin the process of registration on the *http://grants.gov* site well in advance of the submission deadline. Registration is a multi-step process, which may take several weeks to complete before an application can be submitted. FTA will announce grant selections when the competitive selection process is complete.

4. Intergovernmental Review

This program is not generally subject to Executive Order (EO) 12372, ''Intergovernmental Review of Federal Programs.'' For more information, contact the State's Single Point of Contact (SPOC) to find out about and comply with the State's process under EO 12372. The names and addresses of the SPOCs are listed in the Office of Management and Budget's home page at *http://www.whitehouse.gov/omb/grants/spoc.html.*

5. Funding Restrictions

Only applications from eligible recipients for eligible activities will be considered for funding (*see* Section III). Due to funding limitations, applicants that are selected for funding may receive less than the amount requested.

6. Other Submission Requirements

Applicants should submit 3 copies of their project proposal application, consistent with the application format provided at Appendix A, to the appropriate regional office or apply electronically through the government wide electronic grant application portal at *http://www.grants.gov.*

V. Application Review Information

1. Project Evaluation Criteria

Projects will be evaluated according to the following criteria:

A. The identified need for over-the-road bus accessibility for persons with disabilities in the areas served by the applicant. (20 points)

B. The extent to which the applicant demonstrated innovative strategies and financial commitment to providing access to over-the-road buses to persons with disabilities. (20 points)

C. The extent to which the over-the-road bus operator acquired equipment required by DOT's over-the-road bus accessibility rule prior to the required time-frame in the rule. (20 points)

D. The extent to which financing the costs of complying with DOT's rule presents a financial hardship for the applicant. (20 points)

E. The impact of accessibility requirements on the continuation of over-the-road bus service with particular consideration of the impact of the requirements on service to rural areas and for low-income individuals. (20 points)

Note: These are the statutory criteria upon which funding decisions will be made. In addition to these criteria, FTA may also consider other factors, such as the size of the applicant's fleet and the level of FTA funding that may already have been awarded to applicants in prior years. Applicants will not be considered for funding as intercity fixed-route operators unless they satisfy at a minimum the first two criteria and at least one of criteria three through five listed in Project Information in the application content applicable to intercity fixed-route applicants.

2. Review and Selection Process

Each application is screened by a panel of members represented by FTA headquarters and regional staff. Incomplete or non-responsive applications will be disqualified. Intercity fixed-route service providers must provide evidence that they meet at a minimum the first two criteria and at least one of the next three criteria set forth in Project Information, if funds are requested under this category (*see* Appendix A, 2, B). Applicants that do not qualify as intercity-fixed route operators may be considered for funding in the ''other'' category. FTA will make an effort to award every qualified applicant at least one lift. Prior year funding under the program is a factor, however, so depending upon demand,

an applicant that received significant prior year funding may not be selected to receive additional funding.

VI. Award Administration Information

1. Award Notices

FTA will screen all applications to determine whether all required eligibility elements, as described in III. ''Eligibility Information'' are present. An FTA evaluation team will evaluate each application according to the criteria described in this announcement. FTA will notify all applicants, both those selected for funding and those not selected when the competitive selection process is complete. Projects selected for funding will be published in a **Federal Register** notice. Applicants selected for funding must then apply to the FTA regional office for the actual grant award, sign Certifications and Assurances, and execute a grant contract before funds can be drawn down.

2. Administrative and National Policy Requirements

A. Grant Requirements

Applicants selected for funding must include documentation necessary to meet the requirements of FTA's Nonurbanized Area Formula program (Section 5311 under Title 49, United States Code). Technical assistance regarding these requirements is available from each FTA regional office. The regional offices will contact those applicants selected for funding regarding procedures for making the required certifications and assurances to FTA before grants are made.

The authority for these requirements is provided by the Transportation Equity Act for the 21st Century, Pub. L. 105–178, June 9, 1998, as amended by the TEA–21 Restoration Act 105–206, 112 Stat. 685, July 22, 1998, 49 U.S.C. chapter 53, Title 23, United States Code, DOT and FTA regulations at 49 CFR, and FTA Circulars.

B. Buy America

In the OTRB Accessibility program, FTA's Buy America regulations, 49 CFR Part 661, apply to the incremental capital cost of making vehicles accessible. Those regulations do not apply to associated labor costs. The following discussion relates to the contract between the grantee and the prime contractor.

The ''General Requirements'' found at 49 CFR 661.5 apply to that portion of the accessibility system being funded. That section requires that all of the manufacturing processes for the product take place in the United States and that all components of the product be made in the United States. A component is considered domestic if it is manufactured in the U.S.A., regardless of the origin of its subcomponents. The lift, the moveable seats, and the securement devices will all be considered components for purposes of this program; accordingly, as components, each must be manufactured in the United States. Should a recipient choose to request funding for only a specific component, such as the lift or the securement device, then the Buy America requirements would apply only to that item funded by FTA.

Three exceptions to the general requirements can be found at 49 CFR 661.7: first, a waiver may be requested when the application of the regulation is not in the public interest; second, a waiver may be requested if the materials and products being procured are not produced in the United States in sufficient and reasonably available quantities and of a satisfactory quality; and third, a price differential waiver may be requested where the results of competitive procurement show that there is a 25 percent price difference between the domestic and foreign products. FTA approval of a waiver must be received by the recipient of FTA funds prior to the execution of contract.

It should also be noted that FTA has issued a general public interest waiver for all purchases under the Federal ''small purchase'' threshold, which is currently $100,000.

This waiver can be found in 49 CFR 661.7, Appendix A(e). In Section 3038(b) of TEA–21, Congress authorized FTA financing of the incremental capital costs of compliance with DOT's OTRB accessibility rule. Consistent with this provision, the small purchase waiver applies only to the incremental cost of the accessibility features FTA is funding. Where more than one bus is purchased, the grantee must consider the incremental cost increase for the entire procurement when determining if the small purchase waiver applies. For example, if $30,000 is the incremental cost for the accessibility features eligible under this program per bus (regardless of the Federal share contribution), then a procurement of three buses with a total such cost of $90,000, would qualify for the small purchase waiver. No special application to FTA would be required.

The grantee must obtain a certification from the bus manufacturer that all items included in the incremental cost for which the applicant is applying for funds meet Buy America requirements. The Buy America regulations can be found at *http://www.fta.dot.gov/library/legal/buyamer/.*

C. Labor Protection

Before FTA may award a grant for capital assistance, 49 U.S.C. 5333(b) requires that fair and equitable arrangements must be made to protect the interests of transit employees affected by FTA assistance. Those arrangements must be certified by the Secretary of Labor as meeting the requirements of the statute. When a labor organization represents a group of affected employees in the service area of an FTA project, the employee protective arrangement is usually the product of negotiations or discussions with the union. The grant applicant can facilitate Department of Labor (DOL) certification by identifying in the application any previously certified protective arrangements that have been applied to similar projects undertaken by the grant applicant, if any. Receiving funds under the OTRB Accessibility program, however, will not require the grantee's employees to be represented by organized labor. Nothing in the labor protection provisions in 49 U.S.C 5333(b) requires a motorcoach operator to become a union carrier or encourages union organizing in any manner. Upon receipt of a grant application requiring employee protective arrangements, FTA will transmit the application to DOL and request certification of the employee protective arrangements. In accordance with DOL guidelines, DOL notifies the relevant unions in the area of the project that a grant for assistance is pending and affords the grant applicant and union the opportunity to agree to an arrangement establishing the terms and conditions of the employee protections. If necessary, DOL furnishes technical and mediation assistance to the parties during their negotiations. The Secretary of Labor may determine the protections to be certified if the parties do not reach an agreement after good faith bargaining and mediation efforts have been exhausted. DOL will also set the protective conditions when affected employees in the service area are not represented by a union. When DOL determines that employee protective arrangements comply with labor protection requirements, DOL will provide a certification to FTA. The grant agreement between FTA and the grant applicant incorporates by reference the employee protective arrangements certified by DOL.

Applicants must identify any labor organizations that may represent their employees and all labor organizations that represent the employees of any

other transit providers in the service area of the project.

For each local of a nationally affiliated union, the applicant must provide the name of the national organization and the number or other designation of the local union. (*For example*, Amalgamated Transit Union local 1258) Since DOL makes its referral to the national union's headquarters, there is no need to provide a means of contacting the local organization.

However, for each independent labor organization (*i.e.*, a union that is not affiliated with a national or international organization) the local information will be necessary (name of organization, address, contact person, phone, fax numbers).

Where a labor organization represents transit employees in the service area of the project, DOL must refer the proposed protective arrangements to each union and to each recipient. For this reason, please provide DOL with a contact person, address, telephone number and fax number for your company, and associated union information.

DOL issued a **Federal Register** notice addressing the new TEA–21 programs, including the OTRB Accessibility Program, ''Amendment to Section 5333(b) Guidelines to Carry Out New Programs Authorized by the Transportation Equity Act for the 21st Century (TEA–21)''; Final Rule, dated July 28, 1999. FTA issued a ''Dear Colleague'' letter, dated December 5, 2000, addressing DOL processing of grant applications. Attached to the letter is an application checklist, which provides information that DOL must have in order to review and certify FTA grant applications. This letter and attachment can be found at: *http://www.fta.dot.gov/office/public/c0019.html.* Questions concerning protective arrangements and related matters pertaining to transit employees should be addressed to the Division of Statutory Programs, Department of Labor, 200 Constitution Avenue NW., Room N–5411, Washington, DC 20210; telephone (202) 693–0126, fax (202) 219–5338.

D. Planning

Applicants are encouraged to notify the appropriate state departments of transportation and metropolitan planning organizations (MPO) in areas likely to be served by equipment made accessible through funds made available in this program. Those organizations, in turn, should take appropriate steps to inform the public, and individuals requiring fully accessible services in particular, of operators' intentions to expand the accessibility of their services. Incorporation of funded projects in the plans and transportation improvement programs of states and metropolitan areas by states and MPOs also is encouraged, but is not required.

E. Standard Assurances

The Applicant assures that it will comply with all applicable Federal statutes, regulations, executive orders, FTA circulars, and other Federal administrative requirements in carrying out any project supported by the FTA grant. The Applicant acknowledges that it is under a continuing obligation to comply with the terms and conditions of the grant agreement issued for its project with FTA. The Applicant understands that Federal laws, regulations, policies, and administrative practices might be modified from time to time and affect the implementation of the project. The Applicant agrees that the most recent Federal requirements will apply to the project, unless FTA issues a written determination otherwise. The Applicant must submit the Certifications and Assurances for the FTA Over-the-Road Bus Accessibility Program found at Appendix B.

3. Reporting

Post-award reporting requirements include submission of final Financial Status Report and milestone report, or annual reports for grants remaining open at the end of each Federal fiscal year (September 30). Documentation is required for payment.

VII. Agency Contact(s)

Contact the appropriate FTA Regional Administrator (see Appendix C) for application-specific information and issues. For general program information, contact Blenda Younger, Office of Transit Programs, (202) 366–2053, e-mail: *blenda.younger@fta.dot.gov*. A TDD is available at 1–800–877–8339 (TDD/FIRS).

Issued on: January 27, 2006.

David B. Horner,

Chief Counsel.

Appendix A—Over-the-Road Bus Accessibility Program Project Proposal Application (Paper or Electronic Project Narrative)

(*See* Section IV.2 of **Federal Register** announcement for detailed explanation of application content).

In addition to OMB Standard Form 424, Application For Federal Assistance, provide the following information:

1. Applicant Information

A. Company Name:
B. DUNS Number:
C. For Notification of Project Selection Contact:
Name of Individual:
Address:
FAX:
Telephone number:
D. Describe Services Provided by Company, including Areas Served:
E. Intercity Fixed-Route Carriers:
____Large/Class I (gross annual operating revenues of $5.3 Million or more)
____Small (gross annual revenues of less than $5.3 Million)
F. Existing Fleet and Employee Information:
____Total number of over-the-road buses in fleet
____Number of over-the-road buses in fleet used for intercity fixed-route service
____Number of over-the-road buses intercity-fixed-route service that currently have lifts
____Number of over-the-road buses in fleet used for Other Service, *e.g.*, Charter, Tour, & Commuter
____Number of over-the-road buses used in ''other'' service that currently have lifts
____Number of Employees
G. Estimate of the proportion of service, if any, that is intercity fixed-route
____% of services is intercity fixed-route.
H. Describe your technical, legal, and financial capacity to implement the proposed project. Include evidence of operating authority.

2. Project Information

A. Federal Amount Requested (Up to 90% Federal Share):
Intercity Fixed Route Service:
$_____ for #_____ New Over-the-road Buses
$_____ for #_____ Retrofits
$_____ for #_____ Employees—Training

Other Service (Commuter, Charter, or Tour)
$_____ for #_____ New Over-the-road Buses
$_____ for #_____ Retrofits
$_____ for #_____ Employees—Training

B. If requesting funding for intercity service, provide evidence that:

1. The applicant provides scheduled, intercity, fixed route, over-the-road bus service that interlines with one or more scheduled, intercity bus operators. Such evidence includes applicant's membership in the National Bus Traffic Association or participation in separate interline agreements, and participation in interline tariffs or price lists issued by, or on behalf of, scheduled, intercity bus operators with whom the applicant interlines.

2. The applicant has obtained authority from the Federal Motor Carrier Safety Administration or the Interstate Commerce Commission to operate scheduled, intercity, fixed route service.

3. The applicant is included in Russell's Official National Motor Coach Guide showing that it provides regularly scheduled, fixed route over-the-road bus service with meaningful connections with scheduled intercity bus service to more distant points.

4. The applicant maintains a website showing routes and schedules of its regularly

scheduled, fixed route over-the-road bus service and its meaningful connections to other scheduled, intercity bus service.

5. The applicant maintains published schedules showing its regularly scheduled, fixed route over-the-road bus service and its meaningful connections to other scheduled, intercity bus service.

6. The applicant participates in the International Registration Plan (IRP) apportionment program.

C. Document Matching Funds, including Amount and Source.

D. Describe Project, including Components to be funded, *i.e.*, Lifts, Tie-downs, Moveable Seats, etc. and/or Training.

E. Provide Project Time Line, including Significant Milestones such as Date of Contract for Purchase of Vehicle(s), and actual or expected delivery date of vehicles.

F. Project Evaluation Criteria. Provide information addressing the following criteria:

- The identified need for over-the-road bus accessibility for persons with disabilities in the areas served by the applicant. (20 points)
- The extent to which the applicant demonstrated innovative strategies and financial commitment to providing access to over-the-road buses to persons with disabilities. (20 points)
- The extent to which the over-the-road bus operator acquired equipment required by DOT's over-the-road bus accessibility rule prior to the required time frame in the rule. (20 points)
- The extent to which financing the costs of complying with DOT's rule presents a financial hardship for the applicant. (20 points)
- The impact of accessibility requirements on the continuation of over-the-road bus service with particular consideration of the impact of the requirements on service to rural areas and for low income individuals. (20 points)

G. Labor Information

- List labor organizations that may represent your employees and all labor organizations that represent the employees of any transit providers in the service area of the project.
- For each local of a nationally affiliated union, provide the name of the national organization and the number or other designation of the local union.
- For each independent labor organization, provide the local information, including: name of organization, address, contact person, phone and fax numbers.
- For transit employee unions in service area of project, provide information including: contact person, address, telephone number and fax number for your company and associated union information.

Appendix B—Federal Fiscal Year 2006 Certifications and Assurances for the Federal Transit Administration Over-the-Road Bus Accessibility Grants

This list is a comprehensive compilation of the certifications and assurances required by Federal law for the OTRB Accessibility Grants. At the end of this list is a Signature Page on which the Applicant and its attorney certify compliance with all certifications and assurances applicable to the OTRB Accessibility Grants. All Applicants are advised to read the entire text of these certifications and assurances to be confident of their responsibilities and commitments.

If an Applicant has submitted the Federal Transit Administration's (FTA) standard comprehensive Federal Fiscal Year 2006 Certifications and Assurances for Federal Transit Administration Assistance Programs, the Applicant need not submit these certifications and assurances. This is because the Categories I and II of certifications and assurances below are identical, respectively, to Categories 01 and 02 of FTA's standard certifications and assurances for Fiscal Year 2006.

References: The Transportation Equity Act for the 21st Century, Pub. L. 105–178, June 9, 1998, as amended, 49 U.S.C. chapter 53, Title 23, U.S.C., U.S. DOT and FTA regulations at 49 CFR, joint U.S. Architectural and Transportation Barriers Compliance Board/U.S. DOT regulations at 36 CFR Part 1194, and FTA Circulars.

Category I. For Each Applicant

Each Applicant for FTA assistance must provide all assurances in this Category ''I.''

Unless FTA expressly determines otherwise in writing, FTA may not award any Federal assistance until the Applicant provides the following assurances by selecting Category ''I.''

A. Assurance of Authority of the Applicant and Its Representative

The authorized representative of the Applicant and the attorney who sign these certifications, assurances, and agreements affirm that both the Applicant and its authorized representative have adequate authority under applicable state and local law and the Applicant's by-laws or internal rules to:

(1) Execute and file the application for Federal assistance on behalf of the Applicant;

(2) Execute and file the required certifications, assurances, and agreements on behalf of the Applicant binding the Applicant; and

(3) Execute grant agreements and cooperative agreements with FTA on behalf of the Applicant.

B. Standard Assurances

The Applicant assures that it will comply with all applicable Federal statutes and regulations in carrying out any project supported by an FTA grant or cooperative agreement. The Applicant agrees that it is under a continuing obligation to comply with the terms and conditions of the grant agreement or cooperative agreement issued for its project with FTA. The Applicant recognizes that Federal laws and regulations may be modified from time to time and those modifications may affect project implementation.

The Applicant understands that Presidential executive orders and Federal directives, including Federal policies and program guidance may be issued concerning matters affecting the Applicant or its project. The Applicant agrees that the most recent Federal laws, regulations, and directives will apply to the project, unless FTA issues a written determination otherwise.

C. Intergovernmental Review Assurance

The Applicant assures that each application for Federal assistance it submits to FTA has been or will be submitted for intergovernmental review to the appropriate state and local agencies as determined by the state. Specifically, the Applicant assures that it has fulfilled or will fulfill the obligations imposed on FTA by U.S. Department of Transportation (U.S. DOT) regulations, ''Intergovernmental Review of Department of Transportation Programs and Activities,'' 49 CFR part 17.

D. Nondiscrimination Assurance

As required by 49 U.S.C. 5332 (which prohibits discrimination on the basis of race, color, creed, national origin, sex, or age, and prohibits discrimination in employment or business opportunity), by Title VI of the Civil Rights Act of 1964, as amended, 42 U.S.C. 2000d, and by U.S. DOT regulations, ''Nondiscrimination in Federally-Assisted Programs of the Department of Transportation—Effectuation of Title VI of the Civil Rights Act,'' 49 CFR part 21 at 21.7, the Applicant assures that it will comply with all requirements imposed by or issued pursuant to 49 U.S.C. 5332, 42 U.S.C. 2000d, and 49 CFR part 21, so that no person in the United States, on the basis of race, color, national origin, creed, sex, or age will be excluded from participation in, be denied the benefits of, or otherwise be subjected to discrimination in any program or activity (particularly in the level and quality of transportation services and transportation-related benefits) for which the Applicant receives Federal assistance awarded by the U.S. DOT or FTA.

Specifically, during the period in which Federal assistance is extended to the project, or project property is used for a purpose for which the Federal assistance is extended or for another purpose involving the provision of similar services or benefits, or as long as the Applicant retains ownership or possession of the project property, whichever is longer, the Applicant assures that:

(1) Each project will be conducted, property acquisitions will be undertaken, and project facilities will be operated in accordance with all applicable requirements imposed by or issued pursuant to 49 U.S.C. 5332, 42 U.S.C. 2000d, and 49 CFR part 21, and understands that this assurance extends to its entire facility and to facilities operated in connection with the project.

(2) It will promptly take the necessary actions to effectuate this assurance, including notifying the public that complaints of discrimination in the provision of transportation-related services or benefits may be filed with U.S. DOT or FTA. Upon request by U.S. DOT or FTA, the Applicant assures that it will submit the required information pertaining to its compliance with these provisions.

(3) It will include in each subagreement, property transfer agreement, third party contract, third party subcontract, or participation agreement adequate provisions to extend the requirements imposed by or

issued pursuant to 49 U.S.C. 5332, 42 U.S.C. 2000d and 49 CFR part 21 to other parties involved therein including any subrecipient, transferee, third party contractor, third party subcontractor at any level, successor in interest, or any other participant in the project.

(4) Should it transfer real property, structures, or improvements financed with Federal assistance provided by FTA to another party, any deeds and instruments recording the transfer of that property shall contain a covenant running with the land assuring nondiscrimination for the period during which the property is used for a purpose for which the Federal assistance is extended or for another purpose involving the provision of similar services or benefits.

(5) The United States has a right to seek judicial enforcement with regard to any matter arising under the Act, regulations, and this assurance.

(6) It will make any changes in its Title VI implementing procedures as U.S. DOT or FTA may request to achieve compliance with the requirements imposed by or issued pursuant to 49 U.S.C. 5332, 42 U.S.C. 2000d, and 49 CFR part 21.

E. Assurance of Nondiscrimination on the Basis of Disability

As required by U.S. DOT regulations, ''Nondiscrimination on the Basis of Handicap in Programs and Activities Receiving or Benefiting from Federal Financial Assistance,'' at 49 CFR 27.9, the Applicant assures that, as a condition to the approval or extension of any Federal assistance awarded by FTA to construct any facility, obtain any rolling stock or other equipment, undertake studies, conduct research, or to participate in or obtain any benefit from any program administered by FTA, no otherwise qualified person with a disability shall be, solely by reason of that disability, excluded from participation in, denied the benefits of, or otherwise subjected to discrimination in any program or activity receiving or benefiting from Federal assistance administered by the FTA or any entity within U.S. DOT. The Applicant assures that project implementation and operations so assisted will comply with all applicable requirements of U.S. DOT regulations implementing the Rehabilitation Act of 1973, as amended, 29 U.S.C. 794, *et seq.*, and the Americans with Disabilities Act of 1990, as amended, 42 U.S.C. 12101 *et seq.*, and implementing U.S. DOT regulations at 49 CFR parts 27, 37, and 38, and any other applicable Federal laws that may be enacted or Federal regulations that may be promulgated.

F. U.S. Office of Management and Budget (OMB) Assurances

Consistent with OMB assurances set forth in SF–424B and SF–424D, the Applicant assures that, with respect to itself or its project, the Applicant:

(1) Has the legal authority to apply for Federal assistance and the institutional, managerial, and financial capability (including funds sufficient to pay the non-Federal share of project cost) to ensure proper planning, management, and completion of the project described in its application;

(2) Will give FTA, the Comptroller General of the United States, and, if appropriate, the state, through any authorized representative, access to and the right to examine all records, books, papers, or documents related to the award; and will establish a proper accounting system in accordance with generally accepted accounting standards or agency directives;

(3) Will establish safeguards to prohibit employees from using their positions for a purpose that constitutes or presents the appearance of personal or organizational conflict of interest or personal gain;

(4) Will initiate and complete the work within the applicable project time periods following receipt of FTA approval;

(5) Will comply with all applicable Federal statutes relating to nondiscrimination including, but not limited to:

(a) Title VI of the Civil Rights Act, 42 U.S.C. 2000d, which prohibits discrimination on the basis of race, color, or national origin;

(b) Title IX of the Education Amendments of 1972, as amended, 20 U.S.C. 1681 through 1683, and 1685 through 1687, and U.S. DOT regulations, ''Nondiscrimination on the Basis of Sex in Education Programs or Activities Receiving Federal Financial Assistance,'' 49 CFR part 25, which prohibit discrimination on the basis of sex;

(c) Section 504 of the Rehabilitation Act of 1973, as amended, 29 U.S.C. 794, which prohibits discrimination on the basis of handicap;

(d) The Age Discrimination Act of 1975, as amended, 42 U.S.C. 6101 through 6107, which prohibits discrimination on the basis of age;

(e) The Drug Abuse Office and Treatment Act of 1972, Pub. L. 92–255, March 21, 1972, and amendments thereto, 21 U.S.C. 1174 *et seq.* relating to nondiscrimination on the basis of drug abuse;

(f) The Comprehensive Alcohol Abuse and Alcoholism Prevention Act of 1970, Pub. L. 91–616, Dec. 31, 1970, and amendments thereto, 42 U.S.C. 4581 *et seq.* relating to nondiscrimination on the basis of alcohol abuse or alcoholism;

(g) The Public Health Service Act of 1912, as amended, 42 U.S.C. 290dd–3 and 290ee–3, related to confidentiality of alcohol and drug abuse patient records;

(h) Title VIII of the Civil Rights Act, 42 U.S.C. 3601 *et seq.*, relating to nondiscrimination in the sale, rental, or financing of housing;

(i) Any other nondiscrimination provisions in the specific statutes under which Federal assistance for the project may be provided including, but not limited, to 49 U.S.C. 5332, which prohibits discrimination on the basis of race, color, creed, national origin, sex, or age, and prohibits discrimination in employment or business opportunity, and section 1101(b) of the Safe, Accountable, Flexible, Efficient Transportation Equity Act: A Legacy for Users (SAFETEA–LU), 23 U.S.C. 101 note, which provides for participation of disadvantaged business enterprises in FTA programs; and

(j) Any other nondiscrimination statute(s) that may apply to the project;

(6) To the extent applicable, will comply with, or has complied with, the requirements of Titles II and III of the Uniform Relocation Assistance and Real Property Acquisition Policies Act of 1970, as amended, (Uniform Relocation Act) 42 U.S.C. 4601 *et seq.*, which, among other things, provide for fair and equitable treatment of persons displaced or persons whose property is acquired as a result of Federal or federally assisted programs. These requirements apply to all interests in real property acquired for project purposes and displacement caused by the project regardless of Federal participation in any purchase. As required by sections 210 and 305 of the Uniform Relocation Act, 42 U.S.C. 4630 and 4655, and by U.S. DOT regulations, ''Uniform Relocation Assistance and Real Property Acquisition for Federal and Federally Assisted Programs,'' 49 CFR 24.4, the Applicant assures that it has the requisite authority under applicable state and local law to comply with the requirements of the Uniform Relocation Act, 42 U.S.C. 4601 *et seq.*, and U.S. DOT regulations, ''Uniform Relocation Assistance and Real Property Acquisition for Federal and Federally Assisted Programs,'' 49 CFR part 24, and will comply with that Act or has complied with that Act and those implementing regulations, including but not limited to the following:

(a) The Applicant will adequately inform each affected person of the benefits, policies, and procedures provided for in 49 CFR part 24;

(b) The Applicant will provide fair and reasonable relocation payments and assistance as required by 42 U.S.C. 4622, 4623, and 4624; 49 CFR part 24; and any applicable FTA procedures, to or for families, individuals, partnerships, corporations, or associations displaced as a result of any project financed with FTA assistance;

(c) The Applicant will provide relocation assistance programs offering the services described in 42 U.S.C. 4625 to such displaced families, individuals, partnerships, corporations, or associations in the manner provided in 49 CFR part 24;

(d) Within a reasonable time before displacement, the Applicant will make available comparable replacement dwellings to displaced families and individuals as required by 42 U.S.C. 4625(c)(3);

(e) The Applicant will carry out the relocation process in such manner as to provide displaced persons with uniform and consistent services, and will make available replacement housing in the same range of choices with respect to such housing to all displaced persons regardless of race, color, religion, or national origin;

(f) In acquiring real property, the Applicant will be guided to the greatest extent practicable under state law, by the real property acquisition policies of 42 U.S.C. 4651 and 4652;

(g) The Applicant will pay or reimburse property owners for necessary expenses as specified in 42 U.S.C. 4653 and 4654, with the understanding that FTA will provide Federal financial assistance for the Applicant's eligible costs of providing payments for those expenses, as required by 42 U.S.C. 4631;

(h) The Applicant will execute such amendments to third party contracts and subagreements financed with FTA assistance

and execute, furnish, and be bound by such additional documents as FTA may determine necessary to effectuate or implement the assurances provided herein; and

(i) The Applicant agrees to make these assurances part of or incorporate them by reference into any third party contract or subagreement, or any amendments thereto, relating to any project financed by FTA involving relocation or land acquisition and provide in any affected document that these relocation and land acquisition provisions shall supersede any conflicting provisions;

(7) To the extent applicable, will comply with the Davis-Bacon Act, as amended, 40 U.S.C. 3141 et seq., the Copeland ''Anti-Kickback'' Act, as amended, 18 U.S.C. 874, and the Contract Work Hours and Safety Standards Act, as amended, 40 U.S.C. 3701 et seq., regarding labor standards for federally assisted subagreements;

(8) To the extent applicable, will comply with the flood insurance purchase requirements of section 102(a) of the Flood Disaster Protection Act of 1973, as amended, 42 U.S.C. 4012a(a), requiring Applicants and their subrecipients s in a special flood hazard area to participate in the program and purchase flood insurance if the total cost of insurable construction and acquisition is $10,000 or more;

(9) To the extent applicable, will comply with the Lead-Based Paint Poisoning Prevention Act, 42 U.S.C. 4831(b), which prohibits the use of lead-based paint in the construction or rehabilitation of residence structures;

(10) To the extent applicable, will not dispose of, modify the use of, or change the terms of the real property title or other interest in the site and facilities on which a construction project supported with FTA assistance takes place without permission and instructions from FTA;

(11) To the extent required by FTA, will record the Federal interest in the title of real property, and will include a covenant in the title of real property acquired in whole or in part with Federal assistance funds to assure nondiscrimination during the useful life of the project;

(12) To the extent applicable, will comply with FTA provisions concerning the drafting, review, and approval of construction plans and specifications of any construction project supported with FTA assistance. As required by U.S. DOT regulations, ''Seismic Safety,'' 49 CFR 41.117(d), before accepting delivery of any building financed with FTA assistance, it will obtain a certificate of compliance with the seismic design and construction requirements of 49 CFR part 41;

(13) To the extent applicable, will provide and maintain competent and adequate engineering supervision at the construction site of any project supported with FTA assistance to ensure that the complete work conforms with the approved plans and specifications, and will furnish progress reports and such other information as may be required by FTA or the state;

(14) To the extent applicable, will comply with any applicable environmental standards that may be prescribed to implement the following Federal laws and executive orders:

(a) Institution of environmental quality control measures under the National Environmental Policy Act of 1969, as amended, 42 U.S.C. 4321 through 4335 and Executive Order No. 11514, as amended, 42 U.S.C. 4321 *note*;

(b) Notification of violating facilities pursuant to Executive Order No. 11738, 42 U.S.C. 7606 *note*;

(c) Protection of wetlands pursuant to Executive Order No. 11990, 42 U.S.C. 4321 *note*;

(d) Evaluation of flood hazards in floodplains in accordance with Executive Order No. 11988, 42 U.S.C. 4321 *note*;

(e) Assurance of project consistency with the approved state management program developed pursuant to the requirements of the Coastal Zone Management Act of 1972, as amended, 16 U.S.C. 1451 through 1465;

(f) Conformity of Federal actions to State (Clean Air) Implementation Plans under section 176(c) of the Clean Air Act of 1955, as amended, 42 U.S.C. 7401 through 7671q;

(g) Protection of underground sources of drinking water under the Safe Drinking Water Act of 1974, as amended, 42 U.S.C. 300f through 300j–6;

(h) Protection of endangered species under the Endangered Species Act of 1973, as amended, 16 U.S.C. 1531 through 1544; and

(i) Environmental protections for Federal transportation programs, including, but not limited to, protections for parks, recreation areas, or wildlife or waterfowl refuges of national, state, or local significance or any land from a historic site of national, state, or local significance to be used in a transportation project as required by 49 U.S.C. 303(b) and 303(c);

(j) Protection of the components of the national wild and scenic rivers systems, as required under the Wild and Scenic Rivers Act of 1968, as amended, 16 U.S.C. 1271 through 1287; and

(k) Provision of assistance to FTA in complying with section 106 of the National Historic Preservation Act of 1966, as amended, 16 U.S.C. 470f; with the Archaeological and Historic Preservation Act of 1974, as amended, 16 U.S.C. 469 through 469c; and with Executive Order No. 11593 (identification and protection of historic properties), 16 U.S.C. 470 *note*;

(15) To the extent applicable, will comply with the requirements of the Hatch Act, 5 U.S.C. 1501 through 1508 and 7324 through 7326, which limit the political activities of state and local agencies and their officers and employees whose primary employment activities are financed in whole or part with Federal funds including a Federal loan, grant agreement, or cooperative agreement except, in accordance with 49 U.S.C. 5307(k)(2) and 23 U.S.C. 142(g), the Hatch Act does not apply to a nonsupervisory employee of a public transportation system (or of any other agency or entity performing related functions) receiving FTA assistance to whom that Act does not otherwise apply;

(16) To the extent applicable, will comply with the National Research Act, Pub. L. 93–348, July 12, 1974, as amended, 42 U.S.C. 289 *et seq.*, and U.S. DOT regulations, ''Protection of Human Subjects,'' 49 CFR part 11, regarding the protection of human subjects involved in research, development, and related activities supported by Federal assistance;

(17) To the extent applicable, will comply with the Laboratory Animal Welfare Act of 1966, as amended, 7 U.S.C. 2131 *et seq.*, and U.S. Department of Agriculture regulations, ''Animal Welfare,'' 9 CFR subchapter A, parts 1, 2, 3, and 4, regarding the care, handling, and treatment of warm blooded animals held or used for research, teaching, or other activities supported by Federal assistance;

(18) Will have performed the financial and compliance audits as required by the Single Audit Act Amendments of 1996, 31 U.S.C. 7501 *et seq.*, OMB Circular A–133, ''Audits of States, Local Governments, and Non-Profit Organizations,'' Revised, and the most recent applicable OMB A–133 Compliance Supplement provisions for the U.S. DOT; and

(19) To the extent applicable, will comply with all applicable provisions of all other Federal laws, regulations, and directives governing the project, except to the extent that FTA has expressly approved otherwise in writing.

II. Lobbying Certification

An Applicant that submits or intends to submit an application to FTA for Federal assistance exceeding $100,000 is required to provide the following certification. FTA may not award Federal assistance exceeding $100,000 until the Applicant provides this certification by selecting Category ''II.''

A. As required by 31 U.S.C. 1352 and U.S. DOT regulations, ''New Restrictions on Lobbying,'' at 49 CFR 20.110, the Applicant's authorized representative certifies to the best of his or her knowledge and belief that for each application to FTA for Federal assistance exceeding $100,000:

(1) No Federal appropriated funds have been or will be paid by or on behalf of the Applicant to any person to influence or attempt to influence an officer or employee of any Federal agency, a Member of Congress, an officer or employee of Congress, or an employee of a Member of Congress regarding the award of Federal assistance, or the extension, continuation, renewal, amendment, or modification of any Federal assistance agreement; and

(2) If any funds other than Federal appropriated funds have been or will be paid to any person to influence or attempt to influence an officer or employee of any Federal agency, a Member of Congress, an officer or employee of Congress, or an employee of a Member of Congress in connection with any application for Federal assistance, the Applicant assures that it will complete and submit Standard Form–LLL, ''Disclosure Form to Report Lobbying,'' including information required by the instructions accompanying the form, which form may be amended to omit such information as authorized by 31 U.S.C. 1352.

(3) The language of this certification shall be included in the award documents for all subawards at all tiers (including subcontracts, subgrants, subagreements, contracts under grants, loans, and cooperative agreements).

B. The Applicant understands that this certification is a material representation of fact upon which reliance is placed by the Federal Government and that submission of this certification is a prerequisite for

providing Federal assistance for a transaction covered by 31 U.S.C. 1352. The Applicant also understands that any person who fails to file a required certification shall be subject to a civil penalty of not less than $10,000 and not more than $100,000 for each such failure.

Signature Page

Certifications and Assurances for the FTA Over-the-Road Bus Accessibility Program

The Applicant agrees to comply with the applicable requirements of the following Categories of certifications and assurances it has selected below:

Category	Description	
I.	For Each Applicant ...	_____
II.	Lobbying	_____

Affirmation of Applicant

Name of Applicant: _____

Name and Relationship of Authorized Representative: _____

BY SIGNING BELOW, on behalf of the Applicant, I declare that the Applicant has duly authorized me to make the certifications and assurances set forth above and bind the Applicant's compliance. Thus, the Applicant agrees to comply with all Federal statutes, regulations, executive orders, and Federal requirements applicable to each application it makes to the Federal Transit Administration (FTA) in Federal Fiscal Year 2006.

FTA intends that the certifications and assurances the Applicant selects above, as representative of the certifications and assurances in set forth in this document, should apply, as required, to each Over-the-Road Bus Accessibility Grant for which the Applicant seeks now, or may later, seek FTA assistance during Federal Fiscal Year 2006.

The Applicant affirms the truthfulness and accuracy of the certifications and assurances it has made in the statements submitted herein with this document and any other submission made to FTA, and acknowledges that the provisions of the Program Fraud Civil Remedies Act of 1986, 31 U.S.C. 3801 *et seq.*, as implemented by U.S. DOT regulations, ''Program Fraud Civil Remedies,'' 49 CFR part 31 apply to any certification, assurance or submission made to FTA. The criminal fraud provisions of 18 U.S.C. 1001 apply to any certification, assurance, or submission made in connection with a Federal Transit program authorized in Chapter 53 or any other statute

In signing this document, I declare under penalties of perjury that the foregoing certifications and assurances, and any other statements made by me on behalf of the Applicant are true and correct.

Signature _____

Date: _____

Name _____

Authorized Representative of Applicant

Signature Page

Each Applicant for an FTA Over-the-Road Bus Accessibility Grant must provide an Affirmation of Applicant's Attorney pertaining to the Applicant's legal capacity. The Applicant may enter its signature in lieu of the Attorney's signature, provided the Applicant has on file this Affirmation, signed by the attorney and dated this Federal fiscal year, and the Attorney's Affirmation has been entered into the TEAM-Web system as an attachment.

Affirmation of Applicant's Attorney

For (Name of Applicant): _____

As the undersigned Attorney for the above named Applicant, I hereby affirm to the Applicant that it has authority under state and local law to make and comply with the certifications and assurances as indicated on the foregoing pages. I further affirm that, in my opinion, the certifications and assurances have been legally made and constitute legal and binding obligations on the Applicant.

I further affirm to the Applicant that, to the best of my knowledge, there is no legislation or litigation pending or imminent that might adversely affect the validity of these certifications and assurances, or of the performance of the project.

Signature _____

Date: _____

Name _____

Attorney for Applicant

(These Signature Pages must be appropriately completed and signed as indicated.)

Appendix C—FTA Regional Offices

Region I—Massachusetts, Rhode Island, Connecticut, New Hampshire, Vermont and Maine, Richard H. Doyle, FTA Regional Administrator, Volpe National Transportation Systems Center, Kendall Square, 55 Broadway, Suite 920, Cambridge, MA 02142–1093, (617) 494–2055.

Region II—New York, New Jersey, Virgin Islands, Letitia Thompson, FTA Regional Administrator, One Bowling Green, Room 429, New York, NY 10004–1415, (212) 668–2170.

Region III—Pennsylvania, Maryland, Virginia, West Virginia, Delaware, Washington, DC, Susan Borinsky, FTA Regional Administrator, 1760 Market Street, Suite 500, Philadelphia, PA 19103–4124, (215) 656–7100.

Region IV—Georgia, North Carolina, South Carolina, Florida, Mississippi, Tennessee, Kentucky, Alabama, Puerto Rico, Yvette G. Taylor, FTA Regional Administrator, 61 Forsyth Street, SW., Suite 17T50, Atlanta, GA 30303, (404) 562–3500.

Region V—Illinois, Indiana, Ohio, Wisconsin, Minnesota, Michigan, Marisol R. Simon, FTA Regional Administrator, 200 West Adams Street, Suite 320, Chicago, IL 60606–5232, (312) 353–2789.

Region VI—Texas, New Mexico, Louisiana, Arkansas, Oklahoma, Robert Patrick, FTA Regional Administrator, 819 Taylor Street, Room 8A36, Ft. Worth, TX 76102, (817) 978–0550.

Region VII—Iowa, Nebraska, Kansas, Missouri, Mokhtee Ahmad, FTA Regional Administrator, 901 Locust Street, Suite 404, Kansas City, MO 64106, (816) 329–3920.

Region VIII—Colorado, North Dakota, South Dakota, Montana, Wyoming, Utah, Lee Waddleton, FTA Regional Administrator, 12300 West Dakota Avenue Suite 310, Lakewood, CO 80228–2583, (720) 963–3300.

Region IX—California, Arizona, Nevada, Hawaii, American Samoa, Guam, Leslie Rogers, FTA Regional Administrator, 201 Mission Street, Suite 1650, San Francisco, CA 94105–1831, (415) 744–3133.

Region X—Washington, Oregon, Idaho, Alaska, Richard Krochalis, FTA Regional Administrator, Jackson Federal Building, 915 Second Avenue, Suite 3142, Seattle, WA 98174–1002, (206) 220–7954.

[FR Doc. E6–1396 Filed 2–1–06; 8:45 am]

BILLING CODE 4910–57–P

DEPARTMENT OF TRANSPORTATION

National Highway Traffic Safety Administration

[NHTSA–2006–23772]

Incentive Grant Program To Prohibit Racial Profiling

AGENCY: National Highway Traffic Safety Administration, DOT.

ACTION: Announcement of an incentive grant program to encourage States to enact and enforce laws that prohibit the use of racial profiling in the enforcement of traffic laws on Federal-aid highways, and to maintain and allow public inspection of statistics on motor vehicle stops.

SUMMARY: The National Highway Traffic Safety Administration (NHTSA) announces a new incentive grant program concerning racial profiling under section 1906 of the Safe, Accountable, Flexible, Efficient Transportation Equity Act: A Legacy For Users (SAFETEA–LU). This Notice informs the 50 states, the District of Columbia, Puerto Rico, the Virgin Islands, Guam, American Samoa, and the Commonwealth of the Northern Mariana Islands, through their Governors' Representatives for Highway Safety, of the application procedures for grants available in fiscal years 2006 through 2009.

DATES: Applications must be received by the appropriate NHTSA Regional Office on or before July 1 of the fiscal year for which a State seeks a grant.

ADDRESSES: Applications must be submitted to the appropriate Regional Administrator.

FOR FURTHER INFORMATION CONTACT: For program issues, Keith Williams, Office of Traffic Injury Control, Enforcement & Justice Services Division (NTI–122), NHTSA, 400 Seventh Street, SW., Room 5130, Washington, DC, 20590, by phone at (202) 366–0543 or by e-mail at *keith.williams@nhtsa.dot.gov*. For legal issues, Dana Sade, Office of Chief

Counsel, NCC–113, NHTSA, 400 Seventh Street, SW., Room 5219, Washington, DC 20590, by phone at (202) 366–1834 or by e-mail at *dana.sade@nhtsa.dot.gov*.

SUPPLEMENTARY INFORMATION:

Background

Section 1906 of the Safe, Accountable, Flexible, Efficient Transportation Equity Act: A Legacy For Users (SAFETEA–LU) establishes an incentive grant program to prohibit racial profiling (''the Section 1906 Program''). The purpose of the grant program is to encourage States to enact and enforce laws that prohibit the use of racial profiling in traffic law enforcement and to maintain and allow public inspection of statistical information regarding the race and ethnicity of the driver and any passengers for each motor vehicle stop in the State. Section 1906 authorizes $7.5 million in funding each year from FY 2006 through FY 2009.[1] The Section 1906 Grant Program is set forth in an uncodified footnote to 23 U.S.C. 402.

Today's Notice solicits applications for grants under this program. States qualifying for a grant will receive an amount determined by multiplying the amount available for awards under the section 1906 Program in a fiscal year by the ratio that the funds apportioned to the State under section 402 for that fiscal year bears to the funds apportioned to all eligible States under section 402 for that fiscal year, up to a maximum award of 5 percent of the amount made available to carry out section 1906 in that fiscal year. SAFETEA–LU provides that a State may not receive a grant for more than 2 fiscal years if it is qualifying for the grant only by providing assurances to the Secretary that it is undertaking activities to comply, rather than by enacting a complying law.

Definitions

As provided in section 1906—

Racial Profiling means use by a State or local law enforcement officer of the race or ethnicity of a driver or passenger to any degree in making routine or spontaneous law enforcement decisions, such as ordinary traffic stops on Federal-aid highways.[2] As limited by section 1906, this term does not include the manner in which a State or local law enforcement officer considers race or ethnicity when trustworthy, relevant, location-specific and timely information links persons of a particular race or ethnicity to an identified criminal incident, scheme or organization.

Statistical Information on Traffic Stops and *Traffic Stop Data* mean information on the race and ethnicity of the driver and any passengers for each motor vehicle stop made by a State or local law enforcement officer on a Federal-aid highway.

Requirements To Receive a Grant

SAFETEA–LU provides that a State may qualify for a grant under the Section 1906 Program in one of two ways: (a) By enacting and enforcing a law that prohibits the use of racial profiling in the enforcement of State laws regulating the use of Federal-aid highways *and* maintaining and allowing public inspection of statistical information on the race and ethnicity of the driver and any passengers for each such motor vehicle stop made by a law enforcement officer on a Federal-aid highway (a ''Law State''); or (b) by providing satisfactory assurances to the Secretary that the State is undertaking activities to prohibit racial profiling *and* to maintain and provide public access to data on the race and ethnicity of the driver and passengers for each motor vehicle stop made by a law enforcement officer on a Federal-aid highway (an ''Assurances State''). A State may not receive a grant for more than two fiscal years if it is qualifying for the grant as an Assurances State.

Eligibility

The 50 states, the District of Columbia, Puerto Rico, the Virgin Islands, Guam, American Samoa, and the Commonwealth of the Northern Mariana Islands are eligible to apply for grants under the section 1906 grant program.

Application Procedures

To apply for grant funds in a fiscal year, a Law State must submit the certification required by Appendix 1 and an Assurances State must submit the certification required by Appendix 2, signed by the Governor's Representative for Highway Safety, to the appropriate NHTSA Regional Administrator no later than July 1 of the fiscal year.

Award Notification

NHTSA will review the information referenced in each State's Certification for compliance with section 1906 and notify qualifying States in writing of grant awards.

Eligible Uses of Grant Funds

As prescribed by SAFETEA–LU—

Law States may use section 1906 grant funds for:

○ Collecting and maintaining data on traffic stops;

○ Evaluating the results of such data; and

○ Developing and implementing programs to reduce the occurrence of racial profiling, including programs to train law enforcement officers.

Assurances States may use section 1906 grant funds for:

○ Funding activities to prohibit racial profiling in the enforcement of State laws regulating the use of Federal-aid highways;

○ Collecting, maintaining and providing public access to traffic stop data;

○ Evaluating the results of such data; and

○ Developing and implementing programs to reduce the occurrence of racial profiling, including programs to train law enforcement officers.

Financial Accounting and Administration

Within 30 days after notification of award, but in no event later than September 12, a State must submit electronically to the agency a program cost summary (HS Form 217) obligating the funds to the Section 1906 Program. Submission of the program cost summary is necessary to ensure proper accounting for federal funds and is a precondition to receiving grant funds. The Federal share of programs funded under this section shall not exceed 80 percent.

Reporting Requirements

Each fiscal year until all section 1906 grant funds are expended, States should carefully document how they intend to use the funds in the Highway Safety Plan they submit pursuant to 23 U.S.C. 402 (or in an amendment to that plan) and detail the program activities accomplished in the Annual Report they submit pursuant to 23 CFR 1200.33.

Appendix 1: Racial Profiling Incentive Grant

Law State Certification

State (or Commonwealth): _____

Fiscal Year: _____

I hereby certify that:

(1) the State's law prohibiting racial profiling, available at

[1] Congress actually authorized the section 1906 grant program for 5 years from FY 2005 through FY 2009. However, grant funds authorized under the section 1906 Program did not become available to DOT until too late into in FY 2005 to make awards during that fiscal year. The $7.5 million authorized for FY 2005 grants remains available and will be added to the amount available for grant awards in FY 2006, the first year in which grants will be awarded under this program.

[2] Use of the term ''Federal-aid highway'' is governed by Chapter 1 of Title 23, which defines it as a highway eligible for assistance under Chapter 1 other than a highway classified as a local road or rural minor collector (*i.e.*, all public roads except local and minor rural roads).

_____
(include legal citations to all relevant provisions)

is (check one):

☐in effect and being enforced,

☐will be in effect on _____ (date) and will be enforced on _____ (date);

(2) that the State maintains and allows public inspection of statistical information on the race and ethnicity of the driver and any passengers for each motor vehicle stop made by a law enforcement officer on a Federal-aid highway, pursuant to the following official document(s) (*e.g.*, State law, Executive Order, or policy) available at

_____
(include legal or other citations to all relevant provisions)

and

(3) that, if awarded Section 1906 grant funds, the State:

- Will use the funds in accordance with the requirements of Section 1906 of SAFETEA–LU, Pub. L. 109–59; and
- Will administer the funds in accordance with 49 CFR Part 18.

_____
Governor's Highway Safety Representative

Date

Appendix 2: Racial Profiling Incentive Grant

Assurances State Certification

State (or Commonwealth): _____

Fiscal Year: _____

I certify that:

(1) the State is undertaking activities to prohibit the use of racial profiling in the enforcement of State laws regulating the use of all Federal-aid highways, as described in the following official document(s) (*e.g.*, State law, Executive Order, policy) available at

_____
(include legal and other citations to all relevant provisions)

(2) the State is undertaking activities to maintain and allow public inspection of statistical information on the race and ethnicity of the driver and any passengers for each motor vehicle stop made by a State or local law enforcement officer on a Federal-aid highway, as described in the following official document(s) (*e.g.*, State law, Executive Order, policy) available at

_____
(include legal and other citations to all relevant provisions)

and

(3) that, if awarded Section 1906 grant funds, the State:

- will use the funds in accordance with the requirements of Section 1906 of SAFETEA–LU, Pub. L. 109–59; and
- will administer the funds in accordance with 49 CFR Part 18.

_____
Governor's Highway Safety Representative

_____
Date

Issued on: January 30, 2006.

Jacqueline Glassman,

Deputy Administrator.

[FR Doc. E6–1427 Filed 2–1–06; 8:45 am]

BILLING CODE 4910–59–P

DEPARTMENT OF TRANSPORTATION

National Highway Traffic Safety Administration

[Docket No. NHTSA–2006–23771]

State Traffic Safety Information System Improvement Grants

AGENCY: National Highway Traffic Safety Administration, DOT.

ACTION: Announcement of grants to support state traffic safety information system improvements.

SUMMARY: The National Highway Traffic Safety Administration (NHTSA) announces a grant program to improve State traffic safety information systems under Section 2006 of the Safe, Accountable, Flexible, Efficient Transportation Equity Act: A Legacy For Users (SAFETEA–LU). This Notice informs the 50 states, the District of Columbia, Puerto Rico, the Virgin Islands, Guam, American Samoa, the Commonwealth of the Northern Mariana Islands, through their Governors' Representatives for Highway Safety, and the Bureau of Indian Affairs (on behalf of the Indian tribes), of the application procedures to receive grants to be made available in fiscal years 2006 through 2009.

DATES: Applications must be received by the appropriate NHTSA Regional Office on or before June 15 of the fiscal year for which a State seeks a grant.

ADDRESSES: Applications must be submitted to the appropriate Regional Administrator.

FOR FURTHER INFORMATION CONTACT: For program issues, Jack Oates, Office of Traffic Injury Control, Injury Control Operations and Resources (NTI–200), NHTSA, 400 Seventh Street, SW., Room 5118, Washington, DC 20590, by phone at (202) 366–2121 or by e-mail at *jack.oates@nhtsa.dot.gov.* For legal issues, Dana Sade, Office of Chief Counsel, NCC–113, NHTSA, 400 Seventh Street, SW., Room 5219, Washington, DC 20590, by phone at (202) 366–1834 or by email at *dana.sade@nhtsa.dot.gov.*

SUPPLEMENTARY INFORMATION:

Background

Section 2006 of the Safe, Accountable, Flexible, Efficient Transportation Equity Act: A Legacy For Users (SAFETEA–LU) establishes a State traffic safety information system improvement grant program, administered by NHTSA. The purpose of this grant program is to support the development and implementation of effective programs by the States to: (1) Improve the timeliness, accuracy, completeness, uniformity, integration, and accessibility of the safety data that States need to identify priorities for national, State and local highway and traffic safety programs; (2) evaluate the effectiveness of efforts to make such improvements; (3) link the State data systems, including traffic records, with other data systems within the State, such as systems that contain medical, roadway, and economic data; and (4) improve the compatibility and interoperability of the States' data systems with national traffic safety data systems and data systems of other States and enhance NHTSA's ability to observe and analyze national trends in crash occurrences, rates, outcomes, and circumstances. Section 2006 authorizes $34.5 million in funding for each of four fiscal years from FY 2006 through FY 2009. The Section 2006 grant program is codified in 23 U.S.C. 408 (''the Section 408 Program'').

Today's Notice solicits applications for grants under this program. SAFETEA–LU provides that the amount of each first fiscal year grant shall be the higher of $300,000 or an amount determined by multiplying the amount appropriated to carry out the Section 408 Program for that fiscal year by the ratio that the funds apportioned to the State under section 402 for FY 2003 bears to the funds apportioned to all eligible States under section 402 for FY 2003. Each State that qualifies for a successive fiscal year grant shall be eligible to receive the higher of $500,000 or an amount determined by multiplying the amount appropriated to carry out the Section 408 Program for that fiscal year by the ratio that the funds apportioned to the State under section 402 for FY 2003 bears to the funds apportioned to all eligible States under section 402 for FY 2003. No State may receive a grant under this section in more than four years.

Requirements To Receive a Grant

First Year Grants

SAFETEA–LU provides that a State may qualify for a first year grant by demonstrating that it has: (a) Established a highway safety data and traffic records coordinating committee (a ''TRCC''); and (b) developed a multiyear highway safety data and traffic records system strategic plan (a ''Multiyear Plan'' or ''Strategic Plan'').

In addition, the State must certify that it has adopted and uses model data elements identified under the Section 408 Program, or that the 408 grant funds it receives will be used toward adopting and using the maximum number of Model Data Elements as soon as practicable.

TRCC Requirement

In order to satisfy the TRCC requirement for a first year grant, SAFETEA–LU provides that a State TRCC must have a multidisciplinary membership that includes, among others, managers, collectors, and users of traffic records and public health and injury control data systems, and the authority to approve the State's Strategic Plan.

The role and function of a TRCC in the section 408 program is very similar to that of a ''coordinating committee'' in section 408's predecessor program on data improvements (23 U.S.C. 411). Therefore, consistent with the section 411 requirements, under which States already have established the necessary organizational structure, a TRCC should: (a) Include representatives from highway safety, highway infrastructure, law enforcement and adjudication, public health, injury control and motor carrier agencies and organizations; (b) have authority to review any of the State's highway safety data and traffic records systems and to review changes to such systems before the changes are implemented; (c) provide a forum for the discussion of highway safety data and traffic records issues and report on any such issues to the agencies and organizations in the State that create, maintain and use highway safety data and traffic records; (d) consider and coordinate the views of organizations in the State that are involved in the administration, collection and use of the highway safety data and traffic records system; (e) represent the interests of the agencies and organizations within the traffic records system to outside organizations; and (f) review and evaluate new technologies to keep the highway safety data and traffic records systems up-to-date.

Strategic Plan Requirement

SAFETEA–LU provides that a Strategic Plan shall be: (a) Approved by the State's TRCC; (b) address existing deficiencies in a State's highway safety data and traffic records system; [1] (c) specify how deficiencies in the system were identified; (d) prioritize the needs and set goals for improving the system; (e) identify performance-based measures by which progress towards those goals will be determined; and (f) specify how the State will use section 408 and other funds of the State to address the needs and goals identified in its Strategic Plan.

The Section 408 Program, like the Section 411 Program, requires that a State identify in its Strategic Plan specific performance-based measures. When Congress first introduced this performance-based measure requirement, NHTSA received numerous requests from States for technical assistance in identifying performance-based measures applicable to their highway safety data and traffic records systems. In response, NHTSA incorporated into its Traffic Records Highway Safety Advisory (the relevant portion of which is set forth in Appendix 3 to this guidance), a chapter detailing performance-based measures applicable to each of a State's information systems, including its crash, vehicle, driver, citation/adjudication, and injury surveillance systems.

States have incorporated the performance measures identified in NHTSA's Traffic Records Highway Safety Advisory into their Strategic Plans under section 411, and also have relied on those measures in establishing, updating and analyzing the performance of their highway safety data and traffic records systems. Therefore, under the Section 408 Program states should continue to incorporate into their Strategic Plans performance-based measures identified in Appendix 3, both as baselines or benchmarks for and as gauges of their progress towards achieving the goals and objectives identified in their Strategic Plans. Among other baseline measures identified in Appendix 3, States should specify in their Strategic Plans which MMUCC and NEMSIS data elements they currently use.

Model Data Elements Requirement

SAFETEA–LU provides that the Secretary shall, in consultation with the States and appropriate elements of the law enforcement community, determine the model data elements that are useful for observation and analysis of State and national trends in occurrences, rates, outcomes, and circumstances of motor vehicle traffic accidents, including the impact on traffic safety of the use of electronic devices while driving. As explained in more detail below, two sets of model data elements have been developed through collaborative efforts among NHTSA, the States, and other Federal and State stakeholders: the Model Minimum Uniform Crash Criteria (''MMUCC'') and the National Emergency Medical Services Information System (NEMSIS).[2] Therefore, in order to satisfy the model data elements requirement, a State must certify that it has adopted and uses the MMUCC and NEMSIS data elements,[3] or that the 408 grant funds it receives will be used toward adopting and using the maximum number of MMUCC and NEMSIS data elements as soon as practicable.

The MMUCC resulted from requests for technical assistance received by NHTSA from States interested in improving and standardizing their crash data systems. In response, NHTSA and the Federal Highway Administration worked with the Governors Highway Safety Association (''GHSA''),[4] as well as numerous other Federal, State and academic stakeholders, to develop a voluntary minimum set of crash data elements that are accurate, reliable and credible within states, among states, and at the national level. Known as the MMUCC, these model data elements were incorporated into the assessment requirement of the section 411 program, so States already should be applying them to their crash data systems. One of the MMUCC elements, Data Element P–16 covering driver distraction, specifically addresses driver distraction by electronic communications devices, including cell phones, pagers, navigation devices, palm pilots and other such devices, as mandated by SAFETEA–LU.

NEMSIS was developed in 2001 by the National Association of State EMS Officials (''NASEMSO''),[5] with the assistance of NHTSA and the Department of Health and Human Services, in response to a need for

[1] Consistent with concern expressed by the Government Accountability Office about the need for States to link traffic records assessment, strategic plans and progress reports, in addressing existing deficiencies, States should identify and discuss the recommendations contained in their most recent traffic records assessment or audit.

[2] The MMUCC data elements may be accessed at: *http://www.mmucc.us/guideline.aspx* and the NEMSIS data elements may be accessed at: *http://www.nemsis.org/PDFs/NEMSIS%20Version%202.2%20Data%20Dictionary%20Final.pdf.*

[3] Other data elements may be relevant to a State's Highway Safety Data and Traffic Records systems such as data elements required by the Federal Motor Carrier Safety Administration and Federal Highway Administration. Funding sources other than section 408 are available to support the adoption of those data elements.

[4] At that time, GHSA was known as the National Association of Governors' Highway Safety Representatives or NAGHSR.

[5] At that time, NASEMSO was known as the National Association of State EMS Directors or NASEMSD. NASEMSO is an organization made up of representatives of State EMS Officials.

greater uniformity and consistency in Emergency Medical Services data. NEMSIS is a voluntary set of data elements related to patient care and emergency response that has received widespread endorsement by the States for application to their EMS data systems.[6]

Successive Year Grants

SAFETEA–LU provides that a State may qualify for a successive year grant by (a) certifying that an assessment or audit of its highway safety and data and traffic records system has been conducted or updated within the preceding 5 years (an ''assessment'' or ''audit''), (b) certifying that its TRCC continues to operate and supports the Strategic Plan, (c) specifying how section 408 grant funds and any other funds of the State are to be used to address the needs and goals identified in the Strategic Plan, (d) demonstrating measurable progress toward achieving the goals and objectives identified in its Strategic Plan (''measurable progress''), and (e) submitting a current report on the State's progress in implementing its Strategic Plan (a ''Current Report''). In addition, the State must certify that it has adopted and uses the Model Data Elements, or that section 408 grant funds it receives will be used toward adopting and using the maximum number of such Model Data Elements as soon as practicable.

Assessment or Audit Requirement

In order to qualify for a successive year grant, SAFETEA–LU requires a State to certify that an assessment or audit of its highway safety data and traffic records system has been conducted or updated within the preceding 5 years. The section 411 program contained a similar assessment requirement. In arranging for assessments of their highway safety data and traffic records systems since 2000, States have relied on the assessment requirement detailed in the section 411 regulation. Consequently, consistent with State practice under section 411, an assessment or audit used by a State to meet the section 408 Program's assessment or audit requirement should be (a) an in-depth, formal review of a State's highway safety data and traffic records system that addresses the criteria in NHTSA's Traffic Records Highway Safety Program Advisory, (b) that generates an impartial report on the status of the highway safety data and traffic records system in the State, and (c) that is conducted by an organization or group that is knowledgeable about highway safety data and traffic records systems, but independent from the organizations involved in the administration, collection and use of the highway safety data and traffic records systems in the State.

Measurable Progress Requirement

SAFETEA–LU requires that a State demonstrate measurable progress towards achieving the goals and objectives identified in its Strategic Plan. As discussed above, under the section 411 program, States incorporated into their Strategic Plans the performance-based measures detailed in Appendix 3. Consistent with State practice under section 411 and to avoid the imposition of new burdens, in demonstrating measurable progress in a Current Report, States should reference performance-based measures identified in Appendix 3, both as baselines or benchmarks for and as gauges of their progress in implementing their Strategic Plans.

Current Report Requirement

SAFETEA–LU requires that a State submit a Current Report on its progress in implementing its Strategic Plan. The section 411 program contained a similar report requirement in order to qualify for a successive year grant. In accordance with SAFETEA–LU, a Current Report should (a) use performance-based measures, including baseline or benchmark measures, to demonstrate measurable progress toward achieving the goals and objectives identified in a State's Strategic Plan and (b) specify how the State will use new or additional section 408 grant funds and other State funds to address the needs and goals identified in its Strategic Plan. A Current Report also should discuss a State's planned expenditures and measurable progress in terms of specific projects and systems, document any changes in its Strategic Plan, and address recommendations contained in the State's most recent traffic records assessment or audit.[7]

In lieu of submitting a Current Report in support of a successive year section 408 grant application, a State may submit its most recent Annual Report (discussed below in the section entitled Reporting Requirements). However, in order to satisfy section 408's Current Report requirement, an Annual Report must demonstrate Measurable Progress using performance-based measures and adequately identify the State's expenditures in support of its Strategic Plan, as required by SAFETEA–LU. A State that submits an outdated or incomplete Annual Report in lieu of a Current Report runs the risk of failing to qualify for a successive year grant.

Eligibility

The 50 states, the District of Columbia, Puerto Rico, the Virgin Islands, Guam, American Samoa, the Commonwealth of the Northern Mariana Islands, and Indian tribes through the Bureau of Indian Affairs are eligible to apply for grants under the Section 408 Program.

Application Procedures

To apply for a first fiscal year grant, a State must submit the certification required by Appendix 1, signed by the Governor's Representative for Highway Safety, to the appropriate NHTSA Administrator no later than June 15 of the fiscal year. To apply for a successive fiscal year grant, a State must submit the certification required by Appendix 2, signed by the Governor's Representative for Highway Safety, to the appropriate NHTSA Administrator no later than June 15 of the fiscal year.

Award Notification

NHTSA will review the information referenced in each State's certification for compliance with section 408 and notify qualifying States in writing of grant awards.

Eligible Uses of Grant Funds

As prescribed in SAFETEA–LU, States may use section 2006 grant funds for:

- Improving the timeliness, accuracy, completeness, uniformity, integration and accessibility of State traffic safety data needed to identify national, State and local highway and traffic safety priorities;[8]
- Evaluating the effectiveness of efforts to improve State traffic safety data;
- Linking State traffic safety data systems with other State data systems, including those containing medical, roadway and economic data; and
- Improving the compatibility and interoperability of State data systems with national traffic safety data systems and data systems of other States to enhance the observation and analysis of national trends in crash occurrences, rules, outcomes, and circumstances.

[6] After finalizing NEMSIS, NASEMESO prepared a memorandum of understanding to be signed by each State when it was prepared to commit to work toward becoming NEMSIS compliant. Currently, all but two states have signed the memorandum.

[7] See footnote 1 above.

[8] This would include the use of section 408 grant funds to adopt and use the MMUCC and NEMSIS data elements.

Financial Accounting and Administration

Within 30 days after notification of award, but in no event later than September 12, States must submit electronically to the agency a program cost summary (HS Form 217) obligating the funds to the Section 408 Program. Submission of the program cost summary is necessary to ensure proper accounting for federal funds and is a precondition to receiving grant funds. SAFETEA–LU requires that a State maintain its aggregate expenditures from all other sources for highway safety data programs at or above the average level of such expenditures maintained by the State in FY 2003 and FY 2004. The Federal share of programs funded under this section shall not exceed 80 percent, except that the Federal share may be increased for Indian tribes, as provided by 23 U.S.C. 402(d).

Reporting Requirements

Each fiscal year until all section 408 grant funds are expended, States should carefully document how they intend to use the NHTSA-administered funds in the Highway Safety Plan they submit pursuant to 23 U.S.C. 402 (or in an amendment to that plan) and detail the program activities accomplished in the Annual Report they submit pursuant to 23 CFR 1200.33. In addition, an Annual Report needs to account for the status of all funds awarded under section 408 and include a list of projects implemented in the past fiscal year, brief descriptions of activities completed, and any problems encountered. As discussed above in the section entitled Current Report, a State submitting its Annual Report in satisfaction of section 408's Current Report Requirement should ensure that its Annual Report also contains adequate project and system-specific information to demonstrate Measurable Progress, using performance-based measures, and adequately identifies the State's expenditures in support of its Strategic Plan.

Appendix 1: State Traffic Safety Information System Improvement Grant (23 U.S.C. 408)

First Year Certification

State (or Commonwealth): _____

Fiscal Year: _____

I hereby certify that, pursuant to Section 408, the State:

- Has established a highway safety data and traffic records coordinating committee (''TRCC'');
- Has developed a multiyear highway safety data and traffic records system strategic plan (''Strategic Plan'');
- Has adopted and is using the MMUCC and NEMSIS data elements, or that 408 grant funds it receives will be used toward adopting and using the maximum number of MMUCC and NEMSIS data elements as soon as practicable; and
- Will make available or submit to NHTSA its Strategic Plan and documentation of the TRCC's membership, organization and authority;

and that, if awarded Section 408 grant funds, the State will:

- Use the funds only to evaluate, improve and link its highway safety data and traffic records system, in accordance with the eligible uses detailed in 23 U.S.C. 408;
- Administer the funds in accordance with 49 CFR Part 18; and
- Maintain its aggregate expenditures from all other sources for highway safety data programs at or above the average level of such expenditures maintained by the State in FY 2003 and FY 2004.

_____

Governor's Highway Safety Representative

_____

Date

Appendix 2: State Traffic Safety Information System Improvement Grant (23 U.S.C. 408)

Successive Year Certification

State (or Commonwealth) _____

Fiscal Year: _____

I hereby certify that, pursuant to Section 408, the State has:

- Had an Assessment or Audit of the State's highway safety data and traffic records systems, conducted or updated within the preceding 5 years;
- A TRCC that continues to operate and supports the Strategic Plan; and
- Adopted and is using the MMUCC and NEMSIS data elements, or that 408 grant funds it receives will be used toward adopting and using the maximum number of MMUCC and NEMSIS data elements as soon as practicable;

and that the State will make available or provide to NHTSA:

- A Current Report or Annual Report demonstrating the State's measurable progress in implementing the Strategic Plan;
- An Assessment or Audit of the State's highway safety data and traffic records systems, conducted or updated within the preceding 5 years; and
- To the extent that the TRCC charter or membership has changed since the State's previous 408 application, an updated charter or membership list;

and that, if awarded Section 408 grant funds, the State will:

- Use the funds only to evaluate, improve and link its highway safety data and traffic records systems, in accordance with the eligible uses detailed in 23 U.S.C. 408;
- Administer 408 grant funds in accordance with 49 C.F.R. Part 18; and
- Maintain its aggregate expenditures from all other sources for highway safety data programs at or above the average level of such expenditures maintained by the State in FY 2003 and FY 2004.

_____

Governor's Highway Safety Representative _____

Date

Appendix 3: Performance-Based Measures

Following are the standardized, quantitative measurements of data quality used to gauge both a State's baseline or benchmark for and its progress towards achieving the goals and objectives identified in its Strategic Plan:

Timeliness
Consistency
Completeness
Accuracy
Accessibility
Data integration with other information

The definition of each performance-based measure and its relative significance may vary for each of a State's information systems, including its crash, vehicle, driver, enforcement/adjudication, and injury surveillance systems.

Crash Information Quality

Timeliness—The information should be available within a time frame to be currently meaningful for effective analysis of the State's crash experience, preferably within 90 days of a crash.

Consistency—The information should be consistent with nationally accepted and published guidelines and standards, for example:

Model Minimum Uniform Crash Criteria (MMUCC).

Manual on Classification of Motor Vehicle Traffic Accidents, 6th Edition, ANSI D16.1–1996.

Data Element Dictionary for Traffic Records Systems, ANSI D20.1, 1993.

EMS Data Dictionary (Uniform Pre-Hospital Emergency Medical Services Data Conference). (Note: Currently the National EMS Information System (NEMSIS) Dataset and Data Dictionary, Version 2.2 or later.)

The information should be consistent among reporting jurisdictions; i.e., the same reporting threshold should be used by all jurisdictions and the same set of core data elements should be reported by all jurisdictions.

Should it become necessary to change or modify a data element or to change the values of data elements, this should be clearly documented. Frequently, data element values are expanded to provide greater detail than previously (e.g., trucks involved in crashes were previously coded as light or heavy; the new values are changed to ''under 10,000 pounds, 10,001–20,000 pounds, greater than 20,000 pounds).

Completeness—The information should be complete in terms of:

All reportable crashes throughout the State are available for analysis.

All variables on the individual crash records are completed as appropriate.

Accuracy—The State should employ quality control methods to ensure accurate and reliable information to describe individual crashes (*e.g.*, validity and consistency checks in the data capture and data entry processes, feedback to

jurisdictions submitting inaccurate reports) and the State crash experience in the aggregate (*e.g.*, edit checks to determine if specific data variables or categories are possibly under- or over-reported such as putting all unknown crash times into a specific category rather than using imputation methods).

Accessibility—The information should be readily and easily accessible to the principal users of these databases containing the crash information for both direct (automated) access and periodic outputs (standard reports) from the system.

Data Integration—Crash information should be capable of linkage with other information sources through the use of common identifiers where possible and permitted by law. Where common file identifiers or linking variables are not available, some consideration should be given to file linkage using probabilistic linkage methods.

Roadway Information Quality

Timeliness—The information should be updated as required to produce valid analysis. This implies that changes on the roadway (*e.g.*, construction, sign improvements) should be available for analysis as soon as the project is completed.

Consistency—The same data elements should be collected over time and for various classes of roadways. Should it become necessary to change or modify a data element or to change the values of data elements, this should be clearly documented.

Completeness—The information should be complete in terms of the miles of roadway, the trafficway characteristics, the highway structures, traffic volumes, traffic control devices, speeds, signs, etc.

Accuracy—The State should employ methods for collecting and maintaining roadway data that produces accurate data and should make use of current technologies designed for these purposes.

Accessibility—The information should be readily and easily accessible to the principal users of these databases containing the roadway information for both direct (automated) access and periodic outputs (standard reports) from the files.

Data Integration—In order to develop viable traffic safety policies and programs, the roadway information must be linked to other information files through common identifiers such as location reference point. Integration should also be supported between State and local systems.

Vehicle Information Quality

Timeliness—The information should be updated at least annually.

Consistency—The same data elements should be collected over time and they should be consistent with the data elements contained in the other components of the traffic records system. Should it become necessary to change or modify a data element or to change the values of data elements, this should be clearly documented.

Completeness—The information should be complete in terms of vehicle ownership, registration, type, VIN, etc. Information on vehicle miles traveled (VMT) by type or class of vehicle should be available. For commercial vehicles, completeness also involves collection and availability of standard data elements (such as the NGA elements, a set of data developed and recommended by the National Governors' Association for collection of data from crashes involving commercial vehicles).

Accuracy—The State should employ methods for collecting and maintaining vehicle data that produces accurate data and should make use of current technologies designed for these purposes. This includes the use of bar-coded vehicle registration forms that allow scanning of vehicle registration information directly onto appropriate forms (citation, crash, other forms).

Accessibility—The information should be readily and easily accessible to the principal users of these databases containing the vehicle information for both direct (automated) access and periodic outputs (standard reports) from the system, consistent with State confidentiality requirements.

Data Integration—Vehicle information should be capable of linkage with other information sources and use common identifiers (*e.g.*, VIN, Crash Reports Number, etc.) where possible and permitted by law.

Driver Information Quality

Timeliness—Routine license issuance information should be updated at least weekly. Adverse actions (license suspension, traffic conviction) should be posted daily.

Consistency—Information maintained on the State's Driver File should be compatible for exchange with other driver-related systems such as the National Driver Register (NDR), the Commercial Driver License Information System (CDLIS), and other applications for interstate exchange of driver records, especially those facilitated via the American Association of Motor Vehicle Administrators Telecommunications Network (AAMVANet).

Completeness—The information should be complete in terms of data elements (*e.g.*, unique personal identifiers and descriptive data such as name, date of birth, gender) and complete in terms of all prior driving history, especially adverse actions received from other States either while licensed elsewhere or while driving in other States.

Accuracy—The State should employ methods for collecting and maintaining driver information that makes use of current technologies (*e.g.*, magnetic-stripe, bar-codes, smart-cards).

Accessibility—The information should be readily and easily accessible to the principal users of these databases, including driver licensing personnel, law enforcement officers, the courts, and for general use in highway safety analysis. The information should be available electronically for individual record access, and technology should be available to support automated downloading of summary data sets for analytical purposes, provided that appropriate safeguards are in place to protect individual confidentiality within the guidelines established by the State.

Data Integration—Driver information should be capable of linkage with other information sources and use common identifiers (*e.g.*, driver license number, citation number, crash report number) where possible and permitted by law. Updates of driver information from courts should be accomplished through linkages, preferably electronic, to the driver history data.

Citation/Adjudication Information Quality

Timeliness—Information from an issued citation should be recorded on a statewide citation file as soon as the citation is filed in the court of jurisdiction. Information regarding the disposition of a citation should be entered on the citation file, as well as on the driver history record, immediately after adjudication by the courts.

Consistency—All jurisdictions should use a uniform traffic citation form, and the information should be uniformly reported throughout all enforcement jurisdictions.

Completeness—All citations issued should be recorded in a statewide citation file with all variables on the form completed including the violation type; the issuing enforcement agency; violation location; a cross reference to a crash report, if applicable; and BAC, where applicable, etc. All dispositions from all courts should be forwarded for entry on the driver history record.

Accuracy—The State should employ quality control methods to ensure accurate and reliable information is reported on the citation form and updated on the citation and driver history files. The use of mag-stripe, bar-code, smart-card scanner technology to directly input driver information onto the citation form is encouraged.

Accessibility—The information should be readily and easily accessible to the principal users, particularly:

Driver control personnel—to take timely license sanction actions when appropriate.

Law enforcement personnel—for operational analysis and allocation of resources.

Agencies with administrative oversight responsibilities related to the courts—for monitoring court activity regarding the disposition of traffic cases.

Court officials—to assess traffic case adjudication workload and activity.

Data Integration—Citation information should be capable of linkage with other information sources, such as the crash and driver history data, and use common identifiers (*e.g.*, crash report number, driver license number) where possible and permitted by law.

Injury Surveillance Systems Information Quality

Timeliness—Ideally, the medical data on an injury should be available within an Injury Surveillance System (ISS) in the same time frame as data about the crash is available elsewhere within the traffic records system. However, the medical record on the individual may be incomplete initially because local protocols dictate that the medical record is only placed in the ISS when the patient leaves the health care system (*e.g.*, discharged). Every effort should be made to integrate the ISS record with the crash data as soon as the medical records become available.

Consistency—The reporting of EMS run data, hospital ED and admission data, trauma

registry data, and long term health care data should be consistent with statewide formats which should follow national standards such as ICD–9–CM, as published by the Centers for Disease Control (CDC), the use of Injury Severity Scale standards, etc.

Completeness—Although a trauma-registry-based ISS can provide a valuable source of ISS information, it cannot provide a complete picture of the injuries within a community or State. Where possible, the ISS should represent a consensus of all injuries that occur within the community. The ISS should, where feasible, be maintained at a State level but, at a minimum, should be maintained at the local level.

Accuracy—The State should provide local heath care providers with training and support in the accurate coding of injuries and should foster the proper use of the resulting ISS data through education of data users in proper interpretation of these data.

Accessibility—Recognizing the issues of patient and institutional confidentiality, there should be mechanisms in place to balance the demands for data accessibility from end users and the requirements of State and local privacy rules. At a minimum, the traffic safety and injury control communities should be able to access these data in summarized reports designed to address specific needs, including injury type and severity cost data. Ideally, the system should support the creation of ''sanitized'' extracts of the ISS data for use in research, problem identification, and program evaluation efforts.

Data Integration—The true power of the ISS is recognized when the ISS data are integrated with other traffic records system data such as traffic crash, roadway, and crime data, as well as internally between EMS runs, hospital/ED admission data and discharge data. The ISS should be implemented in a fashion that supports this integration in as efficient a manner as possible. Often GIS systems provide the ideal platform for linkage and interpretation of the ISS and traditional traffic records system data. The use of common identifiers whenever possible within the traditional traffic records system and ISS data systems will facilitate this integration effort.

Issued on: January 30, 2006.

Jacqueline Glassman,

Deputy Administrator.

[FR Doc. E6–1426 Filed 2–1–06; 8:45 am]

BILLING CODE 4910–59–P

DEPARTMENT OF TRANSPORTATION

Surface Transportation Board

[STB Docket No. AB–6 (Sub-No. 436X)

BNSF Railway Company—Abandonment Exemption—in Park County, WY

BNSF Railway Company (BNSF) has filed a notice of exemption under 49 CFR 1152 Subpart F—*Exempt Abandonments* to abandon a 0.11-mile line of railroad between milepost 42.59 and milepost 42.70, near Cody, in Park County, WY. The line traverses United States Postal Service Zip Code 82414.

BNSF has certified that: (1) No local traffic has moved over the line for at least 2 years; (2) there is no overhead traffic on the line; (3) no formal complaint filed by a user of rail service on the line (or by a state or local government entity acting on behalf of such user) regarding cessation of service over the line either is pending with the Surface Transportation Board or with any U.S. District Court or has been decided in favor of complainant within the 2-year period; and (4) the requirements of 49 CFR 1105.7 (environmental report), 49 CFR 1105.8 (historic report), 49 CFR 1105.11 (transmittal letter), 49 CFR 1105.12 (newspaper publication), and 49 CFR 1152.50(d)(1) (notice to governmental agencies) have been met.

As a condition to this exemption, any employee adversely affected by the abandonment shall be protected under *Oregon Short Line R. Co.—Abandonment—Goshen,* 360 I.C.C. 91 (1979). To address whether this condition adequately protects affected employees, a petition for partial revocation under 49 U.S.C. 10502(d) must be filed.

Provided no formal expression of intent to file an offer of financial assistance (OFA) has been received, this exemption will be effective on March 4, 2006, unless stayed pending reconsideration. Petitions to stay that do not involve environmental issues,[1] formal expressions of intent to file an OFA under 49 CFR 1152.27(c)(2),[2] and trail use/rail banking requests under 49 CFR 1152.29 must be filed by February 13, 2006. Petitions to reopen or requests for public use conditions under 49 CFR 1152.28 must be filed by February 22, 2006, with: Surface Transportation Board, 1925 K Street, NW., Washington, DC 20423–0001.

A copy of any petition filed with the Board should be sent to BNSF's representative: Sidney L. Strickland, Jr., Sidney Strickland and Associates, PLLC, 3050 K Street, NW., Suite 101, Washington, DC 20007.

If the verified notice contains false or misleading information, the exemption is void *ab initio.*

BNSF has filed environmental and historic reports which address the effects, if any, of the abandonment on the environment and historic resources. SEA will issue an environmental assessment (EA) by February 7, 2006. Interested persons may obtain a copy of the EA by writing to SEA (Room 500, Surface Transportation Board, Washington, DC 20423–0001) or by calling SEA, at (202) 565–1539. [Assistance for the hearing impaired is available through the Federal Information Relay Service (FIRS) at 1–800–877–8339.] Comments on environmental and historic preservation matters must be filed within 15 days after the EA becomes available to the public.

Environmental, historic preservation, public use, or trail use/rail banking conditions will be imposed, where appropriate, in a subsequent decision.

Pursuant to the provisions of 49 CFR 1152.29(e)(2), BNSF shall file a notice of consummation with the Board to signify that it has exercised the authority granted and fully abandoned the line. If consummation has not been effected by BNSF's filing of a notice of consummation by February 2, 2007, and there are no legal or regulatory barriers to consummation, the authority to abandon will automatically expire.

Board decisions and notices are available on our Web site at *www.stb.dot.gov.*

Decided: January 27, 2006.

By the Board, David M. Konschnik, Director, Office of Proceedings.

Vernon A. Williams,

Secretary.

[FR Doc. 06–969 Filed 2–1–06; 8:45 am]

BILLING CODE 4915–01–M

[1] The Board will grant a stay if an informed decision on environmental issues (whether raised by a party or by the Board's Section of Environmental Analysis (SEA) in its independent investigation) cannot be made before the exemption's effective date. *See Exemption of Out-of-Service Rail Lines,* 5 I.C.C.2d 377 (1989). Any request for a stay should be filed as soon as possible so that the Board may take appropriate action before the exemption's effective date.

[2] Each OFA must be accompanied by the filing fee, which currently is set at $1,200. *See* 49 CFR 1002.2(f)(25).

DEPARTMENT OF TRANSPORTATION

Surface Transportation Board

[STB Docket No. AB–290 (Sub–No. 265X)]

Norfolk Southern Railway Company—Abandonment Exemption—in Calhoun County, AL

Norfolk Southern Railway Company (NSR) has filed a notice of exemption under 49 CFR 1152 subpart F—*Exempt Abandonments* to abandon a 5.8-mile line of railroad between milepost 55.3-N at Fort McClellan, and milepost 61.1-N, at Anniston, in Calhoun County, AL. The line traverses United States Postal Service Zip Codes 36201, 36203, 36205, 36206 and 36207.

NSR has certified that: (1) No local traffic has moved over the line for at least 2 years; (2) no overhead traffic has moved over the line for at least 2 years and overhead traffic, if there were any, could be rerouted over other lines; (3) no formal complaint filed by a user of rail service on the line (or by a state or local government entity acting on behalf of such user) regarding cessation of service over the line either is pending with the Surface Transportation Board or with any U.S. District Court or has been decided in favor of complainant within the 2-year period; and (4) the requirements at 49 CFR 1105.7 (environmental reports), 49 CFR 1105.8 (historic reports), 49 CFR 1105.11 (transmittal letter), 49 CFR 1105.12 (newspaper publication), and 49 CFR 1152.50(d)(1) (notice to governmental agencies) have been met.

As a condition to this exemption, any employee adversely affected by the abandonment shall be protected under *Oregon Short Line R. Co.—Abandonment—Goshen*, 360 I.C.C. 91 (1979). To address whether this condition adequately protects affected employees, a petition for partial revocation under 49 U.S.C. 10502(d) must be filed.

Provided no formal expression of intent to file an offer of financial assistance (OFA) has been received, this exemption will be effective on March 4, 2006, unless stayed pending reconsideration. Petitions to stay that do not involve environmental issues,[1] formal expressions of intent to file an OFA under 49 CFR 1152.27(c)(2),[2] and trail use/rail banking requests under 49 CFR 1152.29 must be filed by February 13, 2006. Petitions to reopen or requests for public use conditions under 49 CFR 1152.28 must be filed by February 22, 2006, with: Surface Transportation Board, 1925 K Street, NW., Washington, DC 20423–0001.

A copy of any petition filed with the Board should be sent to NSR's representative: James R. Paschall, Senior General Attorney, Norfolk Southern Corporation, Three Commercial Place, Norfolk, VA 23510.

If the verified notice contains false or misleading information, the exemption is void *ab initio*.

NSR has filed environmental and historic reports which address the effects, if any, of the abandonment on the environment and historic resources. SEA will issue an environmental assessment (EA) by February 7, 2006. Interested persons may obtain a copy of the EA by writing to SEA (Room 500, Surface Transportation Board, Washington, DC 20423–0001) or by calling SEA, at (202) 565–1539. [Assistance for the hearing impaired is available through the Federal Information Relay Service (FIRS) at 1–800–877–8339.] Comments on environmental and historic preservation matters must be filed within 15 days after the EA becomes available to the public.

Environmental, historic preservation, public use, or trail use/rail banking conditions will be imposed, where appropriate, in a subsequent decision.

Pursuant to the provisions of 49 CFR 1152.29(e)(2), NSR shall file a notice of consummation with the Board to signify that it has exercised the authority granted and fully abandoned the line. If consummation has not been effected by NSR's filing of a notice of consummation by February 2, 2007, and there are no legal or regulatory barriers to consummation, the authority to abandon will automatically expire.

Board decisions and notices are available on our Web site at *http://www.stb.dot.gov*.

By the Board, David M. Konschnik, Director, Office of Proceedings.

Vernon A. Williams,

Secretary.

[FR Doc. 06–1014 Filed 2–1–06; 8:45 am]

BILLING CODE 4915–01–P

[1] The Board will grant a stay if an informed decision on environmental issues (whether raised by a party or by the Board's Section of Environmental Analysis (SEA) in its independent investigation) cannot be made before the exemption's effective date. *See Exemption of Out-of-Service Rail Lines*, 5 I.C.C. 2d 377 (1989). Any request for a stay should be filed as soon as possible so that the Board may take appropriate action before the exemption's effective date.

[2] Each OFA must be accompanied by the filing fee, which currently is set at $1,200. *See* 49 CFR 1002.2(f)(25).

DEPARTMENT OF VETERANS AFFAIRS

[OMB Control No. 2900–0178]

Agency Information Collection Activities Under OMB Review

AGENCY: Veterans Benefits Administration, Department of Veterans Affairs

ACTION: Notice.

SUMMARY: In compliance with the Paperwork Reduction Act (PRA) of 1995 (44 U.S.C. 3501–21), this notice announces that the Veterans Benefits Administration (VBA), Department of Veterans Affairs, has submitted the collection of information abstracted below to the Office of Management and Budget (OMB) for review and comment. The PRA submission describes the nature of the information collection and its expected cost and burden; it includes the actual data collection instrument.

DATES: Comments must be submitted on or before March 6, 2006.

FOR FURTHER INFORMATION OR A COPY OF THE SUBMISSION CONTACT: Denise McLamb, Records Management Service (005E3), Department of Veterans Affairs, 810 Vermont Avenue, NW., Washington, DC 20420, (202) 565–8374, fax (202) 565–6950 or e-mail: *denise.mclamb@mail.va.gov*. Please refer to ''OMB Control No. 2900–0178.''

Send comments and recommendations concerning any aspect of the information collection to VA's OMB Desk Officer, OMB Human Resources and Housing Branch, New Executive Office Building, Room 10235, Washington, DC 20503 (202) 395–7316. Please refer to ''OMB Control No. 2900–0178'' in any correspondence.

SUPPLEMENTARY INFORMATION:

Title: Monthly Certification of On-the-Job and Apprenticeship Training, VA Form 22–6553d and VA Form 22–6553d–1.

OMB Control Number: 2900–0178.

Type of Review: Extension of a currently approved collection.

Abstract: Claimants receiving on the job and apprenticeship training complete VA Form 22–6553d to report the number of hours worked. Schools or training establishments also complete the form to report whether the claimant's educational benefits are to be continued unchanged or terminated, and the effective date of such action. VA Form 22–6553d–1 is an identical printed copy of VA Form 22–6553d. Claimants use VA Form 22–6553d–1 when the computer-generated version of VA Form 22–6553d is not available. VA uses the data collected to process a claimant's educational benefit claim. An agency may not conduct or sponsor, and a person is not required to respond to a collection of information unless it displays a currently valid OMB control number. The **Federal Register** Notice with a 60-day comment period soliciting comments on this collection of information was published on October 11, 2005, at page 59118.

Affected Public: Individuals or households, Business or other for-profit, Not-for-profit institutions, Federal Government, and State, Local or Tribal Government.

Estimated Annual Burden: 15,750 hours.

Estimated Average Burden Per Respondent: 10 minutes.

Frequency of Response: Monthly.

Estimated Number of Respondents: 10,500.

Estimated Total Annual Responses: 94,500.

Dated: January 23, 2006.

By direction of the Secretary.

Denise McLamb,

Program Analyst, Records Management Service.

[FR Doc. E6–1353 Filed 2–1–06; 8:45 am]

BILLING CODE 8320–01–P

DEPARTMENT OF VETERANS AFFAIRS

[OMB Control No. 2900–0121]

Agency Information Collection Activities Under OMB Review

AGENCY: Veterans Benefits Administration, Department of Veterans Affairs

ACTION: Notice.

SUMMARY: In compliance with the Paperwork Reduction Act (PRA) of 1995 (44 U.S.C. 3501–21) this notice announces that the Veterans Benefits Administration (VBA), Department of Veterans Affairs, has submitted the collection of information abstracted below to the Office of Management and Budget (OMB) for review and comment. The PRA submission describes the nature of the information collection and its expected cost and burden and includes the actual data collection instrument.

DATES: Comments must be submitted on or before March 6, 2006.

FOR FURTHER INFORMATION CONTACT: Denise McLamb, Records Management Service (005E3), Department of Veterans Affairs, 810 Vermont Avenue, NW., Washington, DC 20420, (202) 565–8374, fax (202) 565–6950 or e-mail: *denise.mclamb@mail.va.gov*. Please refer to ''OMB Control No. 2900–0121.''

Send comments and recommendations concerning any aspect of the information collection to VA's OMB Desk Officer, OMB Human Resources and Housing Branch, New Executive Office Building, Room 10235, Washington, DC 20503 (202) 395–7316. Please refer to ''OMB Control No. 2900–0121'' in any correspondence.

SUPPLEMENTARY INFORMATION:

Title: Obtaining Supplemental Information from Hospital or Doctor, VA FL 29–551b.

OMB Control Number: 2900–0121.

Type of Review: Extension of currently approved collection.

Abstract: This form letter is used to request medical evidence from an insured's attending physician or hospital in connection with continuing disability insurance benefits.

An agency may not conduct or sponsor, and a person is not required to respond to a collection of information unless it displays a currently valid OMB control number. The **Federal Register** Notice with a 60-day comment period soliciting comments on this collection of information was published on June 30, 2005 at pages 37897–37898.

Affected Public: Individuals or households.

Estimated Annual Burden: 61 hours.

Estimated Average Burden Per Respondent: 15 minutes.

Frequency of Response: On occasion.

Estimated Number of Respondents: 244.

Dated: January 23, 2006.

By direction of the Secretary.

Denise McLamb,

Program Analyst, Records Management Service.

[FR Doc. E6–1354 Filed 2–1–06; 8:45 am]

BILLING CODE 8320–01–P

DEPARTMENT OF VETERANS AFFAIRS

[OMB Control No. 2900–0165]

Proposed Information Collection Activity: Proposed Collection; Comment Request

AGENCY: Office of Management, Department of Veterans Affairs.

ACTION: Notice.

SUMMARY: The Office of Management (OM), Department of Veterans Affairs (VA), is announcing an opportunity for public comment on the proposed collection of certain information by the agency. Under the Paperwork Reduction Act (PRA) of 1995, Federal agencies are required to publish notice in the **Federal Register** concerning each proposed collection of information, including each proposed extension of a currently approved collection, and allow 60 days for public comment in response to the notice. This notice solicits comments on information needed to determine a claimant's financial status.

DATES: Written comments and recommendations on the proposed collection of information should be received on or before April 3, 2006.

ADDRESSES: Submit written comments on the collection of information to David Sturm, VA Debt Management Center, Bishop Henry Whipple Federal Building, P.O. Box 11930, St. Paul, MN 55111–0930 or e-mail to: *DMCDSTUR@VBA.VA.GOV*. Please refer to ''OMB Control No. 2900–0165'' in any correspondence.

FOR FURTHER INFORMATION CONTACT: David Sturm at (612) 970–5702 or fax (612) 970–5687.

SUPPLEMENTARY INFORMATION: Under the PRA of 1995 (Pub. L. 104–13; 44 U.S.C. 3501–3521), Federal agencies must obtain approval from the Office of Management and Budget (OMB) for each collection of information they conduct or sponsor. This request for comment is being made pursuant to Section 3506(c)(2)(A) of the PRA.

With respect to the following collection of information, OM invites comments on: (1) Whether the proposed collection of information is necessary for the proper performance of OM's functions, including whether the information will have practical utility; (2) the accuracy of OM's estimate of the burden of the proposed collection of information; (3) ways to enhance the quality, utility, and clarity of the information to be collected; and (4) ways to minimize the burden of the collection of information on respondents, including through the use of automated collection techniques or the use of other forms of information technology.

Title: Financial Status Report, VA Form 5655.

OMB Control Number: 2900–0165.

Type of Review: Extension of a currently approved collection.

Abstract: Claimants complete VA Form 5655 to report their financial status. VA use the data collected to determine the claimant's eligibility for a waiver of collection, setup a payment plan or for the acceptance of a compromise offer on their VA benefit debt.

Affected Public: Individuals or households.

Estimated Annual Burden: 45,553 hours.

Estimated Average Burden Per Respondent: 1 hour.

Frequency of Response: Annually.

Estimated Number of Respondents: 45,553.

Dated: January 24, 2006.

By direction of the Secretary.

Denise McLamb,

Program Analyst, Records Management Service.

[FR Doc. E6–1355 Filed 2–1–06; 8:45 am]

BILLING CODE 8320–01–P

Corrections

Federal Register

Vol. 71, No. 22

Thursday, February 2, 2006

This section of the FEDERAL REGISTER contains editorial corrections of previously published Presidential, Rule, Proposed Rule, and Notice documents. These corrections are prepared by the Office of the Federal Register. Agency prepared corrections are issued as signed documents and appear in the appropriate document categories elsewhere in the issue.

DEPARTMENT OF THE TREASURY

Fiscal Service

31 CFR Part 215

RIN 1510–AB06

Withholding of District of Columbia, State, City and County Income or Employment Taxes by Federal Agencies

Correction

In rule document 06–238 beginning on page 2149 in the issue of Friday, January 13, 2006, make the following correction:

PART 215—[CORRECTED]

On page 2150, in the first column, after the part heading, amendatory instruction ''1. The table of contents for part 215 is revised to read as follows:'' should read ''1. The authority citation for part 215 is revised to read as follows:''.

[FR Doc. C6–238 Filed 2–1–06; 8:45 am]

BILLING CODE 1505–01–D

Federal Register

Thursday,
February 2, 2006

Part II

Farm Credit Administration

12 CFR Part 611, et al.

Amendments to Regulations Governing the Farm Credit System; Final Rule

FARM CREDIT ADMINISTRATION

12 CFR Parts 611, 612, 614, 615, 618, 619, 620, and 630

RIN 3052–AC19

Organization; Standards of Conduct and Referral of Known or Suspected Criminal Violations; Loan Policies and Operations; Funding and Fiscal Affairs, Loan Policies and Operations, and Funding Operations; General Provisions; Definitions; Disclosure to Shareholders; Disclosure to Investors in System-Wide and Consolidated Bank Debt Obligations of the Farm Credit System

AGENCY: Farm Credit Administration.

ACTION: Final rule.

SUMMARY: The Farm Credit Administration (FCA, we, or our) issues this final rule amending our regulations affecting the governance of the Farm Credit System (System). The final rule enhances impartiality and disclosure in the election of directors; requires that Farm Credit banks and associations establish policies identifying desirable director qualifications; requires boards to have a director or an advisor who is a financial expert; requires System institutions to establish director training procedures; and ensures that boards conduct annual self-evaluations. The final rule addresses the term of service and removal of outside directors, while requiring all Farm Credit banks and associations with assets over $500 million to have at least two outside directors. The rule also provides associations with small boards an exemption from having at least two outside directors. The rule further requires that Farm Credit banks and associations have nominating committees and that all System institutions have audit and compensation committees. The final rule clarifies the current rule on disclosure of conflicts of interest and compensation. The final rule does not apply to the Federal Agricultural Mortgage Corporation (FAMC).

DATES: *Effective Date:* This regulation will be effective 30 days after publication in the **Federal Register** during which either or both Houses of Congress are in session except for §§ 611.210(a)(2), 611.220(a)(2)(i) and (ii), 611.325, and 620.21(d)(2) which will be effective one year from the effective date of this rule. We will publish a notice of the effective date in the **Federal Register**.

Compliance Date: Compliance with board composition requirements (§§ 611.210(a)(2) and 611.220(a)(2)(i) and (ii)) and establishment of bank nominating committees (§§ 611.325 and 620.21(d)(2)) must be achieved 1 year from the effective date of this rule. All other provisions require compliance on the effective date of this rule.

FOR FURTHER INFORMATION CONTACT:

Gary Van Meter, Deputy Director, Office of Regulatory Policy, Farm Credit Administration, McLean, VA 22102–5090, (703) 883–4232, TTY (703) 883–4434,

Or

Laura D. McFarland, Senior Attorney, Office of General Counsel, Farm Credit Administration, McLean, VA 22102–5090, (703) 883–4020, TTY (703) 883–4020.

SUPPLEMENTARY INFORMATION:

I. Objectives

The objectives of this rule are to:

- Protect the safety and soundness of System institutions by strengthening the independence of System institution boards and incorporating best governance practices; and
- Support borrower participation in the management, control and ownership of their respective System institutions.

II. Background

The Farm Credit Act of 1971, as amended (Act),[1] authorizes FCA to issue regulations implementing the provisions of the Act. FCA regulations ensure the safe and sound operations of System institutions and establish minimum disclosure levels of financial information to stockholders, investors, and potential investors in the System.[2] Congress explained in section 514 of the Farm Credit Banks and Associations Safety and Soundness Act of 1992 (1992 Act) that disclosure of financial information and the reporting of potential conflicts of interest by System directors, officers, and employees helps ensure the financial viability of the System.[3]

The System has continued to grow in complexity, with an increasing demand for System institutions to maintain qualified boards and provide transparency in reporting to stockholders and investors. Also, market expectations for investments, including System-wide debt obligations, have changed in response to passage of the Sarbanes-Oxley Act of 2002.[4] Congress enacted Sarbanes-Oxley after revelation of accounting and financial management scandals involving public companies, to strengthened financial disclosure, reporting, and accountability requirements for publicly traded companies and other entities registered with the Securities and Exchange Commission (SEC).

While Farm Credit banks and associations are not subject to the governance requirements of Sarbanes-Oxley, the FCA Board determined in September 2003 that our regulatory governance provisions needed updating to reflect the changing environment in which the System operates.[5] On January 19, 2005, we published a proposed rule (70 FR 2963) to amend those parts of our regulations affecting governance of System institutions. The proposed rule addressed five governance areas: (1) Director training, qualifications, and self-evaluations, (2) board composition, (3) nominating committees, (4) conflicts of interest, and (5) audit and compensation committees. We extended the comment period for the proposed rule from March 21, 2005 to May 20, 2005 at the request of several System institutions and the Farm Credit Council (FCC), acting for its membership.[6]

III. Comments and Our Response

We received 348 comment letters on our proposed rule, all but two from individuals and entities associated with the System. Of the comments received, 342 letters were from officers and directors of 85 System associations, each of the five Farm Credit banks, the Federal Farm Credit Banks Funding Corporation (Funding Corporation), and the FCC (System commenters). One borrower of the System and one member of the general public also provided comments on the rule. The majority of the System commenters supported the FCC comments, adding individual elaborations where they deemed appropriate. We also received five comments as part of our regulatory burden initiative addressing areas covered in the proposed rule and address them in this rule. We discuss the comments to our proposed rule and our responses below. Some commenters also responded to our request for comments on the existing rule for waiving the statutory compensation limit of Farm Credit bank directors, which we discuss separately below. Those areas of the proposed rule that did not receive comments are finalized as proposed.

[1] Pub. L. 92–181, 85 Stat. 583.

[2] Section 5.17(a)(8) to (10) of the Act (12 U.S.C. 2001, *et seq.*).

[3] Pub. L. 102–552, 106 Stat. 4131.

[4] Pub. L. 107–204, July 30, 2002.

[5] FCA Fall 2003 Unified Agenda, 68 FR 53168 (September 9, 2003).

[6] 70 FR 9016, February 24, 2005.

IV. General Issues

We received many comments on issues not directed to a single specific rule section. These comments are addressed here using the following nine categories: Our authority to regulate matters contained in System bylaws; the Regulatory Flexibility Act; our policy statement on rulemaking; nonregulatory approaches to governance; the extent of our examination and enforcement authorities; cooperative principles; independent directors; other general comments; and cost analysis.

A. System Institution Bylaws

A significant number of System commenters stated the proposed rule addressed issues reserved to System institutions through their bylaws and that we lack authority to regulate these issues. The commenters cited section 5.17(b) of the Act as precluding FCA's involvement in any area covered by institution bylaws. Some commenters acknowledged our previous assertion that the prohibition on bylaw approval doesn't preclude rulemaking on matters affecting an institution's bylaws, stating that our position applies to the operational conduct of System institutions, not board issues. The commenters explain that regulations in areas addressing boards of directors would directly supersede a subject Congress expressly left to an institution's bylaws, making section 5.17(b) meaningless. Commenters also suggested that any rule on governance is functionally equivalent to our approval of bylaws.

The Act at section 5.17(b) states that we may not approve bylaws, either directly or indirectly. Congress added the prohibition on bylaw approval in 1987 as a technical change.[7] As explained by Congress, this technical change removed the ''last vestiges of the former management role of the Farm Credit Administration.''[8] This statement was in reference to the then statutory requirement that System institutions send bylaws to our offices for review and approval. This practice stopped when section 5.17(b) was enacted.

We recognize that section 5.17(b) removed our role in issuing prior approvals of bylaws. However, nothing in the language of 5.17(b) or its legislative history discusses our regulatory authority. Had Congress intended to limit our regulatory authority on any issue that may also be addressed in a System institution's bylaws, the addition of section 5.17(b) would not have been characterized as a technical change and Congress would have also removed or amended section 5.17(a)(9) of the Act. Section 5.17(a)(9) directs us to issue rules and regulations ''necessary or appropriate'' to carry out the Act. Congress left this authority, and others, in place when prohibiting bylaw approval. Thus, Congress did not remove or limit our authority to issue regulations governing any matter affecting institution bylaws by adding section 5.17(b).

In pursuit of ensuring a safe and sound System and carrying out the Act, institution bylaws are necessarily impacted by our rules. Issuing rules impacting bylaws does not mean we are approving bylaws in violation of section 5.17(b) of the Act. If we took the comments to the fullest extent, a System institution could supersede any regulation simply by adding a contrary bylaw provision. This is clearly not what Congress intended when adding section 5.17(b) to the Act. Section 5.17(b) went to a particular past practice and was not intended to exclude us from regulating all matters that may also be addressed by System bylaws. Additionally, while the authority of System institutions to establish bylaws is fairly broad, it is not without limits. Bylaws must be consistent with applicable laws and regulations and we retain the responsibility to examine institution bylaws to ensure compliance. Consequently, we may regulate the terms and conditions by which institutions exercise their powers through their bylaws, while not approving the bylaws themselves, and then examine compliance with our regulations.

B. Regulatory Flexibility Act Analysis

Commenters questioned our Regulatory Flexibility Act (RFA)[9] certification. In the proposed rule, we certified the rule will not have a significant economic impact on a large number of small entities. Our certification considered each Farm Credit bank together with ''its affiliated associations.'' The commenters objected to our combining associations with Farm Credit banks, stating that because each institution has to comply with the regulatory requirements each should be considered individually for purposes of identifying economic impact. Commenters from one association specifically objected to the implication that no ''small entity'' would be burdened by the rule.

Under the RFA, an agency must certify that a rulemaking will not have a significant economic impact on a substantial number of small entities. If the rulemaking will have such an impact, then the agency must conduct a regulatory flexibility analysis. The RFA definition of a small entity incorporates the Small Business Administration (SBA) definition of a ''small business concern,'' including its size standards. A small business concern is one independently owned and operated, and not dominant in its field of operation. The SBA explains that ''independently owned and operated'' is determined, in part, by the entity's affiliation with other businesses. Generally, an affiliate is one that is controlled by, or has control over, the entity. Businesses with ownership, management, and contractual relationships that make them economically dependent may also be affiliates. For purposes of the RFA, the interrelated ownership, control, and contractual relationship between associations and their funding banks are sufficient to permit them to be treated as a single entity.

Further, System institutions fall under the SBA ''Credit Intermediation and Related Activities'' size category for small business concerns and the ''All Other Non-Depository Credit Intermediation'' subcategory. This subcategory defines a small entity as one with average annual assets less than $6 million. As affiliates, the combined average annual assets of each Farm Credit bank and its affiliated associations exceed $6 million. Therefore, System institutions do not satisfy the RFA definition of ''small entities.''

C. Compliance With FCA Policy Statement 59 ''Regulatory Philosophy''

The FCC board of directors sent a separate letter from the FCC letter commenting on the entire rule, stating that the proposed governance rule was inconsistent with FCA Board Policy Statement 59 (FCA–PS–59 (1994)).[10] Two other commenters also stated that we violated FCA–PS–59 (1994). This policy statement sets out our philosophy on issuing regulations necessary to carry out the Act and promote the safety and soundness of the System. The FCA Board, independent of the comment letters received on the proposed governance rule, issued a

[7] Section 110 of the Agricultural Credit Act of 1987, Pub. L. 100–233.

[8] H. AMDT 425 on HR 3030 (August 4, 1987). In the Farm Credit Amendments Act of 1985 (Pub. L. 99–205), Congress amended the Act to make us an arm's-length regulator, while increasing our regulatory powers.

[9] 5 U.S.C. 601 *et seq.*

[10] Statement on Regulatory Philosphy, 59 FR 32189 (June 22, 1994). Updated May 16, 1995, 60 FR 26034.

revised FCA–PS–59 (1994) on June 8, 2005.

The FCC board asserted the proposed rule violates the guidelines contained in FCA–PS–59 (1994) in five areas. First, they claimed they found no reasoned determination on the beneficial value of the proposed rule relative to the cost, stating the rule will impose greater costs on System institutions. A separate commenter also stated we had not completed a cost-benefit analysis before proposing the rule. While we did consider the proposed rule's cost to System institutions, the proposed rule did not explain clearly our cost-benefit consideration. We have included our cost-benefit review at section IV.I. of this preamble.

Second, the FCC board remarked that we did not specifically identify risks or problems needing to be addressed in a rule. The provisions in FCA–PS–59 (1994) are not intended to limit us to issuing regulations only when there is an existing problem. The proposed rule explained that recent corporate scandals led us to reevaluate the preventive safeguards in our regulations. No existing problem of the nature leading to passage of Sarbanes-Oxley presently exists in the System, but our responsibility as a safety and soundness regulator requires us to be proactive, as well as reactive.

Third, the FCC board stated the proposed rule contained ''explicit operational direction'' instead of performance criteria as stated in FCA–PS–59 (1994). FCA–PS–59 (1994) states that we will, to the extent feasible, specify performance criteria and objectives, but does not preclude the use of operational constraints. FCA–PS–59 (1994) states that any operational constraints we regulate will be based on specific statutory requirements or achieving regulatory objectives. The rule provides performance criteria in many areas, most notably in director qualifications, training, and elections. Some operational direction was provided for board committees and for director removal to ensure these actions occurred in a manner considered suitable for safety and soundness or to protect the cooperative structure of the System. To address commenter concerns, we have more clearly explained our reason for each provision of this final rule in the section-by-section portion of this preamble.

Fourth, the FCC board challenged the statutory basis for the proposed rule because they did not find specific statutory provisions for most of the rule. We issued our proposed rule under our general authority at section 5.17(a)(9) and (10) of the Act, which empowers us to issue regulations for the safety and soundness of the System and to carry out provisions of the Act. Further, section 5.17(a)(8) authorizes us to regulate the preparation and distribution of information on the financial condition of System institutions to stockholders and investors. Many of the provisions in the rule relate to the financial condition of System institutions, such as the Annual Meeting Information Statement (AMIS), disclosure of conflicts of interest, and the role of audit committees in preparing financial reports.

Fifth, the FCC board claimed we did not consider the approach taken by other financial regulators, stating we inconsistently followed their approach and that we were applying Sarbanes-Oxley to the System, a law they state ''Congress specifically chose not to apply to the System.'' They also stated that events in the community of publicly traded companies are ''tenuous justification'' for updating our regulations. We stated in the preamble to the proposed rule that Farm Credit banks and associations are not subject to the governance provisions of Sarbanes-Oxley. We do not agree that our proposed rule is inconsistent with what other regulators require. We used Sarbanes-Oxley as a guide, along with the governance rules of the SEC, the Federal Housing Finance Board (FHFB) and other regulators, as well as the System's own governance efforts. The FCA, as an independent regulator of the System, is not required to follow the actions of other regulators. Instead, FCA–PS–59 (1994) states that we will consider the policy positions of other regulators to decide if we should follow them or take a different approach, which we did in the proposed governance rule.

Finally, the FCC board's letter discussed our use of the disclosure and conflict of interest provisions in section 514 of the Safety and Soundness Act of 1992. They stated that governance is unrelated to disclosures and conflicts of interest. They also commented that our last review of regulations implementing the 1992 Act, conducted more than 10 years ago, is sufficient absent a formal study or ''reliable source'' suggesting our regulations are inadequate. Good governance involves accountability and transparency, thus disclosing conflicts of interest and reporting to stakeholders directly responds to those issues. We are charged with examining and regulating the System. As part of that responsibility, we periodically review our regulations in response to changes within the System, the financial community, or agriculture. Proposals to modify rules are based on our careful study, research and analysis. A requirement that we hire a consultant to study the regulations before we amend them would be inappropriate.

D. Nonregulatory Approach to Governance

Most of the System commenters supported our objective of improving System governance, but questioned the need for regulations. Of these, 194 commenters asked that we withdraw the rule and work with the System to find nonregulatory ways to strengthen institution governance. These commenters remarked that System institutions are working to improve governance independent of FCA regulatory requirements and should be allowed to continue their efforts without having to incorporate potentially different governance standards. Some commenters suggested the rule should be withdrawn until the System completes its own self-governance efforts. Others explained that voluntary governance policies, incorporating both the spirit and intent of governance, are more appropriate for the System rather than prescriptive regulations designed to make the System conform to publicly traded companies.

We are not withdrawing the rule, but have withdrawn or amended certain provisions based on specific comments. Our governance rule sets a minimum level of performance that is mandatory for all System institutions, including those that may not endorse the System's voluntary initiatives. While voluntary governance is valuable, it does not replace the stability that rules provide in assuring System stakeholders of the safety and soundness of the System. We have a responsibility to address these issues given the importance of strong governance to the safe and sound operations of the System and the current business climate in which the System operates. Our intent is to ensure that appropriate governance standards exist for all System institutions. As we discuss in section IV.F. of this preamble, the cooperative structure of the System was a prime consideration in our governance rulemaking, and we reviewed the rules for public companies for information purposes and identification of the evolving practices of the marketplace. We believe the assurances derived from a regulatory minimum standard and the System's voluntary governance efforts will benefit the System by increased stockholder, investor, and public confidence.

Commenters stated that the rule seeks consistency across the System without explanation and does not appropriately

consider the different management needs of each institution. System commenters asked that each institution be allowed to determine how to address governance areas based on the institution's size, complexity, risks, and resources. Some System commenters questioned if we recognized the different operational behaviors of the institutions. Another commenter stated that our governance rule tries to centralize a decentralized System. This commenter also remarked that the rule may inhibit growth due to its rigidity. As an alternative, many commenters asked that we rely on our examination and enforcement authorities or issue rules that require institutions to establish governance policies within identified areas and examine implementation of those policies based on individual institution operations.

While we believe it is important to preserve individual institution operating flexibility wherever and whenever possible, our responsibility as regulator requires us to issue regulations we determine appropriate for safety and soundness reasons. We carefully consider the size, complexity, risks, and resources of System institutions when developing our rules, and incorporate variations and flexibility as appropriate. Regulations necessarily place limits on individual institution flexibility to ensure appropriate business practices are consistently followed in all operating environments. The final rule includes regulatory relief in certain provisions, particularly for smaller institutions, where complexity and risks are limited. Further, we believe that this rule does not centralize the System but facilitates our ongoing examinations of System compliance with governance activities.

The FCC also stated that governance rules are not necessary because the System is the only government-sponsored enterprise (GSE) with a fully independent safety and soundness regulator having full enforcement powers and an entirely self-funded insurance fund under the direction of another independent regulator. They further commented that there are enough regulations already in place to address governance of System institutions. They also cited ''extensive self-regulating'' practices in place such as the general financing agreements (GFA), market access agreement (MAA), and contractual interbank performance agreement (CIPA). Commenters also highlighted the System-wide disclosure program managed by the Funding Corporation. One commenter claimed the System as a whole implemented the creation of the insurance fund, the System-wide disclosures, the GFA, the MAA, and other internal controls on a voluntary basis so governance rules are not needed.

We recognize the System has taken steps to enhance market discipline and transparency in its reporting and disclosures, but this rule is necessary to provide clear guidelines that will facilitate our on-going examinations of, and System compliance with, governance activities. The GFAs, MAA, and CIPA mentioned by commenters are supported by, and operate within, statutory authorities and regulatory constraints. While these System agreements support consistent and sound financial conditions, they do not focus directly on the governance practices of individual institutions. Additionally, we note that the insurance fund was created by Congress as part of the Agricultural Credit Act of 1987 [11] and is available to cover losses when an institution fails. Insurance funds are generally not considered governance tools. Proper governance helps prevent loss through better operations, thereby avoiding the need to use insurance funds and enforcement authorities to resolve problems.

Commenters remarked that the proposed rule implements no new statutory provision and does not respond to a specifically identified safety and soundness issue. The FCC also referenced the instructions of the Farm Credit System Reform Act of 1996 (1996 Act) [12] to reduce regulatory burdens, stating that any rulemaking after 1996 is held to a higher ''burden of proof'' that a need exists for a rule. One commenter specifically stated that a rule increasing reporting and disclosures to stockholders will not result in a more informed or involved membership. Another commenter stated that increasing regulations takes away the control of the board and management to effectively run their operations. Several commenters expressed concern that we were making changes just for the sake of change. Some stated the proposition that we should only issue rules when there is a problem, real or perceived. They also remarked that the rule might send the message to the marketplace that we, as the regulator, consider the System to have a governance problem. Another commenter stated we had gone beyond our role as a safety and soundness regulator.

We disagree that this rule is not needed or is a change for the sake of change. We believe the rule will result in a better informed and more involved membership. Congress charged us to issue regulations to ensure the safety and soundness of the System. With the recent growth of the System, increased sophistication in financial markets, and on-going scrutiny of public and agency financial activities and related reporting practices, we are obligated to review current practices and regulatory standards to ensure the continuing safety and soundness of System institutions both collectively and individually. As explained in section IV.C. of this preamble, we have flexibility to issue rules in response to a problem or proactively to ensure continued safe and sound business operation. Our proactive rulemaking in the area of governance should make it clear to the marketplace that we do not see a governance problem in the System, but instead are acting to update regulatory requirements that preserve the good standing of the System. We also disagree that the rule takes over or reduces board control. The rule clarifies existing board responsibilities and authorities while providing boards with more tools to carry out their fiduciary and oversight responsibilities. Finally, this rule complies with the 1996 Act. Section 212(b) of the 1996 Act requires us to continuously review our regulations to eliminate rules that are unnecessary, unduly burdensome, costly, or not based on law. The 1996 Act specifies that we are to make these eliminations only if they would be consistent with law, safety, and soundness. As explained throughout this preamble, this rule is consistent with the law, safety, and soundness concerns.

E. Examination and Enforcement Authority

Many System commenters cited our examination and enforcement authorities as a reason why regulations are unnecessary. The FCC explained that board members must certify receipt of an examination report, which is presented to an institution's board, and our examiners may then meet in executive session with the board to explain the report. Commenters also stated that we have all the enforcement powers necessary to correct any unsafe or unsound governance practice without this rule. A commenter stated that we may examine for governance, not impose operating procedures, and the examination process allows us to address specific issues as they arise instead of applying a rule to the entire System.

[11] Pub. L. 100–233 (January 6, 1988).

[12] Pub. L. 104–105, 110 Stat. 162 (February 10, 1996).

We examine to ensure the safety and soundness of System institutions and their compliance with laws and regulations. This role is not a substitute for our responsibility to issue regulations implementing the Act and ensuring the safety and soundness of System institutions. Our regulations provide minimum standards of performance by System institutions. Our examiners use our rules as the basis for compliance determinations and to require any necessary corrective actions. Regulations reduce the likelihood that exams will uncover unsafe and unsound practices and provide a minimum standard of performance to assure stakeholders of the safe and sound operations of the System. While we agree with the commenters that we have a high level of enforcement authority, we do not view them as our primary tool for ensuring the safety and soundness of the System. This is ensured by a clear set of rules and thorough regular examinations.

F. Cooperative Structure of the System

Most System commenters expressed the opinion that we did not give enough consideration to the cooperative nature of the System in our proposed rule. Some stated that the cooperative ownership of the System provides more extensive safeguards than non-cooperative businesses. Commenters also stated that we were trying to change the cooperative nature of the System. Other commenters stated that we do not understand that they, as fellow owners, are also directly affected by institution operations and stand to gain or lose by how it is run, unlike public companies. One commenter pointed out that System directors do not have the same motivations and temptations as corporate directors since System stock is not publicly traded and has no market value.

We drafted our rule with full consideration of the System's cooperative structure. In developing both the proposed and final rule, we first relied on the requirements of the Act, safety and soundness concerns, overriding public policy, and the cooperative structure of the System. We agree that a cooperative structure may provide greater safeguards than other structures for many of the reasons given by the commenters. However, the cooperative structure of the System relies on owner control and participation, supported by accurate and timely information to owner stockholders, as well as their directors, who act in stockholders' behalf. The rule provides flexibility for individual System institutions, while establishing standards for governance that support cooperative principles and complies with applicable statutory requirements.

Commenters also stated that issuing a regulation to implement best practices is unwise. Commenters pointed out that best practices change often while regulations change slowly. Another commenter remarked that using regulations to implement best practices inhibits System institutions from adjusting their governance practices in a timely manner. Still another commenter questioned the rationale in adopting best practices that may not be in the best interest of System stockholders. Others remarked that by issuing a rule on best practices, we demonstrate little respect for the ability of each institution's board to put best practices into place on its own.

We believe it is appropriate to use best practices in our rule. We used those best practices of System institutions and other corporations that we considered appropriate for the long-term safety and soundness of the System. We used corporate best practices because System institutions are, by requirements of the Act, incorporated and considered corporate entities for specific purposes. We do not feel this creates a conflict with the cooperative nature of the System, as most non-System cooperatives are corporate entities. While we recognize that details associated with best practices may change over time, the underlying principles have been identified in the rule with sufficient flexibility in their application to accommodate most changes in best practices.

One commenter said that our authority as a regulator to establish governance practices was transferred to the System in 1987 and we were establishing governance practices in conflict with SEC rules. The commenter also stated that our rule could hinder progress and we should not exceed the governance requirements of other regulators. Another commenter stated that our rule went beyond reasonable or appropriate regulatory guidance, instead becoming burdensome and interfering. This commenter also stated that our rule exceeds non-System regulatory schemes, which often only require companies to disclose whether or not a particular practice is adopted.

Our authority to regulate governance matters was not transferred to the System in 1987. To the extent that the commenter making this statement is referring to our authority to approve bylaws, we address that issue in section IV.A. of this preamble. We disagree with the commenters that our rule is inconsistent with, or more burdensome than, what other regulators require. Although we are not required to follow the actions of other regulators, we did consider their governance actions. We considered the governance actions of the FHFB and the cooperative lending institutions it regulates, because of the similarity in structure to the System. We also paid close attention to the SEC as the issuer of regulations carrying out Sarbanes-Oxley but relied less on the Office of the Comptroller of the Currency (OCC), Office of Thrift Supervision (OTS) and Office of Federal Housing Enterprise Oversight (OFHEO) individual governance rules because a portion of the entities they regulate register with the SEC and therefore fall under certain SEC governance rules. Many of the provisions in our proposed rule are similar to the rules of other regulators, deviating where we determined their rules were not consistent with our role as an arm's-length regulator or with the cooperative structure of the System.

G. Independent Directors

Several System commenters stated that our use of the word ''independent'' in the rule was inappropriate. They explained that director independence means that management does not serve on the board of directors and most System directors are independent. The FCC further stated that the Act, our existing regulations, and institution bylaws already mandate independence as defined by the commenters. Other System commenters stated we were misrepresenting all System directors, whom they stated have ''absolute independence from management.'' One commenter stated that the institutions' boards should develop a charter defining independence and operate accordingly.

We do not agree with the commenters' definition of independent when discussing System boards. The commenters rely on the corporate community's use of the term. We deliberately chose not to use the common corporate understanding of ''independent'' for the very reasons cited by the commenters. We instead used the term based on our existing conflict of interest rules at part 612 and certain sections of the Act. Our use of the word ''independent'' for committee memberships precludes employment, contractual business relationships, and lending relationships that would interfere with a director's ability to exercise disinterested and objective judgment. The term as applied to the outside director is restricted to the Act and legislative history of the Act discussing ''disinterested'' directors and

is based on a lack of ownership interest in the institution or System, thereby offering a different perspective from the owner-directors.

H. Other General Comments

We received comments on portions of the proposed rule preamble language that do not address regulatory provisions and result in no change to the rule. Specifically, commenters stated that we proposed a requirement for a Code of Ethics without considering existing safeguards, that institutions should be allowed to adopt a Code in a manner they determine appropriate, and that we should not suggest a Code of Ethics for directors and all employees. In the preamble to the proposed rule, we encouraged each System institution to adopt a Code of Ethics; we made no proposal requiring a Code of Ethics. We explained that we were not regulating a Code of Ethics, but encouraging System institutions to follow current best practices.

Several System commenters also criticized us for indicating our willingness to participate in System training. The commenters stated that such participation was inappropriate for an arm's-length regulator and an unwarranted intrusion into System affairs and activities. We are now clarifying that our preamble statement reaffirmed our long-standing commitment to support System training, which does not compromise our role as arm's-length regulator.

A public commenter stated that we had left out the general public as a stakeholder when explaining the purpose of our rule. The commenter also suggested more public representation on System boards of directors. We disagree; we gave appropriate consideration to the public stakeholders when drafting our rule. The System is composed of private cooperative entities and, although its GSE status gives it a public policy purpose, it does not convert System institutions into governmental entities or public companies. As to public representation on System boards, the Act provides clear direction on System board composition. The cooperative nature of the System requires, at a minimum, a System board to be comprised primarily of stockholder-borrowers, thus preventing a majority public representation as requested by the commenter.

One commenter stated our rule was forcing associations to merge or consolidate into larger entities. Another commenter remarked that we did not acknowledge the legitimacy of small institutions, placing pressure on smaller associations to merge, similar to the pressure they receive from their district bank. We are not directly or indirectly forcing any institution to merge. The rule provides several small institution exemptions to primary governance issues out of concern for the economic burden smaller associations might encounter if required to follow all aspects of the rule.

I. Cost Analysis

Several commenters objected to our use of the word ''believe'' in the preamble out of concern that our proposal might be based more on conjecture than demonstrated need or facts. Commenters also questioned our consideration of the implementation cost of the rule. Use of the word ''believe'' expresses our conclusion that aspects of the proposed rule are needed, are in accordance with our careful study of the issues, and are based on our research, analysis, and statutory requirements or authorities. As most System commenters noted, while they objected to the added regulatory requirements, they supported the improved governance standards and, in fact, had already implemented many of them. This factored significantly in our consideration of the rule's cost to System institutions. We identified three provisions having potential cost implications: (1) The addition of a second outside director; (2) the implementation of director orientation and training programs; and (3) the inclusion of a financial expert on the board.

A second outside director will result in increased salary and benefit expenses for those institutions without two outside directors. Given its small percentage of overall System expenses, we do not believe this cost is significant enough to override the policy benefits of additional outside directors. However, we noted the impact to smaller associations could exceed our average cost computation and amended the rule accordingly. Likewise, director training and orientation may result in increased costs if an institution does not already have such a program. Based on comments received, most institutions already have strong training programs and our rule would likely result in changes to the types of courses taken rather than increasing the number of courses taken, thereby minimizing costs.

There may be added costs to locate a financial expert if none are currently on an institution's board. We considered the nature of an institution, its complexity, risks, and location to provide more flexibility and board discretion in how to meet this requirement. In doing so, we believe we have minimized the costs for most institutions. Since these added requirements and the minimally related costs associated with them are designed to enhance the safety and soundness of System institutions, we conclude the resulting benefits, including improved investor and stockholder confidence, will exceed the added costs.

V. Section-by-Section Analysis

A. Definitions

1. Entity [§ 612.2130]

We received 12 letters on the definition of ''entity'' in part 612 of our regulations. Eight generally objected to the change and four commented that they had no objection. One commenter disagreed with removing the exception for System institutions, explaining that transactions between institutions should not be treated differently from other non-System financial institutions under our standards of conduct rules. We make no changes to this provision in the final rule, but make a clarifying technical change to § 612.2150(d). Without this clarification, § 612.2150(d) may have been read to affect intra-System transactions.

2. Outside Director [New § 619.9235]

We received 23 System comment letters on our use of the terms ''outside'' and ''inside'' to identify director positions. Commenters stated that these terms were not found in the Act and suggested we use the terms ''Nonaffiliated Board Selected Director'' and ''Affiliated Board Selected Director.'' One commenter pointed out that agents may serve as outside directors for banks under the Act, but did not disagree with the definition excluding agents from serving as outside directors for any institution. We final this provision as proposed because there were no comments disagreeing with the actual definition of ''outside director.'' We also note that Congress uses and defines the term ''outside director'' in section 7.12 of the Act, so our use of the term is appropriate.

3. Senior Officer [§§ 611.1223, 612.2155, 620.1, 620.5, and New 619.9265]

We received nine System letters objecting to issuing a specific definition of ''senior officer'' instead of allowing each institution's board to define the term. Two commenters asked for clarification on the meaning of ''major policy-making function,'' explaining that only the board makes policy decisions. One commenter asked that we use the SEC definition of ''senior officer'' instead of the one proposed.

Another commenter expressed concern that the definition may end up including all officers.

Our definition of senior officer is similar to, but less inclusive than, the SEC definition of ''executive officer.'' [13] We included deviations from the named positions in the SEC definition based on System occupations and also limited the use of ''policy making'' to major policy making. We clarify that while the rule identifies the titles of the senior officers included in this definition, System institutions are not required to use these titles. Officers accomplishing the functions of these offices while using other titles are regarded as senior officers for purposes of our regulations. Each institution board retains the ability to designate who is a senior officer through their hiring practices and the extent to which they include officers, not named in our definition, in major policy making.

B. Bank and Association Boards of Directors

1. Director Qualifications and Training [New § 611.210]

a. Qualifications

We received 100 System letters on the requirement for boards to establish director qualifications. Of the comments received, 48 objected to being required to establish director qualifications and to our identifying specific areas of experience. Other commenters expressed concern that establishing qualifications would eliminate many people who are able to run a successful business or would fail to consider broader qualities that determine a candidate's ability to serve. They also stated that establishing director qualifications makes it difficult to attract qualified stockholders willing to serve on the board. Still other commenters stated that directors lacking established qualifications under this provision, especially young, beginning, and small (YBS) borrowers, are capable of learning the information they need to know after election to the board. A separate commenter stated that true cooperative principles mean that any borrower of the institution with an acceptable loan should have the right to be nominated. Seven commenters remarked on the conflict between established qualifications and floor nominations. Two thought the requirement was compatible with the outside director selection process but was not consistent with the cooperative principles of electing a board from its membership. A commenter said that associations already struggle with locating willing candidates with loans in good standing and our rule will make this task more difficult.

One commenter noted that a qualification for a director should be integrity, not knowledge of financial reporting or risk management. Others said that it is the board's responsibility to decide what qualifications are needed. A few other commenters said the criteria in the rule were too narrow, making it more difficult to fill director positions. These commenters expressed concern that we could establish a standard that was either irrelevant or could not be met by some institutions. Another commenter remarked that it is difficult to regulate meaningful standards for candidate education because candidate evaluations are subjective. The commenter further explained that production agriculture generally offers fewer titles and certifications for professional verification, not withstanding strong educational backgrounds. This same commenter concluded that our rule would impose an unnecessary burden on the nominating committee. Other commenters also objected to the inference that institutions conduct director recruitment. One of these commenters further stated that we demonstrated a lack of respect for the ability of stockholders to select qualified directors. One commenter said that we should encourage better communications between the board and the nominating committee within the confines of the Act.

Two commenters suggested that the institution identify in their bylaws the desirable areas of knowledge and expertise and have the nominating committee consider these attributes in searching for suitable candidates. Another commenter suggested replacing the standards with guidelines, recognizing that the necessary qualifications would vary depending on the size, strength, and complexity of the institution. We were asked to explain who will set the standards and how they will be applied. Commenters stated that stockholders must have the ability to determine who among the eligible candidates are best qualified to serve. Other commenters suggested that the regulatory language be revised to give latitude to the directors to articulate their own standards.

We agree that it is the board's responsibility to establish director qualifications. The Act requires bank and association boards to identify director qualifications in their bylaws and we proposed regulations to implement this provision of the Act. We have clarified the rule to clearly state institutions must establish policies addressing director qualifications. We also require the policy be periodically updated and provided to the institution's nominating committee. We make this change in response to commenter concerns for flexibility and the cooperative election process.

We also modified our rule by requiring identification of desirable director qualifications as opposed to prescribing them. In preserving the board's authority to determine relevant and needed qualifications, the identified qualifications must be adequate to meet the board's needs but broad enough to allow the nominating committee to identify at least two willing and qualified candidates for each open position without undue burden or difficulty. We have confidence that boards can identify relevant director qualifications for their respective institutions even though there is an element of subjectivity. We expect that the board's training program will be sufficient to enhance directors' skills and qualifications, such as for potential YBS directors, so that they can acquire needed skills and qualifications for board service. We also removed the suggested areas of experience from the final rule. While we proposed them as suggested areas, not requirements, commenters generally viewed them as obligatory. We address the comment that institutions do not engage in recruitment of directors in V.B.3. of this preamble.

Commenters objected generally to our interpreting the Act, looking at legislative history and issuing regulations on board composition, remarking that Congress spoke unambiguously and directly to director requirements. The FCC pointed out that institutions and their nominating committees are obligated to consider all eligible stockholders. A few commenters remarked that the Act reflects the Congressional intent that the System be governed by popularly elected directors without regard to expertise or other qualifications.

We do not agree that Congressional intent precludes consideration of expertise or other qualifications for directors. The Act specifies that director qualifications be included in an institution's bylaws. While it is the responsibility of the nominating committee to find candidates who meet, or potentially will meet through director

[13] SEC Rule 3b–7 defines an ''executive officer'' as the president, any vice president of the registrant in charge of a principal business unit, division or function (such as sales, administration or finance), any other officer who performs a policy making function or any other person who performs similar policy making functions for the registrant.

training, board-identified qualifications, this does not preclude the nomination of director candidates from the floor or any other eligible stockholder from seeking nomination without regard to desirable director qualifications. In the end, it is the stockholders who have the right to decide, through the balloting process, which candidates will best serve their needs.

We moved the requirement for a board financial expert from § 611.220 on outside directors to this section of the rule. We address comments made on the financial expert proposal and resulting changes in the rule in the outside director section of this preamble at V.B.3.a.i.

b. Director Training

We received 17 System comments on this provision of the rule. Three commenters supported the requirement for director training and nine others suggested that we require each institution to adopt a policy on director training. Three commenters recommended we allow the institutions to determine appropriate training and one asked that training topics be suggested, not mandatory. Several others suggested we simply require director training and development programs, instead of specific topics, stating that the rule curtails flexibility in determining training needs. One commenter said that the provision is unnecessary because director training is already an accepted responsibility of the System. Another commenter remarked on the difficulty in making a director take training. One commenter agreed that training for new directors and their role should be completed within the year, but training for other directors should be left to the board's discretion. Two commenters stated we have sufficient ability to evaluate training when conducting our Capital, Asset quality, Management, Earnings, Liquidity, and Sensitivity to market risk (CAMELS) review and we can make recommendations when those findings occur, eliminating the need for a rule.

We continue to believe that director training is an essential component of good governance and the System's safety and soundness. However, we are persuaded by commenters that the facts and circumstances of each institution vary sufficiently to make specific training requirements useful in some instances and possibly irrelevant in others. Consequently, we have amended the rule by eliminating reference to specific training topics. We have further modified the rule to require the establishment of director training policies and implementing procedures. We believe it is more appropriate for institutions to identify their own training needs, becoming more proactive in considering how to improve their CAMELS review, rather than waiting for examiners to identify training deficiencies. We encourage institutions to coordinate director training with desired director qualifications to facilitate the ability of incumbent directors and YBS borrower-director candidates to meet those qualifications. The rule retains the requirement that new directors receive orientation training within the first year of becoming a director and that incumbent directors receive periodic training.

2. Board Evaluations [§§ 615.5200 and 618.8440]

We received 62 System letters generally supporting board self-evaluations, but 38 stated that a regulatory requirement was unnecessary. Fourteen of these stated that institution boards should determine their own best practices for self-evaluations, or be allowed the flexibility to choose the type and breadth of self-evaluations based on local needs. Another 10 commenters were against a rule requiring board evaluations, stating that their boards already conduct self-evaluations, which are an internal matter, making a regulation unnecessary and burdensome. Some commenters also claimed self-evaluations are redundant since the composition of boards does not significantly change. Two expressed concern that the regulatory requirement does not specify how board self-evaluations are to be conducted, and so may not adequately measure the performance of the board. Another commenter expressed concern that the evaluations will expose those directors who are slow to catch on or refuse to seek training. The FCC characterized the provision as ''arbitrary'' as self-evaluations alone will not improve a board's effectiveness. They also challenged the necessity for the provision based on the actions of other regulators, stating they knew of no other regulator requiring self-evaluations. They further objected to the provision since no recognition of existing safeguards already in place was given, such as FCA Standards of Conduct regulations. The FCC contends that without this recognition, an implication that ''something more is needed'' is made.

We agree that the institutions should determine the manner of conducting self-evaluations, which is why we did not specify the method and manner of conducting evaluations. Whatever method is selected, the goal of self-evaluations is to help a board identify its strengths and weaknesses and improve its own performance, especially in light of current and anticipated economic circumstances. Board self-evaluations are a tool for boards to enhance their effectiveness and should be conducted in a manner that best supports the board's strategic planning and oversight responsibilities. In our view, whether or not a board's composition changes does not alter a board's performance and does not make evaluations of that performance redundant. Even if the board composition does not change, the economic circumstances and related risks facing each institution change each year, sometimes dramatically. We also do not agree that System institution boards should not undertake self-evaluations because other regulators do not have similar standards; nor do we agree that a regulatory provision is not needed. Board self-evaluations are recognized as a best practice and we find that board evaluations are a necessary and essential component to an institution's strategic plan. Evaluations identifying board strengths and weaknesses, opportunities and challenges, and how the board plans to address those issues add value to the strategic planning process.

Commenters stated that regulations on this issue are not necessary because FCA already evaluates the effectiveness of management and the board in our examination process. These commenters also stated that we have the authority to recommend actions when an institution's board of directors is not functioning properly without a regulatory provision. The fact that we examine a board's effectiveness during an examination does not relieve each institution board of the responsibility for its own review of its performance. While there are existing safeguards present in System operations, none are designed to replicate or obviate the need for board self-evaluations as evidenced by the significant number of commenters who stated that their institutions are already conducting board evaluations. These evaluations are a useful planning tool for salaries, board committee membership, training, and other areas.

Other commenters stated that board evaluations do not belong in the business plan, but should remain under the control of the board. Some of these commenters explained that because the business plan is a tool for communicating with senior managers and others, candor in the evaluations may be lost. One commenter stated that

our rule language could be read to be a requirement that the self-evaluations themselves be included in the strategic plan, expressing concern that the value of the evaluations would be lost if widely circulated. Others asked us to clarify if the evaluations must be included in business plans or if the board can make a general statement verifying the evaluations were done. The rule at § 618.8440(b) has been modified to clarify that the strategic plan must assess board needs based on a review of the annual board self-evaluations. The plan does not have to include the self-evaluation itself. We do, however, require at § 611.325(c) that a summary of the evaluations be given to the institution's nominating committee when requested.

Thirty-three System commenters expressed concern with the requirement that the self-evaluations occur annually. Many suggested conducting evaluations every 3 years or, at the most, every other year. Others suggested allowing boards to use their discretion to determine when and how often self-evaluations are needed. One commenter suggested delaying implementation of the rule to give boards time to develop meaningful programs, while another explained time was needed to implement findings from the previous year. A separate commenter advocated a cyclical format instead of a date-specific rule. We continue to believe that an annual evaluation is best because it coincides with an institution's annual planning and reporting cycle. It was for this reason we included consideration of the annual board self-evaluations as part of the 3-year operational and strategic business plan. This combined review is appropriate to ensure a complete assessment of the institution's risk environment, its strategic and operating plans, and its fiduciary and oversight responsibilities.

3. Outside Directors [New § 611.220]

In our proposed rule, we referred to recruiting outside directors. Several commenters said that System institutions do not recruit directors as System institutions must keep a neutral position in electing directors. The process for selecting outside directors is not subject to the referenced constraints on institution neutrality because outside directors are not elected by the voting stockholders but appointed by an institution's board. Therefore, referring to recruitment of outside directors, as well as conducting recruitments, is acceptable. Despite this, we have replaced the term ''recruit'' with ''select'' in the outside director provision of the rule in response to these comments.

One commenter said our language on outside director eligibility could be interpreted as forbidding a current outside director from being reappointed for a second term, suggesting we amend the rule to state that no candidate for an outside director position may be a director of any other System institution. We are not changing our rule, but clarify that an outside director may be reappointed for a second term as long as he or she has not acquired any of the prohibited affiliations with the System beyond that of his or her existing role as an outside director for that institution.

a. Expertise and Number

i. Financial Expertise

We received 161 System comments on requiring an outside director to be a financial expert. Thirty commenters agreed with the rule based on the current business environment. Commenters agreeing with the rule stated, however, the authority of each institution board to decide its own needs must be preserved. Most of the commenters disagreed with some aspect of the proposed requirements and others requested clarifications. Of the comments disagreeing with the provision, 79 stated there was no need for a financial expert on the board or to name any director as an expert. Some commenters considered a financial expert as unnecessary, stating boards don't need directors who are accountants. Other commenters stated that all directors become financial experts during their service on the board or have some financial understanding. Additional commenters expressed concern that a financial expert may not be suitable as he or she would not be familiar with a cooperative lending operation. A few other commenters stated that outside directors are needed for other areas of expertise besides financial skills, stating we should not restrict the requirement to financial expertise. One commenter questioned the value of a director expert while others said the requirement ''insults'' existing board members. Another commenter stated that a director's duty of care cannot be legislated and there is little sound logic in requiring financial expertise, while yet another commented that general business expertise is more valuable because good directors are generalists. A few other commenters stated that having a director with financial expertise is an attempt to add a sixth layer of review on financial operations. These commenters stated the audit committee, external auditor, and FCA exams all serve as reviewers of finances, making a financial expert on the board redundant and unnecessary. A separate 13 commenters stated that we should not be dictating board composition. Two commenters explained that too many specific qualifications cuts out too many good candidates. One remarked that because of the cooperative process, it will be difficult to find financial expertise in membership, making it difficult for elected members to meet our proposed definition.

We continue to believe that a financial expert is a necessary resource for System institution boards given the financial focus of System business activities and the increasingly sophisticated business environment in which they operate. Having financial expertise available within each board broadens the board's collective knowledge, improves its independence from management, and promotes its ability to carry out its fiduciary responsibilities for System stockholders and investors. Boards of directors need financial skills to carry out their fiduciary duties, as well as monitor management's reporting and disclosure responsibilities and treatment of the institution's assets. Boards must have information available to them that is not from the individuals or firms producing the financial information being reviewed. A board should, from its own resources, be able to question and evaluate the reports prepared by accounting firms and management. Regulatory examinations are not a substitute for a board's financial management and oversight. The safety and soundness of the institution's operations directly relates to the financial management of resources. The board's oversight of those same resources must come from a knowledgeable base. Requiring institution boards to have a financial expert provides a necessary, constant on-site source of financial information. We also point out that we do not require a board be comprised solely of financial experts. System institution boards need a broad mix of skills and expertise to adequately carry out their duties and we recognize the important contribution each board member makes. We agree with commenters that the institution boards are in the best position to decide these other areas of need. Therefore, we have changed the rule to require that all outside directors have some or all of the desired director qualifications identified by each institution's board under § 611.210(a) of this rule.

Twenty commenters objected to the term ''financial expert'' and two others expressed concern that our definition was more restrictive than the SEC and not an objective standard. Commenters also stated that no other regulator requires a financial expert on the board, asking why the System should be subject to a different standard. One of these commenters specifically remarked that the SEC only requires disclosure of whether there is an expert and does not require there to be one on the board. Another commenter questioned whether we had a compelling policy reason for requiring board expertise when other regulators do not. Another 20 commenters challenged our authority to issue regulations on the subject, stating the requirement goes beyond statutory requirements as the intent of the Act was to allow the institution, not the regulator, to decide what expertise is needed. Two commenters stated there was no need for us to interpret or issue regulations on board expertise to carry out the Act, nor to look at the legislative history of the Act. Many commenters stated that expertise may be more valuable to some institutions than to others, so selection of an expert should be done without regulatory qualifications. An additional 54 commenters suggested that expertise not be limited to outside directors, explaining that elected directors should be allowed to satisfy the requirement.

We recognize that other regulators only require disclosure of whether there is a financial expert on a registered entity's board, with an explanation of why one is not there. We point out that the entities subject to these regulations have boards that are predominantly composed of company management rather than stockholders. This is an important distinction, as these boards are more likely to include directors with financial experience due to their dual role within the company. Also, the December 2004 Moody's Investors Service's ''Corporate Governance Assessment: Update'' on the System identified the low level of financial expertise among System directors as a key area of concern. Our objective is to ensure each board has the tools necessary to carry out its oversight of financial reporting responsibilities. Thus, we continue to require each institution board have a financial expert on, or available to, the board. However, we agree that any director with financial expertise should be able to fill this role and have amended the final rule by removing the requirement that at least one outside director be a financial expert. Instead, § 611.210(a)(2) requires that each board have a director who is a financial expert as defined in the rule. In consideration of the difficulties smaller associations may have in locating available director-candidates who satisfy the definition of a financial expert, we have given these institutions the alternative of retaining an outside advisor. Those institutions with less than $500 million in total assets may, at their choice, retain an outside advisor to the board who is a financial expert. The financial advisor must report to the board and not institution management. Further, the financial advisor must have no affiliation with the institution's management or its external auditor. We believe this option for small institutions provides an acceptable source of financial expertise given the institution's size and financial complexity, without compromising our efforts to protect the safe and sound operations of the System.

Two commenters requested we reconcile the definition of financial expertise with the term financial expert used for the audit committee proposals. Another commenter asked that we reduce the requirement from expert to expertise, allowing greater recruitment opportunity. This same commenter asked us to define what constitutes financial expertise. Ten other commenters requested we define expertise more broadly, with seven suggesting we include business experience in the definition. One commenter stated our definition was too broad. Another commenter suggested expertise should be determined by an association's credit quality, capital position or other CAMELS rating factors instead of the manner of selection to the board.

We are modifying our definition of a ''financial expert'' and removing the definition of ''financial expertise'' from the audit committee provision for banks and associations. We are also removing the definition of ''financial expert'' from the outside director provision based on other changes to the rule. When proposing the rule, we intended the terms to be comparable, but no longer require the separate reference in the audit committee section. Instead, we include a definition in § 611.210(a)(2) of this rule, dealing with board qualifications. This definition replaces the definitions we proposed for a second outside director and Farm Credit bank and association audit committees. We have also adjusted our proposed definition of financial expert by linking expertise to the accounting and financial reporting issues that may occur within the individual institution. Each institution will now determine who is a financial expert based on its own specific financial complexities, resulting in a higher degree of expertise for institution's with more complex financial operations. We believe the modified definition clarifies that we aren't trying to place accountants on the board, but seeking to assure each board has an appropriate level of financial expertise available to it. We decline the request to expand the definition of ''financial expert'' to include business experience because it is not in keeping with our safety and soundness concerns. We point out that we have not used this definition for the System Audit Committee (SAC). As explained in section V.E.1.b. of the preamble, the SAC requires greater financial expertise because of its role on behalf of the entire System.

Twelve comments were made on the impact to board size that would occur from requiring an expert director; with 11 stating that incumbent directors would have to resign to keep the current board size. Some commenters pointed out that by requiring an outside director be a financial expert, the proposed small institution exemption for having two outside directors is canceled. A further 34 System commenters requested the size of the institution be a consideration in making such a requirement, suggesting a $500 million threshold. We are not providing a small institution exemption to the requirement for board financial expertise. Because of the changing nature and increasing complexity of the financial services marketplace, we believe all System institution boards must have at least one financial expert available to it. This promotes an institution's ability to carry out its fiduciary responsibilities to its stockholder-owners, helps to ensure the institution is functioning in a safe and sound manner, and creates greater confidence in a board's ability to exercise its financial oversight responsibilities. We also believe the changes we have made in who may qualify as a financial expert sufficiently address concerns on board size.

The remaining commenters expressed neither agreement nor disagreement for the provision, but remarked on the cost of complying with the requirement, questioning the benefit received or explaining it would be expensive and difficult for smaller institutions to comply. One commenter expressed concern that recruitment may be more difficult as the label ''expert'' holds a director to a higher level of safety and soundness and most candidates are not willing to assume the higher risk, at least not without higher compensation. We recognize that for those institutions

that do not already have some financial expertise on their board this may impose some extra cost, but believe the benefits of an added financial expert will more than offset the costs incurred. We also believe allowing any director to fill this requirement and providing smaller institutions the opportunity to use an advisor, as well as the change in defining financial expertise, will mitigate some of the costs of this requirement, particularly for smaller institutions. Further, we do not agree that the requirement for a financial expert increases or alters existing board responsibility or liability. Since boards already have oversight and financial reporting responsibilities, we see the requirement for board financial expertise as an essential cost of doing business, a protection of stockholder, investor, and public interests, and a means of potentially mitigating board liability.

One commenter asked us to clarify if this section applies to the Funding Corporation. The rule clearly reads that the provision applies only to Farm Credit banks and associations. We did not extend the requirement for a financial expert to the Funding Corporation because the Act already places sufficient expertise requirements on the Funding Corporation board.[14]

ii. Number of Outside Directors

We received 146 letters on our proposal to require institutions with more than $150 million in assets to have at least two outside directors. Two System commenters agreed with our proposal, stating that all System institutions would benefit from increasing the number of outside directors. One member of the public supported increasing the number of outside directors on the board, stating that 50 percent of board members should be members of the public who have no financial ties to the System. One commenter asked that we suggest increasing the number of outside directors, not mandate it, while another asked that we remove the small institution exemption. One commenter asked us to explain the benefit of having two outside directors. Another commenter asked that the rule allow exceptions to ensure all director terms are staggered. One commenter expressed concern that a requirement to have two outside directors would create a significant non-elected director presence on the board. A couple of commenters stated that we arbitrarily picked a number instead of considering the costs and talent of existing boards.

Many commenters disagreeing with the provision stated that requiring smaller institutions to increase the minimum number of outside directors could be costly, pose recruitment difficulties, and dilute the influence of stockholder-elected directors. Most of these commenters requested we increase the small institution exemption to $500 million, similar to that of other financial regulators. Several other commenters suggested a $750 million or $1 billion exemption. A public commenter stated the $150 million exemption is too low, that a better level would be $1 billion. A System commenter stated our exemption was too low, referencing the RFA small entity definition and the Federal Deposit Insurance Corporation (FDIC) asset-size criteria. The commenter stated the RFA has size categories of $0–100 million, $500 million to $1 billion, $1–5 billion, and over $5 billion in recognition that one standard is not equitable for all. The commenter claimed smaller associations would be penalized if they had to comply with the same requirements of a $7 billion institution. A separate commenter suggested that we use a percentage of membership rather than asset size, explaining only 10 percent of the board should be outside directors. Another commenter suggested we have boards comprised of 70-percent elected directors. A couple of commenters asked us to consider the differences among institutions in product and service areas before requiring more directors. Two commenters objected to an exemption, with one explaining that one small association that is unstable could represent more of a threat to the System than a larger institution in sound condition. The other expressly objected to a requirement being applicable solely because of asset size or loan volume.

We do not believe that suggesting, instead of requiring, an increase in outside directors is sufficient to satisfy our objectives. System institutions operate in a rapidly changing economic environment, requiring more skills and broader board representation. We are convinced that a regulatory requirement for greater outside director representation is necessary to preserve the System's safety and soundness. However, we agree the proposed $150 million exemption level is too low given the costs and recruitment difficulties in smaller associations. We adjusted this rule to increase the exemption to $500 million, specifying that this exemption applies only to associations. All Farm Credit banks must have at least two outside directors. We selected a minimum number of two outside directors because we have observed the positive effect that two outside directors can have in System institutions, outweighing the added costs for larger institutions. By increasing the small institution exemption to $500 million, 10 percent of the System's assets are not covered by the requirement for a second outside director. We considered the other levels suggested by commenters when raising the exemption to $500 million. We do not believe a $750 million to $1 billion exemption would produce significant benefits, especially since a $1 billion exemption would exclude almost 75 percent of System institutions. We also do not believe using business activity is adequate, given normal business fluctuations or current changes in board size. We also do not agree with the commenter that suggested 50 percent of the board be members of the public. Congress expressly created the System as a cooperative, which requires borrower-controlled boards. In addition, no association is required to create a second outside director position when doing so would reduce the stockholder-elected director membership to less than 75 percent. For example, an association with over $500 million in assets and a five-member board would only have to have one outside director. Each Farm Credit bank and association is required by the Act to have at least one outside director; our rule is not to be construed to allow otherwise.

Many commenters objected to the proposed change on the basis that we exceeded our regulatory authority. One commenter stated that we were amending the Act by our rule. Still another commenter stated that the Act's sole check on outside directors is that there be one and our rule infringes on the flexibility provided by Congress. A commenter stated the Act does not direct or allow us to fix the number of outside directors. A few commenters questioned whether we had a compelling policy reason for taking the determination of board size and composition away from institutions. We have sufficient authority to regulate the number of outside directors. The Act establishes a minimum number of outside directors and directs us to issue rules necessary to protect the safety and soundness of the System. As explained above, requiring at least two directors of Farm Credit bank and large System association boards to be independent of the System is desirable and proper given the increasing complexity of today's business environment and the size of

[14] Section 4.9(d) of the Act (12 U.S.C. 2160).

the System institutions that are involved.

As mentioned earlier, some commenters suggested that only 10 percent of the board should be outside directors. One commenter expressed concern against creating a significant non-elected director presence on the board, while another commenter suggested we have boards comprised of 70-percent elected directors. We proposed requiring the majority of a board be composed of stockholder-elected directors, but agree with specific comments on this area that more than a simple majority is required to preserve the cooperative structure of the System. We are therefore finalizing the provision to require at least a 60-percent stockholder-elected director board composition.

b. Terms of Service and Removal

We received 133 letters on the terms of service and removal of outside directors. One commenter objected to the terms of service provision, stating that it is a matter left to the boards, while the remaining 132 commenters objected to requiring a majority vote of all voting stockholders to effect removal of an outside director. A few commenters expressed concern that removal for cause might conflict with the existing requirements of § 611.310(b), which mandates removal of any director under events prescribed in that section. One commenter agreed with the reasons for removing an outside director outlined in the rule, but stated that a rule is not necessary since the Act is clear on the issue. Another remarked that if cause exists for any director, the director should be removed automatically. The commenter explained that the outside director should be subject to the same removal provisions as stockholder-elected directors and not be provided more protection for wrongdoing. One commenter stated that the board should be able to remove any director at will, while another commenter asked if we meant a director could not be removed at the end of their term absent cause. Still another commenter asked why the System was being held to a different standard than the commercial banks.

We are finalizing the rule without the removal for cause provision. The rule requires those institutions seeking to remove a director before the expiration of his or her term to document the reason for removal. We believe our changes elsewhere in this section, and the existing requirements of § 611.310(b), provide sufficient protection to the independence of outside directors discussed in the preamble to the proposed rule. Moreover, we reaffirm our position that the terms of service and basis for the removal of an outside director be the same as those for directors elected by the stockholders.

A significant number of commenters noted that holding a stockholder vote for removal could produce a chilling effect, unwanted publicity, and possible lawsuits. They remarked that the requirement does not advance the cooperative principles of the System and that a regulatory requirement is unnecessary. Other System commenters remarked that due to the requirement that a director be removed for cause, the further protection of a stockholder vote is unnecessary. One commenter stated that stockholder votes for removal do not necessarily protect the interest of the institution and another commenter stated that any stockholder involvement in the removal of outside directors is inappropriate under basic cooperative principles. Another commenter stated that presenting a director to stockholders for removal and having stockholders reject the effort would create unmanageable tension on the board. Some commenters noted that the requirement for removal of the outside director by stockholder vote was more onerous than removal of an elected director, suggesting that removal requirements should be similar for both types of board members. A public commenter stated that requiring a majority vote of voting stockholders for removal is excessive; instead suggesting that removal for cause be done by elected directors and that stockholders should be able to remove an outside director for any reason. Other commenters pointed out that under corporate law the one hiring a director has the authority to fire a director. Others suggested requiring a board supermajority vote of two-thirds, stating it should be sufficient to provide protections against unjustifiable removal, while still others recommended a simple majority vote of elected directors. One commenter, when discussing their objections to the provision, suggested disclosing the reason for director removal in the AMIS as a means of accountability to stockholders. Many commenters asked us to clarify if we meant a majority of stockholders voting.

We are not withdrawing from the rule the authority of stockholders to remove a director. While we agree with commenters that corporate law generally recognizes the authority of the hiring official to fire those hired, we note that corporate law also recognizes a board gains its authorities from the stockholders it represents. However, we agree that restricting removal of an outside director to stockholder action in all cases may be excessive and could produce undesirable and unintended consequences. The final rule allows for the removal of an outside director by either stockholder action or by a two-thirds vote of the full board of directors. We caution that no institution may forbid stockholder action to remove any director, elected or otherwise, nor make burdensome procedural requirements on such stockholder action. Further, we make it clear that a full board vote includes all directors, no matter what their means of selection to the board, except for the individual outside director the board is seeking to remove. Any director, other than the outside director up for removal, must be allowed to vote in the removal action. We are not adopting the suggestion that board removals be disclosed in the AMIS.

In response to several comments, we have clarified in all appropriate areas of the rule that voting stockholders mean all voting stockholders voting in person or by proxy. We did not intend for the proposed language to be interpreted as requiring a majority vote of all stockholders eligible to vote, regardless of whether they actually voted. However, commenters read the language as requiring such, leading to our clarification. We also received one letter from an association asking we rescind Bookletter 009 (BL–009) on outside director terms of service. We will review, and possibly revise, BL–009 after publication of this rule.

4. Board-Selected Inside Directors

The proposed rule would have created a board-appointed inside director position, without requiring an institution to have such a position. We received 89 System comments on this provision, with most indicating various levels of support, but objecting to limits being placed on the position. A minority of commenters objected to creating the position, stating it violated the cooperative principles of the System and was not needed as the board has enough authority to satisfy diversity with current elected and outside director positions. Commenters stated that such a position carries a significant cost to smaller associations. Commenters supporting the position requested less stockholder involvement and more board control in determining board composition. Thirty commenters objected to requiring a stockholder vote on a bylaw provision creating the position, stating bylaws are the prerogative of the board and stockholder

direct involvement will not further cooperative principles. Alternatively, some commenters agreed with a bylaw vote by stockholders. Thirty-three commenters asked that the 5-year cooling-off period be removed or reduced, with a few suggesting reduced cooling-off periods to 1, 2, or 3 years. While many commenters agreed with the proposed requirement that the number of appointed inside directors be limited to no more than two, others objected to a limitation. Twelve comments asked that the position be open to more than just stockholders.

We are not including the board-appointed inside director provision in the rule. The System's cooperative nature is designed to ensure that the stockholders elect the board, with minority representation from appointed directors. We proposed the restrictions on board-appointed inside directors as a means of balancing the public policy goal for diversity in board representation with the stockholder-controlled structure of the System. However, we believe our stated public policy purpose of facilitating diversity on institution boards is achievable through stockholder action, using existing authorities in the Act, and does not require FCA to adopt this provision. In conformance with our removal of the proposed board-selected inside director position, we are also withdrawing the proposed technical changes on this issue from § 615.5230.

C. Election of Directors

1. Director Candidate Campaigns

a. Director Candidate Campaign Material [§ 611.320]

We received 13 System comments, with 10 supporting the clarifications we made to our existing rule, explaining the importance of institution impartiality in the election process. The remaining commenters suggested exceptions to the rule, including allowing institutions to pay for one mailing of campaign material on behalf of each director candidate and allowing a candidate statement to accompany the director election materials, provided all candidates have equal opportunity to submit statements. One commenter asked for clarification on whether the existing rule allowed associations to pay the expenses of its candidates to bank boards. Another commenter asked if releases from the impartiality provisions of our rule could be requested from candidates, thereby allowing institutions to distribute candidate campaign material.

We final this section of the rule as proposed. We believe the rule is clear that no Farm Credit institution is allowed to distribute campaign materials, regardless of who bears the expense or the equality of access to the opportunity. An institution must also maintain neutrality in distributing the director-candidate disclosures required by § 620.21. To comply with § 611.320, those disclosures must not contain campaign materials, nor may they contain candidate statements. The election process must be free from even the appearance of an institution endorsing a director-candidate. Institutions are stockholder-owned and controlled; therefore, candidate endorsements are inappropriate. Additionally, candidates may not be asked to waive the requirement for impartiality provisions, nor may an institution pay its director-candidate's election expenses.

b. Release of Stockholder Lists [§ 618.8310]

We received 21 System letters expressing concern with confidentiality, identity theft, and enforcement in releasing stockholder lists to stockholders, even if for permissible purposes. Some commenters remarked that without further controls, the recipient's agreement to use the list only for permissible purposes is unenforceable. One commenter suggested an institution be allowed to add conditions to the release of a list, such as requiring its return after the need has been met, to protect confidentiality. Another commenter stated that it is not in the best interest of all stockholders to release the lists without further controls or confidentiality agreements because the list could be sold for financial gain. Some commenters asked that the requirement be removed entirely. Yet another commenter asked that the list not include the classes of stock held, explaining it won't make a difference to the requester what type of stock is held by others. A separate commenter stated that a stockholder list should refer only to voting stockholders, and not all stockholders, because banks cannot ascertain what outside institutions might be holding their preferred stock at any given time.

Stockholders have a right under the Act to obtain a list of the stockholders in their institution(s). Section 4.12A of the Act requires banks and associations to provide a current list of stockholders within 7 days of the request. Additionally, the Act provides for restrictions on the use of the lists, which we further clarified in our rule. We continue to believe that the certification a requesting stockholder must sign sufficiently addresses the confidentiality and privacy concerns raised. Further, because section 4.12A does not distinguish between voting and nonvoting stockholders, the rule specifies that a list of stockholders consists of each stockholder's name, address, and classes of stock held.

One commenter asked for clarification on who is included in the list of Farm Credit bank stockholders. The commenter remarked that banks, in providing lists of their stockholders, should also provide a list of directors of each association rather than just a list of the associations in the district. Section 4.12A of the Act does not require a bank to provide a list of their affiliated associations' stockholders to a requesting bank stockholder. However, § 620.5(h) requires each association to disclose in its annual report the names of all its directors. Anyone wishing to obtain these names may request a copy of the report from the association.

2. Director Candidate Disclosure [§§ 615.5230, 620.20, 620.21, 620.30, and 620.31]

We received 33 System letters addressing this provision. Many of the commenters objected to standardizing election procedures for banks and associations, specifically as it relates to floor nominations and the frequency of director elections. A few also objected to the perceived requirement that nominating committee reports be disclosed. Still others objected to detailed candidate disclosures. Eight commenters objected to imposing the election requirements of the AMIS on banks, with several suggesting that we reevaluate the need for election consistency between banks and associations. One specifically objected to requiring banks to accept floor nominations as banks do not currently permit floor nominations. The commenter went on to ask that if we issue the rule with this requirement, that the rule be reproposed and additional comments allowed. Another commenter expressed concern that the proposal would limit the open nomination process it currently employs. We also received, through our regulatory burden initiative, suggestions that we reduce the reporting requirements of the AMIS and eliminate requirements linking director elections to annual meetings. A commenter stated that the considerable costs in preparing and mailing the AMIS are not justified by the marginal benefits derived by shareholders.

We agree, in part, that the banks should not be required to follow all of the director election procedures that

associations follow. As such, we have amended our rule to restore the existing floor nomination requirements for associations, but added language requiring Farm Credit banks to state in the AMIS whether they are allowing floor nominations. We also make clarifications that an AMIS must be issued prior to any director elections or any annual meeting. We make this change because not all director elections occur at the annual meeting, such as interim elections held to fill vacancies on a board.

Eight commenters stated that the full report of the nominating committee should not be included in the AMIS because it reveals too much of the deliberative process of the committee. We are not requiring that the full nominating committee report be released. The rule at § 620.21(d)(2) requires a description of the nominating committee efforts to locate two candidates; it does not require that the full nominating committee report be provided to voting stockholders. It is up to the institution to decide the manner in which that information is included in the AMIS. We only require distribution of complete nominating committee reports to the board of directors in § 611.325.

Three commenters objected to candidate disclosure statements being included in the election materials sent to voting stockholders, but two other commenters supported it. One commenter limited their objection to the prohibitive costs involved in complying with the requirement. This commenter asked that we keep the existing provision allowing associations to summarize candidate disclosures. Although our existing rule requires Farm Credit banks to provide complete signed copies of candidate disclosure statements, we find the argument regarding the prohibitive costs persuasive and are amending our rule to give institutions the option of providing complete copies or standardized summaries. The rule, however, clearly states that candidate disclosures, in full or summary form, must be distributed with the ballots.

Seven commenters expressed concerns on the specificity of candidate disclosures, suggesting we limit personal addresses to the town and state of residence. One commenter stated that the AMIS should not include identification of any candidate's familial relationships reportable under part 612. We agree that a candidate's residential city and state are sufficient for voting stockholders to consider geographic and regional representation. We have replaced the requirement for personal mailing addresses with a requirement for the city and state of residence. However, we disagree with the commenter requesting no disclosure of potential conflicts of interest. Because director candidates are seeking a position of trust in representing stockholders' interests, this information is clearly within stockholders' right to know. This disclosure of possible conflicts of interest by candidates outweighs the inconvenience and privacy concerns stated by the commenter.

One comment made under our regulatory burden initiative asked that we allow director candidate disclosures to be made in the AMIS or the annual report. We are not using this suggestion because annual reports and elections do not always coincide. The AMIS updates director and financial information provided in the annual report and includes candidate disclosure information that may not have been prepared when the annual report was published. We believe the AMIS, in order to be a valuable source of information for voting stockholders, must contain current information. We also make minor technical and grammatical changes to this area of the rule due to creating distinctions in association and bank election procedures.

3. Nominating Committees [New § 611.325]

We received a total of 104 System letters on this issue. Generally, most commenters supported the need for an open and fair nominating procedure; however, comments on how to achieve that objective varied widely. The majority of comments focused on bank nominating procedures. Commenters focusing on association nominating procedures generally sought clarification of existing requirements or modifications to suit their particular needs and interests. Other commenters were generally satisfied with existing procedures and could see no benefit to the proposed changes.

a. Bank Nominating Committees

Several commenters supported the need for changes in the current nominating process for both banks and associations. Many expressed dissatisfaction with existing bank nominating procedures, making it clear that nominating procedures vary widely from one bank to another. Other commenters specifically supported a defined district bank nomination process allowing all associations to participate in selecting candidates. These commenters asked that the process not be too regulated though. Yet others supported current bank nominating processes and expressed concern that our rule would place power with the larger associations. The FCC stated that the Act does not require nominating committees for banks and we should not require such as each bank has adopted its own process that ''works well for them.'' Other commenters stated that Farm Credit banks should not have to conform to the same nominating procedures as associations. Reasons ranged from Farm Credit banks not electing directors at annual meetings to banks requiring flexibility to choose from several different election processes, such as committees selected by the board or nominating ballots. Another reason given by commenters was that banks are treated differently in the Act so our rules should treat them differently. One commenter stated that the current regulations on nominating committees were appropriate, remarking that the rule might restrict access to the nomination process. Another commenter objected to requiring nominating committees for banks, stating the rule would limit all associations from participating in nominating candidates. This commenter further stated that the rule would put the nominating process in the hands of individuals who are not stockholders of the bank and have little or no stake in ensuring a highly qualified board. The commenter then asked that we craft the rule to make nominating committees permissible for banks, not mandatory. One commenter stated we should not require banks to use nominating committees at all since commercial banks are not required to have them.

We continue to be convinced that Farm Credit bank nominating committees are appropriate and enhance the process for identifying stockholders to run for bank director positions. Section 4.15 of the Act tasks us to issue regulations governing the election of bank directors to assure a choice of nominees for each elective office to be filled. Although we crafted our rule in more general terms to allow banks some flexibility in bank director nominations, we are concerned that an incumbent bank director may run unopposed for re-election because there is no central accountability point in the bank nomination process. We also note that while the current director nomination and election practices of the banks vary, some stockholders in the banks may not be given equal opportunity to nominate viable candidates. Therefore, the rule requires banks to have nominating committees elected by the voting

stockholders voting, in person or by proxy. We also encourage Farm Credit Banks to address the selection of nominating committee members to alleviate the concerns about unequal opportunity expressed by some commenters.

b. Term and Selection of Committee

A commenter asked that we not require the selection of nominating committees at annual meetings. The commenter stated that the committees should be selected at any time, and in any manner, that suits the institution. Some commenters requested more than a 1-year term of service for nominating committee members as a way to improve efficiency for the nominating process; a few suggested staggered terms of 2–3 years. One commenter also asked that nominating committee members face opposition to prevent unwarranted re-nomination and that committees receive training. Another commenter remarked that our rule gave very little attention to the process of selecting the nominating committee. One commenter stated that nominating committee members should be eligible to be nominated from the floor.

We recognize that some banks do not conduct all director elections at annual meetings and have removed this provision from the final rule. We also removed language from the rule requiring all nominating committees to serve for 1 year. This, however, does not relieve associations of the requirements of section 4.15 of the Act. Section 4.15 of the Act requires each association to elect a nominating committee at the annual meeting to serve for the following year. We are declining to issue rules on the manner of selecting a nominating committee or requiring training for committee members. We believe this is best left to the judgment of each institution. We note, however, that the rule does not prohibit floor nominations for a person's candidacy to the nominating committee.

One commenter stated that the requirement prohibiting elected directors to serve on the nominating committee is counterproductive and overreaching, particularly at the bank level. One commenter suggested that retired board members be allowed to serve on the nominating committee. Another commenter stated that we should allow retiring directors, who aren't candidates for re-election for the coming year but are still serving as directors, be eligible to serve on the nominating committee. A few commenters stated that we should allow nominating committee members to become director candidates as long as they resign from that committee. One commenter supporting the restriction on candidates serving on the nominating committee asked us also to address the conflict of interest created when family members of a candidate serves on the nominating committee.

We continue to believe that an open and fair nominating process must be free of potential conflicts that could result if sitting board members serve on nominating committees. A director who is not fully retired from the board may not serve on the committee if he or she is still a director at the time of service on the committee. In taking this position, we are mindful that a ''retiring'' director may decide to run again for election to the board. However, a retired board member is sufficiently removed from obvious conflicts to serve on the nominating committee. We also disagree with suggestions that director candidates be allowed to serve on the nominating committee. Nominating committee members may not be candidates for director positions during the same election cycle. While we understand that a person elected to the nominating committee may decide during the course of service to run for a director position, it is inappropriate for the person to continue as a nominating committee member because he or she now has a conflict of interest as well as access to information on other candidates not generally available. In such an event, the member has a duty to defer candidacy until the following election cycle. We share the concerns of the commenter regarding family members of a candidate serving on the nominating committee and leave it to each institution's board of directors to develop, consistent with our conflict of interest regulations, a written policy on this issue.

c. Duties

One commenter raised concerns that increasing committee duties and time commitments will reduce the willingness of stockholders to serve on the committee. One commenter expressed concern that the rule would prevent stockholders from seeking election due to the nominating committee selection process. Another commenter asked that we remove restrictions on directors and employees assisting the committee in identifying candidates. A separate commenter stated that nominating committees should operate independent of institution management. We also received a comment stating it is unproductive to require all director-candidates to have opposition, especially when no interest is indicated. Still another commenter questioned if the committee could nominate someone who was unwilling to serve.

We agree that locating at least two willing and qualified candidates for each open board position may be difficult and our rule does not require two nominees. Our rule instead requires nominating committees to document their efforts when unable to find two nominees. We do not agree that the nominating committee selection process will deter willing and able candidates from seeking election to the board. To the contrary, we believe that the transparency will facilitate the efforts of stockholders who might be interested in seeking elective office. We also clarify that nominees must be willing participants. A nominating committee cannot nominate someone unwilling to be a director in the institution. Likewise, nominating committees cannot rely on employees of the institution to locate nominees. The provisions of § 611.320(b) explain the limitations with respect to the assistance that employees may offer the nominating committee.

Several commenters stated the requirement that nominating committees conduct independent evaluations may be impractical or too time consuming and some commenters asked that we remove the ''independent evaluation'' component from the committee's duties. Other commenters asked us to clarify how committees are to identify qualified candidates, how to determine suitability beyond what is in the Act and institution bylaws, and how much information the associations can disclose with respect to prospective candidates. One commenter stated that requiring the committee to use established qualifications opposes the plain meaning of the Act and frustrates Congressional intent. The commenter suggested making consideration of desirable qualifications set forth in bylaws an option for committees, not a requirement. One commenter raised confidentiality concerns if the nominating committee is provided detailed candidate information necessary to conduct its evaluation process.

We agree with the commenters concerns regarding the time burden the proposed nominating committee duties would create. In response to these comments, we have removed from the rule the requirement for an independent critical evaluation, instead requiring only an evaluation of candidate qualifications. We have also specified that the evaluation consider known obstacles preventing a candidate from performing his or her duties. We

clarified that the committees nominate, not seek, individuals who meet the eligibility requirements. As to the committee's consideration of director qualifications, we do not agree that director qualifications defeat the purpose of the Act, especially as the Act provides for qualifications to be included in each institution's bylaws. However, we modified our rule on director qualifications to express them as desirable, thereby clarifying a perceived mandatory requirement. We decline to regulate how nominating committees should fulfill their duties. While the final rule provides for a pledge of confidentiality from nominating committee members with regard to sensitive and personal information provided to them in the course of their committee duties, we leave it to each institution's board of directors to develop, consistent with this rule, a written policy on how best to treat sensitive information.

d. Resources

A few commenters objected to providing nominating committees a copy of the current operational or strategic business plan that contains the board self-evaluation, noting that it may include confidential information. One commenter asked that banks not be required to provide a list of stockholders to the committee as it would serve no purpose to give the name of an association. Another commenter asked us to define ''pledge of confidentiality'' for the purpose of providing proprietary information to the nominating committee.

We re-evaluated our reasons for providing a nominating committee an institution's business plan, finding the reasons insufficient in light of the comments received. We also removed the requirement that committee resources be addressed in institution bylaws. While we removed these requirements, we continue to require institutions to provide a summary of the current board self-evaluation when requested by their nominating committee. We also, as a conforming change, require institutions to provide their nominating committees their director qualifications policies.

D. Conflict of Interest and Compensation Disclosure [§ 620.5]

1. Disclosure of Other Business Interests

Three commenters opposed requiring senior officers to make the same disclosure of other business interests as is currently required by directors. Other comments indicated no objection to the provision, although one commenter questioned the need for a regulatory requirement. Another commenter asked for clarification on whether unpaid positions with other businesses would have to be disclosed. The three commenters opposing the change stated the disclosure was an impingement on the privacy rights of directors and senior officers and we had not claimed a failure to make such disclosures put stockholders at risk. The commenters stated the disclosure provision provided no valuable information to stockholders and was redundant of other reporting requirements. One commenter stated the Standards of Conduct Officer reports any such business interests so a regulation requiring public disclosure does not improve the process in any way.

We are making no changes to this provision of the rule. In proposing this provision, we considered the reporting requirements of part 612 and the specific business interests that could create a real or potential conflict of interest. We also looked to the reporting requirements of other regulators. We concluded that directors and senior officers, who represent stockholders in a position of trust and who voluntarily seek this position, have an obligation to disclose other business interests that may present real or perceived conflicts of interest. Whether a position is paid or not does not remove the potential conflict of interest. Therefore, both paid and unpaid business affiliations must be disclosed.

2. Disclosure of Compensation

Eight commenters agreed with reporting director compensation for serving on a board committee. We received no comments in disagreement with this aspect of the rule. We final this provision as proposed.

One commenter suggested we require the disclosure of business expenses to facilitate stockholder evaluation of the value of services received. One commenter remarked that travel expenses are not compensation. We are not changing the rule in response to these comments. We did not propose changes to disclosure of business or travel expenses, but will take the comments under advisement.

a. Noncash and Third-Party Compensation

We received a total of 82 comments on this provision of the rule. One commenter supported the provision while another requested we maintain the ''status quo.'' Most System commenters disagreed with the general provision on noncash disclosure and one expressed concern that disclosure of this type of compensation may become a deterrent to directors and officers in their interactions with borrowers and constituents. Many commented that existing regulations are fine and others commented that this level of reporting is burdensome and not cost efficient. Two commenters opposed this provision because noncash compensation is a small percentage of an association's overall budget and therefore does not require detailed disclosure. Two commenters remarked that a rule provision of this nature would create a negative impression and three others commented that the provision was unacceptable and unnecessary for stockholder disclosure. One commenter asked for justification based on safety and soundness needs. Two other commenters stated that we should be consistent with Sarbanes-Oxley and another two commented that this type of reporting puts the institution at a competitive disadvantage.

Nineteen commenters requested clarification of what we consider noncash compensation and when disclosure is necessary. One commenter asked how this level of disclosure would enhance transparency. A separate 16 commenters requested we only require disclosure of compensation received directly from the reporting institution, eliminating the third-party provision. Another 11 commenters questioned the need to report reimbursed expenses, under the assumption that third-party payments are reimbursed by the employing institution or absorbed by the third-party as a business expense. Many commenters questioned why reimbursed expenses would be considered compensation. Forty-six commenters requested we restore some threshold level for noncash compensation reporting to eliminate burdensome reporting of minor noncash items, such as the receipt of a cup of coffee. Two commenters suggested $1,500-$5,000, six others requested a level not tied to overall compensation received, one commenter requested a threshold amount based on an inflation-adjusted dollar minimum and another commenter suggested a materiality standard for noncash compensation disclosure. Eleven other commenters requested we base the interpretation of what constitutes compensation on Internal Revenue Service (IRS) rules.

We do not consider reporting noncash compensation a deterrent to normal interactions with borrowers and constituents, but important to prevent improper or excessive exchanges of noncash items. We also do not believe

that it creates a negative impression but validates the integrity of System directors and senior officers. Section 514 of the 1992 Act recognizes the benefits when directors, officers and employees of the System disclose financial information and potential conflicts of interest. The 1992 Act further requires FCA to ensure our regulations provide adequate disclosures to stockholders and other interested parties. Despite the cost and related reporting burden, both the need for transparency and the need to avoid potential conflicts of interest require that noncash compensation above a *de minimis* level be disclosed, notwithstanding the relatively small share it represents in an institution's overall budget. We also note that Sarbanes-Oxley contains no salary disclosure provision, but addresses stock and stock option compensation.

We agree that a reporting threshold would alleviate most of the anticipated reporting burdens and modified the rule to restore a threshold for reporting noncash compensation. The $5,000 annual aggregate dollar threshold applies to director disclosures and senior officer perquisite reporting. We discuss perquisite reporting in section V.D.2.d.ii. of this preamble. We are not including any adjustments for inflation at this time since the threshold is set at the upper limit of the range suggested by commenters.

We agree that adopting an IRS definition of compensation would provide consistency and facilitate recordkeeping. The IRS defines noncash compensation as a fringe benefit or perquisite. The IRS considers fringe benefits as compensation, unless the employee pays the market value of the benefits or the benefits are specifically excluded from income by law.[15] Under IRS rules, the provider of the benefits does not have to be the employer, but may be a client or customer of the employer; so a System institution would be deemed to be the provider of a benefit given to a director or senior officer if it is given for services performed on behalf of the institution.[16] We selected the IRS rules instead of a materiality rule because IRS rules add a greater level of clarity on third-party compensation. Similar to the IRS rules, our rule requires reporting as compensation the value of gifts, unreimbursed payments of trips, or use of property received from third parties, which are made to directors and senior officers for acting in their official capacity with the institution. We believe that disclosure of cash and noncash compensation and compensation from third-parties increases transparency and helps ensure that directors and senior officers are not unduly influenced. This provision was not generated out of a concern for the integrity of System directors and senior officers, but was designed to address the unwitting acceptance of items and how the receipt of such items may be perceived as a conflict of interest, adversely affecting shareholder and investor confidence. Accordingly, we are retaining the requirement for inclusion of third-party compensation. We also clarify that compensation is any unreimbursed item, as it would not be compensation if the employee reimbursed the institution or third-party.

b. Stock and Stock Options

We received 31 comments on reporting stock and stock options in the annual report. One commenter supported disclosing of all sources of compensation. Other commenters disagreed with the provision; stating the System does not compensate management or directors with stock. One commenter neither agreed nor disagreed with the provision, but suggested placing a restriction on the issuance of stock and stock option compensation instead of creating a disclosure program. Eight other commenters asked us to remove the provision and a separate nine stated they were unaware of any stock compensation. Seven commenters stated that System institutions are not able to use stock or stock options to compensate staff and one commenter expressed the opinion that it was inappropriate for us to include this provision given the cooperative nature of the System. Four commenters asked us to clarify why we included this provision in the rule, with several suggesting we require disclosure only where stock or stock options are actually received.

We are not requiring a specific disclosure of stock or stock options in the final rule. We had proposed the specific disclosure to address situations where bank and association officers serve, in their capacity as institution officers, on the FAMC board. The Act requires the FAMC board to consist, in part, of five directors elected by stockholders of System institutions (banks and associations). These individuals serve on the board of FAMC as representatives of the System and FAMC compensation of its board members has included stock and stock options. We are satisfied that the reporting of any other business interest of directors and senior officers, which would include reporting service on the FAMC board, clarifies the reason for the enhanced disclosure and achieves the stated objectives of the original proposed provision. However, we clarify that any stock or stock option received as part of a compensation package from the reporting institution would be considered noncash compensation for purposes of our rule. We strongly encourage banks and associations to inform stockholders of the availability of FAMC compensation information and that such compensation may include stock or stock options in FAMC. We believe that a Farm Credit bank or association making this type of disclosure for affected directors and officers would satisfy the intent of the 1992 Act disclosure requirements and our policy concerns.

c. Chief Executive Officer (CEO) Compensation Threshold

Ten commenters supported removing the $150,000 CEO compensation disclosure threshold. Six other commenters specifically opposed the removal of the reporting threshold for CEO compensation without further explanation. We found no basis for retaining the $150,000 minimum reporting limit and final the rule as proposed. All institutions must report their CEO's compensation, regardless of the amount.

d. Senior Officer Compensation Disclosure

(i) Individual Compensation Disclosure

We received 198 letters addressing individual senior officer compensation disclosure, with all but one opposing all or part of the provision. One member of the public supported the requirement, stating it was time System institutions provided full disclosure. The FCC stated that the existing regulation already requires disclosure of individual compensation information to stockholders upon request. They commented that we referenced disclosure as a best practice without explaining why it is a best practice, indicating that the SEC requires officer compensation disclosure for publicly traded companies because management also serves on the boards of these companies. These board members are in a position to influence board approval of compensation arrangements, which the FCC asserts does not apply to System institutions.

A few commenters remarked that the aggregated reporting enabled stockholders to determine a ''ballpark range'' of salaries. One commenter

[15] *See generally* 26 U.S.C. 132.

[16] 26 CFR 1.61–21(a)(5).

stated we were imposing Sarbanes-Oxley on institutions in a ''misguided attempt'' to satisfy others. Two commenters remarked that aggregate disclosure was sufficient as it enables the boards to evaluate the institution's operating rate and cost structure. They stated that individual compensation disclosure is not meaningful and its potential value to stockholders and investors is not strong enough to override the privacy and confidentiality interests of those individuals whose compensation would be disclosed in a public report. Some commenters stated that individual disclosure would be especially burdensome for associations. Still others commented that the information would be misused or misstated, would give competitors an edge, enabling them to lure away valuable employees, or would create employee dissatisfaction issues.

Another commenter asserted that such individual disclosures would compromise the CEO's ability to differentiate salary at the management level. Other commenters added that individual disclosure would serve no purpose other than to create distractions, animosity, and jealousy among employees. One commenter requested we consider how disclosure would interfere with the board and management prerogatives as well as individual privacy interests. Other commenters stated that individual reporting disclosure would impinge on the privacy rights of senior officers, presenting opportunities for outsiders to distort the information for their own benefit and purposes. Still other commenters stated they did not understand why we would require greater disclosure to the public when the public has no legitimate business purpose for the information. Several commenters stated that we can deal with any safety and soundness concerns regarding senior officers' salaries through our examination and enforcement functions. Another commenter asserted that concerns over the amount of compensation paid to senior officers are for the boards to handle, not us, but that we could note our concerns during the examination process. Some commenters stated that if we were to proceed with individual disclosures that it should be limited to the five most highly compensated senior officers or to follow the SEC compensation disclosure rules. Some of these commenters suggested instead that the current threshold for individual disclosure, as in the case of the CEO, should be extended to the other senior officers. One commenter stated that if we proceeded with individual disclosure we should set a dollar threshold, suggesting $150,000.

We are withdrawing this provision of the rule and restoring the existing aggregate disclosure of senior officer compensation. We instead clarify that the existing requirement for aggregate reporting includes all senior officers, plus those officers (who are not senior officers) receiving among the five highest levels of compensation. The former rule's use of the phrase ''at a minimum'' may have been read to permit reporting the top five officers' aggregated compensation instead of all senior officer aggregated compensation and any additional officers whose compensation was one of the five highest paid. As explained in the 1986 rulemaking,[17] this portion of the rule was intended to address oversights in reporting that may have resulted from a highly paid officer functioning as a senior officer but not having a formal designation as such. We are also amending the means of determining which other officers are included in the senior officer aggregate based on comments received. Institutions will be required to include in the senior officer aggregated compensation report any other officer receiving a compensation package that is among the five highest paid, not the five highest paid officers. This is different from the former rule because it focuses on the dollar amount, not the number of officers, as requested by many commenters. We believe tying the level of aggregated reporting to the compensation paid, instead of a number of officers, alleviates past questions regarding which other officers are included in the senior officer compensation report when more than five receive the same amount of compensation. We did not go as far as the commenters asked by setting a dollar threshold for the aggregation as we are mindful of compensation variances based on locality and institution business volume.

Although we are withdrawing the provision on individual compensation disclosure, we continue to believe that reporting compensation improves transparency. The objective of this type of disclosure is to provide stockholders with information to assess whether senior officer compensation is appropriate in view of the institution's financial condition and to hold the board accountable for the level of compensation paid to its senior officers. We may therefore reconsider the viability of aggregated compensation reporting in future rulemaking.

[17] 51 FR 2136, June 12, 1986.

The FCC stated that we had an opportunity to impose detailed disclosure requirements following passage of the 1992 Act yet did not do so. They stated that we failed to impose such requirements following passage of the 1992 Act, even after we had studied Congressional statements associated with that legislation. We maintain our prerogative to change the reporting and disclosure requirements when we determine there is a need. As explained in section IV.C. of this preamble, our authority to promulgate rules is not limited to those that respond to particular Congressional mandates, such as the ones in the 1992 Act. In addition, Congressional mandates do not become inapplicable after the passage of time. We also note that we made changes to our disclosure rules after passage of the 1992 Act. In 1993 we proposed individual senior officer compensation disclosures to satisfy the objectives of section 514 of the 1992 Act. The 1993 proposed rule was intended to benefit System stockholders by providing them with senior officer compensation information comparable to that available to stockholders of other financial institutions. However, based on System objections to the 1993 proposal, we limited individual compensation disclosure to CEOs, while providing individual senior officer compensation disclosure on shareholder request.

Forty-six commenters specifically opposed disclosure of senior officer compensation in the annual report instead of in the AMIS, while nine commenters supported this change in disclosure locations. A few commenters stated that the AMIS provides controlled disclosure to stockholders as opposed to the annual report which is used as marketing or promotional material. The FCC stated that disclosing compensation in the annual report does not improve the quality of the disclosure and that the purported benefit of consistency between the Farm Credit banks, which report such information in their annual reports, and the associations ignores the critical distinctions in the composition of the banks' and associations' respective stockholder groups. They also remarked that the commercial banks do not provide the information in their annual reports but in proxy statements filed with the SEC.

In conformance with withdrawing the proposed disclosure of individual senior officer compensation, we do not final some of the proposed changes at § 620.5(i)(2) regarding the location of senior officer compensation disclosure. Specifically, we retain the existing provision allowing associations the

option of reporting senior officer compensation in the AMIS instead of the annual report. We are, however, clarifying that the AMIS must be available for public inspection at the reporting association's offices. The AMIS is required to be available for public inspection under our existing rule at § 620.2(a) and to avoid confusion of AMIS availability, we require that associations state in the annual report that the AMIS is available for public inspection.

A number of commenters stated that the current regulation already provides for disclosure of individual compensation information to stockholders upon request, and that it is not burdensome for stockholders to make such requests. In conformance with withdrawing the proposed disclosure of individual senior officer compensation, we do not final some of the proposed changes at § 620.5(i)(2)(iii). Specifically, we keep the existing provision requiring disclosure of individual senior officer compensation to requesting shareholders. We are, however, removing the $50,000 threshold for making these disclosures. One commenter had recommended we raise the reporting threshold for disclosure of any individual senior officer's compensation upon request by a stockholder to $60,000 from $50,000 to keep pace with current market wages. We are not raising or keeping the threshold. Although the public disclosure requirement for individual senior officer compensation is limited to CEOs in the final rule, we continue to believe that it is important for stockholders of reporting institutions to have access to individual compensation information of their senior officers without restriction. Therefore, the required disclosure statement in the annual report or the AMIS (if the association chooses) is modified to require institutions to disclose to requesting stockholders the compensation information for any individual senior officer and any other officer included in the aggregate. We take this opportunity to emphasize that institutions may not question the reason for a request of individual senior officer compensation, nor record the request in the shareholder's files. Institutions must promptly provide the information to their shareholders without any contingencies or undue delay.

(ii) Senior Officer Perquisites

Ten System commenters opposed lowering the reporting level for perquisites from $25,000 to $5,000. One commenter stated that the disclosure for perquisites was inconsistent with Sarbanes-Oxley and requirements for other corporate lending institutions. A second commenter stated that the disclosure of perquisites should be included in the aggregate for all senior officers. As stated in the proposed rule, perquisites by their nature are nominal privileges and benefits. As such, we believe the $5,000 disclosure level for the reportable loan transaction threshold at § 620.5(j) is a reasonable level. Due to our withdrawing the reporting of individualized senior officer compensation, the reporting of perquisites continues to be reported in the aggregate and listed separately from salary, bonus and other compensation. We also note that reporting senior officer perquisites is consistent with SEC reporting requirements.

E. Audit and Compensation Committees

1. Audit Committee

a. Bank and Association Audit Committees [§ 620.30]

We received 150 comment letters on this provision. Several commenters supported audit committees for banks and associations, but expressed objections to certain aspects of our rule. One commenter remarked that higher auditing standards are needed within the System to avoid accounting problems experienced by other GSEs.

i. Chairmanship

We received 140 comment letters opposing the requirement that a director with financial expertise serve as the audit committee's chair. These commenters stated that the board or the audit committee should be free to designate its own chair, with one commenter explaining that a board might logically name the director with the most financial expertise as chair but should have the flexibility to do so. Another explained that they like to rotate their committee chairs and our rule restricts their ability to do so. Another commenter stated that putting an outside director in the chairmanship position lessens the director's independent perspective. One commenter stated that the authority for the committee to hire experts negated the need for the director with expertise to chair the committee. Many commenters said it was unreasonable to equate financial expertise with the ability to serve as an effective chair, particularly if the financial expert is new to the institution. Still others explained that leadership skills, past experience, knowledge of institution operations and lending activities, and history of service on the board may be more useful qualities for an audit committee chair than placing a new director with financial expertise in this position. These commenters further stated that removing a financial expert from the chairmanship would not limit his or her involvement in the committee's activities or restrict his or her ability to present contrary views. Other commenters suggested that we require a financial expert serve on the audit committee, without requiring him or her to be the chair. A few commenters remarked that there was no need for a financial expert as all committee members were being required to have some level of financial knowledge.

We agree that chairing the audit committee may require other skills or experience beyond financial expertise. We are therefore amending the rule to only require that any director identified as a financial expert, as defined in the rule, serve on the audit committee. This director does not have to chair the committee, but should not be automatically excluded from doing so. We believe this change to the rule addresses all the comments without compromising a financial expert's role on the committee. We further require any financial expert adviser, retained by smaller associations under § 611.210(a)(2), serve as adviser to the institution's audit committee. We believe it is important for a board's financial expert, whether drawn from a director or contracted adviser, be available to the institution's audit committee. The final rule does not require outside director participation on the audit committee. Elsewhere in the rule, we removed the requirement that an outside director be a financial expert. Continuing to require an outside director to serve on the audit committee, combined with the requirement that committee members have a level of financial knowledge, would, in effect, still require institutions to appoint a financial expert as an outside director.

ii. Association Exemption

Twelve commenters objected to requiring audit committees for associations, stating that we are interfering with the authority of the board of directors to establish board committees and determine committee composition and structure. One commented that associations should have the ultimate discretion to determine what committees they have and how they are staffed. Another commenter requested a small institution exemption from the audit committee requirement of $500 million on the basis that other regulators have similar

exemptions and the requirement is unduly burdensome for small associations.

We are not providing an exemption for small institutions. As explained in the proposed rule, requiring the establishment of audit committees and identifying basic composition is necessary to the safe and sound operations of System institutions. The increasing size, complexity, and sophistication of today's financial markets and the pivotal role the board of directors and its audit committee has in ensuring accurate oversight and reporting to stockholders, investors, and the public make certain basic operating practices essential.

Two commenters stated that the full board should be able to function as the audit committee. One commenter stated that each stockholder-elected director must fulfill his fiduciary responsibility with regard to auditing issues and objected to a ''separation of duties'' whereby only a few directors serve on an audit committee that would operate autonomously. Our rule establishes a minimum size, not a maximum, making it possible for an entire board to serve as the audit committee. We caution the institutions considering this approach that larger committee membership may reduce the efficiency and effectiveness of the committee. The committee, all of whose members should have some level of financial knowledge, is responsible for overseeing the financial statements of the institution, among other duties. These specific, and potentially complex, duties may require smaller group discussions than what may be achieved with an entire board. The audit committee does not function independently of the board, but functions under a board charter and reports to the board on a regular basis.

iii. Knowledge, Duties, and Resources

Fourteen commenters opposed requiring all audit committee members to be knowledgeable in financial matters. Some commenters instead asked that most committee members have this knowledge, suggesting it might be difficult to find qualified board members to adequately staff the audit committee. One commenter cited the OCC, explaining that they do not require commercial banks to have directors with financial expertise unless the bank has $3 billion or more in assets. To perform its duties, audit committee members must be knowledgeable in at least one of the areas cited in the rule. We agree that some institution directors, upon election or appointment to the board, might not have sufficient financial knowledge to serve on an audit committee. This is one of the reasons we are requiring institutions to establish a director training policy. Institution directors lacking sufficient financial experience should receive training so they might serve on the audit committee.

Two commenters disagreed with requiring a supermajority vote of the board of directors to deny an audit committee's request for resources. The commenters said that the board should decide what level of approval was needed for this purpose. While we believe that the board should have a check on audit committee spending, we believe the committee should have sufficient autonomy to carry out its duties. A supermajority vote by the board prevents abuse but ensures the committee's access to needed resources.

Other commenters asked that we change the duties of the committee from having oversight over the preparation of financial reports to one of a review function. We disagree; part of the board's oversight and fiduciary duty is to assure stockholders that financial reports are subject to review by the board or its committee, independent of management. This function is delegated to, and conducted by, the audit committee, which has a special set of skills for dealing with financial audits. A simple review would not discharge all of the board's responsibility regarding financial reporting to stockholders, investors, and the public in general. Therefore, we make no change in the final rule dealing with the required statement by the audit committee that financial statements were prepared under its oversight.

As a technical change, we are reorganizing into paragraphs the provisions regarding audit committee oversight of the external auditor.

b. System Audit Committee [§ 630.6]

We received three comment letters on our provision dealing with the System Audit Committee (SAC). Generally, the commenters discussed the structural and operational changes to the existing SAC that the proposed rule would have required. One commenter remarked that Funding Corporation board members are financially literate but there is no assurance that the board will have a financial expert as defined by the SEC. Another commented that requiring audit committees to be comprised of members from a board of directors may work for individual System institutions, but not for the SAC. The SAC requires broader representation and greater financial experience due to the unique role it plays in representing the interests of all System institutions and in organizing financial statements on behalf of the entire System. We agree that an audit committee at the System-wide level need not be composed solely of Funding Corporation board members. Therefore, we are not adopting the proposed requirement that the SAC be comprised entirely of members of the Funding Corporation's board. However, a System-wide audit committee should include representation from the System and we are modifying the membership requirements for the SAC to require at least one-third of the SAC members be from the System. When calculating the number of required System representatives, fractions of 0.5 or more should be rounded up to the nearest whole number. For example, one-third of a five-member committee equals 1.66 members, so there would have to be two System representatives on a five-member SAC.

We also remove the requirement that a Funding Corporation outside director serve on the SAC. However, the SAC must have at least one financial expert. Unlike bank and association audit committees, the expert must chair the SAC. Because the SAC membership is not restricted to the Funding Corporation board of directors, the same recruitment issues leading to our changing this aspect of the rule for banks and associations do not arise. We believe that since the SAC assists in setting the reporting and disclosure standards for the entire System, it should have broader representation from System institutions and deeper and broader financial knowledge and experience than other System institution audit committees. We also retain the definition of financial expertise used in the proposed rule. This definition is less restrictive than that used by the SEC as it allows for experience in either internal controls or in preparing and auditing financial statements, but not both. Given this less restrictive definition and the significant responsibilities of the SAC, we believe the requirement that the financial expert chair the SAC is both prudent and appropriate.

As a technical change, we are reorganizing into paragraphs the provisions regarding audit committee oversight of the external auditor. We also make minor technical and grammatical changes because of changes made to the SAC composition.

2. Compensation Committee [§§ 620.31 and 630.6]

We received 125 System comment letters on the requirement for compensation committees. Of these, 11 commenters supported the provision; 43

commenters expressed opposition to a regulatory requirement for a compensation committee; and the rest of the commenters suggested revisions to the rule without expressly agreeing or disagreeing with it. Commenters opposed to this requirement stated that each institution should have the discretion to determine what board committees are necessary. Some stated that their institution already provides adequate oversight to compensation packages. Some expressed the view that the entire board is responsible for compensation and should not be forced to delegate that duty. Other commenters stated that the best practice is to have compensation committees responsible for communicating policies and strategies, not making decisions. We are not changing the requirement that all institutions have compensation committees. While we agree that System institutions should have broad discretion to manage their internal affairs; we also believe that System institutions need to comply with certain standards facilitating safety and soundness and promoting the cooperative principles of user control and accountability.

One hundred and one commenters requested we not require compensation committees to set or approve senior officer compensation. They stated that the CEO is responsible for setting the compensation of senior officers and the committee's approval would undermine the CEO's authority. The commenters also stated that such a requirement would compromise the ability of the board to hold the CEO accountable for hiring and promoting officers. These commenters stated that such a requirement could result in the committee members evaluating the performance of senior officers, instead of the CEO. One commenter stated that individual pay packages for senior managers should remain the prerogative of the CEO. Another commented that although compensation committee salary reviews may be a best practice, we have gone farther by requiring the committee to approve compensation paid. The commenter stated that the committee should determine their own level of involvement in monitoring the activities of the CEO. Yet another commenter stated that the provision weakens governance by blurring the line between the board and CEO in compensation matters. Five commenters requested the committee's authority be limited to reviews and recommendations, with approval authority reserved for the full board. The commenters remarked that this change should provide sufficient oversight of the CEO in his administration of the institution's compensation program.

We are persuaded by the commenters that control over individual senior officer compensation is better handled by the CEO. However, we continue to believe the compensation committee must take an active role in monitoring compensation. Therefore, we are modifying our rule to require the compensation committee approve the overall compensation program for senior officers. We believe this modification strengthens governance and provides a clear distinction between boards and CEOs in compensation matters. We believe the rule provides institution boards with sufficient flexibility to delegate or apportion many of these compensation matters in ways that they deem most appropriate.

A few commenters asked for a small institution exemption, noting that small institutions with few employees should not be required to have a compensation committee. We disagree and are not providing a small institution exemption. We continue to believe that a well-defined compensation program, administered by a qualified, objective board committee will ensure that institutions have the needed structure for this important function, regardless of their size.

Three commenters stated that they already had committees performing these functions but with different committee names, such as the executive committee or human resource committee. These commenters requested that the final rule allow deviations from the proposed committee name. We are not changing the rule because the rule does not require the committee be named a ''compensation committee.'' A board committee performing the duties of the compensation committee, with a charter that satisfies committee requirements may fill the role of a compensation committee, even though it has a different name.

VI. Miscellaneous

1. Bank Director Compensation [§ 611.400]

We asked for comments on whether we should change our existing regulation allowing a waiver of the statutory limit on Farm Credit bank director compensation. We did not propose changes to our existing rule, but asked whether we should retain, reduce, increase, or remove the current regulatory 30-percent waiver amount and at what level we should remove the authority of Farm Credit banks to exercise the waiver without prior submission to FCA. We also sought comment on what constitutes an appropriate exceptional circumstance.

We received nine System letters and one letter under our regulatory burden initiative on this issue. All commenters supported an increase in the compensation cap because of increased governance responsibilities, the changing legal climate, heightened standards of accountability, and recruitment difficulties. None offered suggestions on the appropriate amount or exceptional circumstances needed to trigger the waiver amount. The FCA Board reviewed the comments submitted and on December 15, 2005 issued Bookletter 051 to increase the maximum bank director compensation to $45,740.

2. Implementation Date

We proposed a 1-year delay in the implementation date of the rule in two areas: A director who has financial expertise and a second outside director. Two commenters urged us to consider extending implementation beyond 1 year. However, many commenters noted that their respective institutions were already in compliance with many of the provisions of the rule. We are not extending the 1-year implementation date but are changing the areas where it applies. We delay for 1 year the board composition requirements on financial experts (§ 611.210(a)(2)) and additional outside directors (§ 611.220(a)(2)(i) and (ii)). We also delay for 1 year the nominating committee requirement (§§ 611.325 and 620.21(d)(2)) for Farm Credit banks only. All other provisions require compliance by the effective date of this rule.

3. Other Comments Received

We received two comments that fall outside the scope of this rule. One commenter requested we revisit the intent and effective result of our cumulative voting regulations. The commenter stated that as institutions grow in size the effect of cumulative voting may produce the opposite of its intended purpose and larger associations effectively control the outcome of bank elections under this process. The second commenter requested we modernize our regulatory framework and the Act because it is necessary for the System to be able to meet the changing capital needs of rural America. We will consider these comments in our regulatory burden initiative.

VII. Regulatory Flexibility Act

Pursuant to section 605(b) of the Regulatory Flexibility Act (5 U.S.C. 601 *et seq.*), FCA hereby certifies that the final rule will not have a significant economic impact on a substantial number of small entities. Each of the banks in the Farm Credit System, considered together with its affiliated associations, has assets and annual income in excess of the amounts that would qualify them as small entities. Therefore, Farm Credit System institutions are not ''small entities'' as defined in the Regulatory Flexibility Act.

List of Subjects

12 CFR Part 611

Agriculture, Banks, banking, Rural areas.

12 CFR Part 612

Agriculture, Banks, banking, Conflicts of interest, Crime, Investigations, Rural areas.

12 CFR Part 614

Agriculture, Banks, banking, Foreign trade, Reporting and recordkeeping requirements, Rural areas.

12 CFR Part 615

Accounting, Agriculture, Banks, banking, Government securities, Investments, Rural areas.

12 CFR Part 618

Agriculture, Archives and records, Banks, banking, Insurance, Reporting and recordkeeping requirements, Rural areas, Technical assistance.

12 CFR Part 619

Agriculture, Banks, banking, Rural areas.

12 CFR Part 620

Accounting, Agriculture, Banks, banking, Reporting and recordkeeping requirements, Rural areas.

12 CFR Part 630

Accounting, Agriculture, Banks, banking, Organization and functions (Government agencies), Reporting and recordkeeping requirements, Rural areas.

■ For the reasons stated in the preamble, parts 611, 612, 614, 615, 618, 619, 620, and 630 of chapter VI, title 12 of the Code of Federal Regulations are amended as follows:

PART 611—ORGANIZATION

■ 1. The authority citation for part 611 is revised to read as follows:

Authority: Secs. 1.3, 1.4, 1.13, 2.0, 2.1, 2.10, 2.11, 3.0, 3.2, 3.21, 4.12, 4.15, 4.20, 4.21, 5.9, 5.10, 5.17, 6.9, 6.26, 7.0–7.13, 8.5(e) of the Farm Credit Act (12 U.S.C. 2011, 2013, 2021, 2071, 2072, 2091, 2092, 2121, 2123, 2142, 2183, 2203, 2208, 2209, 2243, 2244, 2252, 2278a–9, 2278b–6, 2279a–2279f–1, 2279aa–5(e)); secs. 411 and 412 of Pub. L. 100–233, 101 Stat. 1568, 1638; secs. 409 and 414 of Pub. L. 100–399, 102 Stat. 989, 1003, and 1004.

■ 2. Add a new subpart B, consisting of §§ 611.210 and 611.220 to read as follows:

Subpart B—Bank and Association Board of Directors

Sec.
611.210 Director qualifications and training.
611.220 Outside directors.

Subpart B—Bank and Association Board of Directors

§ 611.210 Director qualifications and training.

(a) *Qualifications.* (1) Each bank and association board of directors must establish and maintain a policy identifying desirable director qualifications. The policy must explain the type and level of knowledge and experience desired for board members, explaining how the desired qualifications were identified. The policy must be periodically updated and provided to the institution's nominating committee.

(2) Each Farm Credit institution board must have a director who is a financial expert. Boards of directors for associations with $500 million or less in total assets as of January 1 of each year may satisfy this requirement by retaining an advisor who is a financial expert. The financial advisor must report to the board of directors and be free of any affiliation with the external auditor or institution management. A financial expert is one recognized as having education or experience in: Accounting, internal accounting controls, or preparing or reviewing financial statements for financial institutions or large corporations consistent with the breadth and complexity of accounting and financial reporting issues that can reasonably be expected to be raised by the institution's financial statements.

(b) *Training.* Each bank and association board of directors must establish and maintain a policy for director training that includes appropriate implementing procedures. The policy must identify training areas supporting desired director qualifications. Each Farm Credit bank and association must require newly elected or appointed directors to complete director orientation training within 1 year of assuming their position and require incumbent directors to attend training periodically to advance their skills.

§ 611.220 Outside directors.

(a) *Eligibility, number and term.* (1) *Eligibility.* No candidate for an outside director position may be a director, officer, employee, agent, or stockholder of an institution in the Farm Credit System. Farm Credit banks and associations must make a reasonable effort to select outside directors possessing some or all of the desired director qualifications identified pursuant to § 611.210(a) of this part.

(2) *Number.* Stockholder-elected directors must constitute at least 60 percent of the members of each institution's board.

(i) Each Farm Credit bank must have at least two outside directors.

(ii) Associations with total assets exceeding $500 million as of January 1 of each year must have no fewer than two outside directors on the board. However, this requirement does not apply if it causes the percent of stockholder-elected directors to be less than 75 percent of the board.

(iii) Associations with $500 million or less in total assets as of January 1 of each year must have at least one outside director.

(3) *Terms of office.* Banks and associations may not establish a different term of office for outside directors than that established for stockholder-elected directors.

(b) *Removal.* Each institution must establish and maintain procedures for removal of outside directors. When the removal of an outside director is sought before the expiration of the outside director's term, the reason for removal must be documented. An institution's director removal procedures must allow for removal of an outside director by a majority vote of all voting stockholders voting, in person or by proxy, or by a two-thirds majority vote of the full board of directors. The outside director subject to the removal action is prohibited from voting in his or her own removal action.

Subpart C—Election of Directors and Other Voting Procedures

■ 3. Amend § 611.320 by revising paragraphs (b) and (e) to read as follows:

§ 611.320 Impartiality in the election of directors.

* * * * *

(b) No employee or agent of a Farm Credit institution shall take any part, directly or indirectly, in the nomination

or election of members to the board of directors of a Farm Credit institution, or make any statement, either orally or in writing, which may be construed as intended to influence any vote in such nominations, or elections. This paragraph shall not prohibit employees or agents from providing biographical and other similar information or engaging in other activities pursuant to policies and procedures for nominations and elections. This paragraph does not affect the right of an employee or agent to nominate or vote for stockholder-elected directors of an institution in which the employee or agent is a voting member.

* * * * *

(e) No Farm Credit institution may in any way distribute or mail, whether at the expense of the institution or another, any campaign materials for director candidates. Institutions may request biographical information, as well as the disclosure information required under § 620.21(d), from all declared candidates who certify that they are eligible, restate such information in a standard format, and distribute or mail it with ballots or proxy ballots.

■ 4. Add a new § 611.325 to read as follows:

§ 611.325 Bank and association nominating committees.

Nominating committees must conduct themselves in the impartial manner prescribed by the policies and procedures adopted by their institution under § 611.320.

(a) *Composition*. The voting stockholders of each bank and association must elect a nominating committee of no fewer than three members. No individual may serve on a nominating committee who, at the time of selection to or during service on a nominating committee, is an employee, director, or agent of that bank or association. A nominating committee member may not be a candidate for election to the board in the same election for which the committee is identifying nominees.

(b) *Responsibilities*. It is the responsibility of each nominating committee to identify, evaluate, and nominate candidates for stockholder election to a bank or association board of directors.

(1) Each nominating committee must nominate individuals whom the committee determines meet the eligibility requirements to run for director positions. The committee must endeavor to assure representation from all areas of the institution's territory and as nearly as possible all types of agriculture practiced within the territory.

(2) The nominating committee must evaluate the qualifications of the director candidates. The evaluation process must consider whether there are any known obstacles preventing a candidate from performing the duties of the position.

(3) Each committee must nominate at least two candidates for each director position being voted on by stockholders. If two nominees cannot be identified, the nominating committee must provide written explanation to the existing board of the efforts to locate candidates or the reasons for disqualifying any other candidate that resulted in fewer than two nominees.

(c) *Resources*. Each bank and association must provide its nominating committee reasonable access to administrative resources in order for the committee to perform its duties. Banks and associations must, at a minimum, provide their nominating committees with a current list of stockholders, the most recent bylaws, the current director qualifications policy, and a copy of the policies and procedures that the bank or the association has adopted pursuant to § 611.320(a) assuring impartial elections. On the request of the nominating committee, the institution must also provide a summary of the current board self-evaluation. The bank or association may require a pledge of confidentiality by committee members prior to releasing evaluation documents.

Subpart F—Bank Mergers, Consolidations and Charter Amendments

§ 611.1030 [Removed and reserved]

■ 5. Remove and reserve § 611.1030.

Subpart P—Termination of System Institution Status

■ 6. Amend § 611.1223 by revising paragraph (d)(9) to read as follows:

§ 611.1223 Information statement—contents.

* * * * *

(d) * * *

(9) *Employment, retirement, and severance agreements*. Describe any employment agreement or arrangement between the successor institution and any of your senior officers or directors. Describe any severance and retirement plans that cover your employees or directors and state the costs you expect to incur under the plans in connection with the termination.

* * * * *

PART 612—STANDARDS OF CONDUCT AND REFERRAL OF KNOWN OR SUSPECTED CRIMINAL VIOLATIONS

■ 7. The authority citation for part 612 continues to read as follows:

Authority: Secs. 5.9, 5.17, 5.19 of the Farm Credit Act (12 U.S.C. 2243, 2252, 2254).

Subpart A—Standards of Conduct

■ 8. Amend § 612.2130 as follows:

■ a. Add the word ''currently'' after the word ''who'' each time it appears in paragraph (a);

■ b. Remove paragraph (d);

■ c. Redesignate existing paragraphs (e) through (u) as paragraphs (d) through (t), consecutively; and

■ d. Revise newly redesignated paragraph (e) to read as follows:

§ 612.2130 Definitions.

* * * * *

(e) *Entity* means a corporation, company, association, firm, joint venture, partnership (general or limited), society, joint stock company, trust (business or otherwise), fund, or other organization or institution.

* * * * *

■ 9. Amend § 612.2150 by revising paragraph (d) to read as follows:

§ 612.2150 Employees—prohibited conduct.

* * * * *

(d) Serve as an officer or director of an entity other than a System institution that transacts business with a System institution in the district or of any commercial bank, savings and loan, or other non-System financial institution, except employee credit unions. For the purposes of this paragraph, ''transacts business'' does not include loans by a System institution to a family-owned entity, service on the board of directors of the Federal Agricultural Mortgage Corporation, or transactions with nonprofit entities or entities in which the System institution has an ownership interest. With the prior approval of the board of the employing institution, an employee of a Farm Credit Bank or association may serve as a director of a cooperative that borrows from a bank for cooperatives. Prior to approving an employee request, the board shall determine whether the employee's proposed service as a director is likely to cause the employee to violate any regulations in this part or the institution's policies, e.g., the requirements relating to devotion of time to official duties.

* * * * *

■ 10. Amend § 612.2155 by revising paragraph (a) introductory text to read as follows:

§ 612.2155 Employee reporting.

(a) Annually, as of the institution's fiscal yearend, and at such other times as may be required to comply with paragraph (c) of this section, each senior officer must file a written and signed statement with the Standards of Conduct Official that fully discloses:

* * * * *

PART 614—LOAN POLICIES AND OPERATIONS

■ 11. The authority citation for part 614 continues to read as follows:

Authority: 42 U.S.C. 4012a, 4104a, 4104b, 4106, and 4128; Secs. 1.3, 1.5, 1.6, 1.7, 1.9, 1.10, 1.11, 2.0, 2.2, 2.3, 2.4, 2.10, 2.12, 2.13, 2.15, 3.0, 3.1, 3.3, 3.7, 3.8, 3.10, 3.20, 3.28, 4.12, 4.12A, 4.13B, 4.14, 4.14A, 4.14C, 4.14D, 4.14E, 4.18, 4.18A, 4.19, 4.25, 4.26, 4.27, 4.28, 4.36, 4.37, 5.9, 5.10, 5.17, 7.0, 7.2, 7.6, 7.8, 7.12, 7.13, 8.0, 8.5 of the Farm Credit Act (12 U.S.C. 2011, 2013, 2014, 2015, 2017, 2018, 2019, 2071, 2073, 2074, 2075, 2091, 2093, 2094, 2097, 2121, 2122, 2124, 2128, 2129, 2131, 2141, 2149, 2183, 2184, 2201, 2202, 2202a, 2202c, 2202d, 2202e, 2206, 2206a, 2207, 2211, 2212, 2213, 2214, 2219a, 2219b, 2243, 2244, 2252, 2279a, 2279a–2, 2279b, 2279c–1, 2279f, 2279f–1, 2279aa, 2279aa–5); sec. 413 of Pub. L. 100–233, 101 Stat. 1568, 1639.

Subpart N—Loan Servicing Requirements; State Agricultural Loan Mediation Programs; Right of First Refusal

§ 614.4511 [Removed and reserved]

■ 12. Remove and reserve § 614.4511.

PART 615—FUNDING AND FISCAL AFFAIRS, LOAN POLICIES AND OPERATIONS, AND FUNDING OPERATIONS

■ 13. The authority citation for part 615 continues to read as follows:

Authority: Secs. 1.5, 1.7, 1.10, 1.11, 1.12, 2.2, 2.3, 2.4, 2.5, 2.12, 3.1, 3.7, 3.11, 3.25, 4.3, 4.3A, 4.9, 4.14B, 4.25, 5.9, 5.17, 6.20, 6.26, 8.0, 8.3, 8.4, 8.6, 8.7, 8.8, 8.10, 8.12 of the Farm Credit Act (12 U.S.C. 2013, 2015, 2018, 2019, 2020, 2073, 2074, 2075, 2076, 2093, 2122, 2128, 2132, 2146, 2154, 2154a, 2160, 2202b, 2211, 2243, 2252, 2278b, 2278b–6, 2279aa, 2279aa–3, 2279aa–4, 2279aa–6, 2279aa–7, 2279aa–8, 2279aa–10, 2279aa–12); sec. 301(a) of Pub. L. 100–233, 101 Stat. 1568, 1608.

Subpart H—Capital Adequacy

■ 14. Amend § 615.5200 by revising paragraph (b)(1) to read as follows:

§ 615.5200 Capital planning.

* * * * *

(b) * * *

(1) Capability of management and the board of directors;

* * * * *

Subpart I—Issuance of Equities

■ 15. Amend § 615.5230 by revising paragraphs (a)(1) introductory text, (a)(2) introductory text, (a)(3) introductory text, and (b)(5) to read as follows:

§ 615.5230 Implementation of cooperative principles.

(a) * * *

(1) Each voting shareholder of an association or bank for cooperatives must:

* * * * *

(2) Each voting shareholder of a Farm Credit Bank must:

* * * * *

(3) The regional election of stockholder-elected directors is permitted under the following conditions:

* * * * *

(b) * * *

(5) Each bank must endeavor to assure that there is a choice of at least two nominees for each elective office to be filled and that the board represents as nearly as possible all types of agriculture in the district. If fewer than two nominees for each position are named, the efforts to locate two willing nominees must be documented in the records of the bank and provided as part of the Annual Meeting Information Statement of part 620, subpart E of this chapter. The bank must also maintain a list of the type or types of agriculture engaged in by each director on its board.

PART 618—GENERAL PROVISIONS

■ 16. The authority citation for part 618 continues to read as follows:

Authority: Secs. 1.5, 1.11, 1.12, 2.2, 2.4, 2.5, 2.12, 3.1, 3.7, 4.12, 4.13A, 4.25, 4.29, 5.9, 5.10, 5.17 of the Farm Credit Act (12 U.S.C. 2013, 2019, 2020, 2073, 2075, 2076, 2093, 2122, 2128, 2183, 2200, 2211, 2218, 2243, 2244, 2252).

Subpart G—Releasing Information

■ 17. Amend § 618.8310 by revising paragraph (b) to read as follows:

§ 618.8310 Lists of borrowers and stockholders.

* * * * *

(b)(1) Within 7 days after receipt of a written request by a stockholder, each Farm Credit bank or association must provide a current list of its stockholders' names, addresses, and classes of stock held to such requesting stockholder. As a condition to providing the list, the bank or association may only require that the stockholder agree and certify in writing that the stockholder will:

(i) Utilize the list exclusively for communicating with stockholders for permissible purposes; and

(ii) Not make the list available to any person, other than the stockholder's attorney or accountant, without first obtaining the written consent of the institution.

(2) As an alternative to receiving a list of stockholders, a stockholder may request the institution mail or otherwise furnish to each stockholder a communication for a permissible purpose on behalf of the requesting stockholder. This alternative may be used at the discretion of the requesting stockholder, provided that the requester agrees to defray the reasonable costs of the communication. In the event the requester decides to exercise this option, the institution must provide the requester with a written estimate of the costs of handling and mailing the communication as soon as practicable after receipt of the stockholder's request to furnish a communication. However, a stockholder may not exercise this option when requesting the list to distribute campaign material for election to the institution board or board committees. Farm Credit banks and associations are prohibited from distributing or mailing campaign material under § 611.320(e) of this chapter.

(3) For purposes of paragraph (b) of this section ''permissible purpose'' is defined to mean matters relating to the business operations of the institutions. This includes matters relating to the effectiveness of management, the use of institution assets, the distribution by stockholder candidates of campaign material for election to the institution board or board committees, and the performance of directors and officers. This does not include communications involving commercial, social, political, or charitable causes, communications relating to the enforcement of a personal claim or the redress of a personal grievance, or proposals advocating that the bank or association violate any Federal, State, or local law or regulation.

Subpart J—Internal Controls

■ 18. Amend § 618.8430 by revising the introductory text and adding a new paragraph (d) to read as follows:

§ 618.8430 Internal controls.

Each Farm Credit institution's board of directors must adopt an internal control policy, providing adequate direction to the institution in

establishing effective control over, and accountability for, operations, programs, and resources. The policy must include, at a minimum, the following:

* * * * *

(d) The role of the audit committee in providing oversight and review of the institution's internal controls.

■ 19. Amend § 618.8440 by revising paragraphs (b) introductory text and (b)(2) to read as follows:

§ 618.8440 Planning.

* * * * *

(b) The plan must include, at a minimum, the following:

(1) * * *

(2) An annual review of the internal and external factors likely to affect the institution during the planning period. The review must include:

(i) An assessment of management capabilities,

(ii) An assessment of the needs of the board, based on the annual self-evaluation of the board's performance, and

(iii) Strategies for correcting identified weaknesses.

* * * * *

PART 619—DEFINITIONS

■ 20. The authority citation for part 619 is revised to read as follows:

Authority: Secs. 1.4, 1.7, 2.1, 2.4, 2.11, 3.2, 3.21, 4.9, 5.9, 5.12, 5.17, 5.18, 6.22, 7.0, 7.1, 7.6, 7.7, 7.8, 7.12 of the Farm Credit Act (12 U.S.C. 2011, 2015, 2072, 2075, 2092, 2123, 2142, 2160, 2243, 2244, 2252, 2253, 2278b–2, 2279a, 2279a–1, 2279b, 2279b–1, 2279b–2, 2279f).

■ 21. Amend part 619 by adding new § 619.9235 to read as follows:

§ 619.9235 Outside director.

A member of a board of directors selected or appointed by the board, who is not a director, officer, employee, agent, or stockholder of any Farm Credit System institution.

■ 21a. Amend part 619 by adding a new § 619.9310 to read as follows:

§ 619.9310 Senior officer.

The Chief Executive Officer, the Chief Operations Officer, the Chief Financial Officer, the Chief Credit Officer, and the General Counsel, or persons in similar positions; and any other person responsible for a major policy-making function.

PART 620—DISCLOSURE TO SHAREHOLDERS

■ 22. The authority citation for part 620 continues to read as follows:

Authority: Secs. 5.17, 5.19, 8.11 of the Farm Credit Act (12 U.S.C. 2252, 2254, 2279aa–11) sec. 424 of Pub. L. 100–233, 101 Stat. 1568, 1656.

Subpart A—General

■ 23. Amend § 620.1 as follows:

■ a. Remove paragraph (p);

■ b. Redesignate existing paragraphs (q) through (s) as paragraphs (p) through (r), consecutively; and

■ c. Revise paragraph (a).

§ 620.1 Definitions.

* * * * *

(a) *Affiliated organization* means any organization, other than a Farm Credit organization, of which a director, senior officer or nominee for director of the reporting institution is a partner, director, officer, or majority shareholder.

* * * * *

Subpart B—Annual Report to Shareholders

■ 24. Amend § 620.5 as follows:

■ a. Revise paragraphs (h)(3), (i)(1), (i)(2) introductory text, (i)(2)(i), and (i)(2)(iii); and

■ b. Add new paragraph (m)(3).

§ 620.5 Contents of the annual report to shareholders.

* * * * *

(h) * * *

(3) For each director and senior officer, list any other business interest where the director or senior officer serves on the board of directors or as a senior officer. Name the position held and state the principal business in which the business is engaged.

* * * * *

(i) * * *

(1) *Director compensation.* Describe the arrangements under which directors of the institution are compensated for all services as a director (including total cash compensation and noncash compensation). Noncash compensation with an annual aggregate value of less than $5,000 does not have to be reported. State the total cash and reportable noncash compensation paid to all directors as a group during the last fiscal year. If applicable, describe any exceptional circumstances justifying the additional director compensation as authorized by § 611.400(c) of this chapter. For each director, state:

(i) The number of days served at board meetings;

(ii) The total number of days served in other official activities, including any board committee(s);

(iii) Any additional compensation paid for service on a board committee, naming the committee; and

(iv) The total cash and noncash compensation paid to each director during the last fiscal year. Reportable compensation includes cash and the value of noncash items provided by a third party to a director for services rendered by the director on behalf of the reporting Farm Credit institution. Noncash compensation with an annual aggregate value of less than $5,000 does not have to be reported.

(2) *Senior officer compensation.* Disclose the information on senior officer compensation and compensation plans as required by this paragraph. Farm Credit System associations may disclose the information required by this paragraph in the Annual Meeting Information Statement (AMIS) required under subpart E of this part. Associations exercising this option must include a reference in the annual report stating that the senior officer compensation information is included in the AMIS and that the AMIS is available for public inspection at the reporting association offices pursuant to § 620.2(a).

(i) The institution must disclose the total amount of compensation paid to senior officers in substantially the same manner as the tabular form specified in the following Summary Compensation Table (table):

SUMMARY COMPENSATION TABLE

Name of individual or number in group	Year	Annual Salary	Annual Bonus	Annual Deferred/ perquisite	Annual Other	Annual Total
(a)	(b)	(c)	(d)	(e)	(f)	(g)
CEO	20XX					
	20XX					

SUMMARY COMPENSATION TABLE—Continued

	Annual					
Name of individual or number in group	Year	Salary	Bonus	Deferred/ perquisite	Other	Total
(a)	(b)	(c)	(d)	(e)	(f)	(g)
	20XX					
Aggregate number of senior officers:						
(X)	20XX					
(X)	20XX					
(X)	20XX					

(A) For each of the last 3 completed fiscal years, report the total amount of compensation paid and the amount of each component of compensation paid to the institution's chief executive officer (CEO), naming the individual. If more than one person served in the capacity of CEO during any given fiscal year, individual compensation disclosures must be provided for each CEO.

(B) For each of the last 3 completed fiscal years, report the aggregate amount of compensation paid, and the components of compensation paid, to all senior officers as a group, stating the number of officers in the group without naming them. If applicable, include in the aggregate the amount of compensation paid to those officers who are not senior officers but whose total annual compensation is among the five highest amounts paid by the institution for the reporting period.

(C) Amounts shown as ''Salary'' (column (c)) and ''Bonus'' (column (d)) must reflect the dollar value of salary and bonus earned by the senior officer during the fiscal year. Amounts contributed during the fiscal year by the senior officer pursuant to a plan established under section 401(k) of the Internal Revenue Code, or similar plan, must be included in the salary column or bonus column, as appropriate. If the amount of salary or bonus earned during the fiscal year is not calculable by the time the report is prepared, the reporting institution must provide its best estimate of the compensation amount(s) and disclose that fact in a footnote to the table.

(D) Amounts shown as ''deferred/perquisites'' (column (e)) must reflect the dollar value of other annual compensation not properly categorized as salary or bonus, including but not limited to:

(*1*) Deferred compensation earned during the fiscal year, whether or not paid in cash; or

(*2*) Perquisites and other personal benefits, including the value of noncash items, unless the annual aggregate value of such perquisites is less than $5,000. Reportable perquisites include cash and the value of noncash items provided by a third party to a senior officer for services rendered by the officer on behalf of the reporting institution.

* * * * *

(iii) The annual report or AMIS must include a statement that disclosure of information on the total compensation paid during the last fiscal year to any senior officer or to any other officer included in the aggregate is available and will be disclosed to shareholders of the institution and shareholders of related associations (if applicable) upon request.

* * * * *

(m) * * *

(3) State that the financial statements were prepared under the oversight of the audit committee, identifying the members of the audit committee.

* * * * *

Subpart C—Quarterly Report

■ 25. Amend § 620.11 by adding a new paragraph (d)(5) and revising paragraphs (d) introductory text and (e) to read as follows:

§ 620.11 Content of quarterly report to shareholders.

* * * * *

(d) *Financial statements.* The following financial statements must be provided:

* * * * *

(5) State that the financial statements were prepared under the oversight of the audit committee.

(e) *Review by independent public accountant.* The interim financial information need not be audited or reviewed by an independent public accountant prior to filing. If, however, a review of the data is made in accordance with the established professional standards and procedures for such a review, the institution may state that the independent accountant has performed such a review under the supervision of the institution's audit committee. If such a statement is made, the report of the independent accountant on such review must accompany the interim financial information.

* * * * *

Subpart E—Annual Meeting Information Statement

■ 26. Revise the heading of subpart E to read as set forth above.

§ 620.20 [Removed and reserved]

■ 27. Remove and reserve § 620.20.

■ 28. Amend § 620.21 by revising the introductory paragraph, paragraphs (c)(2) and (d) to read as follows:

§ 620.21 Contents of the information statement and other information to be furnished in connection with the annual meeting or director elections.

Each bank and association of the Farm Credit System must prepare and provide an information statement (''statement'' or ''AMIS'') to its shareholders at least 10 days prior to any annual meeting or any director elections. The AMIS must reference the annual report required by subpart B of this part and such other material information as is necessary to make the required statement, in light of the circumstances under which it is made, not misleading. The AMIS must address the following items:

* * * * *

(c) * * *

(2) State the name of any incumbent director who attended fewer than 75 percent of the board meetings or any meetings of board committees on which he or she served during the last fiscal year.

* * * * *

(d) *Nominees.* (1) For each nominee, state the nominee's name, city and state of residence, business address if any, age, and business experience during the last 5 years, including each nominee's principal occupation and employment during the last 5 years. List all business interests on whose board of directors the nominee serves or is otherwise

employed in a position of authority, and state the principal business in which the business interest is engaged. Identify any family relationship of the nominee that would be reportable under part 612 of this chapter if elected to the institution's board.

(2) If fewer than two nominees for each position are named, describe the efforts of the nominating committee to locate two willing nominees.

(3) If association directors are nominated or elected by region, describe the regions and state the number of voting shareholders entitled to vote in each region.

(4) State whether nominations will be accepted from the floor. Associations must accept floor nominations. Any director nominee from the floor must be an eligible candidate for the director position for which the person has been nominated.

(i) For association directors not elected by region:

(A) If the annual meeting is to be held in more than one session and paper mail or electronic mail balloting will be conducted upon the conclusion of all sessions, state that nominations from the floor may be made at any session or, if the association's bylaws so provide, state that nominations from the floor shall be accepted only at the first session.

(B) If shareholders will not vote solely by paper mail or electronic mail ballot upon conclusion of all sessions, state that nominations from the floor may be made only at the first session.

(ii) For association directors elected by region:

(A) If more than one session of an annual meeting is held in a region, and if paper mail or electronic mail balloting will be conducted at the end of all sessions in a region, state that nominations from the floor may be made at any session in the region or, if the association's bylaws so provide, state that nominations from the floor shall be accepted only at the first session held in the region.

(B) If shareholders will not vote solely by paper mail or electronic mail ballot upon conclusion of all sessions in a region, state that nominations from the floor may be made only at the first session held in the region.

(5) For each nominee who is not an incumbent director, except a nominee from the floor, provide the information referred to in § 620.5(j) and (k) and paragraph (d)(1) of this section. If shareholders will vote by paper mail or electronic mail ballot upon conclusion of all sessions, each floor nominee must provide the information referred to in § 620.5(j) and (k) and paragraph (d)(1) of this section in paper or electronic form to the Farm Credit institution within the time period prescribed by the institution's bylaws. If the institution's bylaws do not prescribe a time period, state that each floor nominee must provide the disclosure to the institution within 5 business days of the nomination. The institution must ensure that the information is provided to the voting shareholders by delivering the ballots for the election of directors in the same format as the comparable information contained in the information statement. If shareholders will not vote by paper mail or electronic mail ballot upon conclusion of all sessions, each floor nominee must provide the information referred to in § 620.5(j) and (k) and paragraph (d)(1) of this section in paper or electronic form at the first session at which voting is held.

(6) Each bank and association must adopt policies and procedures that assure a disclosure statement is prepared by each director candidate. No person may be a nominee for director who does not make the disclosures required by this subpart. Candidate disclosure information must be distributed or mailed with ballots or proxy ballots to all shareholders eligible to vote in the election. Institutions may either restate such information in a standard format or provide complete copies of candidate disclosure information.

* * * * *

■ 29. Revise subpart F to read as follows:

Subpart F—Bank and Association Audit and Compensation Committees

Sec.
620.30 Audit committees.
620.31 Compensation committees.

Subpart F—Bank and Association Audit and Compensation Committees

§ 620.30 Audit committees.

Each Farm Credit bank and association must establish and maintain an audit committee. An audit committee is established by adopting a written charter describing the committee's composition, authorities, and responsibilities in accordance with this section. All audit committees must maintain records of meetings, including attendance, for at least 3 fiscal years.

(a) *Composition.* Each member of an audit committee must be a member of the Farm Credit institution's board of directors. An audit committee may not consist of less than three members and must include any director designated as a financial expert under § 611.210(a)(2) of this chapter. All audit committee members should be knowledgeable in at least one of the following: Public and corporate finance, financial reporting and disclosure, or accounting procedures.

(b) *Independence.* Every audit committee member must be free from any relationship that, in the opinion of the board, would interfere with the exercise of independent judgment as a committee member.

(c) *Resources.* Farm Credit institutions must permit their audit committees to contract for independent legal counsel and expert advisors. If an institution hires a financial expert advisor pursuant to § 611.210(a)(2), that advisor will also serve as an advisor to the audit committee. Each institution is responsible for providing monetary and nonmonetary resources to enable its audit committee to contract for external auditors, outside advisors, and ordinary administrative expenses. A two-thirds majority vote of the full board of directors is required to deny an audit committee's request for resources.

(d) *Duties.* Each audit committee must report only to the board of directors. In its capacity as a committee of the board, the audit committee is responsible for the following:

(1) *Financial reports.* Each audit committee must oversee management's preparation of the report to shareholders; review the impact of any significant accounting and auditing developments; review accounting policy changes relating to preparation of financial statements; and review annual and quarterly reports prior to release. After the audit committee reviews a financial policy, procedure, or report, it must record in its minutes its agreement or disagreement with the item(s) under review.

(2) *External auditors.* The external auditor must report directly to the audit committee. Each audit committee must:

(i) Determine the appointment, compensation, and retention of external auditors issuing audit reports of the institution; and

(ii) Review the external auditor's work.

(3) *Internal controls.* Each audit committee must oversee the institution's system of internal controls relating to preparation of financial reports, including controls relating to the institution's compliance with applicable laws and regulations. Any internal audit functions of the institution must also be subject to audit committee review and supervision.

§ 620.31 Compensation committees.

Each Farm Credit bank and association must establish and maintain a compensation committee by adopting a written charter describing the committee's composition, authorities, and responsibilities in accordance with this section. All compensation committees will be required to maintain records of meetings, including attendance, for at least 3 fiscal years.

(a) *Composition.* Each compensation committee must consist of at least three members. Each committee member must be a member of the institution's board of directors. Every member must be free from any relationship that, in the opinion of the board, would interfere with the exercise of independent judgment as a committee member.

(b) *Duties.* Each compensation committee must report only to the board of directors. In its capacity as a committee of the board, the compensation committee is responsible for reviewing the compensation policies and plans for senior officers and employees. Each compensation committee must approve the overall compensation program for senior officers.

(c) *Resources.* Each institution must provide monetary and nonmonetary resources to enable its compensation committee to function.

PART 630—DISCLOSURE TO INVESTORS IN SYSTEM-WIDE AND CONSOLIDATED BANK DEBT OBLIGATIONS OF THE FARM CREDIT SYSTEM

■ 30. The authority citation for part 630 continues to read as follows:

Authority: Secs. 5.17, 5.19 of the Farm Credit Act (12 U.S.C. 2252, 2254).

Subpart A—General

■ 31. Revise § 630.6 to read as follows:

§ 630.6 Funding Corporation committees.

(a) *System Audit Committee.* The Funding Corporation must establish and maintain a System Audit Committee (SAC) by adopting a written charter describing the committee's composition, authorities, and responsibilities in accordance with this section. The SAC must maintain records of meetings, including attendance, for at least 3 fiscal years.

(1) *Composition.* All SAC members should be knowledgeable in at least one of the following: Public and corporate finance, financial reporting and disclosure, or accounting procedures.

(i) At least one-third of the SAC members must be representatives from the Farm Credit System.

(ii) The SAC may not consist of less than three members and at least one member must be a financial expert. A financial expert is one who either has experience with internal controls and procedures for financial reporting or experience in preparing or auditing financial statements.

(iii) The chair of the SAC must be a financial expert.

(2) *Independence.* Every audit committee member must be free from any relationship that, in the opinion of the Funding Corporation board, would interfere with the exercise of independent judgment as a committee member.

(3) *Resources.* The Funding Corporation must permit the SAC to contract for independent legal counsel and expert advisors. The Funding Corporation is responsible for providing monetary and nonmonetary resources to enable the SAC to contract for external auditors, outside advisors, and ordinary administrative expenses. A two-thirds majority vote of the full Funding Corporation board of directors is required to deny any SAC request for resources.

(4) *Duties.* The SAC reports only to the Funding Corporation board of directors. In its capacity as a committee of the board, the SAC is responsible for the following:

(i) *Financial reports.* The SAC must oversee the Funding Corporation's preparation of the report to stockholders and investors; review the impact of any significant accounting and auditing developments; review accounting policy changes relating to preparation of the System-wide combined financial statements; and review annual and quarterly reports prior to release. After the SAC reviews a financial policy, procedure, or report, it must record in its minutes its agreement or disagreement with the item(s) under review.

(ii) *External auditors.* The external auditor must report directly to the SAC. The SAC must:

(A) Determine the appointment, compensation, and retention of external auditors issuing System-wide audit reports; and

(B) Review the external auditor's work.

(iii) *Internal controls.* The SAC must oversee the Funding Corporation's system of internal controls relating to preparation of financial reports, including controls relating to the Farm Credit System's compliance with applicable laws and regulations.

(b) *Compensation committee.* The Funding Corporation must establish and maintain a compensation committee by adopting a written charter describing the committee's composition, authorities, and responsibilities in accordance with this section. The compensation committee will be required to maintain records of meetings, including attendance, for at least 3 fiscal years.

(1) *Composition.* The committee must consist of at least three members. Each committee member must be a member of the Funding Corporation's board of directors. Every member must be free from any relationship that, in the opinion of the board, would interfere with the exercise of independent judgment as a committee member.

(2) *Duties.* The compensation committee must report only to the board of directors. In its capacity as a committee of the board, the compensation committee is responsible for reviewing the compensation policies and plans for senior officers and employees. The compensation committee must approve the overall compensation program for senior officers.

(3) *Resources.* The Funding Corporation must provide monetary and nonmonetary resources to enable its compensation committee to function.

Subpart B—Annual Report to Investors

■ 32. Amend § 630.20 by revising the introductory heading for paragraph (h), paragraphs (h)(2) and (l) introductory text to read as follows:

§ 630.20 Contents of the annual report to investors.

* * * * *

(h) *Directors and senior officers.*

* * * * *

(2) *Senior officers.* List the names of all senior officers employed by the disclosure entities, including position title and length of service at current position.

* * * * *

(l) *Financial statements.* Furnish System-wide combined financial statements and related footnotes prepared in accordance with GAAP, and accompanied by supplemental information prepared in accordance with the requirements of § 630.20(m). The System-wide combined financial statements must provide investors and potential investors in FCS debt obligations with the most meaningful presentation pertaining to the financial condition and results of operations of the Farm Credit System. The System-wide combined financial statement and accompanying supplemental information must be audited in accordance with generally accepted

auditing standards by a qualified public accountant (as defined in § 621.2(i) of this chapter) and indicate that the financial statements were prepared under the oversight of the System Audit Committee, identifying the members of the audit committee. The System-wide combined financial statements must include the following:

* * * * *

Subpart C—Quarterly Reports to Investors

■ 33. Amend § 630.40 by revising paragraph (d) introductory text to read as follows:

§ 630.40 Contents of the quarterly report to investors.

* * * * *

(d) *Financial statements.* Interim combined financial statements must be provided in the quarterly report to investors as set forth in paragraphs (d)(1) through (4). Indicate that the financial statements were prepared under the oversight of the System Audit Committee.

* * * * *

Dated: January 24, 2006.

James M. Morris,

Acting Secretary, Farm Credit Administration Board.

[FR Doc. 06–829 Filed 2–1–06; 8:45 am]

BILLING CODE 6705–01–U

Federal Register

Thursday,
February 2, 2006

Part III

Department of Transportation

Federal Aviation Administration

14 CFR Part 33

Airworthiness Standards; Aircraft Engine Standards for Engine Life-Limited Parts; Proposed Rule

DEPARTMENT OF TRANSPORTATION

Federal Aviation Administration

14 CFR Part 33

[Docket No. FAA–2006–23732; Notice No. 06–03]

RIN 2120–AI72

Airworthiness Standards; Aircraft Engine Standards for Engine Life-Limited Parts

AGENCY: Federal Aviation Administration (FAA), DOT.

ACTION: Notice of proposed rulemaking (NPRM).

SUMMARY: The FAA is proposing to amend the certification standards for original and amended type certificates for aircraft engines by modifying the standards for engine life-limited parts. The proposed rule would establish new and uniform standards for the design and testing of life-limited parts for aircraft engines certificated by the FAA, the European Aviation Safety Agency (EASA), and the Joint Aviation Authorities (JAA). Additionally, the proposal would add new standards for the design of reciprocating engine turbocharger rotors. The proposed rule would harmonize part 33 requirements with EASA and JAA requirements.

DATES: Send your comments on or before May 3, 2006.

ADDRESSES: You may send comments [identified by Docket Number FAA–2006–23732] using any of the following methods:

- DOT Docket Web site: Go to *http://dms.dot.gov* and follow the instructions for sending your comments electronically.
- Government-wide rulemaking Web site: Go to *http://www.regulations.gov* and follow the instructions for sending your comments electronically.
- Mail: Docket Management Facility; U.S. Department of Transportation, 400 Seventh Street, SW., Nassif Building, Room PL–401, Washington, DC 20590–001.
- Fax: 1–202–493–2251.
- Hand Delivery: Room PL–401 on the plaza level of the Nassif Building, 400 Seventh Street, SW., Washington, DC, between 9 a.m. and 5 p.m., Monday through Friday, except Federal holidays.

For more information on the rulemaking process, see the **SUPPLEMENTARY INFORMATION** section of this document.

Privacy: We will post all comments we receive, without change, to http://dms.dot.gov, including any personal information you provide. For more information, see the Privacy Act discussion in the **SUPPLEMENTARY INFORMATION** section of this document.

Docket: To read background documents or comments received, go to *http://dms.dot.gov* at any time or to Room PL–401 on the plaza level of the Nassif Building, 400 Seventh Street, SW., Washington, DC, between 9 a.m. and 5 p.m., Monday through Friday, except Federal holidays.

FOR FURTHER INFORMATION CONTACT: Tim Mouzakis, Engine and Propeller Directorate Standards Staff, ANE–110, Engine and Propeller Directorate, Aircraft Certification Service, FAA, New England Region, 12 New England Executive Park, Burlington, Massachusetts 01803–5299; telephone (781) 238–7114; fax (781) 238–7199, e-mail: *timoleon.mouzakis@faa.gov*.

SUPPLEMENTARY INFORMATION:

Comments Invited

The FAA invites interested persons to participate in rulemaking by submitting written data, views, or arguments on this proposed rule. We also invite comments relating to the environmental, energy, federalism, or economic impact that might result from adopting the proposals in this notice. The most helpful comments reference a specific portion of the proposal, explain the reason for any recommended change, and include supporting data. We ask that you send us two copies of written comments.

We will file in the docket all comments we receive, as well as a report summarizing each substantive public contact with FAA personnel concerning this proposed rulemaking. The docket is available for public inspection before and after the comment closing date. If you wish to review the docket in person, go to the address in the **ADDRESSES** section of this preamble between 9 a.m. and 5 p.m., Monday through Friday, except Federal holidays. You may also review the docket using the Internet at the Web address in the **ADDRESSES** section.

Privacy Act: Using the search function of our docket Web site, anyone can find and read the comments received into any of our dockets, including the name of the individual sending the comment (or signing the comment on behalf of an association, business, labor union, etc.). You may review DOT's complete Privacy Act Statement in the **Federal Register** published on April 11, 2000 (65 FR 19477–78) or you may visit *http://dms.dot.gov*.

Before acting on this proposal, we will consider all comments we receive on or before the closing date for comments. We will consider comments filed late if it is possible to do so without incurring expense or delay. We may change this proposal in light of the comments we receive.

If you want the FAA to acknowledge receipt of your comments on this proposal, include with your comments a pre-addressed, stamped postcard on which the docket number appears. We will stamp the date on the postcard and mail it to you.

Proprietary or Confidential Business Information

Do not file in the docket information that you consider to be proprietary or confidential business information. Send or deliver this information directly to the person identified in the **FOR FURTHER INFORMATION CONTACT** section of this document. You must mark the information that you consider proprietary or confidential. If you send the information on a disk or CD ROM, mark the outside of the disk or CD ROM and also identify electronically within the disk or CD ROM the specific information that is proprietary or confidential.

Under 14 CFR 11.35(b), when we are aware of proprietary information filed with a comment, we do not place it in the docket. We hold it in a separate file to which the public does not have access, and place a note in the docket that we have received it. If we receive a request to examine or copy this information, we treat it as any other request under the Freedom of Information Act (5 U.S.C. 552). We process such a request under the DOT procedures found in 49 CFR part 7.

Availability of Rulemaking Documents

You can get an electronic copy using the Internet by:

(1) Searching the Department of Transportation's electronic Docket Management System (DMS) Web page (*http://dms.dot.gov/search*);

(2) Visiting the FAA's Regulations and Policies Web page at *http://www.faa.gov/regulations_policies/*; or

(3) Accessing the Government Printing Office's Web page at *http://www.gpoaccess.gov/fr/index.html*.

You can also get a copy by sending a request to the Federal Aviation Administration, Office of Rulemaking, ARM–1, 800 Independence Avenue, SW., Washington, DC 20591, or by calling (202) 267–9680. Make sure to identify the docket number, notice number, or amendment number of this rulemaking.

Executive Summary

The FAA, along with the Aerospace Industries Association (AIA), which represents turbine engine manufacturers, conducted a review of technologies available to reduce uncontained rotor events in response to the crash of a DC–10 airplane at Sioux City, Iowa, on July 19, 1989. The DC–10 crash was caused by the presence of a material anomaly in the disk titanium forging. Additional accidents, along with industry studies that show a link between manufacturing induced anomalies and rotor cracking, demonstrated the need for damage tolerance requirements and closer cooperation between Engineering and Manufacturing elements of engine manufacturers.

Anomalies of any type are not addressed in determining the proposed life of a rotor, although experience with gas turbine engines has shown that these anomalies can degrade the integrity of high-energy rotors. This proposed rule would supplement existing methodologies for determining proposed life by adding a requirement for a damage tolerance assessment of life-limited parts. The requirement would provide an additional margin of safety and reduce the number of life-limited parts failure due to material, manufacturing, and service induced anomalies. The proposed rule would establish new uniform standards for the design and testing of engine life-limited parts for aircraft engines (§ 33.70) and for the design and construction of reciprocating engine turbocharger rotors (§ 33.34). The proposed rule would also strengthen cooperation between Engineering, Manufacturing, and Service elements of turbine engine manufacturers by requiring that the Manufacturing and Service plans be consistent with the Engineering plan. Finally, this action would harmonize FAA part 33 requirements with the EASA and JAA requirements for aircraft engines (§ 33.70).

Background

Part 33 of Title 14 of the Code of Federal Regulations (14 CFR part 33) prescribes airworthiness standards for original and amended type certificates for aircraft engines. The Joint Aviation Requirements–Engines (JAR–E) and the Certification Specifications–Engines (CS–E) prescribe corresponding airworthiness standards for the certification of aircraft engines by the JAA and EASA respectively. CS–E and JAR–E airworthiness standards are the same. While part 33, JAR–E, and CS–E are similar, they differ in several respects. For applicants seeking certification under both part 33 and CS–E or JAR–E, these differences result in additional costs and delays in the time required for certification.

In August 1989, the FAA Engine and Propeller Directorate met with the JAA, the AIA, and the European Association of Aerospace Industries (AECMA). The purpose of the meeting was to establish a philosophy, guidelines, and a working relationship for the resolution of issues identified as needing harmonization, including the identification of the need for new standards. All parties agreed to work in a partnership to address the harmonization of United States and European engine requirements. This partnership was later expanded to include Transport Canada, the airworthiness authority of Canada.

As part of these harmonization efforts, the FAA assigned the task of evaluating the current standards for § 33.14 as they pertain to the current rotor life methodology to the Aviation Rulemaking Advisory Committee (ARAC) in November 2001. Notice of the task was published in the **Federal Register** on November 7, 2001 (66 FR 56367). Details are in the notice that we cite here.

The current rotor life methodology (safe life method) typically determines the approved life based on the minimum number of cycles required to initiate a crack approximately .030 inches in length. The safe life methodology is founded on the assumption that rotor components are anomaly-free (nominal condition). Consequently, the methodology does not explicitly address the occurrence of anomalies, although some level of tolerance to anomalies is implicitly built in by using design margins, and incorporating factory and field inspections. Under nominal conditions, the safe life method provides a structured process for the design and life management of high-energy rotors, which results in the assurance of structural integrity throughout the life of the rotor.

Service experience with gas turbine engines has demonstrated, however, that material, manufacturing, and service-induced anomalies occur and that these anomalies can degrade the structural integrity of high-energy rotors. Undetectable material processing, manufacturing and service-induced anomalies represent a departure from the assumed nominal conditions. The proposed rule would supplement the existing methodologies with a damage tolerance requirement to provide an added margin for material, manufacturing and service-induced anomalies. The intent of the proposed rule is to remove rotor life-limited parts from service when they reach the life limits based on the safe life methodology. Rotor components would not be allowed to remain in service with cracks.

In 1990, the FAA requested that the Society of Automotive Engineers (SAE) reconvene the Committee on Uncontained Turbine Engine Rotor Events to determine the number and the root cause of uncontained rotor events. The statistics pertaining to uncontained rotor events are reported in the SAE Committee Report Nos. AIR 1537, AIR 4003, and SP–1270. While the committee did not identify any adverse trends, it expressed concern that the projected five percent increase in airline passengers each year could lead to a noticeable increase in the number of aircraft accidents from uncontained rotor events.

As a result of the accident at Sioux City in 1989, which was caused by a material (hard alpha) anomaly in a disk titanium forging, the FAA requested that turbine engine manufacturers, through the AIA, review available technologies to determine if a damage tolerance requirement could be introduced which, if appropriately implemented, would reduce the occurrence of uncontained rotor events. In response to our request, the AIA Rotor Integrity Subcommittee, an industry working group, concluded that the technology existed to address anomalous conditions, although additional development and research would be required. The FAA and AIA also initiated the Rotor Manufacturing (RoMan) project to develop a ''Best Manufacturing Practices'' document to address manufacturing-induced anomalies in high energy rotating components.

Manufacturing induced anomalies have caused other accidents. The crash of an MD–88 aircraft in Pensacola, Florida, in July 1996, was the result of a fan disk rupture. The cause of the fan disk rupture was traced to a severely worked material surface layer in one tie rod bolt hole, introduced during the machining process. Notably, industry data shows that post-forging manufacturing induced anomalies have caused about 25 percent of recent rotor cracking and failure events. SAE Report SP–1270 contains data indicating that manufacturing and material causes account for 5.6 percent of category 1–4 events [1] and 4 percent of category 3 & 4

[1] Category 1: Nacelle damage only; Category 2: Minor aircraft damage; Category 3: Significant aircraft damage or minor injuries; Category 4: Crash landing, hull loss, critical injuries or fatalities.

events, reinforcing the need to conduct damage tolerance assessments and for stronger links between Engineering and Manufacturing.

General Discussion of the Proposals

Rotor disk fracture is the major contributor to propulsion risk (risk of engine failure). The primary causes of turbine engine rotor disk failures are material, manufacturing, and operationally induced anomalies (for example, improper repair, fretting, or corrosion). While compliance with the current requirements has resulted in significant improvements in rotor uncontained failure rates, incorporation of recently developed technologies and methodologies should provide further improvement.

Experience with several types of static parts has demonstrated that fatigue failures have the potential to result in hazardous effects. In the context of this proposed rule, hazardous engine effects are the conditions listed in § 33.75. For example, some high-pressure casing fatigue failures have resulted in uncontained high-energy fragments and fire. In addition, the operating pressures of engines continue to rise, which also increases the potential for hazardous effects. In some instances, the Engine Certification Office has used ''issue papers'' to direct engine manufacturers to evaluate the fatigue capabilities of engine static structures. These ''issue papers'' are based on § 33.19(a), which requires the engine to be designed and constructed to minimize the development of an unsafe condition between overhaul periods. Despite this action, engine case ruptures continue to contribute to propulsion risk. Based on the CAAM (Continued Airworthiness Assessment Methodologies) data, case ruptures is the tenth leading cause of level 3 or 4 events and represents a significant hazard from engines installed on part 25 airplanes.

We are introducing the term ''engine life-limited parts'' in this proposed rule to cover all parts, rotating and static, that rely on meeting prescribed integrity requirements to avoid their primary failure which is likely to result in a hazardous engine effect. The current rules for control of engine life-limited parts are deficient in a number of areas. They do not contain:

- A concise and coherent rule for the overall control of life-limited rotating parts in terms of design, manufacture and service/maintenance;
- Fatigue life and integrity requirements for static parts that meet the definition of an engine life-limited part; or
- Requirements to account for the potential degrading effects of anomalous materials and manufacturing or usage-induced anomalies.

As mentioned earlier, the FAA initiated action to harmonize JAR–E 515 with § 33.14 to eliminate differences and to improve design requirements (for example, the introduction of damage tolerance). Presently, the part 33 and JAR–E requirements for ''engine life-limited parts'' differ in the following aspects:

- Part 33 does not require that engineering assumptions be linked to the manufacturing processes used to produce the part, and
- Part 33 does not require that engineering assumptions be linked to the maintenance processes used in service, and
- Part 33 does not require life limits to be maintained during service operation.

The proposed rule establishes explicit structural integrity requirements for engine life-limited parts, adopting the general intent of JAR–E 515 for both static and rotating engine life-limited parts.

The FAA uses the term ''engine life-limited parts'' while the JAR and EASA rules use the term ''engine critical parts.'' The FAA has decided against using ''engine critical parts'' because a substantial number of FAA documents that deal with PMA (Parts Manufacturer Approval) and repair use the term ''critical.'' ''Critical'' in the context of existing FAA documents has a broader definition that can apply to items other than parts, such as processes, appliances, and characteristics.

The FAA has used industry experience to identify issues that need to be addressed in this rulemaking. The new harmonized proposal defines engine life-limited parts as structural parts whose primary failure is likely to result in a hazardous engine effect. As noted above, current regulations do not contain fatigue life and integrity requirements for engine static parts, yet some of these parts meet the definition of an engine life-limited part. The new harmonized proposal addresses all parts, rotating or static, that meet the definition of an engine life-limited part. The integrity of engine life-limited parts will be established by linking the Engineering, Manufacturing and Service Management Plans.

The current requirement for rotors primarily addresses low-cycle fatigue (LCF), with life limits based on crack initiation using a procedure approved by the FAA. In addition, the applicant is expected to conduct sufficient analysis and testing to evaluate the effects of elevated temperatures and hold times as well as the interaction with other failure mechanisms (for example, high cycle fatigue, creep, and cold-dwell). The new harmonized proposal, through the Engineering Plan, would continue to address LCF in the same manner as the existing rule, but would also introduce new requirements to conduct damage tolerance assessments to limit the potential for failure from material, manufacturing and service-induced anomalies. The proposed rule requires FAA approval of the procedures used to establish life limits and address anomalies. In addition, applicants must identify and control attributes that are critical to the integrity of the part. In the context of this proposed rule, attributes are inherent characteristics of the finished part that determine its capability.

The Manufacturing and Service Management Plans would be developed to ensure that the attributes identified within the Engineering Plan are consistently manufactured and maintained throughout the lifetime of the part.

The general methods and approaches that are used to establish the approved lives for static engine life-limited parts are similar to those used for engine life-limited rotating parts. The life limits of engine life-limited rotating parts are based on the initiation of a crack. However, for some static parts, such as high-pressure casings, the approved life may use a portion of the residual crack growth life in addition to the crack initiation life. The use of residual crack growth life specifically does *not* apply to rotor components. If the approved life includes reliance on the detection of cracks prior to reaching the life limit, the reliability of the crack detection technique should be considered. Any dependence upon crack detection should result in mandatory inspection and be part of the Service Management Plan and included in the Airworthiness Limitations Section of the Instructions for Continued Airworthiness.

Some static part construction techniques may require the use of damage tolerance techniques to determine the life limit. For life-limited static parts that utilize construction techniques that inherently contain anomalies, such as welds and castings, the anomalies should be considered as part of the methodology to establish the approved life. Fracture mechanics is a common method for such assessments.

To ensure a complete understanding of the proposed rule, the following definitions are provided, but are not part of the rule itself:

• *Primary failure:* Failure of a part that is not the result of a prior failure of another part or system.

• *Failure:* Separation of the part into two or more pieces such that the part is no longer whole or complete.

• *Likely to result:* Given that the part has failed regardless of its probability of occurrence, what are the possible effects on the engine and aircraft?

• *Anomalies:* The presence of abnormal material forms or physical shapes that are not permitted by the engineering specifications. Nicks, dings, and dents are examples of physically shaped anomalies. Hard Alpha in titanium is an example of a material anomaly. Cracks that are the result of fatigue are not considered an anomaly because they are the result of normal service usage.

The FAA considers it necessary to completely replace the existing § 33.14 ''Start-stop cyclic stress (low-cycle-fatigue)'' with proposed § 33.70. Section 33.14 is in ''Subpart B—Design and Construction; General'' of part 33 and is applicable to a broad range of products including reciprocating engines, turbo superchargers, and turbine aircraft engines. The FAA developed the new proposed rule, § 33.70, based on principles and experience applicable to turbine aircraft engines, and it is not considered applicable to other products.

Removal of § 33.14 from Subpart B eliminates turbocharger rotor life requirements from part 33. Showing compliance to § 33.14 has been accomplished concurrently with § 23.909(c) by performance of a turbocharger rotor containment test. This shows that failure of these rotors does not produce a hazard to the aircraft, thus satisfying the requirements of § 33.14 without the need to calculate the LCF life. The FAA proposes a new § 33.34 to replace the turbocharger rotor life requirements removed by elimination of § 33.14.

Rulemaking Analyses and Notices

Authority for This Rulemaking

The FAA's authority to issue rules regarding aviation safety is found in Title 49 of the United States Code. Subtitle I, section 106 describes the authority of the FAA Administrator. Subtitle VII, Aviation Programs, describes in more detail the scope of the agency's authority.

This rulemaking is promulgated under the authority described in subtitle VII, part A, subpart III, section 44701, ''General Requirements.'' Under that section, the FAA is charged with prescribing regulations for practices, methods, and procedures the Administrator finds necessary for safety in air commerce, including minimum safety standards for aircraft engines. This regulation is within the scope of that authority because it updates the existing regulations for aircraft engine life-limited parts.

Paperwork Reduction Act

The Paperwork Reduction Act of 1995 (44 U.S.C. 3507(d)) requires that the FAA consider the impact of paperwork and other information collection burdens imposed on the public. We have determined that there are no current new information collection requirements associated with this proposed rule.

International Compatibility

In keeping with U.S. obligations under the Convention on International Civil Aviation, it is FAA policy to comply with International Civil Aviation Organization (ICAO) Standards and Recommended Practices to the maximum extent practicable. The FAA has reviewed the corresponding ICAO Standards and Recommended Practices and has identified no differences with these proposed regulations.

Executive Order 12866 and DOT Regulatory Policies and Procedures

Executive Order 12866, ''Regulatory Planning and Review,'' dated September 30, 1993 (58 FR 51736), directs the FAA to assess both the costs and the benefits of a regulatory change. We are not allowed to propose or adopt a regulation unless we make a reasoned determination that the benefits of the intended regulation justify the costs. Our assessment of this rulemaking indicates that its economic impact is minimal because U.S. turbine engine manufacturers are already manufacturing turbine engines according to European joint aviation requirements that are equivalent to these proposed requirements. Because the costs and benefits of this action do not make it a ''significant regulatory action'' as defined in the Order, we have not prepared a ''regulatory evaluation,'' which is the written cost/benefit analysis ordinarily required for all rulemaking under the DOT Regulatory Policies and Procedures. We do not need to do a full evaluation where the economic impact of a rule is minimal.

Economic Assessment, Regulatory Flexibility Determination, Trade Impact Assessment, and Unfunded Mandates Assessment

Proposed changes to Federal regulations must undergo several economic analyses. First, Executive Order 12866 directs that each Federal agency shall propose or adopt a regulation only upon a reasoned determination that the benefits of the intended regulation justify its costs. Second, the Regulatory Flexibility Act of 1980 requires agencies to analyze the economic impact of regulatory changes on small entities. Third, the Trade Agreements Act of 1979 prohibits agencies from setting standards that create unnecessary obstacles to the foreign commerce of the United States. In developing U.S. standards, this Trade Act requires Federal agencies to consider international standards and, where appropriate, that they be the basis for U.S. standards. Fourth, the Unfunded Mandates Reform Act of 1995 requires Federal agencies to prepare a written assessment of the costs, benefits and other effects of proposed or final rules that include a Federal mandate likely to result in the expenditure by State, local or tribal governments, in the aggregate, or by the private sector, of $100 million or more (adjusted annually for inflation) in any one year.

In conducting these analyses, the FAA has determined that this proposed rule (1) has benefits that justify its costs, is not ''a significant regulatory action'' as defined in section 3(f) of Executive Order 12866, and is not ''significant'' as defined in DOT's Regulatory Policies and Procedures; (2) would not have a significant economic impact on a substantial number of small entities; (3) would reduce barriers to international trade; and (4) does not impose an unfunded mandate on state, local, or tribal governments, or the private sector. These analyses, available in the docket, are summarized below.

Presently, U.S. turbine engine manufacturers must satisfy the certification requirements of both the FAA and the European joint aviation requirements to market turbine engines in both the United States and Europe. Meeting two different sets of certification requirements can increase the costs of developing turbine engines often with no associated safety benefits. In the interests of fostering international trade, lowering the cost of aircraft and/or engine development, and making the certification process more efficient, the FAA, the European Aviation Safety Agency, and equipment manufacturers have been working to create, to the maximum extent possible, a uniform set of certification requirements accepted in both the United States and Europe. This endeavor is referred to as ''harmonization.''

This proposal replaces § 33.14 with new §§ 33.34 and 33.70 to reflect the ''more stringent'' requirements in JAR–

E 515 or CS–E 515, ''Engine Critical Parts.'' The FAA has concluded (for the reasons previously discussed in the preamble) that the adoption of these JAR–E or CS–E requirements into the federal aviation regulations is the most efficient way to harmonize the separately derived requirements. In so doing, the existing level of safety is preserved.

The FAA estimates that there would be minimal (if any) costs associated with this proposed rule. The major turbine engine manufacturers were members of the ARAC working group that developed the proposed requirements. These manufacturers indicate that all such engines sold overseas are currently certificated under JAR–E 515 or CS–E 515; thus, U.S. engine manufacturers would incur no additional costs resulting from this proposal.

There are, however, potential safety benefits in codifying what is now ''industry practice'' into a permanent U.S. standard. This action assures that any current or future U.S. turbine engine manufacturer choosing not to market its engines overseas would nevertheless be required to meet ''new'' (in federal aviation regulations) more stringent standards. As noted earlier, fatigue failures have the potential to result in hazardous effects (some high-pressure casing fatigue failures have led to uncontained high-energy fragments and fire), with potential for loss of lives and/or serious injuries.

In addition, this proposed rule fosters international trade as it accepts international standards as the basis for U.S. regulation(s). With minimal costs and potential benefits, the FAA finds this proposal to be clearly cost-beneficial.

Regulatory Flexibility Determination

The Regulatory Flexibility Act of 1980 directs the FAA to fit regulatory requirements to the scale of the business, organizations, and governmental jurisdictions subject to the regulation. We are required to determine whether a proposed or final action will have a ''significant economic impact on a substantial number of small entities'' as they are defined in the Act. If we find that the action will have a significant impact, we must do a regulatory flexibility analysis.

None of the turbine engine manufacturers in the ARAC Working Group who helped develop the proposed requirements are small entities (they each have 1,500 or more employees). Consequently, we contacted another turbine engine manufacturer that is not an ARAC member but is a small entity. That manufacturer affirmed that meeting the proposed requirements would result in minimal incremental costs. We found that there are no other small entity turbine engine manufacturers who would be affected by this proposal. Therefore, we certify that this proposed action would not have a significant economic impact on a substantial number of small entities.

Trade Impact Assessment

The Trade Agreements Act of 1979 prohibits Federal agencies from establishing any standards or engaging in related activities that create unnecessary obstacles to the foreign commerce of the United States. Legitimate domestic objectives, such as safety, are not considered unnecessary obstacles. The statute also requires consideration of international standards and, where appropriate, that they be the basis for U.S. standards. The FAA has assessed the effect of this proposed rulemaking and determined that it will reduce trade barriers by reducing differences between the U.S. and European regulations.

Unfunded Mandates Assessment

The Unfunded Mandates Reform Act of 1995 (the Act) is intended, among other things, to curb the practice of imposing unfunded Federal mandates on State, local, and tribal governments. Title II of the Act requires each Federal agency to prepare a written statement assessing the effects of any Federal mandate in a proposed or final agency rule that may result in an expenditure of $100 million or more (adjusted annually for inflation) in any one year by State, local, and tribal governments, in the aggregate, or by the private sector; such a mandate is deemed to be a ''significant regulatory action.'' The FAA currently uses an inflation-adjusted value of $120.7 million in lieu of $100 million.

This NPRM does not contain such a mandate. The requirements of Title II of the Act, therefore, do not apply.

Executive Order 13132, Federalism

The FAA has analyzed this proposed rule under the principles and criteria of Executive Order 13132, Federalism. We determined that this action would not have a substantial direct effect on the States, on the relationship between the National Government and the States, or on the distribution of power and responsibilities among the various levels of government. Therefore, we determined that this proposed rulemaking would not have federalism implications.

Environmental Analysis

FAA Order 1050.1E identifies FAA actions that are categorically excluded from preparation of an environmental assessment or environmental impact statement under the National Environmental Policy Act in the absence of extraordinary circumstances. The FAA has determined that this proposed rule qualifies for the categorical exclusion identified in Chapter 3, paragraph 312d and involves no extraordinary circumstances.

Regulations That Significantly Affect Energy Supply, Distribution, or Use

The FAA has analyzed this NPRM under Executive Order 13211, Actions Concerning Regulations that Significantly Affect Energy Supply, Distribution, or Use (May 18, 2001). We have determined that it is not a ''significant energy action'' under the executive order because it is not a ''significant regulatory action'' under Executive Order 12866, and it is not likely to have a significant adverse effect on the supply, distribution, or use of energy.

List of Subjects in 14 CFR Part 33

Air transportation, Aircraft, Aviation safety, Safety.

The Proposed Amendment

In consideration of the foregoing, the Federal Aviation Administration proposes to amend part 33 of Title 14 Code of Federal Regulations as follows:

PART 33—AIRWORTHINESS STANDARDS: AIRCRAFT ENGINES

1. The authority citation for part 33 continues to read as follows:

Authority: 49 U.S.C. 106(g), 40113, 44701–44702, 44704.

§ 33.14 [Removed]

2. Remove § 33.14.

3. Add new § 33.34 to read as follows:

§ 33.34 Turbocharger rotors.

Each turbocharger case must be designed and constructed to be able to contain fragments of a compressor or turbine that fails at the highest speed that is obtainable with normal speed control devices inoperative.

4. Add new § 33.70 to read as follows:

§ 33.70 Engine life-limited parts.

Engine life-limited parts are those parts whose primary failure is likely to result in a hazardous engine effect. Typically engine life-limited parts may include disks, spacers, hubs, shafts, high-pressure casings, and non-redundant mount components. For the purposes of this section, a hazardous

engine effect is any of the conditions listed in § 33.75 of this part. The applicant will establish the integrity of each engine life-limited part by:

(a) An Engineering Plan, the execution of which establishes and maintains that the combinations of loads, material properties, environmental influences and operating conditions, including the effects of parts influencing these parameters, are sufficiently well known or predictable, by validated analysis, test or service experience, to allow engine life-limited parts to be withdrawn from service at an approved life before hazardous engine effects can occur. Applicants must perform appropriate Damage Tolerance assessments to address the potential for failure from material, manufacturing, and service-induced anomalies within the approved life of the part. The FAA must approve the procedures by which the approved life is determined. Applicants must publish a list of the life-limited engine parts and the approved life for each part in the Airworthiness Limitations Section of the Instructions for Continued Airworthiness as required by § 33.4 of this part.

(b) A Manufacturing Plan that identifies the specific manufacturing constraints necessary to consistently produce engine life-limited parts with the attributes required by the Engineering Plan.

(c) A Service Management Plan that defines in-service processes for maintenance and repair of engine life-limited parts that will maintain attributes consistent with those required by the Engineering Plan. These processes will become part of the Instructions for Continued Airworthiness.

Issued in Washington, DC, on January 26, 2006.

Dorenda D. Baker,

Acting Director, Aircraft Certification Service.

[FR Doc. 06–950 Filed 2–1–06; 8:45 am]

BILLING CODE 4910–13–P

Reader Aids

Federal Register

Vol. 71, No. 22

Thursday, February 2, 2006

CUSTOMER SERVICE AND INFORMATION

Federal Register/Code of Federal Regulations	
General Information, indexes and other finding aids	**202–741–6000**
Laws	**741–6000**
Presidential Documents	
Executive orders and proclamations	**741–6000**
The United States Government Manual	**741–6000**
Other Services	
Electronic and on-line services (voice)	**741–6020**
Privacy Act Compilation	**741–6064**
Public Laws Update Service (numbers, dates, etc.)	**741–6043**
TTY for the deaf-and-hard-of-hearing	**741–6086**

ELECTRONIC RESEARCH

World Wide Web

Full text of the daily Federal Register, CFR and other publications is located at: **http://www.gpoaccess.gov/nara/index.html**

Federal Register information and research tools, including Public Inspection List, indexes, and links to GPO Access are located at: **http://www.archives.gov/federal_register/**

E-mail

FEDREGTOC-L (Federal Register Table of Contents LISTSERV) is an open e-mail service that provides subscribers with a digital form of the Federal Register Table of Contents. The digital form of the Federal Register Table of Contents includes HTML and PDF links to the full text of each document.

To join or leave, go to **http://listserv.access.gpo.gov** and select *Online mailing list archives, FEDREGTOC-L, Join or leave the list (or change settings);* then follow the instructions.

PENS (Public Law Electronic Notification Service) is an e-mail service that notifies subscribers of recently enacted laws.

To subscribe, go to **http://listserv.gsa.gov/archives/publaws-l.html** and select *Join or leave the list (or change settings);* then follow the instructions.

FEDREGTOC-L and **PENS** are mailing lists only. We cannot respond to specific inquiries.

Reference questions. Send questions and comments about the Federal Register system to: **fedreg.info@nara.gov**

The Federal Register staff cannot interpret specific documents or regulations.

FEDERAL REGISTER PAGES AND DATE, FEBRUARY

5155–5578 1
5579–5776 2

CFR PARTS AFFECTED DURING FEBRUARY

At the end of each month, the Office of the Federal Register publishes separately a List of CFR Sections Affected (LSA), which lists parts and sections affected by documents published since the revision date of each title.

3 CFR

Proclamations:
7976 5155
7977 5579

7 CFR

905 5157
Proposed Rules:
985 5183

12 CFR

611 5740
612 5740
614 5740
615 5740
618 5740
619 5740
620 5740
630 5740

14 CFR

39 .....5159, 5162, 5581, 5584
Proposed Rules:
23 5554
25 5554
27 5554
29 5554
33 5770
39 .....5620, 5623, 5626
158 5188

16 CFR

100 5165

17 CFR

1 5587
145 5587
147 5587
232 5596

21 CFR

Proposed Rules:
203 5200
205 5200

22 CFR

Proposed Rules:
62 5627

27 CFR

19 5598
24 5598
25 5598
26 5598
70 5598
Proposed Rules:
19 5629
24 5629
25 5629
26 5629
70 5629

30 CFR

925 5548

31 CFR

215 5737

32 CFR

Proposed Rules:
275 5631

33 CFR

117 5170
165 5172
401 5605
Proposed Rules:
Ch. I 5204

38 CFR

Proposed Rules:
17 5204

40 CFR

52 .....5172, 5174, 5607
Proposed Rules:
52 .....5205, 5211
86 5426
600 5426

45 CFR

Proposed Rules:
2554 5211

47 CFR

73 5176
76 5176
Proposed Rules:
64 5221

50 CFR

223 5178
229 5180
Proposed Rules:
17 5516

REMINDERS

The items in this list were editorially compiled as an aid to Federal Register users. Inclusion or exclusion from this list has no legal significance.

RULES GOING INTO EFFECT FEBRUARY 2, 2006

AGRICULTURE DEPARTMENT

Agricultural Marketing Service

Oranges, grapefruit, tangerines, and tangelos grown in—

Florida; published 2-1-06

AGRICULTURE DEPARTMENT

Food and Nutrition Service

Child nutrition programs:

Child and Adult Care Food Program—

Children receiving meals in emergency shelters; age limits; published 1-3-06

COMMODITY FUTURES TRADING COMMISSION

Commodity Exchange Act:

Futures commission merchants and specified foreign currency forward and inventory capital charges; alternative market risk and credit risk capital charges; published 2-2-06

DEFENSE DEPARTMENT

Federal Acquisition Regulation (FAR):

Libya; sanctions removed; published 1-3-06

Performance-based service acquisition; published 1-3-06

Transportation; standard industry practices; published 1-3-06

ENVIRONMENTAL PROTECTION AGENCY

Air quality implementation plans; approval and promulgation; various States; air quality planning purposes; designation of areas:

Virginia; published 1-3-06

Air quality implementation plans; approval and promulgation; various States:

Maryland; published 2-2-06

GENERAL SERVICES ADMINISTRATION

Federal Acquisition Regulation (FAR):

Libya; sanctions removed; published 1-3-06

Performance-based service acquisition; published 1-3-06

Transportation; standard industry practices; published 1-3-06

NATIONAL AERONAUTICS AND SPACE ADMINISTRATION

Federal Acquisition Regulation (FAR):

Libya; sanctions removed; published 1-3-06

Performance-based service acquisition; published 1-3-06

Transportation; standard industry practices; published 1-3-06

TRANSPORTATION DEPARTMENT

Federal Aviation Administration

Airworthiness directives:

Raytheon; published 2-2-06

COMMENTS DUE NEXT WEEK

AGRICULTURE DEPARTMENT

Food Safety and Inspection Service

Meat and poultry inspection:

Nutrient content claims; definition of term healthy; comments due by 2-10-06; published 1-11-06 [FR 06-00268]

COMMERCE DEPARTMENT

National Oceanic and Atmospheric Administration

Fishery conservation and management:

West Coast States and Western Pacific fisheries—

Pacific Coast groundfish; comments due by 2-6-06; published 12-7-05 [FR 05-23735]

Pacific Fishery Management Council; meetings; comments due by 2-8-06; published 11-21-05 [FR 05-22992]

DEFENSE DEPARTMENT

Acquisition regulations:

Carbon, alloy, and armor steel plate restriction; comments due by 2-7-06; published 12-9-05 [FR 05-23723]

Required sources of supply; comments due by 2-7-06; published 12-9-05 [FR 05-23724]

Federal Acquisition Regulation (FAR):

Inflation adjustment of acquisition-related thresholds; comments due by 2-10-06; published 12-12-05 [FR 05-16971]

ENVIRONMENTAL PROTECTION AGENCY

Air pollutants, hazardous; national emission standards:

Dry cleaning facilities; perchloroethylene emission standards; comments due by 2-6-06; published 12-21-05 [FR 05-24071]

Metal cans; surface coating; comments due by 2-6-06; published 1-6-06 [FR 06-00068]

Air pollution; standards of performance for new stationary sources:

Municipal waste combustion units, large; comments due by 2-6-06; published 12-19-05 [FR 05-23968]

Air quality implementation plans; approval and promulgation; various States:

Maine; comments due by 2-6-06; published 1-5-06 [FR E5-08221]

Michigan; comments due by 2-6-06; published 1-5-06 [FR E5-08316]

Virginia; comments due by 2-6-06; published 1-6-06 [FR E6-00037]

Pesticide programs:

Risk assessments—

Azinphos-methyl; comments due by 2-6-06; published 12-7-05 [FR 05-23719]

Pesticides; tolerances in food, animal feeds, and raw agricultural commodities:

Iodomethane; comments due by 2-6-06; published 1-6-06 [FR E6-00026]

Polymers; molecular weight limitations removed; comments due by 2-6-06; published 12-7-05 [FR 05-23667]

Water programs:

Oil pollution prevention; spill prevention, control and countermeasure plan requirements; amendments; comments due by 2-10-06; published 12-12-05 [FR 05-23917]

FEDERAL COMMUNICATIONS COMMISSION

Common carrier services:

Federal-State Joint Board on Universal Service—

High-cost universal service support; comments due by 2-10-06; published 1-11-06 [FR 06-00159]

Digital television stations; table of assignments:

Digital television distributed transmission system technologies; comments due by 2-6-06; published 12-7-05 [FR 05-23658]

Radio stations; table of assignments:

Oklahoma; comments due by 2-6-06; published 1-4-06 [FR E5-08253]

GENERAL SERVICES ADMINISTRATION

Federal Acquisition Regulation (FAR):

Inflation adjustment of acquisition-related thresholds; comments due by 2-10-06; published 12-12-05 [FR 05-16971]

HEALTH AND HUMAN SERVICES DEPARTMENT

Food and Drug Administration

Food for human consumption:

Food labeling—

Nutrient content claim "lean"; expanded use; comments due by 2-8-06; published 11-25-05 [FR 05-23293]

Medical devices:

Ear, nose and throat devices—

Tinnitus masker; comments due by 2-6-06; published 11-8-05 [FR 05-22269]

HEALTH AND HUMAN SERVICES DEPARTMENT

Inspector General Office, Health and Human Services Department

Medicare and State healthcare programs; fraud and abuse:

New safe harbors and special fraud alerts; comments due by 2-7-06; published 12-9-05 [FR 05-23624]

HOMELAND SECURITY DEPARTMENT

Coast Guard

Drawbridge operations:

New Jersey; comments due by 2-6-06; published 12-21-05 [FR E5-07632]

Regattas and marine parades:

Volvo Ocean Race (2005-2006); comments due by 2-6-06; published 12-8-05 [FR 05-23753]

INTERIOR DEPARTMENT

Fish and Wildlife Service

Endangered and threatened species:

Critical habitat designations—
Canada lynx; comments due by 2-7-06; published 11-9-05 [FR 05-22193]

MANAGEMENT AND BUDGET OFFICE

Federal Procurement Policy Office

Acquisition regulations:
Cost Accounting Standards Board—
Acquisition threshold changes; comments due by 2-10-06; published 12-12-05 [FR 05-23647]

NATIONAL AERONAUTICS AND SPACE ADMINISTRATION

Federal Acquisition Regulation (FAR):
Inflation adjustment of acquisition-related thresholds; comments due by 2-10-06; published 12-12-05 [FR 05-16971]

NATIONAL CREDIT UNION ADMINISTRATION

Truth in savings:
Bounced-check or courtesy overdraft protection; comments due by 2-6-06; published 12-8-05 [FR 05-23711]

NUCLEAR REGULATORY COMMISSION

Production and utilization facilities; domestic licensing:
Loss-of-coolant accident technical requirements; risk-informed changes; comments due by 2-6-06; published 11-7-05 [FR E5-06090]

RAILROAD RETIREMENT BOARD

Railroad Retirement Act and Railroad Unemployment Insurance Act:
Reconsideration and appeals; video teleconferencing; comments due by 2-7-06; published 12-9-05 [FR 05-23607]

Railroad Unemployment Insurance Act:
Sickness benefits paid; electronic notification by railroad employers of settlements and final judgments; comments due by 2-7-06; published 12-9-05 [FR 05-23606]

TRANSPORTATION DEPARTMENT

Federal Aviation Administration

Air traffic operating and flight rules, etc.:
Washington, DC, metropolitan special flight rules area; certain aircraft operations flight restrictions; comments due by 2-6-06; published 11-7-05 [FR 05-22261]

Airworthiness directives:
Boeing; comments due by 2-6-06; published 12-6-05 [FR 05-23601]
Cirrus Design Corp.; comments due by 2-7-06; published 12-8-05 [FR 05-23772]
Empresa Brasileira de Aeronautica, S. A. (EMBRAER); comments due by 2-6-06; published 12-8-05 [FR 05-23656]
Fokker; comments due by 2-10-06; published 12-12-05 [FR 05-23779]
General Electric Co.; comments due by 2-10-06; published 12-12-05 [FR 05-23898]
Hamilton Sundstrand; comments due by 2-6-06; published 12-8-05 [FR 05-23770]

Standard instrument approach procedures; comments due by 2-10-06; published 12-12-05 [FR 05-23826]

TREASURY DEPARTMENT

Internal Revenue Service

Income, estate and gift, excise taxes, and procedure and administration:
Returns; filing time extension; comments due by 2-6-06; published 11-7-05 [FR 05-21982]

TREASURY DEPARTMENT

Alcohol and Tobacco Tax and Trade Bureau

Alcohol; viticultural area designations:
Tracy Hills, San Joaquin and Stanislaus Counties, CA; comments due by 2-6-06; published 12-7-05 [FR 05-23681]

Alcoholic beverages:
Labeling and advertising; use of word pure or its variants; comments due by 2-6-06; published 12-7-05 [FR 05-23680]

LIST OF PUBLIC LAWS

This is a continuing list of public bills from the current session of Congress which have become Federal laws. It may be used in conjunction with "P L U S" (Public Laws Update Service) on 202–741–6043. This list is also available online at *http://www.archives.gov/federal-register/laws.html*.

The text of laws is not published in the **Federal Register** but may be ordered in "slip law" (individual pamphlet) form from the Superintendent of Documents, U.S. Government Printing Office, Washington, DC 20402 (phone, 202–512–1808). The text will also be made available on the Internet from GPO Access at *http://www.gpoaccess.gov/plaws/index.html*. Some laws may not yet be available.

H.R. 4340/P.L. 109–169

United States-Bahrain Free Trade Agreement Implementation Act (Jan. 11, 2006; 119 Stat. 3581)

Last List January 12, 2006

Public Laws Electronic Notification Service (PENS)

PENS is a free electronic mail notification service of newly enacted public laws. To subscribe, go to *http://listserv.gsa.gov/archives/publaws-l.html*

Note: This service is strictly for E-mail notification of new laws. The text of laws is not available through this service. **PENS** cannot respond to specific inquiries sent to this address.