Federal Register

4–27–06 Thursday
Vol. 71 No. 81 Apr. 27, 2006

Pages 24803–25058

The **FEDERAL REGISTER** (ISSN 0097–6326) is published daily, Monday through Friday, except official holidays, by the Office of the Federal Register, National Archives and Records Administration, Washington, DC 20408, under the Federal Register Act (44 U.S.C. Ch. 15) and the regulations of the Administrative Committee of the Federal Register (1 CFR Ch. I). The Superintendent of Documents, U.S. Government Printing Office, Washington, DC 20402 is the exclusive distributor of the official edition. Periodicals postage is paid at Washington, DC.

The **FEDERAL REGISTER** provides a uniform system for making available to the public regulations and legal notices issued by Federal agencies. These include Presidential proclamations and Executive Orders, Federal agency documents having general applicability and legal effect, documents required to be published by act of Congress, and other Federal agency documents of public interest.

Documents are on file for public inspection in the Office of the Federal Register the day before they are published, unless the issuing agency requests earlier filing. For a list of documents currently on file for public inspection, see *www.archives.gov.*

The seal of the National Archives and Records Administration authenticates the Federal Register as the official serial publication established under the Federal Register Act. Under 44 U.S.C. 1507, the contents of the **Federal Register** shall be judicially noticed.

The **Federal Register** is published in paper and on 24x microfiche. It is also available online at no charge as one of the databases on GPO Access, a service of the U.S. Government Printing Office.

The online edition of the **Federal Register** *www.gpoaccess.gov/nara,* available through GPO Access, is issued under the authority of the Administrative Committee of the Federal Register as the official legal equivalent of the paper and microfiche editions (44 U.S.C. 4101 and 1 CFR 5.10). It is updated by 6 a.m. each day the **Federal Register** is published and includes both text and graphics from Volume 59, Number 1 (January 2, 1994) forward.

For more information about GPO Access, contact the GPO Access User Support Team, call toll free 1-888-293-6498; DC area 202-512-1530; fax at 202-512-1262; or via e-mail at *gpoaccess@gpo.gov.* The Support Team is available between 7:00 a.m. and 9:00 p.m. Eastern Time, Monday–Friday, except official holidays.

The annual subscription price for the **Federal Register** paper edition is $749 plus postage, or $808, plus postage, for a combined **Federal Register, Federal Register** Index and List of CFR Sections Affected (LSA) subscription; the microfiche edition of the **Federal Register** including the **Federal Register** Index and LSA is $165, plus postage. Six month subscriptions are available for one-half the annual rate. The prevailing postal rates will be applied to orders according to the delivery method requested. The price of a single copy of the daily **Federal Register,** including postage, is based on the number of pages: $11 for an issue containing less than 200 pages; $22 for an issue containing 200 to 400 pages; and $33 for an issue containing more than 400 pages. Single issues of the microfiche edition may be purchased for $3 per copy, including postage. Remit check or money order, made payable to the Superintendent of Documents, or charge to your GPO Deposit Account, VISA, MasterCard, American Express, or Discover. Mail to: New Orders, Superintendent of Documents, P.O. Box 371954, Pittsburgh, PA 15250-7954; or call toll free 1-866-512-1800, DC area 202-512-1800; or go to the U.S. Government Online Bookstore site, see *bookstore.gpo.gov.*

There are no restrictions on the republication of material appearing in the **Federal Register.**

How To Cite This Publication: Use the volume number and the page number. Example: 71 FR 12345.

Postmaster: Send address changes to the Superintendent of Documents, Federal Register, U.S. Government Printing Office, Washington DC 20402, along with the entire mailing label from the last issue received.

SUBSCRIPTIONS AND COPIES

PUBLIC

Subscriptions:

Paper or fiche	**202–512–1800**
Assistance with public subscriptions	**202–512–1806**

General online information **202–512–1530; 1–888–293–6498**

Single copies/back copies:

Paper or fiche	**202–512–1800**
Assistance with public single copies	**1–866–512–1800 (Toll-Free)**

FEDERAL AGENCIES

Subscriptions:

Paper or fiche	**202–741–6005**
Assistance with Federal agency subscriptions	**202–741–6005**

FEDERAL REGISTER WORKSHOP

THE FEDERAL REGISTER: WHAT IT IS AND HOW TO USE IT

FOR: Any person who uses the Federal Register and Code of Federal Regulations.

WHO: Sponsored by the Office of the Federal Register.

WHAT: Free public briefings (approximately 3 hours) to present:

1. The regulatory process, with a focus on the Federal Register system and the public's role in the development of regulations.

2. The relationship between the Federal Register and Code of Federal Regulations.

3. The important elements of typical Federal Register documents.

4. An introduction to the finding aids of the FR/CFR system.

WHY: To provide the public with access to information necessary to research Federal agency regulations which directly affect them. There will be no discussion of specific agency regulations.

WHEN: Tuesday, May 9, 2006
9:00 a.m.–Noon

WHERE: Office of the Federal Register
Conference Room, Suite 700
800 North Capitol Street, NW.
Washington, DC 20002

RESERVATIONS: (202) 741–6008

Printed on recycled paper.

Contents

Federal Register

Vol. 71, No. 81

Thursday, April 27, 2006

Agricultural Marketing Service
PROPOSED RULES
National Organic Program:
Organic and nonorganic product use (livestock) Harvey v. Johanns; revisions, 24820–24824

Agriculture Department
See Agricultural Marketing Service
See Animal and Plant Health Inspection Service

Alcohol, Tobacco, Firearms, and Explosives Bureau
NOTICES
Agency information collection activities; proposals, submissions, and approvals, 24861–24868

Animal and Plant Health Inspection Service
RULES
Exportation and importation of animals and animal products:
Contagious equine metritis—
States approved to receive stallions and mares from affected regions; Indiana, 24806–24808
Interstate transportation of animals and animal products (quarantine):
Tuberculosis in cattle, bison, and captive cervids—
Accredited herd status term validity, reaccreditation test, etc., 24803–24806
PROPOSED RULES
Plant-related quarantine, foreign:
Fruits and vegetables import regulations; revision, 25010–25057

Antitrust Division
NOTICES
National cooperative research notifications:
Collaboration Agreement for High Performance Buildings, 24868

Centers for Disease Control and Prevention
NOTICES
Meetings:
National Center for Injury Prevention and Control Initial Review Group, 24855–24856

Civil Rights Commission
NOTICES
Meetings; Sunshine Act, 24839

Commerce Department
See Industry and Security Bureau
See International Trade Administration
See National Oceanic and Atmospheric Administration

Copyright Office, Library of Congress
PROPOSED RULES
Copyright office and procedures:
Royalties; electronic payment, 24829–24831

Defense Department
NOTICES
Base closures and realignments; list, 24842–24843
Committees; establishment, renewal, termination, etc.:
Women in Services Advisory Committee, 24843
Meetings:
Uniform Formulary Beneficiary Advisory Panel, 24843–24844

Education Department
PROPOSED RULES
State-administered programs; reporting requirements, 24824–24829
NOTICES
Grants and cooperative agreements; availability, etc.:
Special education and rehabilitative services—
Assistive Technology Alternative Financing Program, 24844

Energy Department
See Energy Efficiency and Renewable Energy Office
See Federal Energy Regulatory Commission

Energy Efficiency and Renewable Energy Office
RULES
Energy conservation:
Distribution transformers; test procedures, 24972–25008
NOTICES
Agency information collection activities; proposals, submissions, and approvals, 24844–24845

Environmental Protection Agency
RULES
Reporting and recordkeeping requirements; technical amendment, 24817–24819
PROPOSED RULES
Air quality implementation plans; approval and promulgation; various States:
Pennsylvania, 24834–24836
NOTICES
Reports and guidance documents; availability, etc.:
Clean Water Act Section 106; grant awards to Indian Tribes, 24852–24854

Executive Office of the President
See Management and Budget Office

Federal Aviation Administration
RULES
Airworthiness directives:
MD Helicopters, Inc., 24808–24812
Airworthiness standards:
Special conditions—
Airbus Model A380-800 airplane; correction, 24808
Class E airspace, 24812
NOTICES
Airports:
Denver International Airport, CO; Southwest Airlines Co. operations; general conformity determination, 24903–24908
Air traffic operating and flight rules, etc.:
High density traffic airports; takeoff and landing slots, slot exemption lottery, and slot allocation procedures—
International slots for winter 2006 scheduling season; submission deadline, 24902–24903
Exemption petitions; summary and disposition, 24908

Meetings:
Commercial Space Transportation Advisory Committee, 24908–24909
RTCA, Inc., 24909

Federal Bureau of Investigation
NOTICES
Agency information collection activities; proposals, submissions, and approvals, 24868–24870

Federal Election Commission
NOTICES
Meetings; Sunshine Act, 24854

Federal Energy Regulatory Commission
NOTICES
Electric rate and corporate regulation filings, 24847–24849
Hydroelectric applications, 24849–24851
Off-the-record communications, 24851–24852
Applications, hearings, determinations, etc.:
CenterPoint Energy Gas Transmission Co., 24845
CenterPoint Energy-Mississippi River Transmission Corp., 24845
Midwestern Gas Transmission Co., 24845–24846
New England Gas Co. et al., 24846
Northern Natural Gas Co., 24846–24847
Overthrust Pipeline Co., 24847

Federal Highway Administration
NOTICES
Environmental statements; notice of intent:
Butler Co, PA; cancellation, 24909
Gaston and Mecklenburg Counties, NC, 24909–24910
Highway planning and construction; licenses, permits, approvals, etc.:
East Lynn Canal Highway, AK, 24910–24911
US Route 24 Highway Project, OH, 24911–24912

Federal Maritime Commission
NOTICES
Agreements; additional information requests:
HSDG/FOML Agreement, 24854

Federal Motor Carrier Safety Administration
NOTICES
Agency information collection activities; proposals, submissions, and approvals, 24912–24913

Fish and Wildlife Service
RULES
Endangered and threatened species:
Critical habitat designations—
Cactus ferruginous pygmy-owl; Arizona distinct population segment; removal from list; correction, 24916
PROPOSED RULES
Endangered and threatened species:
Critical habitat designations—
Cactus ferruginous pygmy-owl; Arizona distinct population segment; removal from list; correction, 24916

Food and Drug Administration
RULES
Animal drugs, feeds, and related products:
Lasalocid and chlortetracycline, 24814–24817
NOTICES
Food additive petitions:
Danisco USA, Inc., 24856
Reports and guidance documents; availability, etc.:
Bar code label requirements; questions and answers, 24856–24857
Plasmapheresis and immunization programs; source plasma donors; informed consent recommendations, 24857–24858

General Services Administration
NOTICES
Meetings:
Small Business Advisory Committee, 24854

Health and Human Services Department
See Centers for Disease Control and Prevention
See Food and Drug Administration
See Health Resources and Services Administration
NOTICES
Committees; establishment, renewal, termination, etc.:
Human Research Protections, Secretary's Advisory Committee, 24854–24855

Health Resources and Services Administration
NOTICES
Grants and cooperative agreements; availability, etc.:
C.W. Bill Young Cell Transplantation Program, 24858–24859

Homeland Security Department
NOTICES
Meetings:
National Security Telecommunications Advisory Committee, 24859

Industry and Security Bureau
RULES
Chemical Weapons Convention regulations:
Requirements update and clarification, 24918–24970

Interior Department
See Fish and Wildlife Service
See Land Management Bureau
See Minerals Management Service

International Trade Administration
NOTICES
Antidumping:
Cased pencils from—
China, 24839
Polyethylene retail carrier bags from—
China, 24839–24840
Polyvinyl alcohol from—
China, 24840
Wooden bedroom furniture from—
China, 24840–24841

International Trade Commission
NOTICES
Import investigations:
Carbon and alloy seamless standard, line, and pressure pipe from—
Various countries, 24860
Sulfanilic acid from—
China and India, 24860–24861

Justice Department
See Alcohol, Tobacco, Firearms, and Explosives Bureau
See Antitrust Division
See Federal Bureau of Investigation

See Justice Programs Office

Justice Programs Office
NOTICES
Agency information collection activities; proposals, submissions, and approvals, 24870–24871

Land Management Bureau
PROPOSED RULES
Land resource management:
Rights-of-way—
Linear right-of-way rental schedule; update, 24836–24838
NOTICES
Meetings:
California Desert District Advisory Council, 24859–24860

Library of Congress
See Copyright Office, Library of Congress

Management and Budget Office
NOTICES
Audits of States, local governments, and non-profit organizations (Circular A-133), 24872
Designated Federal Entities and Federal Entities; list, 24872–24875

Minerals Management Service
NOTICES
Committees; establishment, renewal, termination, etc.:
Royalty Policy Committee, 24860

National Archives and Records Administration
NOTICES
Agency information collection activities; proposals, submissions, and approvals, 24871

National Oceanic and Atmospheric Administration
NOTICES
Committees; establishment, renewal, termination, etc.:
Channel Islands National Marine Sanctuary Advisory Council, 24841–24842
Meetings:
Hydrographic Services Review Panel, 24842

Nuclear Regulatory Commission
NOTICES
Reports and guidance documents; availability, etc.:
Generic letters—
Potentially nonconforming Hemyc and MT fire barrier configurations, 24871–24872

Office of Management and Budget
See Management and Budget Office

Postal Rate Commission
NOTICES
Meetings:
Declining block rates; design model; briefing, 24875

Railroad Retirement Board
NOTICES
Meetings; Sunshine Act, 24875

Research and Innovative Technology Administration
NOTICES
Agency information collection activities; proposals, submissions, and approvals, 24913–24914

Securities and Exchange Commission
NOTICES
Joint industry plan:
Nasdaq Stock Market LLC, 24875–24876
Securities:
Suspension of trading—
Bullhide Corp., 24876
Skygivers, Inc., 24876
Self-regulatory organizations; proposed rule changes:
Chicago Stock Exchange, Inc., 24876–24878
National Association of Securities Dealers, Inc., 24878–24879
New York Stock Exchange, Inc., 24879–24885
Philadelphia Stock Exchange, Inc., 24885–24889

Small Business Administration
NOTICES
Small business size standards:
Nonmanufacturer rule; waivers—
Industrial gases manufacturing, etc., 24889–24890

Social Security Administration
RULES
Social security benefits:
Federal old age, survivors, and disability insurance—
Widow's and widower's benefits; applications filing and requirements, 24812–24814

State Department
NOTICES
Agency information collection activities; proposals, submissions, and approvals, 24890
Foreign terrorists and terrorist organizations; designation:
Lashkar-e-Tayyiba (LT, LET) et al., 24890
Grants and cooperative agreements; availability, etc.:
Indian and Pakistani Teachers Professional Development Program, 24891–24895
U.S-French Teachers-in-Training Program, 24895–24901

Transportation Department
See Federal Aviation Administration
See Federal Highway Administration
See Federal Motor Carrier Safety Administration
See Research and Innovative Technology Administration
NOTICES
Aviation proceedings:
Agreements filed; weekly receipts, 24901–24902
Certificates of public convenience and necessity and foreign air carrier permits; weekly applications, 24902

Treasury Department
NOTICES
Agency information collection activities; proposals, submissions, and approvals, 24914–24915

Separate Parts In This Issue

Part II
Commerce Department, Industry and Security Bureau, 24918–24970

Part III
Energy Department, Energy Efficiency and Renewable Energy Office, 24972–25008

Part IV
Agriculture Department, Animal and Plant Health Inspection Service, 25010–25057

Reader Aids
Consult the Reader Aids section at the end of this issue for phone numbers, online resources, finding aids, reminders, and notice of recently enacted public laws.

To subscribe to the Federal Register Table of Contents LISTSERV electronic mailing list, go to http://listserv.access.gpo.gov and select Online mailing list archives, FEDREGTOC-L, Join or leave the list (or change settings); then follow the instructions.

CFR PARTS AFFECTED IN THIS ISSUE

A cumulative list of the parts affected this month can be found in the Reader Aids section at the end of this issue.

7 CFR

Proposed Rules:

205 24820
305 25010
319 25010
352 25010

9 CFR

77 24803
93 24806

10 CFR

431 24972

14 CFR

25 24808
39 24808
71 24812

15 CFR

710 24918
711 24918
712 24918
713 24918
714 24918
715 24918
716 24918
717 24918
718 24918
719 24918
720 24918
721 24918
722 24918

20 CFR

404 24812

21 CFR

558 24814

34 CFR

Proposed Rules:

76 24824

37 CFR

Proposed Rules:

201 24829

40 CFR

9 24817
86 24817
600 24817

Proposed Rules:

52 (2 documents) 24831, 24834

43 CFR

Proposed Rules:

2800 24836
2880 24836

50 CFR

17 24916

Proposed Rules:

17 24916

Rules and Regulations

Federal Register
Vol. 71, No. 81
Thursday, April 27, 2006

This section of the FEDERAL REGISTER contains regulatory documents having general applicability and legal effect, most of which are keyed to and codified in the Code of Federal Regulations, which is published under 50 titles pursuant to 44 U.S.C. 1510.

The Code of Federal Regulations is sold by the Superintendent of Documents. Prices of new books are listed in the first FEDERAL REGISTER issue of each week.

DEPARTMENT OF AGRICULTURE

Animal and Plant Health Inspection Service

9 CFR Part 77

[Docket No. 04–094–2]

Tuberculosis in Captive Cervids; Extend Interval for Conducting Reaccreditation Test

AGENCY: Animal and Plant Health Inspection Service, USDA.

ACTION: Final rule.

SUMMARY: We are amending the regulations regarding tuberculosis in captive cervids by extending, from 2 years to 3, the term for which accredited herd status is valid and increasing by 12 months the interval for conducting the reaccreditation test required to maintain the accredited tuberculosis-free status of cervid herds. We are also reducing, from three tests to two, the number of consecutive negative official tuberculosis tests required of all eligible captive cervids in a herd before a herd can be eligible for recognition as an accredited herd. These actions will reduce testing costs for herd owners, lessen the potential for animal injury or death during testing, and lower administrative costs for State and Federal regulatory agencies. In addition, we are amending the regulations by removing references to the blood tuberculosis test for captive cervids, as that test is no longer used in the tuberculosis eradication program for captive cervids. This change updates the regulations so that they refer only to those official tests currently in use.

DATES: *Effective Date:* April 21, 2006.

FOR FURTHER INFORMATION CONTACT: Dr. Michael Dutcher, Senior Staff Veterinarian, National Tuberculosis Eradication Program, Eradication and Surveillance Team, National Center for Animal Health Programs, VS, APHIS, 4700 River Road Unit 43, Riverdale, MD 20737–1231, (301) 734–5467.

SUPPLEMENTARY INFORMATION:

Background

Through the National Cooperative State/Federal Bovine Tuberculosis Eradication Program, the Animal and Plant Health Inspection Service (APHIS) works cooperatively with the Nation's livestock industry and State animal health agencies to eradicate bovine tuberculosis from domestic livestock in the United States and prevent its recurrence.

Federal regulations implementing this program are contained in 9 CFR part 77, ''Tuberculosis'' (referred to below as the regulations), and in the ''Uniform Methods and Rules—Bovine Tuberculosis Eradication'' (UMR), which is incorporated by reference into the regulations. The regulations restrict the interstate movement of cattle, bison, and captive cervids to prevent the spread of tuberculosis. Subpart C of the regulations (§§ 77.20 to 77.41) addresses captive cervids.

On January 12, 2006, we published in the **Federal Register** (71 FR 1985–1988, Docket No. 04–094–1) a proposal [1] to amend the regulations regarding tuberculosis in captive cervids by extending, from 2 years to 3, the term for which accredited herd status is valid and increasing by 12 months the interval for conducting the reaccreditation test required to maintain the accredited tuberculosis-free status of cervid herds. We also proposed to reduce, from three tests to two, the number of consecutive negative official tuberculosis tests required of all eligible captive cervids in a herd before a herd can be eligible for recognition as an accredited herd. We proposed these actions to reduce testing costs for herd owners, lessen the potential for animal injury or death during testing, and lower administrative costs for State and Federal regulatory agencies. In addition, we proposed to amend the regulations by removing references to the blood tuberculosis test for captive cervids, as that test is no longer used in the tuberculosis eradication program for captive cervids. We proposed this change to update the regulations so that they refer only to those official tests currently in use.

We solicited comments on our proposal for 60 days ending on March 13, 2006. We received 32 comments by that date, from producers, industry group representatives, private citizens, and one State agency. In all, 30 of the 32 commenters supported the rule, although three of these commenters had questions or suggestions regarding the proposed rule. The two remaining commenters were opposed to the proposed rule. The issues raised by the commenters are discussed below.

Two commenters opposed the change to the current testing requirements. One of these commenters was concerned that the proposed rule would not protect the health of Americans or the health of America's livestock industry. The commenter stated that by allowing cervid producers to obtain accredited tuberculosis-free status with fewer consecutive negative tests, as well as allowing these same herds to retain that status for longer periods without required re-testing, the U.S. food supply will be endangered. This commenter also stated that the U.S. Animal Health Association's (USAHA) Committee on Tuberculosis noted that ''there is continuing concern that the level of surveillance for TB in captive cervids may be inadequate.''

We do not believe the changes in this rule will reduce the effectiveness of our tuberculosis surveillance and eradication program, nor will they increase the risk of captive herds endangering the U.S. food supply. Further, the proposed rule was prepared in an effort to directly address the concerns of the USAHA Committee on Tuberculosis regarding surveillance for tuberculosis in captive cervids, and has been endorsed by that committee. By reducing testing costs for herd owners and lessening the potential for animal injury or death during testing, we are making the program more accessible to cervid producers. This will result in better surveillance for tuberculosis due to greater participation by cervid producers in the eradication program. Experience has shown that careful management in accredited herds of captive cervids in accordance with the regulations and the UMR virtually eliminates the already low probability of

[1] To view the proposed rule and the comments we received, go to *http://www.regulations.gov*, click on the ''Advanced Search'' tab, and select ''Docket Search.'' In the Docket ID field, enter APHIS–2004–0119, then click on ''Submit.'' Clicking on the Docket ID link in the search results page will produce a list of all documents in the docket.

introducing tuberculosis into a herd from outside sources. Because of this, it is also our belief that the greater producer participation and the resulting improved surveillance will address, in part, the concerns over the level of surveillance in cervids as reported in the aforementioned 2005 Report from the USAHA Committee on Tuberculosis. Additionally, continued participation by owners in this program will yield monitoring and surveillance data on cervids that is extremely important to our efforts to detect and eliminate tuberculosis-affected herds in the United States. With respect to the food safety issue raised by the commenter, the Centers for Disease Control and Prevention reports that, while rare, humans can become infected with *Mycobacterium bovis*, but that the most common cause of such infection is through the consumption of unpasteurized milk products from infected cows. The consumption of meat is not considered to present a risk of transmitting *M. bovis* to humans. We are not making any changes to the final rule as a result of this comment.

Two of the commenters who supported the rule suggested we add additional blood tests—one specifically suggested Cervigam and/or the Rapid Test—to the list of official tests for tuberculosis in cervids.

Because we recognize the need for more modern and practical tests for tuberculosis in captive cervids, we plan to conduct validation studies of both the Cervigam test and the Rapid Test. If the studies demonstrate that these two tests are acceptable, we will initiate the process of making the Cervigam and the Rapid Test official tests for tuberculosis in captive cervids. At this time, however, we are not making any changes to the regulations as a result of this comment.

Another commenter who supported the rule questioned whether or not he would have to retest his cervids for tuberculosis if he sold deer and needed to move them across State lines. This commenter also suggested that certification should be ''federally sponsored.''

Under the regulations as amended by this rule, animals moving interstate from an accredited tuberculosis-free herd would not require testing as long as the herd's most recent test was within the past 36 months. The regulations in part 77 and the specific requirements regarding the interstate movement of cervids from accredited herds are administered by APHIS and thus do provide the Federal ''sponsorship'' suggested by the commenter.

Another commenter who supported the rule stated that the tuberculosis testing costs and high and low ranges of animal values presented in the proposed rule's economic analysis were too low. The commenter stated that the average cost of tuberculosis testing is ''significantly higher'' than $10 to $15 a head, and that the high/low ranges of animal values were likewise too low.

We acknowledge that our estimates of testing costs, which we acknowledged were preliminary, and animal values, which were based on limited industry information, may be too low in some cases. Higher costs and values would, however, further emphasize the economic benefits of adopting this rule, insofar as the savings to producers would be even higher than estimated. We will continue to seek additional information that will allow us to more accurately estimate the costs of testing and the value of animals.

Therefore, for the reasons given in the proposed rule and in this document, we are adopting the proposed rule as a final rule, without change.

Effective Date

This is a substantive rule that relieves restrictions and, pursuant to the provisions of 5 U.S.C. 553, may be made effective less than 30 days after publication in the **Federal Register**.

This final rule extends the term for which accredited herd status is valid, increases the interval for conducting reaccreditation tests, and reduces the number of consecutive negative official tuberculosis tests required of all eligible captive cervids in a herd before a herd can be eligible for recognition as an accredited herd. Making this rule effective immediately will reduce testing costs for herd owners, lessen the potential for animal injury or death during testing, and lower administrative costs for State and Federal regulatory agencies. Therefore, the Administrator of the Animal and Plant Health Inspection Service has determined that this rule should be effective upon signature.

Executive Order 12866 and Regulatory Flexibility Act

This rule has been reviewed under Executive Order 12866. The rule has been determined to be not significant for the purposes of Executive Order 12866 and, therefore, has not been reviewed by the Office of Management and Budget.

We are amending the regulations regarding tuberculosis in captive cervids by extending, from 2 years to 3, the term for which accredited herd status is valid and increasing by 12 months the interval for conducting the reaccreditation test required to maintain the accredited tuberculosis-free status of cervid herds. We are also reducing, from three tests to two, the number of consecutive negative official tuberculosis tests required of all eligible captive cervids in a herd before a herd can be eligible for recognition as an accredited herd. These actions will reduce testing costs for herd owners, lessen the potential for animal injury or death during testing, and lower administrative costs for State and Federal regulatory agencies. In addition, we are amending the regulations by removing references to the blood tuberculosis test for captive cervids, as that test is no longer used in the tuberculosis eradication program for captive cervids. This change will update the regulations so that they refer only to those official tests currently in use.

Of primary importance among captive cervids are deer and elk, which are farmed for breeding stock, velvet antler, meat, and sales to game parks and exhibits. This is a relatively small industry, and as such was not tracked as a separate line item in census data before the 2002 Census of Agriculture. The 2002 Census estimates there are 286,863 deer being raised on 4,901 farms, and 97,901 elk on 2,371 farms in the United States. Due to the devastating effects of chronic wasting disease in captive cervids, these numbers are largely believed to be an overstatement of current market conditions. Unfortunately, the census data do not consider the per head value of deer or elk. However, limited data are collected by the two major cervid industry associations, the North American Elk Breeders Association (NAEBA) and the North American Deer Farmers Association (NADeFA). Membership in the above associations is estimated to constitute 60 percent of the farmed cervid industry. Attempts to get current information on deer and elk industries and corresponding values were unsuccessful. However, we previously gathered information from the above major industry associations in connection with another rulemaking related to deer and elk,[2] and have used that information as the source of the estimates in this analysis.

NAEBA estimates about 75 percent of its members have 100 or fewer animals, 15 percent have more than 100 but fewer than 500, and the remaining 10 percent have more than 500 elk. Numbers of elk per farm vary depending on the farm classification, commercial

[2] See Docket No. 00–108–2, published in the **Federal Register** on December 24, 2003 (68 FR 74513–74529).

or hobby. The value per elk also varies, depending on type of animal (*e.g.*, bull, calf) and market conditions, ranging from a high of $5,000 for superior animals to a low of $500 for non-pedigree animals. In 2002, NAEBA estimated the average value per head of elk was $2,000; using this figure, we can approximate the value of the 97,901 elk on U.S. farms to be $195.8 million. In 2001, gross receipts for members in NAEBA (velvet antler, breeding stock, and meat) totaled $44.3 million.

NADeFA estimates there are an average of 50 deer per farm. The actual number of deer per farm varies, depending on usage, from a high of 3,000 for commercial farms to a low of 5 for hobby farms. The value of each deer also varies depending on the type of animal (*e.g.*, wapiti, white-tail, fallow) and market conditions. NADeFA estimates the average value per animal to be $1,687, with wapiti deer at the high end at $4,000 each, and fallow deer at the low end at $375 each. Using this average per head value of $1,687, the value of the 286,863 deer on U.S. farms can be approximated at $483.9 million.

This final rule amends the regulations by extending the term for which accredited herd status is valid, increasing the interval for conducting reaccreditation tests, and reducing the number of consecutive negative official tuberculosis tests required of all eligible captive cervids in a herd before a herd can be eligible for recognition as an accredited herd. We expect these changes will encourage producers already participating in this voluntary program to maintain accredited herds, as they will reduce testing costs. Continued participation in this program is important to bovine tuberculosis eradication efforts, as accreditation testing yields monitoring and surveillance data on cervids which greatly assist in our efforts to detect and eliminate tuberculosis-affected herds in the United States.

The potential benefits of this final rule are fairly clear, the most obvious being decreased testing costs for those producers maintaining accredited herds. Furthermore, reducing testing requirements would lower administrative costs for State and Federal regulatory agencies. In addition, by extending the interval between reaccreditation tests and reducing the number of qualifying tests, the need to round up deer and elk for testing, and the potential for animal injury or death during that process, will be reduced.

Currently, APHIS records indicate there are 1,024 accredited herds of captive cervids in the United States. APHIS is currently in the process of researching the average cost to producers of identifying animals and testing them for tuberculosis. Our preliminary research indicates the average cost of tuberculosis testing ranges from $10 to $15 per head. Thus, in a 6-year period, the changes in the regulations will translate to a cost savings of $20 to $30 per head, as there will be only two tests required for reaccreditation and two tests required to qualify for initial accreditation instead of three in each case. If we were to assume each of the 1,024 accredited herds had an average of 50 animals, the longer interval between reaccreditation tests and the reduction in the number of qualifying tests will result in a total cost savings to the domestic industry of approximately $1,024,000 to $1,536,000 over a 6-year period.[3]

According to the two major cervid associations, the majority of their members would be classified as small entities by U.S. Small Business Administration standards.[4] For producers wishing to maintain accredited status, considering that the estimated average value per head is $2,000 and $1,687 for elk and deer, respectively, the cost savings of reduced testing represent less than 2 percent of the per head value. In general practice, we assume a regulation that has compliance costs which equal a small business' profit margin, or 5 to 10 percent of annual sales, pose an impact which can be considered ''significant.'' [5] For the purposes of illustration and analysis of potential effects on small entities, if we assume a cervid producer owns only a single average herd of 50 deer, with annual sales or value of approximately $84,350, compliance costs totaling between $4,218 and $8,435 would qualify as posing a ''significant'' economic impact on this entity. In this case, the average compliance costs of tuberculosis testing for an entire herd would be $750, using the high-end average cost per head of $15, which would not qualify as monetarily significant. Thus, for those producers participating in the voluntary cervid accreditation program, the cost savings from the elimination of two tests, while beneficial, would not represent a significant monetary savings.

Under these circumstances, the Administrator of the Animal and Plant Health Inspection Service has determined that this action will not have a significant economic impact on a substantial number of small entities.

Executive Order 12372

This program/activity is listed in the Catalog of Federal Domestic Assistance under No. 10.025 and is subject to Executive Order 12372, which requires intergovernmental consultation with State and local officials. (See 7 CFR part 3015, subpart V.)

Executive Order 12988

This final rule has been reviewed under Executive Order 12988, Civil Justice Reform. This rule: (1) Preempts all State and local laws and regulations that are in conflict with this rule; (2) has no retroactive effect; and (3) does not require administrative proceedings before parties may file suit in court challenging this rule.

Paperwork Reduction Act

This final rule contains no new information collection or recordkeeping requirements under the Paperwork Reduction Act of 1995 (44 U.S.C. 3501 *et seq.*).

List of Subjects in 9 CFR Part 77

Animal diseases, Bison, Cattle, Reporting and recordkeeping requirements, Transportation, Tuberculosis.

■ Accordingly, we are amending 9 CFR part 77 as follows:

PART 77—TUBERCULOSIS

■ 1. The authority citation for part 77 continues to read as follows:

Authority: 7 U.S.C. 8301–8317; 7 CFR 2.22, 2.80, and 371.4.

■ 2. Section 77.20 is amended as follows:

■ a. In the definition for *accredited herd*, by removing the word ''three'' and adding the word ''two'' in its place.

■ b. By removing the definition for *blood tuberculosis* (BTB) test.

■ c. In the definition for *negative*, by removing the words ''classified by the testing laboratory as ''avian'' or ''negative'' on the BTB test,''.

■ d. By revising the definition for *official tuberculosis test* to read as set forth below.

■ e. In the definition for *reactor*, by removing the words '', or is classified by

[3] Calculation: 1,024 herds × 50 animals per herd × $10 (or $15 for high-end estimate) × 2 tests.

[4] NAEBA estimates 75 percent of its members have 100 or fewer animals, which translates to an average value per elk farm of $200,000 (100 animals × $2,000). NADeFA estimates there are an average of 50 deer per farm, which translates into an average total value per deer farm of $84,350 (50 animals × $1,687). A small cervid operation is one having $750,000 or less in annual receipts. Table of Size Standards based on NAICS 2002. Washington, DC: U.S. Small Business Administration, 2004.

[5] Verkuil, Paul R. ''A Critical Guide to the Regulatory Flexibility Act,'' Duke Law Journal, Apr. 1982: 928.

the testing laboratory as ''*M. bovis* positive'' on the BTB test,''.

■ f. In the definition for *suspect*, by removing the words '', or that is classified by the testing laboratory as equivocal on the BTB test,''.

The revisions read as follows:

§ 77.20 Definitions.

* * * * *

Official tuberculosis test. Any of the following tests for bovine tuberculosis in captive cervids, applied and reported in accordance with this part:

(1) The single cervical tuberculin (SCT) test.

(2) The comparative cervical tuberculin test (CCT) test.

* * * * *

§ 77.33 [Amended]

■ 3. Section 77.33 is amended as follows:

■ a. In paragraph (a) introductory text, by removing the words ''in paragraphs (a)(1) and (a)(2)'' and adding the words ''in paragraph (a)(1)'' in their place.

■ b. By removing and reserving paragraphs (a)(2), (b)(2), (d)(2), and (e)(3).

§ 77.34 [Amended]

■ 4. Section 77.34 is amended as follows:

■ a. In paragraph (a)(1), by removing the words ''either the CCT test or the BTB test'' and adding the words ''the CCT test'' in their place.

■ b. By removing paragraph (c).

■ 5. Section 77.35 is amended as follows:

■ a. In paragraph (a)(1), by removing the word ''three'' in the first sentence and adding the word ''two'' in its place.

■ b. By revising paragraph (d) to read as set forth below.

§ 77.35 Interstate movement from accredited herds.

* * * * *

(d) *Maintenance of accredited herd status.* To maintain status as an accredited herd, the herd must test negative to an official tuberculosis test within 33–39 months from the anniversary date of the second consecutive test with no evidence of tuberculosis disclosed (that is, the test on which the herd was recognized as accredited or the accrediting test). Each time the herd is tested for reaccreditation, it must be tested 33–39 months from the anniversary date of the accrediting test, not from the last date of reaccreditation (for example, if a herd is accredited on January 1 of a given year, the anniversary date will be January 1 of every third year). Accredited herd status is valid for 36 months (1,095 days) from the anniversary date of the accrediting test. If the herd is tested between 36 and 39 months after the anniversary date, its accredited herd status will be suspended for the interim between the anniversary date and the reaccreditation test. During the suspension period, the herd will be considered ''unclassified'' and captive cervids may be moved interstate from the herd only in accordance with the movement requirements for the State or zone in which the herd is located.

§ 77.37 [Amended]

■ 6. In § 77.37, paragraph (a)(2), footnote 3 is redesignated as footnote 2.

■ 7. In § 77.39, paragraph (a) is amended as follows:

■ a. In paragraph (a)(1)(i) introductory text, by removing the words ''or the BTB test''.

■ b. By removing and reserving paragraph (a)(1)(i)(B).

■ c. In paragraph (a)(1)(ii) introductory text, by removing the words ''or the first BTB test''.

■ d. In paragraph (a)(1)(ii)(A), by removing the word ''; or'' and adding a period in its place.

■ e. By removing and reserving paragraph (a)(1)(ii)(B).

■ f. In paragraph (e) introductory text, by removing the fourth sentence after the paragraph heading and revising the last two sentences of the paragraph to read as set forth below.

§ 77.39 Other interstate movements.

* * * * *

(e) *Herds that have received captive cervids from an affected herd.* * * * Any exposed captive cervid that responds to the SCT test must be classified as a reactor and must be slaughter inspected or necropsied. Any exposed captive cervid that tests negative to the SCT test will be considered as part of the affected herd of origin for purposes of testing, quarantine, and the five annual whole herd tests required for affected herds in paragraph (d) of this section.

* * * * *

Done in Washington, DC, this 21st day of April 2006.

Kevin Shea,

Acting Administrator, Animal and Plant Health Inspection Service.

[FR Doc. 06–3984 Filed 4–26–06; 8:45 am]

BILLING CODE 3410–34–P

DEPARTMENT OF AGRICULTURE

Animal and Plant Health Inspection Service

9 CFR Part 93

[Docket No. APHIS–2006–0020]

States Approved To Receive Stallions and Mares From CEM-Affected Regions; Indiana

AGENCY: Animal and Plant Health Inspection Service, USDA.

ACTION: Direct final rule.

SUMMARY: We are amending the animal importation regulations by adding Indiana to the lists of States approved to receive certain stallions and mares imported into the United States from regions affected with contagious equine metritis (CEM). We are taking this action because Indiana has entered into an agreement with the Administrator of the Animal and Plant Health Inspection Service to enforce its State laws and regulations to control CEM and to require inspection, treatment, and testing of horses, as required by Federal regulations, to further ensure the horses' freedom from CEM. This action relieves unnecessary restrictions on the importation of mares and stallions from regions where CEM exists.

DATES: This rule will be effective on June 26, 2006, unless we receive written adverse comments or written notice of intent to submit adverse comments on or before May 30, 2006. If we receive written adverse comments or written notice of intent to submit adverse comments, we will publish a document in the **Federal Register** withdrawing this rule before the effective date.

ADDRESSES: You may submit comments by either of the following methods:

- Federal eRulemaking Portal: Go to *http://www.regulations.gov* and, in the lower ''Search Regulations and Federal Actions'' box, select ''Animal and Plant Health Inspection Service'' from the agency drop-down menu, then click on ''Submit.'' In the Docket ID column, select APHIS–2006–0020 to submit or view public comments and to view supporting and related materials available electronically. Information on using Regulations.gov, including instructions for accessing documents, submitting comments, and viewing the docket after the close of the comment period, is available through the site's ''User Tips'' link.
- Postal Mail/Commercial Delivery: Please send four copies of your comment (an original and three copies) to Docket No. APHIS–2006–0020,

Regulatory Analysis and Development, PPD, APHIS, Station 3A–03.8, 4700 River Road Unit 118, Riverdale, MD 20737–1238. Please state that your comment refers to Docket No. APHIS–2006–0020.

Reading Room: You may read any comments that we receive on this docket in our reading room. The reading room is located in room 1141 of the USDA South Building, 14th Street and Independence Avenue, SW., Washington, DC. Normal reading room hours are 8 a.m. to 4:30 p.m., Monday through Friday, except holidays. To be sure someone is there to help you, please call (202) 690–2817 before coming.

Other Information: Additional information about APHIS and its programs is available on the Internet at *http://www.aphis.usda.gov.*

FOR FURTHER INFORMATION CONTACT: Dr. Freeda E. Isaac, Senior Staff Veterinarian, National Center for Import and Export, VS, APHIS, 4700 River Road Unit 39, Riverdale, MD 20737–1231; (301) 734–8364.

SUPPLEMENTARY INFORMATION:

Background

The animal importation regulations in 9 CFR part 93 (referred to below as the regulations), among other things, prohibit or restrict the importation of certain animals, including horses, into the United States to protect U.S. livestock from communicable diseases.

In § 93.301, paragraph (c)(1) prohibits the importation of horses into the United States from certain regions where contagious equine metritis (CEM) exists. Paragraph (c)(2) lists categories of horses that are excepted from this prohibition, including, in § 93.301(c)(2)(vi), horses over 731 days of age imported for permanent entry if the horses meet the requirements of § 93.301(e).

One of the requirements in § 93.301(e) is that mares and stallions over 731 days old imported for permanent entry from regions where CEM exists must be consigned to States listed in § 93.301(h)(6), for stallions, or in § 93.301(h)(7), for mares. The Administrator of the Animal and Plant Health Inspection Service (APHIS) has approved these States to receive stallions or mares over 731 days of age from regions where CEM exists because each State has entered into a written agreement with the Administrator to enforce State laws and regulations to control CEM, and each State has agreed to quarantine, test, and treat stallions and mares over 731 days of age from any region where CEM exists in accordance with § 93.301(e).

Indiana has entered into a written agreement with the Administrator of APHIS and has agreed to comply with all of the requirements in § 93.301(e) for importing stallions and mares over 731 days old from regions where CEM exists. Therefore, this direct final rule will add Indiana to the lists of States in § 93.301(h)(6) and (h)(7) approved to receive certain stallions and mares imported into the United States from regions where CEM exists.

Dates

We are publishing this rule without a prior proposal because we view this action as noncontroversial and anticipate no adverse public comments. This rule will be effective, as published in this document, on June 26, 2006, unless we receive written adverse comments or written notice of intent to submit adverse comments by May 30, 2006.

Adverse comments are comments that suggest the rule should not be adopted or that suggest the rule should be changed.

If we receive written adverse comments or written notice of intent to submit adverse comments, we will publish a document in the **Federal Register** withdrawing this rule before the effective date. We will then publish a proposed rule for public comment.

As discussed above, if we receive no written adverse comments or written notice of intent to submit adverse comments within 30 days of publication of this direct final rule, this direct final rule will become effective 60 days following its publication. We will publish a document in the **Federal Register** before the effective date of this direct final rule, confirming that it is effective on the date indicated in this document.

Executive Order 12866 and Regulatory Flexibility Act

This rule has been reviewed under Executive Order 12866. For this action, the Office of Management and Budget has waived its review under Executive Order 12866.

We are amending the animal importation regulations by adding Indiana to the lists of States approved to receive certain stallions and mares imported into the United States from regions affected with CEM. We are taking this action because Indiana has entered into an agreement with the Administrator of APHIS to enforce its State laws and regulations to control CEM and to require inspection, treatment, and testing of horses, as required by Federal regulations, to further ensure the horses' freedom from CEM. This action relieves unnecessary restrictions on the importation of mares and stallions from regions where CEM exists.

The United States imported a total of 41,065 horses in 2004. Nearly 82 percent of horses imported were from Canada (76 percent) and Mexico (6 percent). Of the total imports, 35,372 were from non-CEM countries and the remaining 5,693 were from CEM countries. The proportion of pure-bred horses was much smaller than other horses. Of the above total, 2,297 were purebred breeding horses. Only 265 purebred breeding horses were imported from CEM-affected countries. However, horses supplied by CEM-affected countries are generally highly valued. In 2004, for example, the average value of a purebred breeding horse imported from a CEM-affected region was $42,600, whereas the average value of a purebred breeding horse imported from non-CEM countries was $4,720.

The rule will allow Indiana horse operations to import stallions and mares directly from CEM-affected regions, whereas at present they must be imported and undergo post-entry testing and treatment in another, currently approved State. There are now 21 States approved to receive stallions and mares from CEM-affected regions. Thus, Indiana would join those 21 States as a potential destination for purebred breeding horses imported from CEM-affected regions. This rule would affect operations raising horses and other equines (North American Industry Classification System (NAICS) code 112920) and operations owning racehorses (NAICS code 711219). The main effect would be on those entities importing horses from CEM-affected regions. It is not known how many such firms there may be, but it is reasonable to assume that at least some of them may be small entities. The Small Business Administration classifies operations engaged in raising horses and other equines as small entities if their annual receipts are not more than $750,000. Operations owning race horses are considered small if annual gross receipts are less than $6.5 million. According to the 2002 Census of Agriculture, there were 14,500 horse farms in Indiana that year, 3,492 of which sold 12,397 horses that had a total value of $34 million. About 5 percent are owners of racehorses. These data imply an average income per farm from horse sales of about $2,750. Over 99 percent of operations raising horses and owning racehorses are considered to be small. Entities that may be affected by the rule are principally small

businesses, but the impact will not be significant.

This rule is expected to benefit small and large horse entities in Indiana through trade opportunities already provided to States currently approved to receive horses from CEM-affected regions. Horses from CEM-affected regions will be allowed to be moved directly into Indiana, thereby benefitting Indiana importers through lower transport costs and reduced paperwork burdens. Mainly, breeding horse importers in Indiana would benefit from this rule. Because the pool of imported horses is a very small fraction of the domestic total and Indiana importers are expected to compete with importers in 21 other States, any net beneficial impact would be very small, especially when compared to the value of the imported horses.

Under these circumstances, the Administrator of the Animal and Plant Health Inspection Service has determined that this action will not have a significant economic impact on a substantial number of small entities.

Executive Order 12988

This rule has been reviewed under Executive Order 12988, Civil Justice Reform. This rule: (1) Preempts all State and local laws and regulations that are inconsistent with this rule; (2) has no retroactive effect; and (3) does not require administrative proceedings before parties may file suit in court challenging this rule.

Paperwork Reduction Act

This rule contains no new information collection or recordkeeping requirements under the Paperwork Reduction Act of 1995 (44 U.S.C. 3501 *et seq.*).

List of Subjects in 9 CFR Part 93

Animal diseases, Imports, Livestock, Poultry and poultry products, Quarantine, Reporting and recordkeeping requirements.

■ Accordingly, 9 CFR part 93 is amended as follows:

PART 93—IMPORTATION OF CERTAIN ANIMALS, BIRDS, AND POULTRY, AND CERTAIN ANIMAL, BIRD, AND POULTRY PRODUCTS; REQUIREMENTS FOR MEANS OF CONVEYANCE AND SHIPPING CONTAINERS

■ 1. The authority citation for part 93 continues to read as follows:

Authority: 7 U.S.C. 1622 and 8301–8317; 21 U.S.C. 136 and 136a; 31 U.S.C. 9701; 7 CFR 2.22, 2.80, and 371.4.

§ 93.301 [Amended]

■ 2. Section 93.301 is amended as follows:

■ a. In paragraph (h)(6), by adding, in alphabetical order, ''The State of Indiana''.

■ b. In paragraph (h)(7), by adding, in alphabetical order, ''The State of Indiana''.

Done in Washington, DC, this 21st day of April 2006.

Kevin Shea,

Acting Administrator, Animal and Plant Health Inspection Service.

[FR Doc. 06–3985 Filed 4–26–06; 8:45 am]

BILLING CODE 3410–34–P

DEPARTMENT OF TRANSPORTATION

Federal Aviation Administration

14 CFR Part 25

[Docket No. NM316, Special Conditions No. 25–315–SC]

Special Conditions: Airbus Model A380–800 Airplane; Discrete Gust Requirements

AGENCY: Federal Aviation Administration, DOT.

ACTION: Final special conditions; correction.

SUMMARY: This document corrects an error that appeared in Docket No. NM316, Special Conditions No. 25–312–SC, which were published in the **Federal Register** on January 24, 2006 (71 FR 3753). The error is in the Special Conditions No. and is being corrected herein.

DATES: *Effective Date:* The effective date of this correction is April 6, 2006.

FOR FURTHER INFORMATION CONTACT: Madeleine Kolb, FAA, Standardization Branch, ANM–113, Transport Airplane Directorate, Aircraft Certifications Service, 1601 Lind Avenue, SW., Renton, WA 98055–4056; telephone (425) 227–2799; facsimile (425) 227–1149.

SUPPLEMENTARY INFORMATION: The document designated as ''Docket No. NM316, Special Conditions No. 25–312–SC'' was published in the **Federal Register** on January 24, 2006 (71 FR 3753). The document issued special conditions pertaining to discrete gust requirements for the Airbus Model A380–800 airplane.

As published, the document contained an error in that the Special Conditions No. was shown as 25–312–SC, which is the number of a different set of special conditions. To avoid confusion, a new Special Condition No., 25–315–SC, has been assigned to ''Special Conditions: Airbus Model A380–800 Airplane, Discrete Gust Requirements.''

Since no other part of the regulatory information has been changed, the Special Conditions are not being republished.

Correction

In Final Special Conditions document [FR Doc. 06–598, Filed 1–23–06; 8:45] and published on January 24, 2006 (71 FR 3753), make the following correction:

1. On page 3753, in the first column in the Headings section, correct ''Special Conditions No. 25–312–SC'' to read ''Special Conditions No. 25–315–SC.''

Issued in Renton, Washington, on April 6, 2006.

Kevin Mullin,

Acting Manager, Transport Airplane Directorate, Aircraft Certification Service.

[FR Doc. 06–3947 Filed 4–26–06; 8:45 am]

BILLING CODE 4910–13–M

DEPARTMENT OF TRANSPORTATION

Federal Aviation Administration

14 CFR Part 39

[Docket No. FAA–2006–24518; Directorate Identifier 2006–SW–10–AD; Amendment 39–14569; AD 2006–08–12]

RIN 2120–AA64

Airworthiness Directives; MD Helicopters, Inc. Model 600N Helicopters

AGENCY: Federal Aviation Administration, DOT.

ACTION: Final rule; request for comments.

SUMMARY: This amendment supersedes an existing airworthiness directive (AD) for the MD Helicopters, Inc. (MDHI) Model 600N helicopters, that currently requires inspecting both upper tailboom attachment fittings, nut plates and both angles for a crack or thread damage, and repairing or replacing any cracked or damaged part. That AD also requires replacing the upper right tailboom attachment bolt with a new attachment bolt, and if the upper right attachment bolt is broken, replacing the three remaining attachment bolts with airworthy bolts. Adding a washer to each bolt and modifying both access covers is also required. Thereafter, inspecting the upper tailboom attachments and repairing or replacing

any cracked part is required by that AD. That AD was prompted by the discovery of a cracked attachment bolt on a helicopter. This AD requires those same actions, plus installing additional inspection holes in the aft fuselage skin panels and inspecting the upper and lower tailboom attachment fittings, the upper longerons, and the angles and nut plates for cracks. It also requires, within a specified time, replacing the upper right tailboom attachment fitting, painting the inspection area, and replacing existing nut plates. Additionally, it requires inspecting the attachment bolts for any damage or wear. This amendment is prompted by an accident involving a Model 600N helicopter. The actions specified by this AD are intended to prevent failure of the tailboom attachment fittings, separation of the tailboom from the helicopter, and subsequent loss of control of the helicopter.

DATES: Effective April 27, 2006.

The incorporation by reference of MD Helicopters Service Bulletin SB600N–039, dated December 9, 2003; MD Helicopters Service Bulletin SB600N–043, dated April 13, 2006; and MD Helicopters Technical Bulletin TB600N–007, Revision 1, dated April 13, 2006, as listed in the regulations, is approved by the Director of the Federal Register as of April 27, 2006.

The incorporation by reference of MD Helicopters Service Bulletin SB600N–036, dated November 2, 2001, as listed in the regulations, was approved previously by the Director of the Federal Register as of April 29, 2002 (67 FR 17934, April 12, 2002).

Comments for inclusion in the Rules Docket must be received on or before June 26, 2006.

ADDRESSES: Use one of the following addresses to submit comments on this AD:

- DOT Docket Web site: Go to *http://dms.dot.gov* and follow the instructions for sending your comments electronically;
- Government-wide rulemaking Web site: Go to *http://www.regulations.gov* and follow the instructions for sending your comments electronically;
- Mail: Docket Management Facility; U.S. Department of Transportation, 400 Seventh Street, SW., Nassif Building, Room PL–401, Washington, DC 20590;
- Fax: (202) 493–2251; or
- Hand Delivery: Room PL–401 on the plaza level of the Nassif Building, 400 Seventh Street, SW., Washington, DC, between 9 a.m. and 5 p.m., Monday through Friday, except Federal holidays.

You may get the service information identified in this AD from MD Helicopters Inc., Attn: Customer Support Division, 4555 E. McDowell Rd., Mail Stop M615, Mesa, Arizona 85215–9734, telephone 1–800–388–3378, fax 480–346–6813, or on the Web at *http://www.mdhelicopters.com.*

Examining the Docket

You may examine the docket that contains the AD, any comments, and other information on the Internet at *http://dms.dot.gov*, or in person at the Docket Management System (DMS) Docket Offices between 9 a.m. and 5 p.m., Monday through Friday, except Federal holidays. The Docket Office (telephone (800) 647–5227) is located on the plaza level of the Department of Transportation Nassif Building at the street address stated in the **ADDRESSES** section. Comments will be available in the AD docket shortly after the DMS receives them.

FOR FURTHER INFORMATION CONTACT: Jon Mowery, Aviation Safety Engineer, FAA, Los Angeles Aircraft Certification Office, Airframe Branch, 3960 Paramount Blvd., Lakewood, California 90712, telephone (562) 627–5322, fax (562) 627–5210.

SUPPLEMENTARY INFORMATION: On April 12, 2002, the FAA published AD 2001–24–51, Amendment 39–12706 (67 FR 17934), applicable to MDHI Model 600N helicopters, that had been issued on November 28, 2001, to all known operators. That AD requires, within 5 hours time-in-service (TIS), inspecting both upper tailboom attachment fittings, nut plates, and both angles for a crack or thread damage, and repairing or replacing any cracked or damaged part before further flight. That AD also requires replacing the upper right tailboom attachment bolt with a new bolt, and if the upper right tailboom attachment bolt is broken, replacing the three remaining attachment bolts with airworthy attachment bolts before further flight. Adding a washer to each bolt and modifying both access covers was also required. Thereafter, inspecting the upper tailboom attachments at intervals not to exceed 25 hours TIS and repairing or replacing any cracked part is required by that AD. That AD was prompted by the discovery of a cracked attachment bolt on a helicopter. That condition, if not corrected, could result in failure of a tailboom attachment, loss of the tailboom, and subsequent loss of control of the helicopter.

Since issuing that AD, on March 21, 2006, an accident occurred in Alberta, Canada, involving an MDHI Model 600N helicopter, resulting in one fatality. That accident may have been caused by failure of the thread engagement between the nut plate and bolt, and/or by cracking in the attachment bathtub fitting. This condition, if not corrected, could result in failure of the tailboom attachment fittings, separation of the tailboom from the helicopter, and subsequent loss of control of the helicopter.

On February 2, 2005, we issued a notice of proposed rulemaking (NPRM), applicable to MDHI Model 600N helicopters, to supersede AD 2001–24–51. That NPRM, Docket No. 2004–SW–16–AD (70 FR 7065, February 10, 2005), proposed to require the same actions required by AD 2001–24–51, and also proposed to require, before further flight, installing six additional inspection holes in the aft fuselage skin panels. The NPRM also proposed to require, within 100 hours TIS, inspecting the lower tailboom attachment fittings, inspecting the upper longerons at intervals not to exceed 1,200 flight hours, and additionally proposed a terminating action of modifying the fuselage aft section to strengthen the tailboom attachments and longerons. We anticipate withdrawing that NPRM. We also anticipate issuing a subsequent AD to require, within 24 months TIS, modifying the aft fuselage to strengthen the tailboom attachments and the longerons.

We have reviewed the following MDHI service information:

- MD Helicopters Service Bulletin SB600N–036, dated November 2, 2001, which describes procedures for inspecting the tailboom attachment fittings, repairing damaged fittings, and installing inspection holes in the upper right and upper left access covers;
- MD Helicopters Service Bulletin SB600N–039, dated December 9, 2003, which describes procedures for installing additional inspection holes in the fuselage, and also describes procedures for recurring inspections of the tailboom attachment fittings and of the upper longerons for cracks; and
- MD Helicopters Service Bulletin SB600N–043, dated April 13, 2006, which describes procedures for inspecting the tailboom attachment fittings and attachment bolts, and replacing the nut plates, attachment fittings, and attachment bolts, if necessary.
- MD Helicopters Technical Bulletin TB600N–007, Revision 1, dated April 13, 2006, which describes procedures for modifying the fuselage aft section to strengthen tailboom attachment fittings and upper longerons.

Since an unsafe condition has been identified that is likely to exist or develop on other MDHI Model 600N

helicopters of the same type design, this AD supersedes AD 2001–24–51 to require, within 5 hours TIS, installing six inspection holes in the aft fuselage skin panels. Then, using a borescope, inspect all four tailboom attachment fittings and the surrounding areas, the upper longerons, the upper nut plates and the upper angles for cracks. Add a washer to each bolt between the tailboom and the NAS1587 countersunk washer. If a crack is found on a right-hand angle, before further flight, install a new clip. If a crack is found on the left-hand angle, before further flight, replace the angle with an airworthy angle, or repair the angle in accordance with FAA-approved procedures. Finally, replacing the upper RH tailboom attachment bolt with a new bolt, and if the upper right attachment bolt is broken, replacing the three remaining attachment bolts with airworthy attachment bolts before further flight is required. Within 25 hours TIS, the following actions are also required:

- Inspecting all attachment fittings and surrounding areas;
- Replacing the upper right tailboom attachment fitting with an airworthy fitting;
- Painting the inspection area;
- Inspecting the attachment bolts for wear or damage;
- Replacing worn or damaged attachment bolts; and
- Replacing all existing nut plates with airworthy nut plates. Thereafter, inspect the upper tailboom attachment fittings, angles, and nut plates at intervals not to exceed 25 hours TIS, and inspect the lower tailboom attachment fittings, angles and nut plates at intervals not to exceed 100 hours TIS. Modifying the aft fuselage to strengthen the tailboom attachments and the longerons constitutes a terminating action for the requirements of this AD. Accomplish the actions by following the specified portions of the service and technical bulletins described previously.

The short compliance time involved is required because the previously described critical unsafe condition can adversely affect the controllability and structural integrity of the helicopter. A portion of the helicopters operated in this fleet have high utilization rates. Drilling inspection holes and inspecting the tailboom attachment fittings and surrounding areas for cracks are required within 5 hours TIS, therefore this AD must be issued immediately.

Since a situation exists that requires the immediate adoption of this regulation, it is found that notice and opportunity for prior public comment hereon are impracticable, and that good cause exists for making this amendment effective in less than 30 days.

The FAA estimates that this AD will affect 18 helicopters, and:

- Initial inspections will take approximately 2 work hours;
- Repetitive inspections will take approximately 24 work hours; and
- The initial modification will take approximately 25 work hours for a total of 51 work hours per helicopter to accomplish at an average labor rate of $80 per work hour. Required parts will cost approximately $2,050 for each tailboom attachment fitting (1 per helicopter) and $26 for 4 nut plates and 4 rivet collars per helicopter. Based on these figures, which assume a rate of utilization of 600 hours TIS per year, resulting in 24 repetitive inspections per year, we estimate the total cost impact of the AD on U.S. operators to be approximately $6,156 per helicopter, or $110,808, for the fleet, to perform the inspections and replacements.

Comments Invited

This AD is a final rule that involves requirements that affect flight safety and was not preceded by notice and an opportunity for public comment; however, we invite you to submit any written data, views, or arguments regarding this AD. Send your comments to an address listed under **ADDRESSES.** Include ''Docket No. FAA–2006–24518; Directorate Identifier 2006–SW–10–AD'' at the beginning of your comments. We specifically invite comments on the overall regulatory, economic, environmental, and energy aspects of the AD. We will consider all comments received by the closing date and may amend the AD in light of those comments.

We will post all comments we receive, without change, to *http://dms.dot.gov*, including any personal information you provide. We will also post a report summarizing each substantive verbal contact with FAA personnel concerning this AD. Using the search function of our docket Web site, you can find and read the comments to any of our dockets, including the name of the individual who sent the comment. You may review the DOT's complete Privacy Act Statement in the **Federal Register** published on April 11, 2000 (65 FR 19477–78), or you may visit *http://dms.dot.gov.*

Regulatory Findings

We have determined that this AD will not have federalism implications under Executive Order 13132. This AD will not have a substantial direct effect on the States, on the relationship between the National Government and the States, or on the distribution of power and responsibilities among the various levels of government.

For the reasons discussed above, I certify that the regulation:

1. Is not a ''significant regulatory action'' under Executive Order 12866;
2. Is not a ''significant rule'' under the DOT Regulatory Policies and Procedures (44 FR 11034, February 26, 1979); and
3. Will not have a significant economic impact, positive or negative, on a substantial number of small entities under the criteria of the Regulatory Flexibility Act.

We prepared an economic evaluation of the estimated costs to comply with this AD. See the DMS to examine the economic evaluation.

Authority for This Rulemaking

Title 49 of the United States Code specifies the FAA's authority to issue rules on aviation safety. Subtitle I, section 106, describes the authority of the FAA Administrator. Subtitle VII, Aviation Programs, describes in more detail the scope of the Agency's authority.

We are issuing this rulemaking under the authority described in subtitle VII, part A, subpart III, section 44701, ''General requirements.'' Under that section, Congress charges the FAA with promoting safe flight of civil aircraft in air commerce by prescribing regulations for practices, methods, and procedures the Administrator finds necessary for safety in air commerce. This regulation is within the scope of that authority because it addresses an unsafe condition that is likely to exist or develop on products identified in this rulemaking action.

List of Subjects in 14 CFR Part 39

Air transportation, Aircraft, Aviation safety, Incorporation by reference, Safety.

Adoption of the Amendment

■ Accordingly, pursuant to the authority delegated to me by the Administrator, the Federal Aviation Administration amends part 39 of the Federal Aviation Regulations (14 CFR part 39) as follows:

PART 39—AIRWORTHINESS DIRECTIVES

■ 1. The authority citation for part 39 continues to read as follows:

Authority: 49 U.S.C. 106(g), 40113, 44701.

§ 39.13 [Amended]

■ 2. Section 39.13 is amended by removing Amendment 39–12706 (71 FR 17934, April 12, 2002), and by adding

a new airworthiness directive (AD), Amendment 39–14569, to read as follows:

2006–08–12 MD Helicopters, Inc: Amendment 39–14569. Docket No. FAA–2006–24518; Directorate Identifier 2006–SW–10–AD. Supersedes AD 2001–24–51, Amendment 39–12706, Docket No. 2001–SW–57–AD.

Applicability

Model 600N helicopters, serial numbers with a prefix ''RN'' and 003 through 058, that have not been modified in the fuselage aft section to strengthen the tailboom attachments and longerons in accordance with MD Helicopters Technical Bulletin TB600N–007, dated January 12, 2004, or TB600N–007, Revision 1, dated April 13, 2006, certificated in any category.

Compliance

Required as indicated.

To prevent failure of the tailboom attachment fittings, separation of the tailboom from the helicopter, and subsequent loss of control of the helicopter, accomplish the following:

Note 1: There is a slight discrepancy between MD Helicopters, Inc. Service Bulletin SB600N–036, dated November 2, 2001 (SB600N–036) and MD Helicopters Service Bulletin SB600N–039, dated December 9, 2003 (SB600N–039) on the vertical location of the upper left inspection hole. Either location is acceptable for this AD.

(a) Within 5 hours time-in-service (TIS), unless accomplished previously:

(1) Remove the tailboom fairing and tailboom. Remove both upper tailboom attachment access covers in accordance with the Accomplishment Instructions, paragraph 2.B.(2) of SB600N–036.

Note 2: MDHI CSP–HMI–2, Section 53–40–30, pertains to the subject of this AD.

(2) Using a light and a 10x or higher magnifying glass:

(i) Inspect the right and left upper tailboom attachment fittings, part number (P/N) 500N3422 and 500N3422–3, respectively, for a crack as shown in Figure 1 of the SB600N–036. If a crack is found, replace any cracked attachment fitting with an airworthy attachment fitting before further flight.

(ii) Inspect both upper tailboom attachment nut plates for thread damage or a crack. Replace any damaged or cracked nut plate with an airworthy nut plate before further flight.

(iii) Inspect both angles for a crack. If a crack is found on a right-hand angle, P/N 500N3429–6, before further flight, install a new clip in accordance with the Accomplishment Instructions, paragraph 2.B.(5)(c) of the SB600N–036. If a crack is found on the left-hand angle, P/N 500N3429–7, before further flight, replace the angle with an airworthy angle, or repair the angle in accordance with FAA-approved procedures.

(3) Replace the upper right (pilot side) tailboom attachment bolt (bolt) with a new bolt.

(4) If the removed upper right pilot-side bolt is broken, replace the remaining three bolts with airworthy bolts before further flight.

(5) Add one washer, P/N AN960C516 (NAS1149C0563R) or AN960C616 (NAS1149C0663R), as appropriate, to each tailboom bolt between the tailboom and the NAS1587 countersunk washer. A minimum of two threads must extend past the nut plate.

(6) Modify both access covers in accordance with the Accomplishment Instructions, paragraph 2.B.(6), of the SB600N–036.

(b) Within 5 hours TIS, unless accomplished previously:

(1) Drill four additional inspection holes in the fuselage as shown for the left side of the fuselage in Figure 1 of SB600N–039, by following the Accomplishment Instruction paragraphs of SB600N–039 as follows:

(i) Paragraphs 2.A.(1)(a), (b), and (d) for inspection holes at L166 and R166.

(ii) Paragraphs 2.A.(2)(a), (b), and (d) for inspection holes at L153 and R153.

(2) Thoroughly clean the attachment fittings and surrounding area. If the attachment fittings and surrounding area cannot be satisfactorily cleaned to accomplish a borescope inspection, then accomplish the actions in paragraph (c) of this AD.

(3) Using a lighted borescope, inspect all four attachment fittings and the surrounding area for cracking.

(i) If a crack is found in the upper right attachment fitting, accomplish the actions in paragraph (c) of this AD.

(ii) If a crack is found in any of the other three attachment fittings, before further flight, accomplish the actions described in paragraph (f) of this AD.

(4) Visually inspect the upper longerons for cracking in accordance with the Accomplishment Instructions, paragraph 2.C., of SB600N–039. If a crack is found in the upper longeron, accomplish the actions in paragraph (e) of this AD.

Note 3: The reference in Figure 1 of SB600N–039 to the inspection hole at L167 mistakenly states that it was ''Added by SB900–036.'' Inspection holes at L167 and R167 were originally specified by SB600N–036.

(c) Within 25 hours TIS, unless accomplished previously:

(1) Thoroughly clean all attachment fittings and the surrounding areas, inspect the area for cracking, replace the upper right attachment fitting and all four nut plates, and paint the area inside of the attachment fittings in accordance with the Accomplishment Instructions, paragraph 2.B., of MD Helicopters Service Bulletin SB600N–043, dated April 13, 2006 (SB600N–043). If a crack is found in any of the other three attachment fittings, before further flight, accomplish the actions described in paragraph (f) of this AD.

(2) Using a 10x magnifying glass, inspect the attachment bolts' threads and shanks for wear or damage in accordance with paragraph 2.B., of SB600N–043. If wear or damage is present, replace the attachment bolts with airworthy bolts.

(d) Thereafter, at the specified intervals, remove the plug buttons from the inspection holes, and using a bright light, inspect the upper and lower left and upper and lower right attachment fittings, angles, and nut plates for a crack by following the Accomplishment Instruction paragraphs of SB600N–039, as follows, except you are not required to contact MDHI to meet the requirements of this AD.

(1) At intervals not to exceed 25 hours TIS, through inspection holes at L167 and R167, inspect the upper left and upper right attachment fittings, angles, and nut plates by following the Accomplishment Instructions, paragraphs 2.B.(2) through 2.B.(4), of SB600N–039.

(2) At intervals not to exceed 100 hours TIS, through inspection holes at L166 and R166, inspect the lower left and lower right attachment fittings, angles, and nut plates by following the Accomplishment Instructions, paragraphs 2.B.(2) through 2.B.(4), of SB600N–039.

(e) If a crack is found in the upper right attachment fitting, or in any angle, nut plate, longeron, or if thread wear or damage is found on any nut plate or bolt, before further flight, replace the cracked or worn or damaged part with an appropriate airworthy part, or accomplish the actions in paragraph (f) of this AD. If cracking is found in any of the other three attachment fittings, before further flight, accomplish the actions described in paragraph (f) of this AD.

(f) If required by paragraph (c)(1) of this AD, or if you choose to make this modification to comply with paragraph (e) of this AD, modify the aft fuselage to strengthen the tailboom attachments and the longerons by following the Accomplishment Instructions of MD Helicopters Technical Bulletin TB600N–007, Revision 1, dated April 13, 2006. Modifying the aft fuselage in accordance with this paragraph constitutes a terminating action for the requirements of this AD.

(g) To request a different method of compliance or a different compliance time for this AD, follow the procedures in 14 CFR 39.19. Contact the Manager, Los Angeles Aircraft Certification Office, Airframe Branch, FAA, ATTN: Jon Mowery, Aviation Safety Engineer, 3960 Paramount Blvd., Lakewood, California 90712, telephone (562) 627–5322, fax (562) 627–5210, for information about previously approved alternative methods of compliance.

(h) Special flight permits may be issued in accordance with 14 CFR 21.197 and 21.199 to operate the helicopter to the nearest maintenance facility capable of performing the inspections and modification.

(i) The inspections shall be done in accordance with MD Helicopters Service Bulletin SB600N–036, dated November 2, 2001. The incorporation by reference of that document was approved previously by the Director of the Federal Register, in accordance with 5 U.S.C. 552(a) and 1 CFR part 51, as of April 29, 2002 (67 FR 17934, April 12, 2002). The inspections, replacements and modifications shall be done in accordance with MD Helicopters Service Bulletin SB600N–039, dated December 9, 2003; MD Helicopters Service Bulletin SB600N–043, dated April 13, 2006; and MD Helicopters Technical Bulletin

TB600N–007, Revision 1, dated April 13, 2006. The incorporation by reference of these documents was approved by the Director of the Federal Register in accordance with 5 U.S.C. 552(a) and 1 CFR part 51. Copies may be obtained from MD Helicopters Inc., Attn: Customer Support Division, 4555 E. McDowell Rd., Mail Stop M615, Mesa, Arizona 85215–9734, telephone 1–800–388–3378, fax 480–346–6813, or on the web at *www.mdhelicopters.com.* Copies may be inspected at the National Archives and Records Administration (NARA). For information on the availability of this material at NARA, call 202–741–6030, or go to: *http://www.archives.gov/federal_register/code_of_federal_regulations/ibr_locations.html.*

(j) This amendment becomes effective on April 27, 2006.

Issued in Fort Worth, Texas, on April 20, 2006.

Mark R. Schilling,

Acting Manager, Rotorcraft Directorate, Aircraft Certification Service.

[FR Doc. 06–3986 Filed 4–26–06; 8:45 am]

BILLING CODE 4910–13–P

DEPARTMENT OF TRANSPORTATION

Federal Aviation Administration

14 CFR Part 71

[Docket No. FAA–2005–23271; Airspace Docket No. 05–AWP–15]

RIN 2120–AA66

Establishment of Class E Enroute Domestic Airspace Area, Vandenberg AFB, CA

AGENCY: Federal Aviation Administration (FAA), DOT.

ACTION: Direct final rule, confirmation of effective date.

SUMMARY: This document confirms the effective date of the direct final rule which establishes a Class E enroute domestic airspace area, Vandenberg AFB, CA, to replace existing Class G uncontrolled airspace.

DATES: *Effective Date:* 0901 UTC June 8, 2006.

FOR FURTHER INFORMATION CONTACT: Francie Hope, Western Terminal Operations Airspace Specialist, AWP–520.3, Federal Aviation Administration, 15000 Aviation Boulevard, Lawndale, California 90261, telephone (310) 725–6502.

SUPPLEMENTARY INFORMATION: The FAA published this direct final rule with a request for comments in the **Federal Register** on March 7, 2006 (71 FR 11297). In addition, a correction to the direct final rule was published in the **Federal Register** on March 24, 2006, changing the effective date to June 8, 2006, to coincide with the IFR Enroute Low Altitude charting date. The FAA uses the direct final rulemaking procedure for a non-controversial rule where the FAA believes that there will be no adverse public comment. This direct final rule advised the public that no adverse comments were anticipated, and that unless a written adverse comment, or written notice of intent to submit such an adverse comment, were received within the comment period, the regulation will become effective on June 8, 2006, as per the final rule correction. No adverse comments were received, and thus this notice confirms that this direct final rule will become effective on that date.

Issued in Los Angeles, California, on April 12, 2006.

Tony DiBernardo,

Manager, Resource Management Branch, AWP–540, Western Terminal Operations.

[FR Doc. 06–3948 Filed 4–26–06; 8:45 am]

BILLING CODE 4910–13–M

SOCIAL SECURITY ADMINISTRATION

20 CFR Part 404

RIN 0960–AG32

Filing of Applications and Requirements for Widow's and Widower's Benefits

AGENCY: Social Security Administration.

ACTION: Final rule.

SUMMARY: We are revising one of our regulations to clarify that we will protect a title II claimant's filing date as of the date the claimant or other proper applicant on the claimant's behalf completes and transmits to the Social Security Administration (SSA) the Personal Information Identification data on the Internet Social Security Benefit Application (ISBA). This revision addresses an aspect of implementing the ISBA to provide certain rights to Internet filers that we afford to other filers.

In addition, we are correcting one word in a different title II regulation. The revision is necessary to correctly reflect the circumstances under which a claimant for widow's or widower's benefits as the insured person's surviving divorced spouse would be considered ''unmarried.''

DATES: This final rule is effective on April 27, 2006.

FOR FURTHER INFORMATION CONTACT: Lola Doyle, Social Insurance Specialist, Office of Income Security Programs, Mary Jayne Neubauer, Social Insurance Specialist, Office of Income Security Programs or Peter F. White, Social Insurance Specialist, Office of Income Security Programs, Social Security Administration, 252 Altmeyer Building, 6401 Security Boulevard, Baltimore, MD 21235–6401, 410–965–5899 or TTY 1–800–966–5609, for information about this **Federal Register** document. For information on eligibility or filing for benefits, call our national toll-free number, 1–800–772–1213 or TTY 1–800–325–0778, or visit our Internet site, Social Security Online, at *http://www.socialsecurity.gov.*

SUPPLEMENTARY INFORMATION:

Electronic Version

The electronic file of this document is available on the date of publication in the **Federal Register** on the Internet site for the Government Printing Office at *http://www.gpoaccess.gov/fr/index.html.*

Background

Various sections of the Social Security Act (Act) and § 404.603 of our regulations provide that filing an application with SSA is one of the requirements for entitlement to Federal old-age, survivors and disability insurance benefits. A valid application may only be signed by a proper applicant as defined in our regulations. Section 404.612 of our regulations specifies who may sign an application. If the claimant becomes entitled to any past-due benefits, we pay the past-due benefits in accordance with the Act based upon the filing date of the application. We have long recognized, however, that an individual might intend to file a claim for benefits but be unable to complete an application immediately.

Accordingly, § 404.630 of our regulations provides that any proper applicant may establish an earlier ''protective'' filing date based upon that individual's initial contact with us. If all of the requirements for a protective filing are satisfied, we will establish the date of the initial contact as the protective filing date of the application. Among the requirements for preserving the protective filing date, § 404.630(c) provides that a proper applicant must file a signed application with us within six months of the date we notify the claimant or other person listed in § 404.612 about the need to file an application. This protective filing date prevents a potential loss of any retroactive benefits.

Our regulations currently do not explain how we determine a claimant's application filing date when a proper applicant intends to file a benefit claim

and begins an Internet benefit application, but does not complete and file a signed application until a later date. Currently, if a proper applicant initially contacts us by telephone about filing an application for benefits, our documentation of that contact may constitute a protective filing in the event a completed application is timely filed after the month of the initial contact. We have decided to afford Internet filers protective filing dates like those we afford to other filers, and are revising our regulation to reflect this policy. Under this final rule, we explain that we will use the date that we receive the Personal Identification Information data on the ISBA (usually the date that the proper applicant starts the ISBA) as a protective filing date. This could prevent a loss of benefits if a valid application is timely filed after the month of the initial Internet session. The Social Security Web site address for Internet filers is: *http://www.socialsecurity.gov*.

On a separate matter, the regulation at § 404.336(e)(3) implements sections 202(e)(3) and 202(f)(3) of the Act. These statutory provisions explain when we must deem a claimant to be unmarried for the purpose of entitlement to widow's or widower's benefits as the insured surviving divorced spouse under sections 202(e)(1)(A) and 202(f)(1)(A) of the Act. Due to a drafting error, the current regulation at § 404.336(e)(3) incorrectly requires one of the statutorily mandated criteria instead of both, as the statute requires. This error was inadvertently introduced during a general rewriting of regulations in 2003, while the correct regulatory language was incorporated in Agency regulations before that date. See 68 FR 4700, 4701 (January 30, 2003); 20 CFR 404.336(e)(3) (1986–2002). We are revising § 404.336(e)(3) to correct the word and state:

You are now at least age 50 but not yet age 60 and you meet both of the conditions in paragraphs (e)(3)(i) and (ii) of this section.

The revised language will correctly reflect the underlying statutory authority.

Explanation of Changes

We are revising § 404.630(b) of our regulations by adding a third sentence to state that we will treat the date that a claimant or other proper applicant acting on the claimant's behalf completes and transmits the Personal Identification Information data on the ISBA to us as a protective filing under certain circumstances. This date will be treated as a protective filing date provided that a completed application is filed within six months after the date we notify the claimant about the need to file an application and all other applicable requirements are met. In addition, we are revising the second sentence in § 404.630(b). Because the first sentence of § 404.630(b) discusses who can sign a written statement, we will remove the word ''you'' from the second sentence to avoid potential confusion about the meaning of the second sentence.

We are amending § 404.336(e)(3) of our regulations because it incorrectly states the conditions under which the insured person's surviving divorced spouse is deemed ''unmarried'' for purposes of entitlement to widow's or widower's benefits. Correcting the unintended error will restore the regulation to its longstanding substantive statement that reflects pertinent provisions of sections 202(e)(3) and 202(f)(3) of the Act. The change to § 404.336(e)(3) will require surviving divorced spouses to meet both of the conditions in paragraphs (e)(3)(i) and (ii) of this section.

Regulatory Procedures

Pursuant to section 702(a)(5) of the Act, 42 U.S.C. 902(a)(5), we follow the Administrative Procedure Act (APA) rulemaking procedures specified in 5 U.S.C. 553 in the development of regulations. The APA provides exceptions to its notice and public comment procedures when an agency finds that there is good cause for dispensing with such procedures on the basis that they are impracticable, unnecessary, or contrary to the public interest. We have determined that, under 5 U.S.C. 553(b)(B), good cause exists for dispensing with the notice and public comment procedures for this rule. Good cause exists because this final rule only makes minor clarifying and corrective regulatory changes. We are clarifying in these rules that we are providing Internet filers with protective filing dates like those we afford to individuals who file by other methods so that the maximum potential entitlement benefits may be paid upon any allowance of the claims. In addition, we are correcting an inadvertent error in a longstanding regulation to reflect non-discretionary aspects of the Social Security Act. Seeking prior public comment for the conforming clarification or the non-discretionary correction is unnecessary and would be contrary to the public interest in the payment of potential benefits as authorized by the Social Security Act. Accordingly, we are issuing these changes to our regulations as a final rule.

In addition, we find good cause for dispensing with the 30-day delay in the effective date of a substantive rule, provided for by 5 U.S.C. 553(d). As explained above, we are conforming our treatment of application filing dates for Internet benefit filers with other benefit filers. Also, as explained above, we are revising our rules on title II benefits for widows and widowers to reflect current law. Without these changes, our rules will not explain our uniform filing policies, will not reflect current law, and thus may mislead the public. Therefore, we find that it is in the public interest to make these rules effective upon publication.

Executive Order 12866

We have consulted with the Office of Management and Budget (OMB) and determined that the rule does not meet the criteria for a significant regulatory action under Executive Order 12866, as amended by Executive Order 13258. Thus, it was not reviewed by OMB.

Regulatory Flexibility Act

We certify that this rule does not have a significant economic impact on a substantial number of small entities because it affects only individuals. Thus, a regulatory flexibility analysis as provided in the Regulatory Flexibility Act, as amended, is not required.

Paperwork Reduction Act

This rule imposes no additional reporting or recordkeeping requirements that requires OMB clearance.

(Catalog of Federal Domestic Assistance Program Nos. 96.001, Social Security-Disability Insurance; 96.002 Social Security-Retirement Insurance; and 96.004 Social Security-Survivors Insurance.)

List of Subjects in 20 CFR Part 404

Administrative practice and procedure, Blind, Disability benefits, Old-Age, Survivors and Disability Insurance, Reporting and recordkeeping requirements, Social Security.

Dated: April 19, 2006.

Jo Anne B. Barnhart,

Commissioner of Social Security.

■ For the reasons set out in the preamble, subparts D and G of part 404 of chapter III of title 20 of the Code of Federal Regulations are amended as set forth below:

PART 404—FEDERAL OLD-AGE, SURVIVORS AND DISABILITY INSURANCE (1950–)

Subpart D—[Amended]

■ 1. The authority citation for subpart D of part 404 continues to read as follows:

Authority: Secs. 202, 203(a) and (b), 205(a), 216, 223, 225, 228(a)–(e), and 702(a)(5) of the Social Security Act (42 U.S.C. 402, 403(a) and (b), 405(a), 416, 423, 425, 428(a)–(e), and 902(a)(5)).

■ 2. Section 404.336(e)(3) introductory text is revised to read as follows:

§ 404.336 How do I become entitled to widow's or widower's benefits as a surviving divorced spouse?

* * * * *

(e) * * *

(3) You are now at least age 50 but not yet age 60 and you meet both of the conditions in paragraphs (e)(3)(i) and (ii) of this section:

* * * * *

Subpart G—[Amended]

■ 3. The authority citation for subpart G of part 404 continues to read as follows:

Authority: Secs. 202(i), (j), (o), (p), and (r), 205(a), 216(i)(2), 223(b), 228(a), and 702(a)(5) of the Social Security Act (42 U.S.C. 402(i), (j), (o), (p), and (r), 405(a), 416(i)(2), 423(b), 428(a), and 902(a)(5)).

■ 4. Amend § 404.630(b) by revising the second sentence of paragraph (b) and adding a third sentence to paragraph (b) to read as follows:

§ 404.630 Use of date of written statement as filing date.

* * * * *

(b) * * * If the claimant, the claimant's spouse, or a person described in § 404.612 telephones us and advises us of his or her intent to file a claim but cannot file an application before the end of the month, we will prepare and sign a written statement if it is necessary to prevent the loss of benefits. If the claimant, the claimant's spouse, or a person described in § 404.612 contacts us through the Internet by completing and transmitting the Personal Identification Information data on the Internet Social Security Benefit Application to us, we will use the date of the transmission as the filing date if it is necessary to prevent the loss of benefits.

* * * * *

[FR Doc. 06–3983 Filed 4–26–06; 8:45 am]

BILLING CODE 4191–02–P

DEPARTMENT OF HEALTH AND HUMAN SERVICES

Food and Drug Administration

21 CFR Part 558

New Animal Drugs for Use in Animal Feeds; Lasalocid and Chlortetracycline

AGENCY: Food and Drug Administration, HHS.

ACTION: Final rule, technical amendment.

SUMMARY: The Food and Drug Administration (FDA) is amending the animal drug regulations to reflect approval of a new animal drug application (NADA) filed by Alpharma Inc. The NADA provides for use of approved single-ingredient Type A medicated articles containing lasalocid and chlortetracycline to formulate two-way, combination drug Type B and Type C medicated feeds for pasture cattle and cattle fed in confinement for slaughter.

DATES: This rule is effective April 27, 2006.

FOR FURTHER INFORMATION CONTACT: Eric S. Dubbin, Center for Veterinary Medicine (HFV–126), Food and Drug Administration, 7500 Standish Pl., Rockville, MD 20855, 301–827–0232, e-mail: *eric.dubbin@fda.hhs.gov*.

SUPPLEMENTARY INFORMATION: Alpharma Inc., One Executive Drive, Fort Lee, NJ 07024, filed NADA 141–250 for use of BOVATEC (lasalocid sodium) and AUREOMYCIN (chlortetracycline) Type A medicated articles to formulate two-way, combination drug Type B and Type C medicated feeds for pasture cattle and cattle fed in confinement for slaughter. The NADA is approved as of March 31, 2006, and the regulations are amended in §§ 558.128 and 558.311 (21 CFR 558.128 and 558.311) to reflect the approval. The basis of approval is discussed in the freedom of information summary.

In addition, § 558.128 is amended to reflect an approved concentration for single-ingredient chlortetracycline Type C medicated cattle feed which, in error, was omitted from the final rule announcing its approval (67 FR 43248, June 27, 2002). Also, FDA has found that the April 1, 2005, edition of parts 500 to 599 of title 21 of the Code of Federal Regulations (CFR) does not accurately reflect several special considerations regarding use for lasalocid. These special considerations were inadvertently deleted as a publication error. At this time, the regulations are being amended in § 558.311 to correct this error. Furthermore, § 558.311 is amended to codify an approved label statement warning against the use of medicated feeds containing lasalocid in calves to be processed for veal. These actions are being taken to improve the accuracy of the regulations.

In accordance with the freedom of information provisions of 21 CFR part 20 and 21 CFR 514.11(e)(2)(ii), a summary of safety and effectiveness data and information submitted to support approval of this application may be seen in the Division of Dockets Management (HFA–305), Food and Drug Administration, 5630 Fishers Lane, rm. 1061, Rockville, MD 20852, between 9 a.m. and 4 p.m., Monday through Friday.

The agency has determined under 21 CFR 25.33(a)(2) that this action is of a type that does not individually or cumulatively have a significant effect on the human environment. Therefore, neither an environmental assessment nor an environmental impact statement is required.

This rule does not meet the definition of ''rule'' in 5 U.S.C. 804(3)(A) because it is a rule of ''particular applicability.'' Therefore, it is not subject to the congressional review requirements in 5 U.S.C. 801–808.

List of Subjects in 21 CFR Part 558

Animal drugs, Animal feeds.

■ Therefore, under the Federal Food, Drug, and Cosmetic Act and under authority delegated to the Commissioner of Food and Drugs and redelegated to the Center for Veterinary Medicine, 21 CFR part 558 is amended as follows:

PART 558—NEW ANIMAL DRUGS FOR USE IN ANIMAL FEEDS

■ 1. The authority citation for 21 CFR part 558 continues to read as follows:

Authority: 21 U.S.C. 360b, 371.

■ 2. Amend § 558.128 as follows:

■ a. In the table in paragraph (e)(4), redesignate paragraphs (e)(4)(v) through (e)(4)(viii) as paragraphs (e)(4)(vi) through (e)(4)(ix);

■ b. In the table in paragraph (e)(4), add new paragraph (e)(4)(v) to read as follows;

■ c. Redesignate paragraphs (e)(6)(viii) through (e)(6)(xiii) as paragraphs (e)(6)(ix) through (e)(6)(xiv); and

■ d. Add new paragraph (e)(6)(viii).

The additions read as follows:

§ 558.128 Chlortetracycline.

* * * * *

(e) * * *

(4) * * *

Chlortetracycline amount	Indications for use	Limitations	Sponsor
*	* * *	* *	*
(v) 500 to 4,000 g/ton	Calves, beef and nonlactating dairy cattle; treatment of bacterial enteritis caused by *E. coli* and bacterial pneumonia caused by *P. multocida* organisms susceptible to chlortetracycline.	Hand feed continuously for not more than 5 days to provide 10 mg/lb body weight per day.	046573.
*	* * *	* *	*

* * * * *

(6) * * *

(viii) Lasalocid in accordance with § 558.311.

* * * * *

■ 3. In § 558.311, add paragraphs (d)(5), (d)(6), and (d)(7); and in the table in paragraph (e)(1) add paragraphs (xx) through (xxiii) to read as follows:

§ 558.311 Lasalocid.

* * * * *

(d) * * *

(5) Required label statements:

(i) For liquid Type B feed (cattle and sheep): Mix thoroughly with grain and/or roughage prior to feeding. Feeding undiluted, mixing errors, or inadequate mixing (recirculation or agitation) may result in an excess lasalocid concentration which could be fatal to cattle and sheep. Do not allow horses or other equines access to Type A articles or Type B feeds containing lasalocid as ingestion may be fatal. Safety of lasalocid for use in unapproved species has not been established.

(ii) For Type A articles or Type B feeds (cattle and sheep): Feeding undiluted or mixing errors may result in an excess lasalocid concentration which could be fatal to cattle and sheep. Do not allow horses or other equines access to Type A articles or Type B feeds containing lasalocid as ingestion may be fatal. Safety of lasalocid for use in unapproved species has not been established.

(iii) For Type A articles, Type B or Type C feeds (cattle): A withdrawal period has not been established for this product in preruminating calves. Do not use in calves to be processed for veal.

(6) Lasalocid Type A medicated articles containing lasalocid dried fermentation residue are for use in cattle and sheep feed only.

(7) Each use in a free-choice Type C cattle feed as in paragraphs (e)(1)(xii) and (e)(1)(xviii) of this section must be the subject of an approved NADA or supplemental NADA as provided in § 510.455 of this chapter.

(e)(1) * * *

Lasalocid sodium activity in grams per ton	Combination in grams per ton	Indications for use	Limitations	Sponsor
*	*	* *	* *	*
(xx) 10 to 30.	Chlortetracycline 25 to 100.	1. Cattle fed in confinement for slaughter: For improved feed efficiency; and for control of bacterial pneumonia associated with shipping fever complex caused by *Pasteurella* spp. susceptible to chlortetracycline.	Feed continuously in complete feed at a rate of 350 mg chlortetracycline and not less than 100 mg nor more than 360 mg of lasalocid sodium activity per head per day.	046573
		2. Cattle under 700 pounds fed in confinement for slaughter: For improved feed efficiency; and for control of active infection of anaplasmosis caused by *Anaplasma marginale* susceptible to chlortetracycline.	Feed continuously in complete feed at a rate of 350 mg chlortetracycline and not less than 100 mg nor more than 360 mg of lasalocid sodium activity per head per day.	046573
(xxi) 10 to 30.	Chlortetracycline 500 to 2000.	Cattle fed in confinement for slaughter: For improved feed efficiency; and for treatment of bacterial enteritis caused by *E. coli* and bacterial pneumonia caused by *P. multocida* organisms susceptible to chlortetracycline.	Feed continuously in complete feed for not more than 5 days to provide 10 mg chlortetracycline per lb body weight per day and not less than 100 mg nor more than 360 mg of lasalocid sodium activity per head per day.	046573
(xxii) 25 to 30.	Chlortetracycline 25 to 42.2.	1. Cattle fed in confinement for slaughter: For increased rate of weight gain and improved feed efficiency; and for control of bacterial pneumonia associated with shipping fever complex caused by *Pasteurella* spp. susceptible to chlortetracycline.	Feed continuously in complete feed at a rate of 350 mg chlortetracycline and not less than 250 mg nor more than 360 mg of lasalocid sodium activity per head per day.	046573
		2. Cattle under 700 pounds fed in confinement for slaughter: For increased rate of weight gain and improved feed efficiency; and for control of active infection of anaplasmosis caused by *Anaplasma marginale* susceptible to chlortetracycline.	Feed continuously in complete feed at a rate of 350 mg chlortetracycline and not less than 250 mg nor more than 360 mg of lasalocid sodium activity per head per day.	046573

Lasalocid sodium activity in grams per ton	Combination in grams per ton	Indications for use	Limitations	Sponsor
(xxiii) 25 to 30.	Chlortetracycline 500 to 1200.	Cattle fed in confinement for slaughter: For increased rate of weight gain and improved feed efficiency; and for treatment of bacterial enteritis caused by *E. coli* and bacterial pneumonia caused by *P. multocida* organisms susceptible to chlortetracycline.	Feed continuously in complete feed for not more than 5 days to provide 10 mg chlortetracycline per lb body weight per day and not less than 250 mg nor more than 360 mg of lasalocid sodium activity per head per day.	046573
(xxiv) 30 to 181.8.	Chlortetracycline 25 to 2800.	1. Beef cattle under 700 pounds: For control of coccidiosis caused by *Eimeria bovis* and *E. zuernii*; and for control of active infection of anaplasmosis caused by *Anaplasma marginale* susceptible to chlortetracycline.	Hand feed continuously at a rate of 350 mg chlortetracycline per head per day and 1 mg lasalocid per 2.2 lb body weight per day with a maximum of 360 mg lasalocid per head per day.	046573
		2. Beef cattle up to 800 pounds: For control of coccidiosis caused by *Eimeria bovis* and *E. zuernii*; and for control of bacterial pneumonia associated with shipping fever complex caused by *Pasteurella* spp. susceptible to chlortetracycline.	Hand feed continuously at a rate of 350 mg chlortetracycline per head per day and 1 mg lasalocid per 2.2 lb body weight per day with a maximum of 360 mg lasalocid per head per day.	046573
(xxv) 30 to 181.8.	Chlortetracycline 500 to 4000.	Cattle up to 800 pounds: For control of coccidiosis caused by *Eimeria bovis* and *E. zuernii*; and for treatment of bacterial enteritis caused by *E. coli* and bacterial pneumonia caused by *P. multocida* organisms susceptible to chlortetracycline.	Hand feed continuously for not more than 5 days to provide 10 mg chlortetracycline per lb body weight per day and 1 mg lasalocid per 2.2 lb body weight per day with a maximum of 360 mg lasalocid per head per day.	046573
(xxvi) 30 to 600.	Chlortetracycline 25 to 700.	1. Pasture cattle (slaughter, stocker, feeder cattle, and beef replacement heifers): for increased rate of weight gain; and for control of bacterial pneumonia associated with shipping fever complex caused by *Pasteurella* spp. susceptible to chlortetracycline.	Hand feed continuously at a rate of 350 mg chlortetracycline and not less than 60 mg or more than 300 mg lasalocid per head daily in at least 1 lb of feed. Intakes of lasalocid in excess of 200 mg/head/day have not been shown to be more effective than 200 mg/head/day.	046573
		2. Pasture cattle under 700 pounds (slaughter, stocker, feeder cattle, and beef replacement heifers): for increased rate of weight gain; and for control of active infection of anaplasmosis caused by *Anaplasma marginale* susceptible to chlortetracycline.	Hand feed continuously at a rate of 350 mg chlortetracycline and not less than 60 mg or more than 300 mg lasalocid per head daily in at least 1 lb of feed. Intakes of lasalocid in excess of 200 mg/head/day have not been shown to be more effective than 200 mg/head/day.	046573
(xxvii) 30 to 600.	Chlortetracycline 25 to 1100.	Pasture cattle over 700 pounds (slaughter, stocker, feeder cattle, and beef replacement heifers): For increased rate of weight gain; and for control of control of active infection of anaplasmosis caused by *Anaplasma marginale* susceptible to chlortetracycline.	Hand feed continuously at a rate of 0.5 mg chlortetracycline per lb body weight per day and not less than 60 mg or more than 300 mg lasalocid per head daily in at least 1 lb of feed. Intakes of lasalocid in excess of 200 mg/head/day have not been shown to be more effective than 200 mg/head/day.	046573
(xxiii) 30 to 600.	Chlortetracycline 500 to 4000.	Pasture cattle (slaughter, stocker, feeder cattle, and dairy and beef replacement heifers): For increased rate of weight gain; and for treatment of bacterial enteritis caused by *E. coli* and bacterial pneumonia caused by *P. multocida* organisms susceptible to chlortetracycline.	Hand feed continuously for not more than 5 days to provide 10 mg chlortetracycline per lb body weight per day and not less than 60 mg or more than 300 mg lasalocid per head daily in at least 1 lb of feed. Intakes of lasalocid in excess of 200 mg/head/day have not been shown to be more effective than 200 mg/head/day.	046573

* * * * * * *

* * * * *

Dated: April 17, 2006.

Stephen F. Sundlof,

Director, Center for Veterinary Medicine.

[FR Doc. 06–3953 Filed 4–26–06; 8:45 am]

BILLING CODE 4160–01–S

ENVIRONMENTAL PROTECTION AGENCY

40 CFR Parts 9, 86 and 600

[FRL–8161–7]

OMB Approvals Under the Paperwork Reduction Act; Technical Amendment

AGENCY: Environmental Protection Agency (EPA).

ACTION: Final rule.

SUMMARY: In compliance with the Paperwork Reduction Act (PRA), this technical amendment amends the table that lists the Office of Management and Budget (OMB) control numbers issued under the PRA for Motor Vehicle Emission and Fuel Economy Compliance; Light Duty Vehicles, Light Duty Trucks, and Highway Motorcycles.

DATES: *Effective Date:* This final rule is effective April 27, 2006.

The information collection requirements for part 86 published in the **Federal Register** at 59 FR 16262, April 6, 1994, which apply to 1998 and later model year vehicles, have been approved by the Office of Management and Budget and are effective April 27, 2006.

40 CFR 600.206–93, 600.207–93, 600.209–95, 600.307–95, and 600.510–93, published at 59 FR 39638, August 3, 1994, containing information requirements which have been approved by the Office of Management and Budget, are effective April 27, 2006.

FOR FURTHER INFORMATION CONTACT: Lynn Sohacki, Certification and Compliance Division, 2000 Traverwood Drive, Ann Arbor, MI 48103; (734) 214–4851; *sohacki.lynn@epa.gov.*

SUPPLEMENTARY INFORMATION: This rule does two things. First, EPA is amending the table in 40 CFR part 9 of currently approved information collection request (ICR) control numbers issued by OMB for various regulations. The amendment updates the table to list those information collection requirements approved by OMB on November 1, 2005, under control number 2060–0104. The regulations affected by the amendments are codified at 40 CFR parts 85 and 86. EPA will continue to present OMB control numbers in a consolidated table format to be codified in 40 CFR part 9 of the Agency's regulations, and in each CFR volume containing relevant EPA regulations. The table lists CFR citations with reporting, recordkeeping, or other information collection requirements, and the current OMB control numbers. This listing of the OMB control numbers and their subsequent codification in the CFR satisfies the requirements of the Paperwork Reduction Act (44 U.S.C. 3501 *et seq.*) and OMB's implementing regulations at 5 CFR part 1320.

Second, the rule also makes conforming amendments to the affected regulations by removing three sets of provisions in the Code of Federal Regulations on related information collections that are no longer applicable. The first of these provisions appears as a note at the end of the table of contents to part 86 of the Code and states that information collections in regulations appearing in the **Federal Register** on April 6, 1994, have not been approved by OMB. The referenced regulations implemented new onboard refueling vapor recovery (ORVR) requirements. They are covered by OMB 2060–0104 and have been in approved Information Collection Requests of EPA's 0783 series since 1995. The note has long been out of date and this amendment removes it. Similarly, the second set of provisions is five notices appearing in part 600 regarding information collections contained in regulations appearing in the **Federal Register** on August 3, 1994. That rule modified the fuel economy regulations to include alternative-fueled vehicles. These regulations are covered by OMB 2060–0104 and have also been in approved Information Collection Requests of EPA's 0783 series since 1995. Today's rule removes these notices as well. The removal of these first two sets of provisions is accomplished by the language under the Effective Date heading of today's rule. The effective date given under that heading is the date of publication of today's rule. The information collections themselves have long been approved by OMB, as discussed above, are currently covered by OMB 2060–0104, and are listed with the relevant CFR citations in part 9. The third provision is 40 CFR part 86, subpart AA. Section 86.2500 in subpart AA states that ''All reporting and recordkeeping requirements contained in part 86, except for those requirements contained in subparts G and K, have been approved by the Office of Management and Budget under control number 2060–0104.'' This provision was promulgated at 50 FR 10648 on March 15, 1985. Subparts G and K deal with Selective Enforcement Auditing of light-duty vehicles and of heavy-duty engines, heavy-duty vehicles, and light-duty trucks. The ICR for the March 15, 1985, rulemaking, ICR 0783.29, was approved without restrictions in August, 1985. Both the light and heavy duty Selective Enforcement Audit information collections were covered by OMB 2060–0064, until the heavy-duty portion was incorporated into 2060–0287 with IRC 1684.06 and the light-duty portion was incorporated into 2060–0104. Both of these control numbers have current approvals and the list in part 9 is updated to reflect this coverage of Selective Enforcement Audit collections. Today's rule removes Subpart AA.

The ICRs covered by this rule were previously subject to public notice and comment prior to OMB approval. Due to the technical nature of the table and conforming amendments, EPA finds that further notice and comment is unnecessary. As a result, EPA finds that there is ''good cause'' under section 553(b)(B) of the Administrative Procedure Act, 5 U.S.C. 553(b)(B), to amend this table without prior notice and comment.

I. Administrative Requirements

Under Executive Order 12866 (58 FR 51735, October 4, 1993), this action is not a ''significant regulatory action'' and is therefore not subject to review by the Office of Management and Budget. In addition, this action does not impose any enforceable duty, contain any unfunded mandate, or impose any significant or unique impact on small governments as described in the Unfunded Mandates Reform Act of 1995 (Pub. L. 104–4). This rule also does not require prior consultation with State, local, and tribal government officials as specified by Executive Order 12875 (58 FR 58093, October 28, 1993) or Executive Order 13084 (63 FR 27655 (May 10, 1998), or involve special consideration of environmental justice related issues as required by Executive Order 12898 (59 FR 7629, February 16, 1994). Because this action is not subject to notice-and-comment requirements under the Administrative Procedure Act or any other statute, it is not subject to the regulatory flexibility provisions of the Regulatory Flexibility Act (5 U.S.C. 601 *et seq.*). This rule also is not subject to Executive Order 13045 (62 FR 19885, April 23, 1997) because EPA interprets E.O. 13045 as applying only to those regulatory actions that are based on health or safety risks, such that the analysis required under section 5–501 of the Order has the potential to influence the regulation. This rule is not subject

to E.O. 13045 because it does not establish an environmental standard intended to mitigate health or safety risks.

Congressional Review Act

The Congressional Review Act, 5 U.S.C. 801 *et seq.*, as added by the Small Business Regulatory Enforcement Fairness Act of 1996, generally provides that before a rule may take effect, the agency promulgating the rule must submit a rule report, which includes a copy of the rule, to each House of the Congress and to the Comptroller General of the United States. Section 808 allows the issuing agency to make a good cause finding that notice and public procedure is impracticable, unnecessary or contrary to the public interest. This determination must be supported by a brief statement. 5 U.S.C. 808(2). As stated previously, EPA has made such a good cause finding, including the reasons therefor, and established an effective date of April 27, 2006. EPA will submit a report containing this rule and other required information to the U.S. Senate, the U.S. House of Representatives, and the Comptroller General of the United States prior to publication of the rule in the **Federal Register**. This action is not a ''major rule'' as defined by 5 U.S.C. 804(2).

List of Subjects

40 CFR Part 9

Environmental protection, Reporting and recordkeeping requirements.

40 CFR Part 86

Environmental protection, Administrative practice and procedure, Air pollution control, Confidential business information, Diesel, Gasoline, Fees, Imports, Labeling, Motor vehicle pollution, Reporting and recordkeeping requirements.

Dated: April 17, 2006.

Margo Tsirigotis Oge,

Director, Office of Transportation and Air Quality.

■ For the reasons set out in the preamble, 40 CFR parts 9 and 86 are amended as follows:

PART 9—[AMENDED]

■ 1. The authority citation for part 9 continues to read as follows:

Authority: 7 U.S.C. 135 *et seq.*, 136–136y; 15 U.S.C. 2001, 2003, 2005, 2006, 2601–2671; 21 U.S.C. 331j, 346a, 348; 31 U.S.C. 9701; 33 U.S.C. 1251 *et seq.*, 1311, 1313d, 1314, 1318, 1321, 1326, 1330, 1342, 1344, 1345(d) and (e), 1361; E.O. 11735, 38 FR 21243, 3 CFR, 1971–1975 Comp. p. 973; 42 U.S.C. 241, 242b, 243, 246, 300f, 300g, 300g–1, 300g–2, 300g–3, 300g–4, 300g–5, 300g–6, 300j–1, 300j–2, 300j–3, 300j–4, 300j–9, 1857 *et seq.*, 6901–6992k, 7401–7671q, 7542, 9601–9657, 11023, 11048.

■ 2. In § 9.1 the table is amended as follows:

■ a. Under the heading ''Control of Air Pollution From Motor Vehicles and Motor Vehicle Engines'' by:

■ i. Removing the entry for ''85.2112–85.2123'';

■ ii. Revising entries for ''85.1504'', ''85.1505'', ''85.1507'', ''85.1508'', ''85.1509'', ''85.1511'', ''85.1512'', ''85.1514'' , ''85.2114'' and ''85.2115''; and

■ iii. Adding entries in numerical order for ''85.1710'', ''85.1808'', ''85.2110'', ''85.2116'', ''85.2117'', ''85.2118'', ''85.2119'', ''85.2120'', ''85.2123'', and ''85.2401–85.2409''.

■ b. Under the heading ''Control of Emissions From New and In-Use Highway Vehicles and Engines'' by:

■ i. Removing the entry for ''86.2500'' and ''86.449–2006'';

■ ii. Revising the entries for ''86.446–2006'', ''86.447–2006'', 86.448–2006'', ''86.603–88'', ''86.605–88'', ''86.606–84'', ''86.608–88'', ''86.608–90'', ''86.609–84'', ''86.612–84'', ''86.614–84'', ''86.1003–90'' , ''86.1003–97'', ''86.1003–2001'', ''86.1004–84'', ''86.1005–90'', ''86.1006–84'', ''86.1007–84'', ''86.1008–90'', ''86.1008–96'', ''86.1009–84'', ''86.1009–96'', ''86.1009–2001'', ''86.1012–84'', ''86.1012–97'', ''86.1014–84'', ''86.1015–87'', ''86.1708'', ''86.1709'', ''86.1710'', ''86.1713'', ''86.1714'', ''86.1717'', ''86.1724'', ''86.1725'', ''86.1726'', ''86.1728'', ''86.1735'', ''86.1770'', ''86.1771'', ''86.1776'', ''86.1777'', and ''86.1778''; and

■ iii. Adding an entry in numerical order for ''86.445–2006'' and ''86.449'' to read as follows:

§ 9.1 OMB approvals under the Paperwork Reduction Act.

* * * * *

40 CFR citation	OMB control No.
* * * * *	
Control of Air Pollution From Motor Vehicles and Motor Vehicle Engines	
* * * * *	
85.1504	2060–0095
85.1505	2060–0095
85.1507	2060–0095
85.1508	2060–0095
85.1509	2060–0095
85.1511	2060–0095
85.1512	2060–0095
85.1514	2060–0095
* * * * *	
85.1710	2060–0104
* * * * *	
85.1808	2060–0104
* * * * *	
85.2110	2060–0104
85.2114	2060–0060
85.2115	2060–0060
85.2116	2060–0060
85.2117	2060–0060
85.2118	2060–0060
85.2119	2060–0060
85.2120	2060–0060
85.2123	2060–0104
* * * * *	
85.2401–85.2409	2060–0104, 2060–0545
Control of Emissions From New and In-Use Highway Vehicles and Engines	
* * * * *	
86.445–2006	2060–0104
86.446–2006	2060–0104
86.447–2006	2060–0104
86.448–2006	2060–0104
86.449	2060–0104
* * * * *	
86.603–88	2060–0104
* * * * *	
86.605–88	2060–0104
* * * * *	
86.606–84	2060–0104
* * * * *	
86.608–88	2060–0104
86.608–90	2060–0104
* * * * *	
86.609–84	2060–0104
* * * * *	
86.612–84	2060–0104
* * * * *	
86.614.84	2060–0104
* * * * *	
86.1003–90	2060–0104, 2060–0287
86.1003–97	2060–0104, 2060–0287
86.1003–2001	2060–0104, 2060–0287
86.1004–84	2060–0104, 2060–0287
86.1005–90	2060–0104, 2060–0287
86.1006–84	2060–0104, 2060–0287
86.1007–84	2060–0104, 2060–0287
86.1008–90	2060–0104, 2060–0287
86.1008–96	2060–0104, 2060–0287

40 CFR citation	OMB control No.
86.1009–84	2060–0104, 2060–0287
86.1009–96	2060–0104, 2060–0287
86.1009–2001	2060–0104, 2060–0287
86.1012–84	2060–0104, 2060–0287
86.1012–97	2060–0104, 2060–0287
86.1014–84	2060–0104, 2060–0287
86.1015–87	2060–0104, 2060–0287
* * * * *	
86.1708	2060–0104
86.1709	2060–0104
86.1710	2060–0104
* * * * *	
86.1713	2060–0104
86.1714	2060–0104
86.1717	2060–0104
* * * * *	
86.1724	2060–0104
86.1725	2060–0104
86.1726	2060–0104
86.1728	2060–0104
* * * * *	
86.1735	2060–0104
86.1770	2060–0104
86.1771	2060–0104
86.1776	2060–0104
86.1777	2060–0104
86.1778	2060–0104
* * * * *	

PART 86—[AMENDED]

■ 3. The authority citation for part 86 continues to read as follows:

Authority: 42 U.S.C. 7401–7671q.

Subpart AA—[Removed]

■ 4. Subpart AA is removed.

[FR Doc. 06–3900 Filed 4–26–06; 8:45 am]

BILLING CODE 6560–50–P

Proposed Rules

Federal Register
Vol. 71, No. 81
Thursday, April 27, 2006

This section of the FEDERAL REGISTER contains notices to the public of the proposed issuance of rules and regulations. The purpose of these notices is to give interested persons an opportunity to participate in the rule making prior to the adoption of the final rules.

DEPARTMENT OF AGRICULTURE

Agricultural Marketing Service

7 CFR Part 205

[Docket Number TM–06–06–PR]

RIN 0581–AC60

National Organic Program—Revisions to Livestock Standards Based on Court Order (Harvey v. Johanns) and 2005 Amendment to the Organic Foods Production Act of 1990 (OFPA)

AGENCY: Agricultural Marketing Service, USDA.

ACTION: Proposed rule.

SUMMARY: This proposed rule amends the National Organic Program (NOP) regulations to comply with the final judgment in the case of *Harvey* v. *Johanns* (*Harvey*) issued on June 9, 2005, by the U.S. District Court, District of Maine, and to address the November 10, 2005, amendment made to the Organic Foods Production Act of 1990 (7 U.S.C. 6501 *et seq.*, the OFPA), concerning the transition of dairy livestock into organic production.

Further, this proposed rule amends the NOP regulations to clarify that only nonorganically produced agricultural products listed in the NOP regulations may be used as ingredients in or on processed products labeled as ''organic'' or ''made with organic (specified ingredients or food group(s)).'' In accordance with the final judgment in *Harvey*, the revision emphasizes that only the nonorganically produced agricultural ingredients listed in the NOP regulations can be used in accordance with any specified restrictions and when the product is not commercially available in organic form.

To comply with the court order in *Harvey*, USDA is required to publish final revisions to the NOP regulations within 360 days of the court order, or by June 4, 2006.

Accordingly, this proposed rule amends the NOP regulations to eliminate the use of up to 20 percent nonorganically produced feed during the first 9 months of the conversion of a whole dairy herd from conventional to organic production. This proposed rule also addresses the amendment made to the OFPA concerning the transition of dairy livestock into organic production by allowing crops and forage from land included in the organic system plan of a dairy farm that is in the third year of organic management to be consumed by the dairy animals of the farm during the 12-month period immediately prior to the sale of organic milk and milk products.

DATES: Comments on this proposed rule must be submitted on or before May 12, 2006.

FOR FURTHER INFORMATION CONTACT: Mark Bradley, Associate Deputy Administrator, Transportation & Marketing Programs, National Organic Program, 1400 Independence Ave., SW., Room 4008—So., Ag Stop 0268, Washington, DC 20250. Telephone: (202) 720–3252; Fax: (202) 205–7808.

SUPPLEMENTARY INFORMATION:

I. Background

In 1990, Congress passed the OFPA, which required the U.S. Department of Agriculture (USDA) to develop national standards for organically produced agricultural products to assure consumers that agricultural products marketed as organic meet consistent, uniform standards. Based on the requirements of the OFPA, USDA established the National Organic Program (NOP) to develop national organic standards, including a National List of substances approved for and prohibited from use in organic production and handling, that would require agricultural products labeled as organic to originate from farms or handling operations certified by a State or private entity that has been accredited by USDA. On December 21, 2000 USDA published the final rule for the NOP in the **Federal Register** (7 CFR part 205). On October 21, 2002, the NOP regulations became fully implemented by USDA as the uniform standard of production and handling for organic agricultural products in the United States.

In October 2003, Arthur Harvey filed a complaint under the Administrative Procedure Act in the U.S. District Court, District of Maine. Mr. Harvey alleged that several subsections of the NOP regulations violated OFPA, were arbitrary, and not in accordance with law.

On January 26, 2005, the U.S. Court of Appeals for the First Circuit issued a decision in the case. The court upheld the NOP regulations in general, but remanded the case to the U.S. District Court, District of Maine, for, among other things, the entry of a declaratory judgment that stated 7 CFR 205.606 does not establish a blanket exemption to the National List requirements specified in 7 U.S.C. 6517, permitting the use of nonorganic agricultural products in or on processed organic products when their organic form is not commercially available. The district court ordered the Secretary to make publicly known within 30 days—through notice in the **Federal Register** to all certifying agents and interested parties—that 7 CFR 205.606 shall be interpreted to permit only the use of a nonorganically produced agricultural product that has been listed in 7 CFR 205.606 pursuant to National List procedures, and when a certifying agent has determined that the organic form of the agricultural product is not commercially available. USDA complied with this order on July 1, 2005 (70 FR 38090).

The court also ruled in favor of Mr. Harvey with respect to 7 CFR 205.605(b) of the NOP regulations, concerning the use of synthetic substances in or on processed products which contain a minimum of 95 percent organic content and are eligible to bear the USDA seal (7 CFR 205.605(b)). The court found § 205.605(b) contrary to the OFPA and in excess of the Secretary's rulemaking authority.

In addition, the court found in favor of Mr. Harvey with respect to 7 CFR 205.236(a)(2)(i) of the NOP regulations. This section creates an exception to the general requirements for the conversion of whole dairy herds to organic production. The court found the provisions at 7 CFR 205.236(a)(2)(i) contrary to the OFPA and in excess of the Secretary's rulemaking authority.

On June 9, 2005, the district court issued its final judgment and order in the case. A copy of the final judgment and order may be found at *https://www.ams.usda.gov/nop*.

Congressional Amendment to the OFPA

After the court issued its final judgment and order, Congress amended

the OFPA. On November 10, 2005, Congress amended the OFPA by permitting the addition of synthetic substances appearing on the National List for use in products labeled ''organic.'' The amendment restores the NOP regulation for organic processed products containing at least 95 percent organic ingredients on the National List and their ability to carry the USDA seal. Therefore, USDA will *not* have to revise the NOP regulations to prohibit the use of synthetic ingredients in processed products labeled as organic nor restrict these products' eligibility to carry the USDA seal.

Congress also amended the OFPA to allow a special provision for transitioning dairy livestock to organic production. The NOP regulations currently provide that when an entire, distinct herd is converted to organic production, the producer may, for the first 9 months of the year, provide a minimum of 80-percent feed that is either organic or raised from land included in the organic system plan and managed in compliance with organic crop requirements. The circuit court found these provisions to be contrary to the OFPA and in excess of the Secretary's rulemaking authority.

In the amendments to OFPA, Congress provided a new provision to allow crops and forage from land included in the organic system plan of a farm that is in the third year of organic management to be consumed by the dairy animals of the farm during the 12-month period immediately prior to the sale of organic milk and milk products. USDA is proposing to revise § 205.236(a)(2) to reflect this amendment to the OFPA in this rulemaking.

II. Overview of Amendments

The following provides an overview of the amendments to designated sections of the NOP regulations, based on the order of the U.S. District Court, District of Maine and a Congressional amendment to the OFPA: *Origin of Livestock (section 205.236).*

The circuit court declared that 7 CFR 205.236(a)(2)(i) is contrary to the OFPA and in excess of the Secretary's rulemaking authority. 7 CFR 205.236(a)(2)(i) and (ii) provide that ''When an entire, distinct herd is converted to organic production, the producer may: (i) For the first 9 months of the year, provide a minimum of 80-percent feed that is either organic or raised from land included in the organic system plan and managed in compliance with organic crop requirements; and (ii) Provide feed in compliance with § 205.237 for the final 3 months.''

The circuit court pointed to the OFPA requirement that dairy animals be fed 100 percent organic feed for twelve full months prior to the sale of their products as organic and stated that the OFPA does not authorize the Secretary to create an exception permitting a more lenient phased conversion process for dairy animals. On remand, the district court ordered the Secretary to revise the NOP regulations accordingly.

On November 10, 2005, Congress amended the dairy livestock provisions in the OFPA to provide a more lenient conversion process for dairy animals. Specifically, the amended OFPA language regarding dairy livestock transition reads that ''Crops and forage from land included in the organic system plan of a dairy farm that is in the third year of organic management to be consumed by the dairy animals of the farm during the 12-month period immediately prior to the sale of organic milk and milk products'' (7 U.S.C. 6509(e)(2)(B)).

Therefore, taking the court judgment and order in consideration with the OFPA amendment for dairy livestock transition, this proposed rule revises 7 CFR 205.236(a)(2) to read: ''Milk or milk products must be from animals that have been under continuous organic management beginning no later than 1 year prior to the production of the milk or milk products that are to be sold, labeled, or represented as organic, *Except,* That, crops and forage from land included in the organic system plan of a dairy farm that is in the third year of organic management may be consumed by the dairy animals of the farm during the 12-month period immediately prior to the sale of organic milk and milk products.'' Subparagraph § 205.236(a)(2)(iii) is renumbered (a)(2)(i). This paragraph was not addressed by the Harvey final judgment and order or by the subsequent statutory amendments, and thus the application of this subparagraph to dairy herd conversion remains unchanged.

Nonorganically produced agricultural products allowed as ingredients in or on processed products labeled as organic or made with organic ingredients (section 205.606).

In the final judgment, the district court ordered the Secretary to declare that 7 CFR 205.606 shall not be interpreted to create a blanket exemption to the National List requirements specified in 7 U.S.C. 6517, permitting the use of nonorganic agricultural products in or on processed organic products when their organic form is not commercially available. The court further ordered the Secretary to declare that 7 CFR 205.606 shall be interpreted to permit *only* the use of a nonorganically produced agricultural product that has been listed in § 205.606 pursuant to National List procedures, and when a certifying agent has determined that the organic form of the agricultural product is not commercially available.

Consistent with the court's final judgment, this proposed rule revises 7 CFR 205.606 to clarify that the section shall be interpreted to permit the use of a nonorganically produced agricultural product only when the product has been listed in § 205.606 pursuant to National List procedures, and when an accredited certifying agent has determined that the organic form of the agricultural product is not commercially available. The revised section now reads: ''Only the following nonorganically produced agricultural products may be used as ingredients in or on processed products labeled as 'organic' or 'made with organic (specified ingredients or food group(s)),' only in accordance with any restrictions specified in this section, and only when the product is not commercially available in organic form: cornstarch (native); gums—water extracted only (arabic, guar, locust bean, carob bean); kelp—for use only as a thickener and dietary supplement; lecithin—unbleached; pectin (high-methoxy).''

III. Related Documents

Documents related to this proposed rule include the OFPA, as amended, (7 U.S.C. 6501 *et seq.*), its implementing regulations (7 CFR part 205), and a **Federal Register** notice publishing the final judgment and order in the case of *Harvey* v. *Johanns* (70 FR 38090).

A. Executive Order 12866

This action has been determined non significant for purposes of Executive Order 12866, and therefore, does not have to be reviewed by the Office of Management and Budget.

B. Executive Order 12988

Executive Order 12988 instructs each executive agency to adhere to certain requirements in the development of new and revised regulations in order to avoid unduly burdening the court system. This proposed rule is not intended to have a retroactive effect.

States and local jurisdictions are preempted under section 2115 of the OFPA (7 U.S.C. 6514) from creating programs of accreditation for private persons or State officials who want to become certifying agents of organic farms or handling operations. A

governing State official would have to apply to USDA to be accredited as a certifying agent, as described in section 2115(b) of the OFPA (7 U.S.C. 6514(b)). States are also preempted under section 2104 through 2108 of the OFPA (7 U.S.C. 6503 through 6507) from creating certification programs to certify organic farms or handling operations unless the State programs have been submitted to, and approved by, the Secretary as meeting the requirements of the OFPA.

Pursuant to section 2108(b)(2) of the OFPA (7 U.S.C. 6507(b)(2)), a State organic certification program may contain additional requirements for the production and handling of organically produced agricultural products that are produced in the State and for the certification of organic farm and handling operations located within the State under certain circumstances. Such additional requirements must: (a) Further the purposes of the OFPA, (b) not be inconsistent with the OFPA, (c) not be discriminatory toward agricultural commodities organically produced in other States, and (d) not be effective until approved by the Secretary.

Pursuant to section 2120(f) of the OFPA (7 U.S.C. 6519(f)), this proposed rule would not alter the authority of the Secretary under the Federal Meat Inspection Act (21 U.S.C. 601 *et seq.*), the Poultry Products Inspections Act (21 U.S.C. 451 *et seq.*), or the Egg Products Inspection Act (21 U.S.C. 1031 *et seq.*), concerning meat, poultry, and egg products, nor any of the authorities of the Secretary of Health and Human Services under the Federal Food, Drug and Cosmetic Act (21 U.S.C. 301 *et seq.*), nor the authority of the Administrator of the Environmental Protection Agency (EPA) under the Federal Insecticide, Fungicide and Rodenticide Act (7 U.S.C. 136 *et seq.*).

Section 2121 of the OFPA (7 U.S.C. 6520) provides for the Secretary to establish an expedited administrative appeals procedure under which persons may appeal an action of the Secretary, the applicable governing State official, or a certifying agent under this title that adversely affects such person or is inconsistent with the organic certification program established under this title. The OFPA also provides that the U.S. District Court for the district in which a person is located has jurisdiction to review the Secretary's decision.

C. Regulatory Flexibility Act and Paperwork Reduction Act

The Regulatory Flexibility Act (RFA) (5 U.S.C. 601 *et seq.*) requires agencies to consider the economic impact of each rule on small entities and evaluate alternatives that would accomplish the objectives of the rule without unduly burdening small entities or erecting barriers that would restrict their ability to compete in the market. The purpose is to fit regulatory actions to the scale of businesses subject to the action. Section 605 of the RFA allows an agency to certify a rule, in lieu of preparing an analysis, if the rulemaking is not expected to have a significant economic impact on a substantial number of small entities.

Pursuant to the requirements set forth in the RFA, the Agricultural Marketing Service (AMS) performed an economic impact analysis on small entities in the final rule published in the **Federal Register** on December 21, 2000 (65 FR 80548). AMS has also considered the economic impact of this action on small entities and has determined that this proposed rule would have an impact on a substantial number of small entities.

Small agricultural service firms, which include producers, handlers, and accredited certifying agents, have been defined by the Small Business Administration (SBA) (13 CFR 121.201) as those having annual receipts of less than $6,500,000 and small agricultural producers are defined as those having annual receipts of less than $750,000. This proposed rule would have an impact on a substantial number of small entities.

The U.S. organic industry at the end of 2001 included nearly 6,949 certified organic crop and livestock operations. These operations reported certified acreage totaling just over 2 million acres of organic farm production. Data on the numbers of certified organic handling operations (any operation that transforms raw product into processed products using organic ingredients) were not available at the time of survey in 2001; but they were estimated to be in the thousands. Based on 2003 data, certified organic acreage had increased to 2.2 million acres. By the end of 2004, the number of certified organic crop, livestock, and handling operations totaled nearly 11,400 operations, based on reports by certifying agents to NOP as part of their annual reporting requirements. AMS believes that most of these entities would be considered small entities under the criteria established by the SBA.

U.S. sales of organic food and beverages have grown from $1 billion in 1990 to an estimated $12.2 billion in 2004. Organic food sales are projected to reach nearly $15 billion for 2005. The organic industry is viewed as the fastest growing sector of agriculture, representing 2 percent of overall food and beverage sales. Since 1990, organic retail sales have historically demonstrated a growth rate between 20 to 24 percent each year. This growth rate is projected to decline and fall to a rate of 5 to 10 percent in the future.

In addition, USDA has accredited 96 certifying agents who have applied to USDA to be accredited in order to provide certification services to producers and handlers. A complete list of names and addresses of accredited certifying agents may be found on the AMS NOP Web site, at *http://www.ams.usda.gov/nop.* AMS believes that most of these entities would be considered small entities under the criteria established by the SBA.

Impact of Lawsuit and Congressional Amendment on Dairy

The loss of the 80–20 feed exception can be measured depending on various feed costs, for average farm sizes, and for the sector as a whole using 2003 estimates of the number of certified dairy livestock in the United States—the latest year for which numbers are available.[1] Generally, for organic dairy operations, feed and labor are the most significant cost components, comprising upwards of 50 percent of the total variable costs of the operation.[2] Organic feed is significantly more expensive than conventional feed, and various quotes for organic feed run as high as double the cost of conventional or nonorganic feed rations. According to one study, higher feed cost was the largest and most important difference between organic and nonorganic dairy production, with the additional expense of feeding organic dairy costs being 54 percent of the price differential received for organic milk.[3] In this study, for a 48-cow organic herd, purchased feed cost $1,003 per cow, or $298 per cow more than for a conventional dairy operation. For the entire year, the average farm spent approximately $49,000 for purchased organic feed for the 48-cow herd in this study.

A rough estimate of the loss of the 80–20 feed exception can be determined using this study's farm cost numbers. Using the estimated per-cow feed numbers, if a dairy farmer had to switch

[1] Greene, Catherine. Certified organic livestock, 2003, numbers were obtained from the author on permission; forthcoming from the Economic Research Service (ERS), U.S. Department of Agriculture.

[2] Dalton, Timothy J., Lisa A. Bragg, Rick Kersbergen, Robert Parson, Glenn Rogers, Dennis Kauppila, Qingbin Wang. ''Cost and Returns to Organic Dairy Farming in Maine and Vermont for 2004,'' University of Maine Department of Resource Economics and Policy Staff Paper #555, November 23, 2005.

[3] Ibid.

from using 80 percent organic feed to 100 percent organic feed, and purchased all of the organic feed, the additional cost to the dairy farmer is $27 per month, or about 2.7 percent higher than using the 80–20 feed exception.

For the sector, based on Economic Research Service's (ERS) latest estimate of approximately 74,435 certified dairy cows in 2003, the loss of the 80–20 feed provision using the above cost estimates would amount to around $2 million. But this assumes that: (1) *All* of the dairy cows in the sector are converted to organic in the same year; (2) *all* farm operators use the 80–20 feed provision in that same year; and (3) *all* organic feed was purchased. Because it is unlikely that all operations exercise these options, the $2 million estimated for the sector likely overstates the total cost of the loss of the 80–20 feed provision. This cost estimate more likely represents an upper bound estimate based on this farm study's feed cost estimate, as if all dairy cows were converted to organic at a single point in time under the above assumptions.

TABLE 1.—COST OF LOSING 80–20 FEED PROVISION

[Based on Vermont-Maine Dairy Study Cost Estimates]

Organic feed per cow	$1,003 per year or $84 per month.
Nonorganic feed per cow	$795 per year or $66 per month.
9 months: 20% nonorganic feed cost	(0.2)*($66)*(9) = $119.
80% organic feed costs	(0.8)*($84)*(9) = $605.
3 months: 100% organic feed	(1.0)*($84)*(3) = $252.
Total Feed Using 80–20	$976
12 months using organic feed only	12 months*$84/cow = $1,003.
Difference (loss) of 80–20, 48-cow herd	12 mo*$27/cow loss = $1,296.

Instead, an alternative estimate could be derived for a growing industry that *is adding* new dairy cows to the industry. According to ERS, in 2000, there were just over 38,000 certified dairy livestock, increasing to nearly 49,000 by 2001, and 67,000 in 2002. With reports of rising milk prices and shortages in the U.S. organic dairy market in 2005, continued growth in organic dairy livestock numbers could be expected.

Therefore, an alternative estimate of the loss is to calculate the number of dairy cows added to the sector each year and assume they were all added to the sector by being converted using the 80–20 feed transition provision. Using the ERS numbers above, between 2000 and 2001, 11,000 certified dairy cows were added. Another 18,000 cows were added by 2002, and 7,435 in 2003. On average, 12,145 dairy cows were added each year since 2000. Based on these numbers from ERS and the additional cost of $27 per cow from the study above, using the 80–20 feed provision, the loss of the 80–20 provision would have cost dairy farmers approximately $327,915 per year, or nearly $1 million over the 3-year period.

Different estimates were obtained from discussions with Western state industry experts in dairy feed and nutrition, and budgets developed by certifying agents who work with certified dairy operations.[4] These estimates resulted in higher costs due to the loss of the 80–20 feed provision, of as much as $416 per cow annually, or assuming an addition of approximately 12,000 cows per year to the sector, a loss of nearly $5 million per year to the sector.

Depending on location, climate, size, and purchased feed, costs may vary considerably. The west, for example, tends to be a feed-deficit region where farmers purchase more feed and rely less on feed from on-farm or nearby sources. The farther the distance a farmer has to go to obtain feed, the more costly the feed will be, all other things being equal, making it likely that costs would vary by region or climate.

With higher milk prices, more farmers might be attracted to enter organic dairy farming. In the short run, this would add to pressure (due to more competition) on feed supplies. With the loss of the 80–20 feed provision, this could drive up the cost of feed; in the short run, therefore, there could be additional upward pressure on these cost estimates.

Regardless, these additional costs would have to be absorbed somewhere. They must either be passed forward to consumers in the form of higher fluid milk and dairy product prices—already at high premiums relative to conventional dairy product prices—or they would have to be absorbed by farmers.

However, Congress did amend OFPA for transitioning dairy farmers, by permitting such dairy farmers to graze dairy livestock on land being converted to organic production during its 3rd year of transition. Thus, the loss of the 80–20 feed exception is mitigated in part by the action that Congress took. In effect, a farm transitioning its dairy cows to organic could put its cows on that farm's pasture being converted to organic and the milk from those cows would be organic at the same time as crops being harvested from that land—at the end of the third year that the land completed organic management.

Contrary to many reports since Congress amended the OFPA, this does not mean that dairy cows can be fed prohibited substances or genetically modified organisms (GMOs). The land on which the dairy cows are being managed could not have any prohibited substances applied to it for 3 years prior to crops being harvested from that land; if the dairy cow grazes on that land, she is not consuming ''conventional'' feed. At the end of the 12 months of organic management on that land, the milk from that dairy cow is analogous to the crops harvested from that same field at the end of that third year—both are eligible to be sold as organic, provided all other requirements of the regulations are met.

Congress leveled the playing field for dairy farmers when they amended OFPA in this area by removing any penalties that dairy farmers faced with the so-called ''4th year''—''*i.e.*, the additional transition year that dairy cows underwent due to lactation cycles. And Congress did not change the basic requirement of OFPA. Dairy cows must be organically managed for at least 12 months; after these 12 months of organic management, only her *milk and milk products* may be represented as organic.

The status of the dairy *cow* is a different story. The dairy cow is only organic if she was raised organically from the last third of the mother's gestation. When a dairy cow is slaughtered, she cannot be sold as

[4] Information provided in conversations with Pacific Nutrition-Consulting (PNC) based on USDA–ACA budgets for estimating the cost of the transition year for dairy farmers using the 80–20 feed provision.

organic slaughter stock unless she was raised organically from the last third of the mother's gestation, the same as other slaughter livestock (except poultry, which must be raised organically beginning with the second day of life). That remains the same in the NOP regulation.

In providing the transition language, entry in organic dairying may become easier, which could ease current milk shortages in the organic milk market at retail. Certainly it should help smaller dairy farmers entering the organic industry who may be faced with having to purchase higher priced organic feed, by allowing them to graze dairy livestock on their land that is being transitioned to organic certification.

With respect to alternatives to this proposed rule, this proposed rule merely implements language which Congress has enacted and complies with the court's final judgment and order.

AMS is committed to compliance with the Government Paperwork Elimination Act (GPEA), which requires Government agencies in general to provide the public the option of submitting information or transacting business electronically to the maximum extent possible.

USDA has not identified any relevant Federal rules that duplicate, overlap, or conflict with this rule.

No additional collection or recordkeeping requirements are imposed on the public by this proposed rule. Accordingly, OMB clearance is not required by § 350(h) of the Paperwork Reduction Act of 1995, 44 U.S.C. 3501, *et seq.*, or OMB's implementing regulation at 5 CFR part 1320.

D. General Notice of Public Rulemaking

This proposed rule reflects amendments made by Congress to the OFPA that were passed on November 10, 2005 and a court final order that requires USDA to publish final revisions to the NOP regulations within 360 days of the court order, by June 4, 2006. Accordingly, AMS believes that a 15-day period for interested persons to comment on this rule is appropriate.

List of Subjects in 7 CFR Part 205

Administrative practice and procedure, Agriculture, Animals, Archives and records, Imports, Labeling, Organically produced products, Plants, Reporting and recordkeeping requirements, Seals and insignia, Soil conservation.

For the reasons set forth in the preamble, 7 CFR part 205, is proposed to be amended as follows:

PART 205—NATIONAL ORGANIC PROGRAM

The authority citation for 7 CFR part 205 continues to read as follows:

1. **Authority:** 7 U.S.C. 6501–6522.

2. Section 205.236(a)(2) is revised to read as follows:

§ 205.236 Origin of livestock.

(a) * * *

(2) *Dairy animals.* Milk or milk products must be from animals that have been under continuous organic management beginning no later than 1 year prior to the production of the milk or milk products that are to be sold, labeled, or represented as organic, *Except,* That, crops and forage from land included in the organic system plan of a dairy farm that is in the third year of organic management may be consumed by the dairy animals of the farm during the 12-month period immediately prior to the sale of organic milk and milk products;

(i) Once an entire, distinct herd has been converted to organic production, all dairy animals shall be under organic management from the last third of gestation.

(ii) [Reserved]

* * * * *

3. Section 205.606 is revised to read as follows:

§ 205.606 Nonorganically produced agricultural products allowed as ingredients in or on processed products labeled as organic or made with organic ingredients.

Only the following nonorganically produced agricultural products may be used as ingredients in or on processed products labeled as ''organic'' or ''made with organic (specified ingredients or food group(s)),'' only in accordance with any restrictions specified in this section, and only when the product is not commercially available in organic form.

(a) Cornstarch (native)

(b) Gums—water extracted only (arabic, guar, locust bean, carob bean)

(c) Kelp—for use only as a thickener and dietary supplement

(d) Lecithin—unbleached

(e) Pectin (high-methoxy)

Dated: April 24, 2006.

Lloyd C. Day,

Administrator, Agricultural Marketing Service.

[FR Doc. 06–4006 Filed 4–25–06; 10:52 am]

BILLING CODE 3410–02–P

DEPARTMENT OF EDUCATION

34 CFR Part 76

RIN 1890–AA13

State-Administered Programs

AGENCY: Department of Education.

ACTION: Notice of proposed rulemaking.

SUMMARY: The Secretary proposes to amend the regulations in 34 CFR part 76 governing State reporting requirements. States are required to submit their performance reports, financial reports, and any other required reports, in the manner prescribed by the Secretary, including through electronic submission, if the Secretary has obtained approval from the Office of Management and Budget (OMB) under the Paperwork Reduction Act of 1995 (PRA). The amendments proposed in this notice would provide that: (1) Failure to submit these reports in the manner prescribed by the Secretary constitutes a failure, under section 454 of the General Education Provisions Act, 20 U.S.C. 1234c, to comply substantially with a requirement of law applicable to the funds made available under the program for which the reports are submitted; and (2) if the Secretary chooses to require submission of information electronically, the Secretary may establish a transition period during which a State would not be required to submit such information electronically in the format prescribed by the Secretary, if the State meets certain requirements. The Secretary proposes these changes to the regulations in 34 CFR part 76 to highlight that the U.S. Department of Education (Department) may require, through the PRA clearance process, that States report certain information electronically; and to establish that the Department may take administrative action against a State for failure to submit reports in the manner prescribed by the Secretary. The proposed changes will facilitate the use of the Department's electronic ED*Facts* data management system (ED*Facts*) (Approved under OMB Control No. 1880–0541) for electronic submission of certain reports and provide the Department with more timely and accessible data for accountability and decision-making. The Department's goal in requiring electronic submission of information is to reduce State reporting burden significantly and to streamline dozens of data collections currently required by the Department.

DATES: We must receive your comments on or before May 30, 2006.

ADDRESSES: Address all comments about these proposed regulations to Bonny

Long, U.S. Department of Education, 400 Maryland Avenue, SW., room 7C110, Washington, DC 20202. If you prefer to send your comments through the Internet, you may address them to us at the U.S. Government Web site: *http://www.regulations.gov* or you may send your Internet comments to us at the following address: *StateReporting@ed.gov.*

You must include the term ''State Reporting/EDFacts Regulation'' in the subject line of your electronic message.

FOR FURTHER INFORMATION CONTACT: Bonny Long. Telephone: (202) 401–0325 or via Internet: *Bonny.Long@ed.gov.*

If you use a telecommunications device for the deaf (TDD), you may call the Federal Relay Service (FRS) at 1–800–877–8339.

Individuals with disabilities may obtain this document in an alternative format (e.g., Braille, large print, audiotape, or computer diskette) on request to the contact person listed under **FOR FURTHER INFORMATION CONTACT**.

SUPPLEMENTARY INFORMATION:

Invitation to Comment

We invite you to submit comments regarding these proposed regulations. To ensure that your comments have maximum effect in developing the final regulations, we urge you to identify clearly the specific section or sections of the proposed regulations that each of your comments addresses and to arrange your comments in the same order as the proposed regulations. In particular, we invite specific comments on the Department's approach to implementing these regulations in regard to the following issues:

- Whether the proposed two-year transition period discussed in both the background section of this preamble and in § 76.720(c)(3) is sufficient; and
- Whether the Department's intent to require States to submit data electronically through ED*Facts* beginning with the 2006–07 school year, discussed in the background section of this preamble, is feasible and the effects of this action for States.

We also invite you to assist us in complying with the specific requirements of Executive Order 12866 and its overall requirement of reducing regulatory burden that might result from these proposed regulations. Please let us know of any further opportunities we should provide to reduce potential costs or increase potential benefits while preserving the effective and efficient administration of the Department's State-administered programs.

During and after the comment period, you may inspect all public comments about these proposed regulations in room 7C110, 400 Maryland Avenue, SW., Washington, DC, between the hours of 9 a.m. and 4 p.m., Eastern time, Monday through Friday of each week except Federal holidays.

Assistance to Individuals With Disabilities in Reviewing the Rulemaking Record

On request, we will supply an appropriate aid, such as a reader or print magnifier, to an individual with a disability who needs assistance to review the comments or other documents in the public rulemaking record for these proposed regulations. If you want to schedule an appointment for this type of aid, please contact the person listed under **FOR FURTHER INFORMATION CONTACT**.

Background

Complete, accurate, and reliable data are essential for effective decision-making and for implementing the requirements of the Nation's education laws. The Department's ability to collect, store, and manage education data efficiently through electronic means allows for easier submission by States and reduces duplication of collections and burdens on States. It also facilitates the efficient use of data for analysis by program officials and other interested parties. Implementation of the No Child Left Behind Act of 2001 (Pub. L. 107–110) (NCLB) requires that educators have accurate and reliable data to assess the Nation's progress in reaching the goal of ensuring that every child achieves high academic standards. These data help educators know where they need to focus their attention in order to improve the academic achievement of all students.

In 2003, the Department launched the Performance-Based Data Management Initiative (PBDMI) to design an elementary and secondary education data collection system that would: (1) Increase the analytical capabilities of Federal, State, and local governments in their efforts to improve outcomes for students; (2) improve the quality, timeliness, and accessibility of data; and (3) reduce State reporting burden by streamlining data collections and eliminating duplication in reporting. Through this initiative, the Department developed the Education Data Exchange Network (EDEN), a central repository and electronic data collection system for over 140 common data elements on student achievement, school characteristics, demographics, and program financial information. States have been submitting data to EDEN voluntarily for the past two years. The Department is now increasing the EDEN capabilities to include, in addition to the Web-based interface that allows States to submit data electronically into EDEN, a capability for States, Department staff, and, eventually, the public, to query the database and independently analyze the data, subject to all applicable privacy protections for disclosing statistical data. To signal the increased capabilities of the system, the Department is renaming EDEN and the expanded Web-based interface ''ED*Facts*.'' Accordingly, unless otherwise noted, for purposes of this preamble, the expanded system will be referred to as ''ED*Facts*.''

To date, submission of data through ED*Facts* has been voluntary and, therefore, regardless of whether States have reported data through ED*Facts,* they have been required to continue reporting data through dozens of existing data collections required by Congress and administered by the Department. These collections frequently request duplicative data, including, in particular, data on student achievement and school demographics. The Department has designed ED*Facts* to obtain the most commonly collected data elements so that States need only report these data once, through a centralized, electronic process. As ED*Facts* is implemented completely, the Department will retire dozens of separate data collections, either in full or in part, and reduce State reporting burden significantly.

Nearly every State has submitted electronically some portion of the data that it eventually will be required to submit to the Department through ED*Facts*. However, ED*Facts* will only reach its full potential in reducing duplicative State reporting burden and increasing the ability of the Department and States to analyze and improve student achievement if all States provide their data through the system.

Beginning with the data from the 2006–07 school year, the Department intends to obtain approval, pursuant to the PRA, of an information collection request that would require States to submit electronically through ED*Facts* the program and demographic information that States currently are required to report under separate and overlapping collections. This data collection request will eliminate the need for States to submit reports under current separate and overlapping collection instruments because the Department intends to discontinue any existing data collections that require submission of data that will be subject to the ED*Facts* information collection request.

ED*Facts* has the capability to collect data at the State, district, and school levels and, for the 2006–2007 school year the Department plans to require States to submit electronically those data, including district and school level data, that States currently are required to provide under existing data collections. The Department will continue to work with States to collect the full range of data that can be collected through ED*Facts*, including data that are not currently subject to one of the Department's OMB-approved information collection requests if eventually approved through future PRA information collection requests. We plan to consolidate as many information requests in ED*Facts* as possible because it provides the best opportunity for efficient and effective data collection on key aspects of student achievement and program performance. In this regard, States will have the option to provide, through ED*Facts*, additional district- and school-level data that they are not currently required to provide under existing data collections. For example, when preparing other documents to submit to the Department (e.g., a performance report), a State and its subgrantees would be able to simply reference school- and district-level data already submitted through ED*Facts* rather than undertake the burden of reproducing the same data in multiple documents. Once data are submitted to ED*Facts*, ED would be able to prepopulate collection forms so that States would only have to provide the data that does not overlap with the ED*Facts* data. In general, the amount of burden reduction available to States would be correlated directly with the amount of data they would provide through ED*Facts*. If the voluntary submission of district- and school-level data to ED*Facts* proves successful, the Department will consider expanding ED*Facts* required reporting to cover those more detailed data elements. Accordingly, the Department welcomes comments on a State's capacity for, and interest in, electronic reporting of district- and school-level data through ED*Facts* as an efficient means to centralize reporting and reduce State paperwork burden.

Two ways the Department will reduce State burden and reporting duplication in connection with ED*Facts* in the short term are as follows:

(1) The Department plans to eliminate existing collections that completely overlap with data required to be submitted through ED*Facts*. For reporting 2005–06 school year data, the Department is piloting this approach with four data collections for Individuals with Disabilities Education Act (IDEA) programs. Under this pilot, States that submit specified ED*Facts* data files that meet current program reporting standards will be relieved of submitting those data through other means.

(2) For existing collections that partially overlap with data required to be submitted through ED*Facts*, the Department will pre-populate those collections with the data that States submitted through ED*Facts* so that States need not submit those data more than once. The Department is piloting this approach with the Consolidated State Performance Report (CSPR) (Approved under OMB Collection No. 1810–0614), required under section 9303 of the Elementary and Secondary Education Act of 1965, as amended by NCLB, for the 2004–05 school year data. Under this pilot, States will access a CSPR Web page that is pre-populated with the ED*Facts* data they already have submitted, decreasing significantly the number of CSPR questions they must answer.

Both the Department and each State already have committed significant resources to the Department's data management initiative; the Department believes that requiring full participation in ED*Facts*, while eliminating, either completely or partially, the majority of the Department's existing annual elementary and secondary education data collections, is the only way to ensure that those investments deliver their intended benefits, including reducing State reporting burden.

As part of the Department's efforts to streamline its data collection processes and elevate the importance of State compliance with reporting requirements, the Department proposes to amend the regulations in 34 CFR part 76. As more fully discussed in the Significant Proposed Regulations section of this notice, the proposed regulations in §§ 76.720 and 76.722 would provide the Department with enforcement capabilities that are not available under the PRA alone. The proposed regulations emphasize the critical need for accurate data reporting for the Department's programs, including those authorized under ESEA, by making failure to report data under a program administered by the Secretary, in a manner prescribed by the Secretary, a failure to comply substantially with a requirement of law applicable to the funds made available under that program. This standard comes from section 454 of the General Education Provisions Act (20 U.S.C. 1234c) and gives the Secretary the authority to take administrative action against a recipient that does not comply with a program requirement.

Finally, in recognition of the fact that some States may not be able to submit data electronically in the manner prescribed by the Secretary, *e.g.*, through ED*Facts*, the Department proposes to amend 34 CFR 76.720 to provide the Secretary with discretion to establish a transition period of up to two years following the date a State otherwise would be required to report the data in the electronic format prescribed by the Secretary (*i.e.*, two years following the first reporting deadline established for the data collection through the PRA process). During this period, a State would not be required to submit reports in the electronic format prescribed by the Secretary if the State meets certain requirements. However, the Secretary may require the State to submit data in an alternative electronic format within the State's current capacity. This provision would permit those States that meet the requirements specified in proposed 34 CFR 76.720(c)(3)(i) through (iii) with a transition period, not to exceed two years following the reporting deadline for the data collection, to comply with any requirement to submit reports electronically in the manner prescribed by the Secretary. Regardless of whether a State has been authorized a transition period, the Secretary appreciates that from time to time a State may have temporary technical circumstances that would prevent it from making timely submission of data to ED*Facts*. Such a situation would not trigger the Secretary taking enforcement action against a State.

Significant Proposed Regulations

Section 76.720 State Reporting Requirements

Current § 76.720(a) states that § 76.720 applies to State reports required under 34 CFR 80.40 (Monitoring and reporting of program performance) and 34 CFR 80.41 (Financial reporting).

Proposed § 76.720(a) would clarify that § 76.720 applies to reports required under 34 CFR 80.40 and 34 CFR 80.41, as well as other State reports that the Secretary requires under program statutes or regulations if the reports are approved by OMB under the PRA. Pursuant to the PRA, the Department must give interested parties an opportunity to comment on, and must obtain OMB approval for, any data collection that requests data from more than nine entities, unless the collection meets one of the narrow exceptions to the PRA.

Proposed § 76.720(b)(1) and (2) would not substantively change current § 76.720(b) and (c), which specify the frequency with which States must submit reports to the Secretary.

Proposed § 76.720(c)(1) would be added to § 76.720 to clarify that States must submit any reports required under § 76.720 in the manner prescribed by the Secretary, including, if so prescribed, through electronic submission. Proposed § 76.720(c)(1) is necessary because it states in very clear terms that States must comply with the Secretary's requirements concerning the manner in which reports are submitted to the Department. The Secretary establishes submission requirements for Departmental data collection requests through the PRA clearance process. The language in proposed § 76.720(c)(1), therefore, essentially states in a single regulatory provision that States must comply with requirements established through the PRA clearance process.

Proposed § 76.720(c)(2) would be added to § 76.720 to provide that a State's failure to submit reports in the manner prescribed by the Secretary (such as electronic submission) constitutes a failure to comply substantially with a requirement of law applicable to the funds made available under the program for which the reports are submitted. Under section 454 of the General Education Provisions Act, 20 U.S.C. 1234c, if the Secretary has reason to believe that any recipient of funds under an applicable program is failing to comply substantially with any requirement of law applicable to those funds, the Secretary may take administrative action to compel compliance. Proposed § 76.720(c)(2) is necessary because it establishes that reporting requirements, such as electronic submission of reports, are substantial requirements of law such that failure to comply with these requirements would constitute a violation of section 454 of the General Education Provisions Act (20 U.S.C. 1234c). The Department proposes § 76.720(c)(2) because failure of a recipient to comply with the Department's reporting requirements, including submitting reports electronically, harms the Federal interest in establishing what the Department deems is an efficient and effective means of obtaining accurate, reliable, and valid information on the performance of the Department's programs and the success of States in meeting their goals under such laws as NCLB. The Federal interest would be harmed because States would not be using a system that was specifically designed to reduce their burden and the Department would not be able to collect and use data as efficiently and easily. In addition, the data would not be in the form and of the quality necessary for the Department to assess program effectiveness. Moreover, States that do not comply with the Department's submission requirements would be using funds to submit reports that do not meet the Department's needs for accurate, reliable, and valid data.

Proposed § 76.720(c)(3) would be added to § 76.720 to address difficulties that States may have in reporting data electronically in a manner prescribed by the Secretary on the date States otherwise would be required to report the data electronically. Proposed § 76.720(c)(3) would provide that the Secretary has the discretion to establish a transition period of up to two years following the date by which a State otherwise would be required to report the data in the electronic manner prescribed by the Secretary. During this transition period, a State would not be required to comply with the electronic submission requirement as prescribed by the Secretary, such as the requirement to submit electronic reports through ED*Facts*, if the State submits the following to the Secretary: (a) Evidence satisfactory to the Secretary that the State is unable to comply with the electronic submission requirement specified by the Secretary in the data collection instrument on the first date the State otherwise would be required to report the data electronically; (b) any information requested in the report through an alternative means that is deemed acceptable to the Secretary, which may require submission in an alternative electronic format that is better suited to a State's current capacity; and (c) a plan showing how the State would come into compliance with the electronic submission and data quality requirements specified in the data collection instrument no later than two years following the date by which the State otherwise would be required to submit the data in the electronic manner prescribed by the Secretary.

The following example describes how this regulatory provision would work.

Example: The Department obtains approval for a new data collection instrument through the PRA process that would, for the first time, require States to submit data in an electronic format prescribed by the Secretary. The first date that States would be required to submit reports in this electronic format would be November 1, 2007. A State does not have the capacity to submit reports in the electronic format prescribed by the Secretary by November 1, 2007. The State would submit to the Secretary the following: (1) A request for a transition period, that includes evidence that the State is not able to comply with the electronic submission requirements; (2) the information requested in the report in an alternative means that is acceptable to the Secretary; and (3) a plan explaining the steps the State will take to submit the report in the electronic format prescribed by the Secretary no later than November 1, 2009.

The Department proposes § 76.720(c)(3) because, while it believes requiring electronic submission of reports ultimately will help reduce State reporting burden and streamline the Department's data management system, it recognizes that, at this time, States have varying capabilities to report information through electronic means.

Therefore, with respect to ED*Facts,* the Department plans to use the discretion established under proposed § 76.720(c)(3) to allow States that demonstrate that they do not have the capability to submit reports as specified through ED*Facts,* a period of up to two years following the dates the States otherwise would be required to report data through ED*Facts* (*i.e.*, until the reporting deadlines established for the 2008–09 school year data through the PRA process) to phase in their compliance with the reporting requirements. For those States, the Department plans to accept the required data through alternative means approved by the Department, which may include alternative electronic submissions, if those States provide the Department with, and the Department approves, a plan to submit the required reports through ED*Facts* no later than the reporting deadlines established for the 2008–09 school year reports through the PRA process.

With respect to proposed § 76.720(c)(3), the Department is particularly interested in receiving comment on: (a) Whether the proposed two-year transition period to phase in the electronic submission requirements prescribed by the Secretary for ED*Facts* is a sufficient period of time for States that cannot comply with these requirements to come into compliance; and (b) what kind of alternative electronic collection format would most help States that cannot comply with the requirement to submit reports electronically through ED*Facts.*

Section 76.722 Subgrantee Reporting Requirements

Current § 76.722 allows States to require subgrantees to furnish reports to the States that the States need to carry

out their obligations under the program for which the subgrantees receive funds.

Proposed § 76.722 would add language to § 76.722 to allow States to require subgrantees to submit, in the format and manner designated by the States, any reports that the States need to comply with the requirements under proposed § 76.720 and to carry out other responsibilities under the program. The proposed changes to current § 76.722 are intended to make it easier for States to comply with the requirements under proposed § 76.720 that the States submit reports to the Department in the manner prescribed by the Secretary.

Executive Order 12866

1. Potential Costs and Benefits

The Department has determined that these proposed regulations are a significant regulatory action under Executive Order 12866 and OMB has reviewed them. In accordance with the Executive Order, the Department has also assessed the potential costs and benefits of this regulatory action. The potential costs associated with the proposed regulations are those resulting from statutory requirements and those we have determined to be necessary for administering the Department's State-administered programs effectively and efficiently. These regulations are generally not expected to require undue additional State resources because they do not require States to report more data than they currently are required to report to the Department. However, a potential new cost related to these regulations is the acquisition of the necessary technology for those States that do not currently have the capability to report information through electronic means. The Department expects that most States currently have this technology and that this cost would apply to very few (if any) States. For those States to which the cost is applicable, the cost is likely to be minimal.

The potential benefits of these proposed regulations have been identified above, but briefly include: more timely and accessible data for accountability and decision-making; reduced State reporting burden; and, ultimately, improved implementation of the requirements of the Nation's education laws.

In assessing the potential costs and benefits of this regulatory action, we have determined that the benefits would justify the costs. The potential costs and benefits of the Department's information collection requests are identified in notices published in accordance with the PRA.

2. Clarity of the Regulations

Executive Order 12866 and the Presidential memorandum on ''Plain Language in Government Writing'' require each agency to write regulations that are easy to understand.

The Secretary invites comments on how to make these proposed regulations easier to understand, including answers to questions such as the following:

- Are the requirements in the proposed regulations clearly stated?
- Do the proposed regulations contain technical terms or other wording that interferes with their clarity?
- Does the format of the proposed regulations (grouping and order of sections, use of headings, paragraphing, etc.) aid or reduce their clarity?
- Could the description of the proposed regulations in the **SUPPLEMENTARY INFORMATION** section of this preamble be more helpful in making the proposed regulations easier to understand? If so, how?
- What else could we do to make the proposed regulations easier to understand?

Send any comments that concern how the Department could make these proposed regulations easier to understand to the person listed in the **ADDRESSES** section of the preamble.

Regulatory Flexibility Act Certification

The Secretary certifies that these proposed regulations would not have a significant economic impact on a substantial number of small entities. Because the regulation would affect only States and State agencies, the regulations would not have an impact on small entities.

Paperwork Reduction Act of 1995

These proposed regulations do not contain any new information collection requirements.

Intergovernmental Review

These proposed regulations affect State-administered programs of the Department that are subject to Executive Order 12372 and the regulations in 34 CFR part 79. One of the objectives of the Executive Order is to foster an intergovernmental partnership and to strengthen federalism. The Executive order relies on processes developed by State and local governments for coordination and review of proposed Federal financial assistance.

This document provides early notification of the Department's specific plans and actions for these programs.

Assessment of Educational Impact

The Secretary requests comments on whether these proposed regulations would require transmission of information that any other agency or authority of the United States gathers or makes available.

Electronic Access to This Document

You may view this document, as well as all other Department of Education documents published in the **Federal Register**, in text or Adobe Portable Document Format (PDF) on the Internet at this site: *http://www.ed.gov/news/fedregister.*

To use PDF you must have Adobe Acrobat Reader, which is available free at the site listed above. If you have questions about using PDF, call the U.S. Government Printing Office (GPO), toll free, at 1–888–293–6498; or in the Washington, DC area at (202) 512–1530.

Note: The official version of this document is the document published in the **Federal Register**. Free Internet access to the official edition of the **Federal Register** and the Code of Federal Regulations is available on GPO Access at: *http://www.gpoaccess.gov/nara/index.html.*

(Catalog of Federal Domestic Assistance Number does not apply.)

List of Subjects in 34 CFR Part 76

Elementary and secondary education, Reporting and recordkeeping requirements.

Dated: April 24, 2006.

Margaret Spellings,

Secretary of Education.

For the reasons discussed in the preamble, the Secretary proposes to amend part 76 of title 34 of the Code of Federal Regulations as follows:

PART 76—STATE-ADMINISTERED PROGRAMS

1. The authority citation for part 76 is revised to read as follows:

Authority: 20 U.S.C. 1221e–3 and 3474, unless otherwise noted.

2. Section 76.720 is revised to read as follows:

§ 76.720 State reporting requirements.

(a) This section applies to a State's reports required under 34 CFR 80.40 (Monitoring and reporting of program performance) and 34 CFR 80.41 (Financial reporting), and other reports required by the Secretary and approved by the Office of Management and Budget (OMB) under the Paperwork Reduction Act of 1995, 44 U.S.C. 3501–3520.

(b) A State must submit these reports annually unless—

(1) The Secretary allows less frequent reporting; or

(2) The Secretary requires a State to report more frequently than annually,

including reporting under 34 CFR 80.12 (Special grant or subgrant conditions for ''high-risk'' grantees) or 34 CFR 80.20 (Standards for financial management systems).

(c)(1) A State must submit these reports in the manner prescribed by the Secretary, including submitting any of these reports electronically and at the quality level specified in the data collection instrument.

(2) Failure by a State to submit reports in accordance with paragraph (c)(1) of this section constitutes a failure, under section 454 of the General Education Provisions Act, 20 U.S.C. 1234c, to comply substantially with a requirement of law applicable to the funds made available under that program.

(3) For reports that the Secretary requires to be submitted in an electronic manner, the Secretary may establish a transition period of up to two years following the date the State otherwise would be required to report the data in the electronic manner, during which time a State will not be required to comply with that specific electronic submission requirement, if the State submits to the Secretary—

(i) Evidence satisfactory to the Secretary that the State will not be able to comply with the electronic submission requirement specified by the Secretary in the data collection instrument on the first date the State otherwise would be required to report the data electronically;

(ii) Information requested in the report through an alternative means that is acceptable to the Secretary, such as through an alternative electronic means; and

(iii) A plan for submitting the reports in the required electronic manner and at the level of quality specified in the data collection instrument no later than the date two years after the first date the State otherwise would be required to report the data in the electronic manner prescribed by the Secretary.

(Authority: 20 U.S.C. 1221e–3, 1231a, and 3474)

3. Section 76.722 is revised to read as follows:

§ 76.722 Subgrantee reporting requirements.

A State may require a subgrantee to submit reports in a manner and format that assists the State in complying with the requirements under 34 CFR 76.720 and in carrying out other responsibilities under the program.

(Authority: 20 U.S.C. 1221e–3, 1231a, and 3474)

[FR Doc. E6–6355 Filed 4–26–06; 8:45 am]

BILLING CODE 4000–01–P

LIBRARY OF CONGRESS

Copyright Office

37 CFR Part 201

[Docket No. 2006–2]

Electronic Payment of Royalties

AGENCY: Copyright Office, Library of Congress.

ACTION: Notice of proposed rulemaking.

SUMMARY: The Copyright Office is proposing to amend its rules governing the submission of royalty fees to the Copyright Office to require such payments to be made by electronic funds transfer.

DATES: Written comments are due June 12, 2006. Reply comments are due July 11, 2006.

ADDRESSES: If hand delivered by a private party, an original and five copies of a comment or reply comment should be brought to Room LM–401 of the James Madison Memorial Building between 8:30 a.m. and 5 p.m. and the envelope should be addressed as follows: Office of the General Counsel, U.S. Copyright Office, James Madison Memorial Building, Room LM–401, 101 Independence Avenue, SE, Washington, DC 20559–6000. If delivered by a commercial courier, an original and five copies of a comment or reply comment must be delivered to the Congressional Courier Acceptance Site located at 2nd and D Streets, NE, between 8:30 a.m. and 4 p.m. The envelope should be addressed as follows: Office of the General Counsel, Room LM–403, James Madison Memorial Building, 101 Independence Avenue, SE, Washington, DC. If sent by mail (including overnight delivery using U.S. Postal Service Express Mail), an original and five copies of a comment or reply comment should be addressed to U.S. Copyright Office, Copyright GC/I&R, P.O. Box 70400, Southwest Station, Washington, DC 20024. Comments and reply comments may not be delivered by means of overnight delivery services such as Federal Express, United Parcel Service, etc., due to delays in processing receipt of such deliveries.

FOR FURTHER INFORMATION CONTACT: Tanya M. Sandros, Associate General Counsel, Copyright GC/I&R, P.O. Box 70400, Southwest Station, Washington, DC 20024. Telephone: (202) 707–8380. Telefax: (202) 707–8366.

SUPPLEMENTARY INFORMATION: Cable systems and satellite carriers that retransmit broadcast signals in accordance with the provisions governing the statutory licenses set forth in sections 111 and 119 of the Copyright Act, title 17 of the United States Code, respectively, are required to pay royalty fees to the Copyright Office. The Copyright Office also receives statutory fees from manufacturers and importers of digital audio recording devices and media who distribute these products in the United States. 17 U.S.C. chapter 10. Payments made under the cable and satellite carrier statutory licenses are remitted semiannually to the Copyright Office. Payments made under the Audio Home Recording Act of 1992 are made quarterly. The Copyright Office invests the royalties in United States Treasury securities pending distribution of these funds to those copyright owners who are entitled to receive a share of the fees.

The current Copyright Office regulations permit payment by three different methods: electronic funds transfer (''EFT''), certified or cashier's check, or money order. 37 CFR 201.11 (f), (g) and (h); 37 CFR 201.17 (i) and (j); and 37 CFR 201.28 (e). A mechanism for electronic payments was added in 1991, since it was thought that use of electronic payments would facilitate the process and lessen the administrative burden on the Office and on the filer. *See* 56 FR 29588 (June 28, 1991). An electronic payment option provides advantages to the payor and the Copyright Office as the agency responsible for the collection and distribution of the royalty fees. EFTs can be transmitted either as an Automated Clearing House (''ACH'') credit or a Fedwire (''Wire'') transaction depending upon how you arrange the transfer through your financial institution, or as an ACH debit by using the U. S. Department of the Treasury, Financial Management Service's web based remittance system, Pay.gov. In an ACH credit, your financial institution sends the remittance to the U. S. Treasury; whereas, in an ACH debit, you authorize the U. S. Treasury to take the funds out of the account at your financial institution.

Use of an electronic payment option offers specific advantages over payment via a check or money order. First, the remitters gain more time to transfer funds without fear of incurring interest assessments for late payments. In the case of a Wire transaction, the remitter may make a payment up until and including the due date (provided the financial institution is open that day and is still processing wire transfers), whereas an ACH transaction requires more time. It must be completed one or two banking days before the due date to ensure interest for late payments are not assessed. Second, electronic payments avoid the problems associated with lost

checks or delays in processing mail. Third, copyright owners, the ultimate recipients of the funds, accrue more interest on the funds because the monies go directly to the Department of the Treasury instead of being diverted to the Copyright Office for processing first. And finally, the Copyright Office benefits from the use of the electronic payment option because it lessens the Office's administrative workload by reducing paperwork and related administrative costs.

Currently, electronic funds transfers (EFTs) are used primarily by the larger cable systems and account for more than 95% of the royalty fees collected by the Office, whereas smaller systems tend to still send checks through the mail. As a result, the Office still receives a relatively high number of checks and other paper remittances for a disproportionately small amount of the royalty fees. Consequently, the Office is taking steps to increase further the number of payments made by EFTs by amending its rules to require remitters to use an EFT when making royalty fee payments.

In addition, the proposed rules would require that parties submit specific identifying and linking information as part of the EFT and/or as part of a ''remittance advice'' which will accompany the Statement(s) of Account and be faxed or emailed to the Licensing Division. This information would include: (1) the remitter's name and address; (2) the name of a contact person, telephone number and extension, and email address; (3) the actual or anticipated date that the EFT will be transmitted; (4) the type of royalty payment (*i.e.*, cable, satellite, or DART); (5) the total amount to be submitted via an EFT; (6) the total amount to be paid by year and period; (7) the number of statements of account that the EFT covers; (8) ID number(s) assigned by the Licensing Division; (9) the legal name of the owner for each Statement of Account; and (10) identification of the first community served (city and state) (for cable systems only). The information to be sent as part of the EFT and the information that needs to be included in the remittance advice will be detailed in circulars issued by the Copyright Office with respect to a specific type of EFT.

Frequently, with multiple filings and a single payment to cover them all, Office staff find that an overpayment or underpayment of the fee results after they have apportioned the fee to each statement based on the amount indicated therein. The ''remittance advice'' form helps avoid this type of problem by providing the Office with the information needed to match the EFT with the appropriate Statements of Account.

Currently, the Office requests similar identifying and linking information, but in many cases the information is wholly or partially omitted. In these cases, Office staff must tediously search through the bundles of statements of account submitted in an effort to match the correct statements with a payment. Considerable efforts have been made to contact remitters and advise them of these errors and omissions. Failure to provide this information creates delays in processing and undercuts the advantages gained by submitting an electronic payment. Because of the burden imposed upon the Office in attempting to process payments which lack sufficient identifying information, the proposed rules would allow the Office to return any EFT which fails to properly identify statements to which they relate and would require the remitter to resubmit the EFT correctly. Should this occur, the remitter will then be responsible for any assessed interest charge that accrues as a result of a late payment.

Also, the rules would require that ''remittance advice'' information be included with the statements of account in order to accurately identify what is submitted and how the fees are to be allocated among the statements.

The Office is further amending its regulations to include a waiver provision in cases where there may be circumstances which would make it virtually impossible for a remitter to use the electronic payment option or would work a financial or other hardship. Requests for a waiver must include a statement setting forth the reasons why the waiver should be granted and the statement must be signed by a duly authorized representative of the entity making the payment, certifying that the information provided is true and correct.

Regulatory Flexibility Act Statement

Although the Copyright Office, as a department of the Library of Congress and part of the Legislative Branch, it is not an ''agency'' subject to the Regulatory Flexibility Act, 5 U.S.C. 601–612, the Register of Copyrights has considered the effect of the proposed amendment on small businesses. The Register has determined that the amendments would not have a significant economic impact on a substantial number of small businesses because they may request a waiver from the requirement to submit payment via an electronic funds transfer in the event compliance with the requirement would create a financial or other hardship for the remitter.

List of Subjects in 37 CFR Part 201

Copyright.

Proposed Regulations

For the reasons set forth in the preamble, part 201 of title 37 of the Code of Federal Regulations is proposed to be amended as follows:

PART 201—GENERAL PROVISIONS

1. The authority citation for part 201 continues to read as follows:

Authority: 17 U.S.C. 702.

2. Amend § 201.11 to revise paragraph (f) to read as follows:

§ 201.11 Satellite carrier statements of account covering statutory licenses for secondary transmissions.≤

* * * * *

(f) *Royalty fee payment.* (1) All royalty fees shall be paid by a single electronic funds transfer and payment must be received in the designated bank by the filing deadline for the relevant accounting period. The following information shall be provided as part of the EFT and/or as part of the remittance advice as provided for in circulars issued by the Copyright Office:

(i) Remitter's name and address;

(ii) Name of a contact person, telephone number and extension, and email address;

(iii) The actual or anticipated date that the EFT will be transmitted;

(iv) Type of royalty payment (*i.e.* satellite);

(v) Total amount submitted via the EFT;

(vi) Total amount to be paid by year and period;

(vii) Number of statements of account that the EFT covers;

(viii) ID numbers assigned by the Licensing Division;

(ix) Legal name of the owner for each Statement of Account.

(2) The remittance advice shall be attached to the Statement(s) of Account. In addition, a copy of the remittance advice shall be emailed or sent by facsimile to the Licensing Division.

(3) A remitter may request a waiver from the requirement for payment by electronic funds transfer as set forth in paragraph (1) of this section. To obtain a waiver, the remitter shall submit to the Licensing Division at least 60 days prior to the royalty fee due date a certified statement setting forth the reasons explaining why payment by an electronic funds transfer would impose a financial or other hardship on the remitter. The certification must be signed by a duly authorized

representative of the entity making the payment. A waiver shall cover only a single payment period. Failure to obtain a waiver may result in the remittance being returned to the remitter.

* * * * *

3. Amend § 201.17 to revise paragraph (i)(1) to read as follows:

§ 201.17 Statements of Account covering compulsory licenses for secondary transmissions by cable systems.

* * * * *

(i) *Royalty fee payment.* (1) All royalty fees must be paid by a single electronic funds transfer, and must be received in the designated bank by the filing deadline for the relevant accounting period. The following information must be provided as part of the EFT and/or as part of the remittance advice as provided for in circulars issued by the Copyright Office:

(i) Remitter's name and address;

(ii) Name of a contact person, telephone number and extension, and email address;

(iii) The actual or anticipated date that the EFT will be transmitted;

(iv) Type of royalty payment (*i.e.* cable);

(v) Total amount submitted via the EFT;

(vi) Total amount to be paid by year and period;

(vii) Number of statements of account that the EFT covers;

(viii) ID numbers assigned by the Licensing Division;

(ix) Legal name of the owner for each Statement of Account;

(x) Identification of the first community served (city and state).

(2) The remittance advice shall be attached to the Statement(s) of Account. In addition, a copy of the remittance advice shall be emailed or sent by facsimile to the Licensing Division.

(3) The Office may waive the requirement for payment by electronic funds transfer as set forth in paragraph (1)(i) of this section. At least 60 days prior to the royalty fee due date, the remitter shall submit to the Licensing Division a certified statement setting forth the reasons explaining why payment by an electronic funds transfer would be virtually impossible or, alternatively, why it would impose a financial or other hardship on the remitter. The statement must be signed by a duly authorized representative of the entity making the payment. A waiver shall cover only a single payment period. Failure to obtain a waiver may result in the remittance being returned to the remitter.

* * * * *

4. Amend § 201.28 as follows:

a. By revising paragraph (e)(3)(ii);

b. By redesignating § § 201.28(h) through (l) as § § 201.28(i) through (m) respectively, and adding a new § 201.28(h);

c. By amending newly redesignated § 201.28(j)(1)(ii) to remove ''(i)(2)'' and add in its place ''(j)(2)''

d. By amending newly redesignated § 201.28(j)(3)(i) to remove ''(i)(3)'' and add in its place ''(j)(3)''

e. By amending newly redesignated § 201.28(j)(3)(vi) to remove ''(i)'' and add in its place ''(j)''.

The additions and revisions to § 201.28 read as follows:

§ 201.28 Statements of Account for digital media audio recording devices or media.

* * * * *

(e) * * *

(3) * * *

(ii) The amount of the royalty payment shall be calculated in accordance with the instructions specified in the quarterly Statement of Account form. Payment shall be made as specified in section 201.28(h).

* * * * *

(h) *Royalty fee payment.* (1) All royalty fees must be paid by a single electronic funds transfer, and must be received in the designated bank by the filing deadline for the relevant accounting period. The following information must be provided as part of the EFT and/or as part of the remittance advice as provided for in circulars issued by the Copyright Office:

(i) Remitter's name and address;

(ii) Name of a contact person, telephone number and extension, and email address;

(iii) The actual or anticipated date that the EFT will be transmitted;

(iv) Type of royalty payment (*i.e.* DART);

(v) Total amount submitted via the EFT;

(vi) Total amount to be paid by year and period;

(vii) Number of statements of account that the EFT covers;

(viii) ID numbers assigned by the Licensing Division;

(ix) Legal name of the owner for each Statement of Account.

(2) The remittance advice shall be attached to the Statement(s) of Account. In addition, a copy of the remittance advice shall be emailed or sent by facsimile to the Licensing Division.

(3) The Office may waive the requirement for payment by electronic funds transfer as set forth in paragraph (1) of this section. At least 60 days prior to the royalty fee due date, the remitter shall submit to the Licensing Division a certified statement setting forth the reasons explaining why payment by an electronic funds transfer would be virtually impossible or, alternatively, why it would impose a financial or other hardship on the remitter. The certification must be signed by a duly authorized representative of the entity making the payment. A waiver shall cover only a single payment period. Failure to obtain a waiver may result in the remittance being returned to the remitter.

* * * * *

Dated: April 20, 2006.

Tanya M. Sandros,

Associate General Counsel.

[FR Doc. E6–6186 Filed 4–26–06; 8:45 am]

BILLING CODE 1410–33–S

ENVIRONMENTAL PROTECTION AGENCY

40 CFR Part 52

[EPA–R03–OAR–2006–0279; FRL–8162–7]

Approval and Promulgation of Air Quality Implementation Plans; Pennsylvania; VOC and NO_X RACT Determinations for Eight Individual Sources

AGENCY: Environmental Protection Agency (EPA).

ACTION: Proposed rule.

SUMMARY: EPA proposes to approve revisions to the Pennsylvania State Implementation Plan (SIP). The revisions were submitted by the Pennsylvania Department of Environmental Protection (PADEP) to establish and require reasonably available control technology (RACT) for eight major sources of volatile organic compounds (VOC) and nitrogen oxides (NO_X) pursuant to the Commonwealth of Pennsylvania's (Pennsylvania or the Commonwealth) SIP-approved generic RACT regulations. EPA is proposing to approve these revisions in accordance with the Clean Air Act (CAA).

DATES: Written comments must be received on or before May 30, 2006.

ADDRESSES: Submit your comments, identified by Docket ID Number EPA–R03–OAR–2006–0279 by one of the following methods:

A. *http://www.regulations.gov.* Follow the on-line instructions for submitting comments.

B. *E-mail: morris.makeba@epa.gov.*

C. *Mail:* EPA–R03–OAR–2006–0279, Makeba Morris, Chief, Air Quality Planning Branch, Mailcode 3AP21, U.S. Environmental Protection Agency, Region III, 1650 Arch Street, Philadelphia, Pennsylvania 19103.

D. *Hand Delivery:* At the previously-listed EPA Region III address. Such deliveries are only accepted during the Docket's normal hours of operation, and special arrangements should be made for deliveries of boxed information.

Instructions: Direct your comments to Docket ID No. EPA–R03–OAR–2006–0279. EPA's policy is that all comments received will be included in the public docket without change, and may be made available online at *http://www.regulations.gov*, including any personal information provided, unless the comment includes information claimed to be Confidential Business Information (CBI) or other information whose disclosure is restricted by statute. Do not submit information that you consider to be CBI or otherwise protected through *http://www.regulations.gov* or e-mail. The *http://www.regulations.gov* Web site is an ''anonymous access'' system, which means EPA will not know your identity or contact information unless you provide it in the body of your comment. If you send an e-mail comment directly to EPA without going through *http://www.regulations.gov*, your e-mail address will be automatically captured and included as part of the comment that is placed in the public docket and made available on the Internet. If you submit an electronic comment, EPA recommends that you include your name and other contact information in the body of your comment and with any disk or CD–ROM you submit. If EPA cannot read your comment due to technical difficulties and cannot contact you for clarification, EPA may not be able to consider your comment. Electronic files should avoid the use of special characters, any form of encryption, and be free of any defects or viruses.

Docket: All documents in the electronic docket are listed in the *http://www.regulations.gov* index. Although listed in the index, some information is not publicly available, *i.e.*, CBI or other information whose disclosure is restricted by statute. Certain other material, such as copyrighted material, is not placed on the Internet and will be publicly available only in hard copy form. Publicly available docket materials are available either electronically in *http://www.regulations.gov* or in hard copy during normal business hours at the Air Protection Division, U.S. Environmental Protection Agency, Region III, 1650 Arch Street, Philadelphia, Pennsylvania 19103. Copies of the State submittal are available at the Pennsylvania Department of Environmental Protection, Bureau of Air Quality, P.O. Box 8468, 400 Market Street, Harrisburg, Pennsylvania 17105.

FOR FURTHER INFORMATION CONTACT: Ellen Wentworth, (215) 814–2034, or by e-mail at *wentworth.ellen@epa.gov.*

SUPPLEMENTARY INFORMATION: On August 1, 1995, March 21, 1996, October 18, 1996, April 20, 1998, October 2, 1998, June 22, 1999, and February 4, 2003, PADEP submitted revisions to the Pennsylvania SIP. These SIP revisions consist of source-specific operating permits issued by PADEP to establish and require RACT for eight individual sources pursuant to Pennsylvania's SIP-approved generic RACT regulations.

I. Background

Pursuant to sections 182(b)(2) and 182(f) of the CAA, Pennsylvania is required to establish and implement RACT for all major VOC and NO_X sources. The major source size is determined by its location, the classification of that area and whether it is located in the ozone transport region (OTR). Under section 184 of the CAA, RACT as specified in sections 182(b)(2) and 182(f) applies throughout the OTR. The entire Commonwealth is located within the OTR. Therefore, RACT is applicable statewide in Pennsylvania.

State implementation plan revisions imposing RACT for three classes of VOC sources are required under section 182(b)(2). The categories are:

(1) All sources covered by a Control Technique Guideline (CTG) document issued between November 15, 1990 and the date of attainment;

(2) All sources covered by a CTG issued prior to November 15, 1990; and

(3) All major non-CTG sources.

The Pennsylvania SIP already has approved RACT regulations and requirements for all sources and source categories covered by the CTGs. The Pennsylvania SIP also has approved regulations to require major sources of NO_X and additional major sources of VOC emissions (not covered by a CTG) to implement RACT. These regulations are commonly termed the ''generic RACT regulations.'' A generic RACT regulation is one that does not, itself, specifically define RACT for a source or source categories but instead establishes procedures for imposing case-by-case RACT determinations. The Commonwealth's SIP-approved generic RACT regulations consist of the procedures PADEP uses to establish and impose RACT for subject sources of VOC and NO_X.

Pursuant to the SIP-approved generic RACT rules, PADEP imposes RACT on each subject source in an enforceable document, usually a Plan Approval (PA), Consent Order (CO), or Operating Permit (OP). The Commonwealth then submits these PAs, COs, or OPs to EPA for approval as source-specific SIP revisions. EPA reviews these SIP revisions to ensure that the PADEP has determined and imposed RACT in accordance with the provisions of the SIP-approved generic RACT rules.

It must be noted that the Commonwealth has adopted and is implementing additional ''post RACT requirements'' to reduce seasonal NO_X emissions in the form of a NO_X cap and trade regulation, 25 Pa Code Chapters 121 and 123, based upon a model rule developed by the States in the OTR. That regulation was approved as a SIP revision on June 6, 2000 (65 FR 35842). Pennsylvania has also adopted 25 Pa Code Chapter 145 to satisfy Phase I of the NO_X SIP call. That regulation was approved as a SIP revision on August 21, 2001 (66 FR 43795). Federal approval of a source-specific RACT determination for a major source of NO_X in no way relieves that source from any applicable requirements found in 25 PA Code Chapters 121, 123 and 145.

II. Summary of the SIP Revisions

The following table identifies the sources and the individual operating permits (OPs) which are the subject of this rulemaking.

PENNSYLVANIA—VOC AND NO_X RACT DETERMINATIONS FOR INDIVIDUAL SOURCES

Source's name	County	Operating Permit (OP #)	Source type	''Major Source'' pollutant
Pennsylvania Power & Light Company—West Shore.	Cumberland	OP–21–2009	Combustion Turbines	VOC and NO_X.
Foster Wheeler Mt. Carmel, Inc	Northumberland	OP–49–0002	Cogeneration Facility	NO_X.
Metropolitan Edison Company—Portland.	Northampton	OP–48–0006	Combustion Turbines and Boilers	NO_X.
Pennsylvania Power & Light Company	Lycoming	OP–41–0004	Combustion Turbine	NO_X.

PENNSYLVANIA—VOC AND NO_X RACT DETERMINATIONS FOR INDIVIDUAL SOURCES—Continued

Source's name	County	Operating Permit (OP #)	Source type	"Major Source" pollutant
Pennsylvania Power & Light Company	Clinton	OP–18–0006	Combustion Turbines	NO_X.
Texas Eastern Transmission Corporation.	Juniata County	OP–34–2002	Compressor Station	NO_X.
Pennsylvania Power & Light Company	Northampton	OP 48–0011	Combustion Turbines and Diesel Generators.	VOC and NO_X.
Johnstown Corporation	Cambria	OP–11–000–034	Steel Foundry	VOC.

Interested parties are advised that copies of Pennsylvania's SIP submittals for these sources, including the actual OPs imposing RACT, PADEP's evaluation memoranda, and the sources' RACT proposals (referenced in PADEP's evaluation memoranda) are included and may be viewed in their entirety in both the electronic and hard copy versions of the docket for this final rule. As previously stated, all documents in the electronic docket are listed in the *http://www.regulations.gov* index. Publicly available docket materials are available either electronically in *http://www.regulations.gov* or in hard copy during normal business hours at the Air Protection Division, U.S. Environmental Protection Agency, Region III, 1650 Arch Street, Philadelphia, Pennsylvania 19103. Copies of the State submittal are available at the Pennsylvania Department of Environmental Protection, Bureau of Air Quality, P.O. Box 8468, 400 Market Street, Harrisburg, Pennsylvania 17105.

EPA is approving these RACT SIP submittals because PADEP established and imposed these RACT requirements in accordance with the criteria set forth in its SIP-approved generic RACT regulations applicable to these sources. In accordance with its SIP-approved generic RACT rule, the Commonwealth has also imposed recordkeeping, monitoring, and testing requirements on these sources sufficient to determine compliance with the applicable RACT determinations.

III. Proposed Action

EPA is approving the revisions to the Pennsylvania SIP submitted by PADEP on August 1, 1995, March 21, 1996, October 18, 1996, April 20, 1998, October 2, 1998, June 22, 1999, and February 4, 2003 to establish and require VOC and NO_X RACT for eight individual sources pursuant to the Commonwealth's SIP-approved generic RACT regulations. EPA is soliciting public comments on this proposed rule to approve these source-specific RACT determinations established and imposed by PADEP in accordance with the criteria set forth in its SIP-approved generic RACT regulations applicable to these sources. These comments will be considered before taking final action.

IV. Statutory and Executive Order Reviews

Under Executive Order 12866 (58 FR 51735, October 4, 1993), this proposed action is not a ''significant regulatory action'' and therefore is not subject to review by the Office of Management and Budget. For this reason, this action is also not subject to Executive Order 13211, ''Actions Concerning Regulations That Significantly Affect Energy Supply, Distribution, or Use'' (66 FR 28355 (May 22, 2001)). This action merely proposes to approve state law as meeting Federal requirements and imposes no additional requirements beyond those imposed by state law. Accordingly, the Administrator certifies that this proposed rule will not have a significant economic impact on a substantial number of small entities under the Regulatory Flexibility Act (5 U.S.C. 601 *et seq.*). Because this rule proposes to approve pre-existing requirements under state law and does not impose any additional enforceable duty beyond that required by state law, it does not contain any unfunded mandate or significantly or uniquely affect small governments, as described in the Unfunded Mandates Reform Act of 1995 (Pub. L. 104–4). This proposed rule also does not have a substantial direct effect on one or more Indian tribes, on the relationship between the Federal Government and Indian tribes, or on the distribution of power and responsibilities between the Federal Government and Indian tribes, as specified by Executive Order 13175 (65 FR 67249, November 9, 2000), nor will it have substantial direct effects on the States, on the relationship between the national government and the States, or on the distribution of power and responsibilities among the various levels of government, as specified in Executive Order 13132 (64 FR 43255, August 10, 1999), because it merely proposes to approve a state rule implementing a Federal standard, and does not alter the relationship or the distribution of power and responsibilities established in the Clean Air Act. This proposed rule also is not subject to Executive Order 13045 (62 FR 19885, April 23, 1997), because it is not economically significant.

In reviewing SIP submissions, EPA's role is to approve state choices, provided that they meet the criteria of the Clean Air Act. In this context, in the absence of a prior existing requirement for the State to use voluntary consensus standards (VCS), EPA has no authority to disapprove a SIP submission for failure to use VCS. It would thus be inconsistent with applicable law for EPA, when it reviews a SIP submission, to use VCS in place of a SIP submission that otherwise satisfies the provisions of the Clean Air Act. Thus, the requirements of section 12(d) of the National Technology Transfer and Advancement Act of 1995 (15 U.S.C. 272 note) do not apply. As required by section 3 of Executive Order 12988 (61 FR 4729, February 7, 1996), in issuing this proposed rule, EPA has taken the necessary steps to eliminate drafting errors and ambiguity, minimize potential litigation, and provide a clear legal standard for affected conduct. EPA has complied with Executive Order 12630 (53 FR 8859, March 15, 1988) by examining the takings implications of the rule in accordance with the ''Attorney General's Supplemental Guidelines for the Evaluation of Risk and Avoidance of Unanticipated Takings'' issued under the executive order.

This proposed rule to approve eight source-specific RACT determinations established and imposed by the Commonwealth of Pennsylvania pursuant to its SIP-approved generic RACT regulations does not impose an information collection burden under the provisions of the Paperwork Reduction Act of 1995 (44 U.S.C. 3501 *et seq.*).

List of Subjects in 40 CFR Part 52

Environmental protection, Air pollution control, Nitrogen dioxide, Ozone, Reporting and recordkeeping requirements, Volatile organic compounds.

Authority: 42 U.S.C. 7401 *et seq.*

Dated: April 19, 2006.

William Early,

Acting Regional Administrator, Region III.

[FR Doc. E6–6366 Filed 4–26–06; 8:45 am]

BILLING CODE 6560–50–P

ENVIRONMENTAL PROTECTION AGENCY

40 CFR Part 52

[EPA–R03–OAR–2006–0296; FRL–8162–6]

Approval and Promulgation of Air Quality Implementation Plans; Pennsylvania; NO_X and VOC RACT Determinations for Eight Individual Sources

AGENCY: Environmental Protection Agency (EPA).

ACTION: Proposed rule.

SUMMARY: EPA proposes to approve revisions to the Pennsylvania State Implementation Plan (SIP). The revisions were submitted by the Pennsylvania Department of Environmental Protection (PADEP) to establish and require reasonably available control technology (RACT) for seven sources of volatile organic compounds (VOC) and one source of nitrogen oxides (NO_X) pursuant to the Commonwealth of Pennsylvania's (Pennsylvania or the Commonwealth) SIP-approved generic RACT regulations. EPA is proposing to approve these revisions in accordance with the Clean Air Act (CAA).

DATES: Written comments must be received on or before May 30, 2006.

ADDRESSES: Submit your comments, identified by Regional Material in EDocket (RME) ID Number EPA–R03–OAR–2006–0296 by one of the following methods:

A. *http://www.regulations.gov.* Follow the on-line instructions for submitting comments.

B. E-mail: *morris.makeba@epa.gov.*

C. Mail: EPA–R03–OAR–2006–0296, Makeba Morris, Chief, Air Quality Planning Branch, Mailcode 3AP21, U.S. Environmental Protection Agency, Region III, 1650 Arch Street, Philadelphia, Pennsylvania 19103.

D. Hand Delivery: At the previously-listed EPA Region III address. Such deliveries are only accepted during the Docket's normal hours of operation, and special arrangements should be made for deliveries of boxed information.

Instructions: Direct your comments to RME ID No. EPA–R03–OAR–2006–0296. EPA's policy is that all comments received will be included in the public docket without change, and may be made available online at *http://www.regulations.gov*, including any personal information provided, unless the comment includes information claimed to be Confidential Business Information (CBI) or other information whose disclosure is restricted by statute. Do not submit information that you consider to be CBI or otherwise protected through *http://www.regulations.gov* or e-mail. The *http://www.regulations.gov* Web site is an ''anonymous access'' system, which means EPA will not know your identity or contact information unless you provide it in the body of your comment. If you send an e-mail comment directly to EPA without going through *http://www.regulations.gov*, your e-mail address will be automatically captured and included as part of the comment that is placed in the public docket and made available on the Internet. If you submit an electronic comment, EPA recommends that you include your name and other contact information in the body of your comment and with any disk or CD–ROM you submit. If EPA cannot read your comment due to technical difficulties and cannot contact you for clarification, EPA may not be able to consider your comment. Electronic files should avoid the use of special characters, any form of encryption, and be free of any defects or viruses.

Docket: All documents in the electronic docket are listed in the *http://www.regulations.gov* index. Although listed in the index, some information is not publicly available, *i.e.*, CBI or other information whose disclosure is restricted by statute. Certain other material, such as copyrighted material, is not placed on the Internet and will be publicly available only in hard copy form. Publicly available docket materials are available either electronically in *http://www.regulations.gov* or in hard copy during normal business hours at the Air Protection Division, U.S. Environmental Protection Agency, Region III, 1650 Arch Street, Philadelphia, Pennsylvania 19103. Copies of the State submittal are available at the Pennsylvania Department of Environmental Protection, Bureau of Air Quality, P.O. Box 8468, 400 Market Street, Harrisburg, Pennsylvania 17105.

FOR FURTHER INFORMATION CONTACT: LaKeshia N. Robertson, (215) 814–2113, or by e-mail at *robertson.lakeshia@epa.gov.*

SUPPLEMENTARY INFORMATION: On March 27, 1995, August 1, 1995, January 10, 1996, March 21, 1996, October 18, 1996, June 22, 1999, and July 28, 1999, PADEP submitted revisions to the Pennsylvania SIP. These SIP revisions consist of source-specific operating permits and/or plan approvals issued by PADEP to establish and require RACT for eight sources pursuant to Pennsylvania's SIP-approved generic RACT regulations.

I. Background

Pursuant to sections 182(b)(2) and 182(f) of CAA, Pennsylvania is required to establish and implement RACT for all major VOC and NO_X sources. The major source size is determined by its location, the classification of that area and whether it is located in the ozone transport region (OTR). Under section 184 of the CAA, RACT as specified in sections 182(b)(2) and 182(f) applies throughout the OTR. The entire Commonwealth is located within the OTR. Therefore, RACT is applicable statewide in Pennsylvania.

State implementation plan revisions imposing RACT for three classes of VOC sources are required under section 182(b)(2). The categories are:

(1) All sources covered by a Control Technique Guideline (CTG) document issued between November 15, 1990 and the date of attainment;

(2) All sources covered by a CTG issued prior to November 15, 1990; and

(3) All major non-CTG sources.

The Pennsylvania SIP already has approved RACT regulations and requirements for all sources and source categories covered by the CTGs. The Pennsylvania SIP also has approved regulations to require major sources of NO_X and additional major sources of VOC emissions (not covered by a CTG) to implement RACT. These regulations are commonly termed the ''generic RACT regulations''. A generic RACT regulation is one that does not, itself, specifically define RACT for a source or source categories but instead establishes procedures for imposing case-by-case RACT determinations. The Commonwealth's SIP-approved generic RACT regulations consist of the procedures PADEP uses to establish and impose RACT for subject sources of VOC and NO_X. Pursuant to the SIP-approved generic RACT rules, PADEP imposes RACT on each subject source in an enforceable document, usually a Plan Approval (PA) or Operating Permit (OP). The Commonwealth then submits these PAs and OPs to EPA for approval as source-specific SIP revisions. EPA reviews these SIP revisions to ensure that the Pennsylvania DEP has determined and imposed RACT in accordance with the provisions of the SIP-approved generic RACT rules.

It must be noted that the Commonwealth has adopted and is implementing additional ''post RACT requirements'' to reduce seasonal NO_X emissions in the form of a NO_X cap and trade regulation, 25 Pa Code Chapters 121 and 123, based upon a model rule developed by the States in the OTR. That regulation was approved as SIP revision on June 6, 2000 (65 FR 35842). Pennsylvania has also adopted 25 Pa Code Chapter 145 to satisfy Phase I of the NO_X SIP call. That regulation was approved as a SIP revision on August 21, 2001 (66 FR 43795). Federal approval of a source-specific RACT determination for a major source of NO_X in no way relieves that source from any applicable requirements found in 25 PA Code Chapters 121, 123 and 145.

II. Summary of the SIP Revisions

The following table identifies the sources and the individual plan approvals (PAs) and operating permits (OPs) which are the subject of this rulemaking.

PENNSYLVANIA—VOC AND NO_X RACT DETERMINATIONS FOR INDIVIDUAL SOURCES

Source's name	County	Plan Approval (PA #) Operating Permit (OP #)	Source type	''Major Source'' pollutant
Carlisle Tire & Rubber Company	Cumberland	21–2003	Specialty Tire Manufacturing	VOC.
The Carbide/Graphite Group, Inc	Elk	OP 24–012	Graphite Electrode and Graphite Specialities Manufacturing Facility.	VOC.
Celotex Corporation	Northumberland	OP–49–0013	Fiberboard Manufacturing Facility	VOC.
American Railcar Industries, Inc. Shippers Car Line Division.	Northumberland	OP–49–0012	Railcar Cleaning and Refurbishment Operation.	VOC.
ACF	Northumberland	OP–49–0009	Railcar Manufacturing Operation	VOC.
New Holland North America, Inc	Lancaster	36–2028	Surface Coating Operation	VOC.
Allsteel, Inc	Luzerne	40–001–5	Metal Furniture Coatings	VOC.
Ball-Foster Glass Container Co	McKean	OP 42–028	Glass Melting Furnaces	NO_X.

Interested parties are advised that copies of Pennsylvania's SIP submittals for these sources, including the actual PAs and OPs imposing RACT, PADEP's evaluation memoranda and the sources' RACT proposals (referenced in PADEP's evaluation memoranda) are included and may be viewed in their entirety in both the electronic and hard copy versions of the docket for this final rule. As previously stated, all documents in the electronic docket are listed in the *http://www.regulations.gov* index. Publicly available docket materials are available either electronically in *http://www.regulations.gov* or in hard copy during normal business hours at the Air Protection Division, U.S. Environmental Protection Agency, Region III, 1650 Arch Street, Philadelphia, Pennsylvania 19103. Copies of the State submittal are available at the Pennsylvania Department of Environmental Protection, Bureau of Air Quality, P.O. Box 8468, 400 Market Street, Harrisburg, Pennsylvania 17105.

EPA is approving these RACT SIP submittals because PADEP established and imposed these RACT requirements in accordance with the criteria set forth in its SIP-approved generic RACT regulations applicable to these sources. In accordance with its SIP-approved generic RACT rule, the Commonwealth has also imposed record-keeping, monitoring, and testing requirements on these sources sufficient to determine compliance with the applicable RACT determinations.

III. Proposed Action

EPA is approving the revisions to the Pennsylvania SIP submitted by PADEP on March 27, 1995, August 1, 1995, January 10, 1996, March 21, 1996, October 18, 1996, June 22, 1999, and July 28, 1999, to establish and require VOC and NO_X RACT for eight individual sources pursuant to the Commonwealth's SIP-approved generic RACT regulations. EPA is soliciting public comments on this proposed rule to approve these source-specific RACT determinations established and imposed by PADEP in accordance with the criteria set forth in its SIP-approved generic RACT regulations applicable to these sources. These comments will be considered before taking final action.

IV. Statutory and Executive Order Reviews

Under Executive Order 12866 (58 FR 51735, October 4, 1993), this proposed action is not a ''significant regulatory action'' and therefore is not subject to review by the Office of Management and Budget. For this reason, this action is also not subject to Executive Order 13211, ''Actions Concerning Regulations That Significantly Affect Energy Supply, Distribution, or Use'' (66 FR 28355 (May 22, 2001)). This action merely proposes to approve state law as meeting Federal requirements and imposes no additional requirements beyond those imposed by state law. Accordingly, the Administrator certifies that this proposed rule will not have a significant economic impact on a substantial number of small entities under the Regulatory Flexibility Act (5 U.S.C. 601 *et seq.*). Because this rule proposes to approve pre-existing requirements under state law and does not impose any additional enforceable duty beyond that required by state law, it does not contain any unfunded mandate or significantly or uniquely affect small governments, as described in the Unfunded Mandates Reform Act of 1995 (Pub. L. 104–4). This proposed rule also does not have a substantial direct effect on one or more Indian tribes, on the relationship between the Federal Government and Indian tribes, or on the distribution of power and responsibilities between the Federal Government and Indian tribes, as specified by Executive Order 13175 (65 FR 67249, November 9, 2000), nor will it have substantial direct effects on the States, on the relationship between the national government and the States, or on the distribution of power and responsibilities among the various levels of government, as specified in Executive Order 13132 (64 FR 43255, August 10, 1999), because it merely proposes to approve a state rule implementing a Federal standard, and does not alter the relationship or the distribution of power and responsibilities established in the Clean Air Act. This proposed rule also is not subject to Executive Order 13045 (62 FR 19885, April 23, 1997), because it is not economically significant.

In reviewing SIP submissions, EPA's role is to approve state choices, provided that they meet the criteria of the Clean Air Act. In this context, in the

absence of a prior existing requirement for the State to use voluntary consensus standards (VCS), EPA has no authority to disapprove a SIP submission for failure to use VCS. It would thus be inconsistent with applicable law for EPA, when it reviews a SIP submission, to use VCS in place of a SIP submission that otherwise satisfies the provisions of the Clean Air Act. Thus, the requirements of section 12(d) of the National Technology Transfer and Advancement Act of 1995 (15 U.S.C. 272 note) do not apply. As required by section 3 of Executive Order 12988 (61 FR 4729, February 7, 1996), in issuing this proposed rule, EPA has taken the necessary steps to eliminate drafting errors and ambiguity, minimize potential litigation, and provide a clear legal standard for affected conduct. EPA has complied with Executive Order 12630 (53 FR 8859, March 15, 1988) by examining the takings implications of the rule in accordance with the ''Attorney General's Supplemental Guidelines for the Evaluation of Risk and Avoidance of Unanticipated Takings'' issued under the executive order. This proposed rule to approve eight source-specific RACT determinations established and imposed by the Commonwealth of Pennsylvania pursuant to its SIP-approved generic RACT regulations does not impose an information collection burden under the provisions of the Paperwork Reduction Act of 1995 (44 U.S.C. 3501 *et seq.*).

List of Subjects in 40 CFR Part 52

Environmental protection, Air pollution control, Nitrogen dioxide, Ozone, Reporting and recordkeeping requirements, Volatile organic compounds.

Authority: 42 U.S.C. 7401 *et seq.*

Dated: April 19, 2006.

William C. Early,

Acting Regional Administrator, Region III.

[FR Doc. E6–6364 Filed 4–26–06; 8:45 am]

BILLING CODE 6560–50–P

DEPARTMENT OF THE INTERIOR

Bureau of Land Management

43 CFR Parts 2800 and 2880

[WO–350–06–1430–PP]

RIN 1004–AD87

Update of Linear Right-of-Way Rental Schedule

AGENCY: Bureau of Land Management, Interior.

ACTION: Advance Notice of Proposed Rulemaking.

SUMMARY: The Bureau of Land Management (BLM) requests comments and suggestions to assist in the writing of a proposed rule to update the linear right-of-way rental schedule in 43 CFR parts 2800 and 2880. The rental schedule covers most linear rights-of-way granted under section 28 of the Mineral Leasing Act of 1920, as amended (MLA), and Title V of the Federal Land Policy and Management Act of 1976, as amended (FLPMA). Both laws require the holder of a right-of-way to pay annually, in advance, the fair market value to occupy, use, or traverse public lands for facilities such as power lines, fiber optic lines, pipelines, roads, and ditches.

Section 367 of the Energy Policy Act of 2005 (the Act) directs the Secretary of the Interior to update the per-acre rental fee schedule found in 43 CFR 2806.20. This update is to be completed not later than one year after the date of enactment of the Act, which occurred on August 8, 2005. The Act requires that the BLM revise the per-acre rental fee-zone value schedule by state, county, and type of linear right-of-way use to reflect current land values in each zone. The Act also requires the Secretary of Agriculture (Forest Service) to make the same revisions for rights-of-way on National Forest System lands. We encourage members of the public to provide comments and suggestions to help with updating the BLM's and the Forest Service's rental schedule, as described in the Act.

DATES: We will accept comments and suggestions on the Advance Notice of Proposed Rulemaking until May 30, 2006.

ADDRESSES: You may submit comments by any of the following methods listed below.

Mail: Director (630) Bureau of Land Management, Administrative Record, Room 401 LS, Eastern States Office, 7450 Boston Boulevard, Springfield, Virginia 22153.

Personal or messenger delivery: Room 401, 1620 L Street, NW,, Washington, DC 20036.

Federal eRulemaking Portal: http://www.regulations.gov.

E-mail: comments_washington@blm.gov. (Include ''Attn: AD87'').

FOR FURTHER INFORMATION CONTACT: For information on the substance of the Advance Notice, please contact Christian Crowley at (202) 208–3799. For information on procedural matters, please contact Ian Senio at (202) 452–5049. Persons who use a telecommunications device for the deaf (TDD) may call the Federal Information Relay Service (FIRS) at 1–800–877–8339, to contact the above individuals during business hours. FIRS is available twenty-four hours a day, seven days a week.

SUPPLEMENTARY INFORMATION:

I. Public Comment Procedures

Commenting on the Advance Notice of Proposed Rulemaking

Written comments or suggestions should:

- Be specific;
- Explain the reasoning behind your comments and suggestions;
- Address the issues outlined in the Notice; and
- Where possible, reference the specific section or paragraph of existing laws or regulations that you are addressing.

For comments and recommendations to be most useful, and most likely to influence decisions on the content of the proposed rule, they should:

- Be substantive;
- Facilitate development of a uniform, cost effective administrative process for calculating rental payments;
- Result in a fair and reasonable payment of fair market rent; and
- Include citations to, and analyses of, applicable laws and regulations.

The BLM is particularly interested in receiving comments and suggestions about the topics listed in Section III of this Notice. All communication on these topics should refer to RIN 1004–AD87, and may be submitted by several methods listed under the **ADDRESSES** section of this Notice.

Comments received after the close of the comment period (see **DATES**) need not be considered or included in the Administrative Record for the proposed rule. Likewise, comments delivered to an address other than those listed above (see **ADDRESSES**) need not be considered or included in the Administrative Record for the proposed rule.

Reviewing Comments Submitted by Others

Comments, including names and street addresses of respondents, will be available for public review at the address listed under ''**ADDRESSES:** Personal or messenger delivery'' during regular business hours (7:45 a.m. to 4:15 a.m.), Monday through Friday, except holidays. Individual respondents may request confidentiality, which will be honored to the extent allowable by law. Those wishing to withhold their name or address (except for the city or town)

must state this prominently at the beginning of their comment. Submissions from organizations or businesses, and from individuals identifying themselves as representatives or officials of organizations or businesses, will be made available for public inspection in their entirety.

II. Background

Statutory

Section 367 of the Act, Fair Market Value Determinations for Linear Rights-of-Way Across Public Lands and National Forests, directs the Secretary of the Interior to: (1) Update 43 CFR 2806.20, which contains the per-acre rent schedule for linear rights-of-way; (2) revise the per acre rental fee zone value schedule by state, county, and type of linear right-of-way uses to reflect current values of land in each zone; and (3) complete the update within one year of enactment of the Act. The Act also directs the Secretary of Agriculture to make the same revisions to the regulations that apply to rights-of-way granted on National Forest System (NFS) lands. This provision supplements existing Secretarial authority to assess and collect fair market value of the right to use, cross, or traverse public or NFS lands.

Current Linear Rent Schedule

On July 8, 1987, and September 30, 1987, the BLM published regulations establishing rental schedules for linear rights-of-way granted under Section 28 of the MLA and Title V of FLPMA (52 FR 25818 and 52 FR 36576). The Forest Service uses these same schedules to charge rent for rights-of-way across NFS lands. Therefore, updates to these schedules would also impact the Forest Service and users of NFS lands.

The 1987 rental schedule was developed to set fair market rent, while minimizing the need for individual real estate appraisals for each right-of-way requiring rent payments, as well as to avoid the costs, delays, and unpredictability of the appraisal process in reasonably setting fair market rent.

The 1987 rental schedule defines eight fee zones based on the distribution of average land values by county in each of the states, except Alaska. (The existing rent schedule does not apply to Alaska. Linear right-of-way rental fees in Alaska are currently determined on a case-by-case basis based on local market values.) A county was assigned to one of the eight Zone Values, based on land values in the county: lower-value counties were assigned lower-numbered zones. The eight Zone Values were set at $50, $100, $200, $300, $400, $500, $600, and $1,000 per acre. A county's Zone Value is translated into a per-acre Zone Rent by use of the adjustment formula described below. To calculate the annual right-of-way rental payment, the Zone Rent is multiplied by the total acreage within the right-of-way. The formula for Zone Rent is:

Zone Rent = (Zone Value) × (Impact Adjustment) × (Price Index) × (Treasury Security Rate)

The Zone Value term in the formula is the land value that was established for each of the eight zones. The Zone Values established in 1987 have not been updated since that time; however, it is generally recognized that land values have increased in most areas over the past 20 years.

The Impact Adjustment term in the formula reflects the differences in land-use impacts between (1) oil, gas, and other energy-related pipelines, roads, ditches, and canals, and (2) electrical transmission and distribution lines, telephone lines, and non-energy related pipelines. Energy-related pipelines and roads were considered as having a greater surface disturbance impact on the land, and were adjusted to 80 percent of the Zone Value. Electrical transmission and distribution lines, phone lines, and non-energy related pipelines with a smaller area of disturbance, were adjusted to 70 percent of the Zone Value.

The Price Index term in the formula allows the rental values to increase with inflation. This number changes annually reflecting the change in the Gross Domestic Product, Implicit Price Deflator Index.

The Treasury Security term in the formula reflects a reasonable rate of return to the United States for the use of the land within the right-of-way. The 1987 regulations were based on a rate of return of 6.41 percent for a one year Treasury Security.

BLM Right-of-Way Program and Revenues

The BLM generated over $15 million in right-of-way rental receipts for fiscal year 2005. The BLM administers nearly 90,000 rights-of-way, of which over 48,000 are subject to a rental payment. Wyoming and New Mexico together account for slightly more than 30,000 of the rights-of-way subject to rent. Seventy-five percent of all right-of-way revenues were collected by five BLM State Offices. These five State Offices and the revenues collected are listed in Table 1 below.

TABLE 1.—RIGHT-OF-WAY RENTAL RECEIPTS FOR "TOP FIVE" BLM STATE OFFICES

State office	Rental receipts (FY 2005)
Nevada	$3,678,823
California	2,946,170
Wyoming	1,804,274
New Mexico	1,661,834
Arizona	1,272,795
Total	11,363,896

Non-linear rights-of-way, including communication site authorizations, account for nearly 3,500 authorizations generating over $5 million in revenue. Subtracting the communication site revenue from the $15 million reported for all rights-of-way results in an average rent of approximately $250 for linear rights-of-way. The average rental payment in 2005, including communication site authorizations, was approximately $320.

Description of Issues

The rental schedule is a cost-effective means for calculating and billing right-of-way holders for the use of public lands. In general, the rental schedule must be fair and reasonable and rent must be calculated in a consistent manner, depending on the type of authorized use.

To facilitate the billing process, the rental schedule itself must be a cost-effective way to administer the right-of-way program relative to the amount of revenue collected. In addition, right-of-way holders should be able to estimate rental payments and forecast changes in billed rent in accordance with the terms and conditions of the right-of-way. Updating the rental schedule formula will require changes to current rental payments; depending on the magnitude of the changes in various components of the formula, rents are likely to increase as a result of the general increase in land values. Impacts on groups or individual holders ultimately depend on the formula options considered.

As part of the rulemaking process, impacts of any increase in rent on current holders and small businesses will be evaluated. In addition, the proposed regulation will likely include a phase-in period and other provisions designed to facilitate the transition to the new rents. In cases where the applicant feels that the calculated rent is excessive, additional relief may include provisions for reduction or waiver of rent as is currently provided for by 43 CFR 2806.15 or for an alternative calculation of rent, based on an appraisal report. For such an

appraisal report to be admissible, the applicant would be required to follow applicable Departmental and Agency instructions, pay for the cost of the appraisal report, and ensure that the report meets Federal standards.

The BLM is considering using existing published information or statistical data for updating the rental schedule, such as information published by the National Agricultural Statistic Service (NASS). NASS publishes two reports: (1) The Census of Agriculture published every five years (Five Year Census), and (2) the annual Land Values and Cash Rents Summary (Annual Report).

The Five Year Census includes land values by county for each state. The land values are reported for cropland, woodland, permanent pasture, and rangeland and includes buildings.

The NASS data in the Annual Report includes state average pastureland values. The statewide average for pastureland may approximate rural agricultural types of land (woodlands and rangelands) that are administered by the BLM. You can find more detailed information about these two reports at the NASS Web site at: *http://www.nass.usda.gov/index.asp*.

III. Description of Information Requested

The BLM is particularly interested in receiving comments on the following questions:

1. What available published information, statistical data, or reports should BLM use to update the current linear right-of-way rental fee Zone Values?

2. What, if any, other terms, *e.g.*, impact adjustment or rate of return, used in the 1987 rental formula should BLM update, clarify, or revise? Should the one-year Treasury Rate (rate of return) used in the current formula, *i.e.*, 6.41 percent, be revised to reflect the current rate? If yes, should the rate be updated annually?

3. What, if any, provisions should BLM include in the proposed regulation to provide relief from large, unexpected increases in individual rental payments?

4. How should the number of rental zones be changed in the new linear right-of-way rental schedule, if at all?

5. Should the new linear right-of-way rental schedule split some states and counties into more than one zone?

6. Should the new linear right-of-way rental schedule apply to BLM-administered lands in Alaska?

The BLM further solicits public comments on other approaches for updating the 1987 linear right-of-way rental schedule. Other suggestions will be considered inasmuch as they may facilitate updating the current schedule.

Dated: April 17, 2006.

Chad Calvert,

Acting Assistant Secretary of the Interior.

[FR Doc. E6–6338 Filed 4–26–06; 8:45 am]

BILLING CODE 4310–84–P

Notices

Federal Register
Vol. 71, No. 81
Thursday, April 27, 2006

This section of the FEDERAL REGISTER contains documents other than rules or proposed rules that are applicable to the public. Notices of hearings and investigations, committee meetings, agency decisions and rulings, delegations of authority, filing of petitions and applications and agency statements of organization and functions are examples of documents appearing in this section.

COMMISSION ON CIVIL RIGHTS

Sunshine Act; Meeting

DATE AND TIME: Friday, May 5, 2006, 9:30 a.m., Commission Briefing and Meeting.

PLACE: U.S. Commission on Civil Rights, 624 Ninth Street, NW., Room 540, Washington, DC 20425.

STATUS:

Briefing Agenda

Commission Briefing: The Effectiveness of Historically Black Colleges and Universities

- Introductory Remarks by Chairman
- Speakers' Presentations
- Questions by Commissioners and Staff Director
- Annual Program Planning

CONTACT PERSON FOR FURTHER INFORMATION: Audrey Wright, Office of the Staff Director (202) 376–7700.

Kenneth L. Marcus,
Staff Director, Acting General Counsel.

[FR Doc. 06–4016 Filed 4–25–06; 11:53 am]

BILLING CODE 6335–01–M

COMMISSION ON CIVIL RIGHTS

Sunshine Act; Meetings

DATE AND TIME: Thursday, May 4, 2006, 3 p.m., Commission Meeting.

PLACE: U.S. Commission on Civil Rights, 624 Ninth Street, NW., Room 540, Washington, DC 20425.

STATUS:

Agenda

I. Approval of Agenda.
II. Approval of Minutes of March 10, April 3, and April 7, 2006 Meetings.
III. Announcements.
IV. Staff Director's Report.
V. Program Planning.
- Voting Rights Act Statutory Report.
- Report from the Briefing on the Native Hawaiian Government Reorganization Act.
- Report from the Briefing on Disparity Studies.
- Annual Program Planning.

VI. Management and Operations
- Web site: Posting Commissioner letters to the U.S. Department of Education expressing concerns with the American Bar Association's new diversity standards and regarding the ABA's petition for renewal of reaccreditation authority.

VII. State Advisory Committee Issues.
- Recharter Packages.

VIII. Future Agenda Items.

Any business not completed at the meeting on Thursday, May 4, 2006, may be addressed on Friday, May 5, 2006, following the briefing.

CONTACT PERSON FOR FURTHER INFORMATION: Audrey Wright, Office of the Staff Director (202) 376–7700.

Kenneth L. Marcus,
Staff Director, Acting General Counsel.

[FR Doc. 06–4017 Filed 4–25–06; 11:53 am]

BILLING CODE 6335–01–M

DEPARTMENT OF COMMERCE

International Trade Administration

[A–570–827]

Notice of Extension of Time Limit for the Final Results of Antidumping Duty Administrative Review: Certain Cased Pencils from the People's Republic of China

AGENCY: Import Administration, International Trade Administration, Department of Commerce.

EFFECTIVE DATE: April 27, 2006.

FOR FURTHER INFORMATION CONTACT: Paul Stolz or William Quigley, AD/CVD Operations, Office 8, Import Administration, International Trade Administration, U.S. Department of Commerce, 14th Street and Constitution Avenue, NW, Washington, DC 20230; telephone: (202) 482–4474 and (202) 482–4551, respectively.

SUPPLEMENTARY INFORMATION:

Background

On December 28, 2005, the Department of Commerce (the Department) published in the **Federal Register** the preliminary results of the administrative review of the antidumping duty order on certain cased pencils from the People's Republic of China. *See Certain Cased Pencils from the People's Republic of China; Preliminary Results of Antidumping Duty Administrative Review and Intent to Rescind in Part*, 70 FR 76755 (December 28, 2005). Pursuant to section 751(a)(3)(A) of the Tariff Act of 1930, as amended (the Act), the final results are currently due on April 27, 2006.

Extension of Time Limit for Final Results

Section 751(a)(3)(A) of the Act requires the Department to issue the final results in an administrative review within 120 days of the publication date of the preliminary results. However, if it is not practicable to complete the review within this time period, the Department may extend the time limit for the final results to 180 days. The Department has determined that, due to the complexity of the issues raised by the parties regarding wood loss and the surrogate value for pencil cores, it is not practicable to complete this review within the time limits mandated by section 751(a)(3)(A) of the Act and 19 CFR 351.213(h)(1). Therefore, the Department is extending the time limit for the completion of these final results by 60 days. Accordingly, the final results of this review will now be due no later than June 26, 2006.

This notice is published in accordance with section 751(a)(3)(A) of the Act and 19 CFR 351.213(h)(2).

Dated: April 21, 2006.

Stephen J. Claeys,
Deputy Assistant Secretary for Import Administration.

[FR Doc. E6–6367 Filed 4–26–06; 8:45 am]

BILLING CODE 3510–DS–S

DEPARTMENT OF COMMERCE

International Trade Administration

A–570–886

Polyethylene Retail Carrier Bags from the People's Republic of China: Extension of Time Limit for the Preliminary Results of Antidumping Duty Administrative Review

AGENCY: Import Administration, International Trade Administration, Department of Commerce.

EFFECTIVE DATE: April 27, 2006.

FOR FURTHER INFORMATION CONTACT: Laurel LaCivita or Matthew Quigley, AD/CVD Operations, Office 8, Import Administration, International Trade Administration, U.S. Department of Commerce, 14th Street and Constitution Avenue, NW, Washington, DC 20230; telephone (202) 482–4243 or (202) 482–4551, respectively.

SUPPLEMENTARY INFORMATION:

Background

On September 28, 2005, the Department of Commerce (''the Department'') published in the **Federal Register** a notice of initiation of the antidumping duty administrative review of Polyethylene Retail Carrier Bags (''PRCBs'') from the People's Republic of China (''PRC'') for the period January 24, 2004, through July 31, 2005. *See Initiation of Antidumping and Countervailing Duty Administrative Reviews and Request for Revocation in Part*, 70 FR 56631 (September 28, 2005). The preliminary results of review are currently due no later than May 3, 2006.

Extension of Time Limit for Preliminary Results

Section 751(a)(3)(A) of the Tariff Act of 1930, as amended (''the Act), requires the Department to make a preliminary determination within 245 days after the last day of the anniversary month of an order for which a review is requested. Section 751(a)(3)(A) of the Act further states that, if it is not practicable to complete the review within the time specified, the administering authority may extend the 245-day period to issue its preliminary results by up to 120 days. Completion of the preliminary results of this review within the 245-day period is not practicable because the Department needs additional time to analyze a significant amount of information pertaining to each company's sales practices, factors of production, corporate relationships, and to review responses to supplemental questionnaires.

Because it is not practicable to complete this review within the time specified under the Act, we are extending the time period for issuing the preliminary results of review by 110 days until August 21, 2006, in accordance with section 751(a)(3)(A) of the Act. The final results continue to be due 120 days after the publication of the preliminary results of review.

Dated: April 21, 2006.

Stephen J. Claeys,

Deputy Assistant Secretary for Import Administration.

[FR Doc. E6–6368 Filed 4–26–06; 8:45 am]

BILLING CODE 3510–DS–S

DEPARTMENT OF COMMERCE

International Trade Administration

A–570–879

Notice of Extension of Time Limit for the Final Results of the Antidumping Administrative Review of Polyvinyl Alcohol from the People's Republic of China

AGENCY: Import Administration, International Trade Administration, Department of Commerce.

EFFECTIVE DATE: April 27, 2006.

FOR FURTHER INFORMATION CONTACT: Lilit Astvatsatrian, AD/CVD Operations, Office 8, Import Administration, International Trade Administration, U.S. Department of Commerce, 14th Street and Constitution Avenue, NW, Washington, DC 20230; telephone: (202) 482–6412.

SUPPLEMENTARY INFORMATION:

Background

On November 7, 2005, the Department of Commerce (''the Department'') published the preliminary results of the administrative review of the antidumping duty order on polyvinyl alcohol (''PVA'') from the People's Republic of China (''PRC''), covering the period August 11, 2003, through September 30, 2004. *See Polyvinyl Alcohol from the People's Republic of China: Preliminary Results of Antidumping Duty Administrative Review*, 70 FR 67434 (November 7, 2005) (''*Preliminary Results*''). In the *Preliminary Results*, we stated that we would make our final determination for the antidumping duty review no later than 120 days after the date of publication of the preliminary results (*i.e.*, March 7, 2006).

Extension of Time Limit of Final Results

Section 751(a)(3)(A) of the Tariff Act of 1930, as amended (''the Act''), requires the Department to issue the final results in an administrative review within 120 days of the publication date of the preliminary results. However, if it is not practicable to complete the review within this time period, the Department may extend the time limit for the final results to 180 days. On February 27, 2006, the Department published in the **Federal Register** a notice extending the time limit for the final results of the administrative review from March 7, 2006, to April 6, 2006. *See Notice of Extension of Time Limit for the Antidumping Duty Administrative Review of Polyvinyl Alcohol from the People's Republic of China*, 71 FR 9781 (February 27, 2006). On March 29, 2006, the Department published in the **Federal Register** a notice extending the time limit for the final results of the administrative review from April 6, 2006, to April 21, 2006. *See Notice of Extension of Time Limit for the Final Results of the Antidumping Administrative Review of Polyvinyl Alcohol from the People's Republic of China*, 71 FR 15697 (March 29, 2006). The final results of review are currently due no later than April 21, 2006. However, completion of the final results by April 21, 2006, is not practicable because this review involves certain complex issues, including examination of the co–product allocation methodology, application of by–product credits, and the valuation of natural gas and certain other factors.

Therefore, in accordance with section 751(a)(3)(A) of the Act, the Department is now fully extending the time period for issuing these final results of review until May 6, 2006. However, because May 6, 2006, falls on a Saturday, the final results will be due on May 8, 2006, the next business day.

Dated: April 21, 2006.

Stephen J. Claeys,

Deputy Assistant Secretary for Import Administration.

[FR Doc. E6–6365 Filed 4–26–06; 8:45 am]

BILLING CODE 3510–DS–S

DEPARTMENT OF COMMERCE

International Trade Administration

A–570–890

Wooden Bedroom Furniture from The People's Republic of China: Notice of Court Decision Not in Harmony

AGENCY: Import Administration, International Trade Administration, U.S. Department of Commerce.

SUMMARY: On April 5, 2006, the United States Court of International Trade (''Court'') sustained the final remand determination made by the Department of Commerce (''the Department'') pursuant to the Court's remand of the amended final determination of the investigation of wooden bedroom furniture from the People's Republic of China. *See Guangzhou Maria Yee Furnishings Ltd., et. al. v. United States*, Ct. No. 05–00065, Slip Op. 06–44 (Ct. Int'l Trade April 5, 2006) (''*Maria Yee Remand II*''). This case arises out of the Department's *Final Determination of Sales at Less Than Fair Value: Wooden Bedroom Furniture From the People's Republic of China*, 69 FR 67313 (November 17, 2004), as amended, 70

FR 329 (January 4, 2005) (''*Final Determination*''). The final judgment in this case was not in harmony with the Department's *Final Determination*.

EFFECTIVE DATE: April 17, 2006.

FOR FURTHER INFORMATION CONTACT: Will Dickerson, AD/CVD Operations, Office 8, Import Administration, International Trade Administration, U.S. Department of Commerce, 14th Street and Constitution Avenue, NW, Washington DC 20230; telephone (202) 482–1778.

SUPPLEMENTARY INFORMATION:

Background

In *Guangzhou Maria Yee Furnishings, Ltd., et al. v. United States*, Court No. 05–00065, Slip Op. 05–158 (CIT December 14, 2005) (''*Maria Yee Remand*''), the Court remanded the Department's determination to reject, as untimely, certain information submitted by Guangzhou Maria Yee Furnishings Ltd., et al. (''Maria Yee''). The Court found that the Department's method of notice to parties of the requirement and deadline to submit a response to Section A of the Department's questionnaire was not reasonable, and remanded this case to the Department for further consideration consistent with the Court's opinion, and in light of the Court's decision in *Decca Hospitality Furnishings, LLC v. United States*, Court No. 05–00002, Slip Op. 05–100 (CIT August 23, 2005) (''*Decca*'')

On February 10, 2006, the Department issued its draft results of redetermination pursuant to remand for comment by the interested parties. On February 14, 2006, Maria Yee submitted comments in response to the Department's draft results of redetermination. No other party filed comments. On March 1, 2006, the Department issued its final results of redetermination pursuant to remand to the Court. The remand redetermination explained that, in accordance with the Court's opinion, the Department must analyze the evidence presented by Maria Yee to determine whether it is eligible for a separate rate. Accordingly, on December 27, 2005, the Department reopened the record and requested that Maria Yee re–submit a copy of its initial July 2, 2004, submission. On December 28, 2005, Maria Yee re–submitted a copy of its initial July 2, 2004, submission. Additionally, the Department issued one supplemental questionnaire to Maria Yee to address a few deficiencies found in Maria Yee's December 28, 2005, submission. Maria Yee submitted timely and complete responses to these questionnaires. Based on our analysis of Maria Yee's evidence, we determined that Maria Yee qualifies for a separate rate in the investigation of wooden bedroom furniture from the PRC. *See Final Results of Redetermination Pursuant to Court Remand*, November 7, 2005.

On April 5, 2006, the Court ordered that the Department's remand determination is supported by substantial evidence, and affirmed the Department's remand results in their entirety. *See Maria Yee Remand II*. The granting of a separate rate to Maria Yee changes Maria Yee's antidumping duty rate from the PRC–wide rate of 198.08 percent to the Section A respondent rate of 6.65 percent.

Timken Notice

In its decision in *Timken Co. v. United States*, 893 F.2d 337, 341 (Fed. Cir. 1990) (''*Timken*''), the United States Court of Appeals for the Federal Circuit held that, pursuant to section 516A(e) of the Tariff Act of 1930, as amended (''the Act''), the Department must publish a notice of a court decision that is not ''in harmony'' with a Department determination, and must suspend liquidation of entries pending a ''conclusive'' court decision. The Court's decision in *Maria Yee Remand II* constitutes a final court decision that is not in harmony with the Department's final determination of sales at less than fair value. This notice is published in fulfillment of the publication requirements of *Timken*. Accordingly, the Department will continue the suspension of liquidation of the subject merchandise pending the expiration of the period of appeal, or, if appealed, upon a final and conclusive court decision.

This notice is issued and published in accordance with section 516A(c)(1) of the Act.

Dated: April 20, 2006.

Joseph A. Spetrini,

Acting Assistant Secretary for Import Administration.

[FR Doc. E6–6369 Filed 4–26–06; 8:45 am]

BILLING CODE 3510–DS–S

DEPARTMENT OF COMMERCE

National Oceanic and Atmospheric Administration

Availability of Seats for the Channel Islands National Marine Sanctuary Advisory Council

AGENCY: National Marine Sanctuary Program (NMSP), National Ocean Service (NOS), National Oceanic and Atmospheric Administration, Department of Commerce (DOC).

ACTION: Notice and request for applications.

SUMMARY: The Channel Islands National Marine Sanctuary (CINMS) is seeking applicants for the following vacant seats on its Sanctuary Advisory Council (Council): Commercial Fishing member, Conservation alternate, Public-At-Large member, Public-At-Large alternate, Research member, and Tourism member. Applicants are chosen based upon: their particular expertise and experience in relation to the seat for which they are applying, community and professional affiliations, views regarding the protection and management of marine resources, and the length of residence in the communities located near the Sanctuary. Applicants who are chosen as members should expect to serve 2-year terms, pursuant to the Council's Charter.

DATES: Applications are due by June 26, 2006.

ADDRESSES: Application kits may be obtained from Dani Lipski, Channel Islands National Marine Sanctuary, 113 Harbor Way Suite 150 Santa Barbara, CA 93109–2315. Completed applications should be sent to the same address.

FOR FURTHER INFORMATION CONTACT: Michael Murray, Channel Islands National Marine Sanctuary, 113 Harbor Way Suite 150 Santa Barbara, CA 93109–2315, 805–966–7107 extension 464, *michael.murray@noaa.gov.*

SUPPLEMENTARY INFORMATION: The CINMS Advisory Council was originally established in December 1998 and has a broad representation consisting of 21 members, including ten government agency representatives and eleven members from the general public. The Council functions in an advisory capacity to the Sanctuary Superintendent. The Council works in concert with the Sanctuary Superintendent by keeping him or her informed about issues of concern throughout the Sanctuary, offering recommendations on specific issues, and aiding the Superintendent in achieving the goals of the Sanctuary program. Specifically, the Council's objectives are to provide advice on: (1) Protecting natural and cultural resources and identifying and evaluating emergent or critical issues involving Sanctuary use or resources; (2) Identifying and realizing the Sanctuary's research objectives; (3) Identifying and realizing educational opportunities to increase the public knowledge and stewardship of the Sanctuary environment; and (4)

Assisting to develop an informed constituency to increase awareness and understanding of the purpose and value of the Sanctuary and the National Marine Sanctuary Program.

Authority: 16 U.S.C. 1431, *et seq.*

(Federal Domestic Assistance Catalog Number 11.429 Marine Sanctuary Program)

Dated: April 18, 2006.

Daniel J. Basta,

Director, National Marine Sanctuary Program, National Ocean Service, National Oceanic and Atmospheric Administration.

[FR Doc. 06–3952 Filed 4–26–06; 8:45am]

BILLING CODE 3510–NK–M

DEPARTMENT OF COMMERCE

National Oceanic and Atmospheric Administration

Hydrographic Services Review Panel Meeting

AGENCY: National Ocean Service, National Oceanic and Atmospheric Administration (NOAA), Department of Commerce.

ACTION: Notice of open meeting.

SUMMARY: The Hydrographic Services Review Panel (HSRP) was established by the Secretary of Commerce to advise the Under Secretary of Commerce for Oceans and Atmosphere on matters related to the responsibilities and authorities set forth in section 303 of the Hydrographic Services Improvement Act of 1998, its amendments, and such other appropriate matters that the Under Secretary refers to the Panel for review and advice.

Date and Time: The meeting will be held Thursday, May 25, 2006, from 8:30 a.m. to 4:30 p.m.

Location: The Consortium for Oceanographic Research and Education, 1201 New York Avenue, NW., Suite 420, Washington, DC 20005 (202) 332–0063. The times and agenda topics are subject to change. Refer to the Web site listed below for the most up-to-date meeting agenda.

FOR FURTHER INFORMATION CONTACT: Captain Roger L. Parsons, NOAA, Designated Federal Official (DFO), Office of Coast Survey, National Ocean Service (NOS), NOAA (N/CS), 1315 East West Highway, Silver Spring, Maryland 20910; Telephone: 301–713–2770, Fax: 301–713–4019; e-mail: *Hydroservices.panel@noaa.gov* or visit the NOAA HSRP Web site at *http://nauticalcharts.noaa.gov/ocs/hsrp/hsrp.htm.*

SUPPLEMENTARY INFORMATION: The meeting will be open to the public and verbal comments and questions will be accepted at the end of the day with a 30-minute period that will be extended if needed. Each individual or group making a verbal presentation will be limited to a total time of five (5) minutes. Written comments (at least 30 copies) should be submitted to the DFO by May 18, 2006. Written comments received by the DFO after May 18, 2006, will be distributed to the HSRP, but may not be reviewed prior to the meeting date. Approximately 20 seats will be available for the public, on a first-come, first-served basis.

Matters to Be Considered: (1) Deliberations on HSRP Workgroup Recommendations Regarding NOAA-related Issues for Consideration by the Committee on the Marine Transportation System (CMTS) and NOAA's Navigation Services Role in Responding to Incidents of National Significance, (2) NOAA's Navigation Services Priorities Relative to the Integrated Ocean Observing System (IOOS), (3) Recommended Revisions to the Hydrographic Services Improvement Act of 2002 (which expires in 2007) and, (4) Public Statements.

Dated: April 14, 2006.

Roger L. Parsons,

Director, Office of Coast Survey, National Ocean Service, National Oceanic and Atmospheric Administration.

[FR Doc. E6–6310 Filed 4–26–06; 8:45 am]

BILLING CODE 3510–JE–P

DEPARTMENT OF DEFENSE

Office of the Secretary

[DOD–2006–OS–0070]

Base Closure and Realignment

AGENCY: Department of Defense, Office of Economic Adjustment.

ACTION: Notice.

SUMMARY: This Notice is provided pursuant to section 2905(b)(7)(B)(ii) of the Defense Base Closure and Realignment Act of 1990. It provides a partial list of military installations closing or realigning pursuant to the 2005 Defense Base Closure and Realignment (BRAC) Report. It also provides a corresponding listing of the Local Redevelopment Authorities (LRAs) recognized by the Secretary of Defense, acting through the Department of Defense Office of Economic Adjustment (OEA), as well as the points of contact, addresses, and telephone numbers for the LRAs for those installations. Representatives of state and local governments, homeless providers, and other parties interested in the redevelopment of an installation should contact the person or organization listed. The following information will also be published simultaneously in a newspaper of general circulation in the area of each installation. There will be additional Notices providing this same information about LRAs for other closing or realigning installations where surplus government property is available as those LRAs are recognized by the OEA.

EFFECTIVE DATE: April 27, 2006.

FOR FURTHER INFORMATION CONTACT: Director, Office of Economic Adjustment, Office of the Secretary of Defense, 400 Army Navy Drive, Suite 200, Arlington, VA 22202–4704, (703) 604–6020.

Local Redevelopment Authorities (LRAs) for Closing and Realigning Military Installations

California

Installation Name: Onizuka Air Force Station.
LRA Name: City of Sunnyvale.
Point of Contact: Mr. Eric DeWees, Reuse Coordinator, City of Sunnyvale, Office of the City Manager.
Address: 456 West Olive Avenue, Sunnyvale, CA 94086.
Phone: (408) 730–7739.

Installation Name: Riverbank Army Ammunition Plant.
LRA Name: City County of Riverbank and the District 1 Board Supervisor of Stanislaus County.
Point of Contact: Ms. Margaret Silveira, Director of Housing and Economic Development, City of Riverbank.
Address: 6707 Third Street, Riverbank, CA 95367–2396.
Phone: (209) 863–7129.

Colorado

Installation Name: Buckley Annex.
LRA Name: Lowry Economic Redevelopment Authority.
Point of Contact: Mr. Thomas O. Markham, Executive Director.
Address: 555 Unita Way, Denver, CO 80230.
Phone: (303) 343–0276.

District of Columbia

Installation Name: Walter Reed Army Medical Center.
LRA Name: Government of the District of Columbia.
Point of Contact: Mr. Stanley Jackson, Deputy Mayor for Planning and Economic Development, District of Columbia.
Address: 1350 Pennsylvania Avenue, NW., Suite 317, Washington, DC 20004.

Phone: (202) 727–6365.

Georgia

Installation Name: Columbus U.S. Army Reserve Center #1.
LRA Name: Columbus Consolidated Government.
Point of Contact: Robert S. Poydasheff, Mayor of Columbus Consolidated Government.
Address: Post Office Box 1340, Columbus, GA 31902–1340.
Phone: (706) 653–4712.

Installation Name: Fort Gillem.
LRA Name: Forest Park/Fort Gillem Local Redevelopment Authority.
Point of Contact: Mr. Shane Short, Chairman.
Address: 2270 Mt. Zion Road, Jonesboro, GA 30236.
Phone: (678) 610–4021.

Indiana

Installation Name: Newport Chemical Depot.
LRA Name: Newport Chemical Depot Local Redevelopment Authority.
Point of Contact: Mr. Ed Cole, Executive Director, Vermillion County Economic Development Council.
Address: 2250 North Main Street, Clinton, IN 47842.
Phone: (765) 832–3870.

Ohio

Installation Name: Parrott U.S. Army Reserve Center Kenton.
LRA Name: Hardin County Local Redevelopment Authority.
Point of Contact: Mr. Russell Ludwig, Chairman.
Address: One Courthouse Square, Suite 100, Kenton, OH 43326.
Phone: (419) 674–2205.

Pennsylvania

Installation Name: Horsham Memorial U.S. Army Reserve Center.
LRA Name: Horsham Township Authority for NASJRB (Naval Air Station Joint Reserve Base).
Point of Contact: Mr. Michael J. McGee, Executive Director.
Address: 1025 Horsham Road, Horsham, PA 19044.
Phone: (215) 643–3131.

Installation Name: Naval Air Station Joint Reserve Base Willow Grove.
LRA Name: Horsham Township Authority for NASJRB (Naval Air Station Joint Reserve Base).
Point of Contact: Mr. Michael J. McGee, Executive Director.
Address: 1025 Horsham Road, Horsham, PA 19044.
Phone: (215) 643–3131.

Installation Name: Navy-Marine Corps Reserve Center Reading.
LRA Name: Reading Berks Public Safety Local Redevelopment Authority.
Point of Contact: Judith L. Schwank. County Commissioner Chair, County of Berks.
Address: Office of the Commissioners, Berks County Services Center—13th Floor, 633 Court Street, Reading, PA 19601–4310.
Phone: (610) 478–6100.

Michigan

Installation Name: U.S. Army Garrison Michigan (Selfridge).
LRA Name: Chesterfield Township Local Redevelopment Authority.
Point of Contact: Mr. Jim Ellis, Supervisor, Chesterfield Township.
Address: 47275 Sugarbush, Chesterfield Township, MI 48047.
Phone: (586) 949–0400.

Dated: April 21, 2006.

L.M. Bynum,
OSD Federal Register Liaison Officer, Department of Defense.

[FR Doc. 06–3978 Filed 4–26–06; 8:45am]

BILLING CODE 5001–06–M

DEPARTMENT OF DEFENSE

Office of the Secretary

Renewal of Department of Defense Federal Advisory Committees

AGENCY: DoD.

ACTION: Notice.

SUMMARY: Under the provisions of the Federal Advisory Committee Act of 1972, as amended (5 U.S.C. Appendix), the Department of Defense gives notice that the Defense Advisory Committee on Women in the Services, which is determined to be in the public interest, is hereby renewed on April 17, 2006. This committee provides necessary and valuable independent advice to the Secretary of Defense and other senior Defense officials in their respective areas of expertise.

It is a continuing DoD policy to make every effort to achieve a balanced membership on all DoD advisory committees. Each committee is evaluated in terms of the functional disciplines, levels of experience, professional diversity, public and private association, and similar characteristics required to ensure a high degree of balance is obtained.

FOR FURTHER INFORMATION CONTACT: Contact Frank Wilson, DoD Committee Management Officer, 703–601–2554.

Dated: April 20, 2006.

L.M. Bynum,
OSD Federal Register Liaison Officer, Department of Defense.

[FR Doc. 06–3979 Filed 4–26–06; 8:45 am]

BILLING CODE 5001–06–M

DEPARTMENT OF DEFENSE

Office of the Secretary

Meeting of the Uniform Formulary Beneficiary Advisory Panel

AGENCY: Department of Defense, Assistant Secretary of Defense (Health Affairs).

ACTION: Notice of meeting.

SUMMARY: This notice announces a meeting of the Uniform Formulary Beneficiary Advisory Panel. The panel will review and comment on recommendations made to the Director, TRICARE Management Activity, by the Pharmacy and Therapeutics Committee regarding the Uniform Formulary. The meeting will be open to the public. Seating is limited and will be provided only to the first 220 people signing in. All persons must sign in legibly. Notice of this meeting is required under the Federal Advisory Committee Act.

DATES: Thursday, June 29, 2006, from 8 a.m. to 4 p.m.

ADDRESSES: Naval Heritage Center Theater, 701 Pennsylvania Avenue, NW., Washington, DC 20004.

FOR FURTHER INFORMATION CONTACT: Mr. Rich Martel, TRICARE Management Activity, Pharmacy Operations Directorate, Beneficiary Advisory Panel, Suite 810, 5111 Leesburg Pike, Falls Church, VA 22041, telephone 703–681–0064 ext. 3672, fax 703–681–1242, or e-mail at *baprequests@tma.osd.mil.*

SUPPLEMENTARY INFORMATION: the Uniform Formulary Beneficiary Advisory Panel will only review and comment on the development of the Uniform Formulary as reflected in the recommendations of the DOD Pharmacy and Therapeutics (P&T) Committee coming out of that body's meeting in May 2006. The (P&T) Committee information and subject matter concerning drug classes reviewed for that meeting are available at *http://pec.ha.osd.mil.* Any private citizen is permitted to file a written statement with the advisory panel. Statements must be submitted electronically to *baprequests@tma.osd.mil* no later than June 22, 2006. Any private citizen is permitted to speak at the Beneficiary Advisory Panel meeting, time permitting. One hour will be reserved for public comments, and speaking

times will be assigned only to the first twelve citizens to sign up at the meeting, on a first-come, first-served basis. The amount of time allocated to a speaker will not exceed five minutes.

Dated: April 20, 2006.

L.M. Bynum,

OSD Federal Register Liaison Officer, DoD.

[FR Doc. 06–3977 Filed 4–26–06; 8:45am]

BILLING CODE 5001–06–M

DEPARTMENT OF EDUCATION

[CFDA No.: 84.224C]

Assistive Technology Act of 1998, as Amended—Assistive Technology Alternative Financing Program

AGENCY: Office of Special Education and Rehabilitative Services, Department of Education.

ACTION: Notice of intent to fund down the grant slate for the Assistive Technology Act of 1998, as Amended (AT Act)—Assistive Technology Alternative Financing Program (AFP).

SUMMARY: The Secretary intends to use the grant slate developed for the AT Act AFP in Fiscal Year (FY) 2005 to make new grant awards in FY 2006. The Secretary takes this action because a significant number of high-quality applications remain on the last year's grant slate and limited funding is available for new grant awards in FY 2006.

FOR FURTHER INFORMATION CONTACT: Jeremy Buzzell, U.S. Department of Education, 400 Maryland Avenue, SW., room 5025, Potomac Center Plaza, Washington, DC 20202–2800. Telephone: (202) 245–7319.

If you use a telecommunications device for the deaf (TDD), you may call the Federal Relay Service (FRS) at 1–800–877–8339.

Individuals with disabilities may obtain this document in an alternative format (*e.g.*, Braille, large print, audiotape, or computer diskette) on request to the program contact person listed in this section.

SUPPLEMENTARY INFORMATION:

Background

On June 30, 2005, we published a notice in the **Federal Register** (70 FR 37794) inviting applications for new awards under the AT Act AFP. This notice indicated that the selection criteria, absolute priority, competitive preference priorities, and application requirements contained in the notice would apply to the FY 2005 grant competition only.

We received a significant number of applications for AFP grants in FY 2005 and made eight new grant awards. Because some applications that met the same standard as those that received funding did not receive funding last year and limited funding is available for new awards under this program in FY 2006, we intend to select grantees in FY 2006 from the existing slate of applicants. This slate was developed during the FY 2005 competition using the selection criteria, absolute priority, competitive preference priorities, and application requirements included in the June 30, 2005, notice. No changes to the selection criteria, absolute priority, competitive preference priorities, or application requirements will be required by this action.

Program Authority: 29 U.S.C. 3001 *et seq.*

Electronic Access to This Document: You may view this document, as well as all other documents of this Department published in the **Federal Register**, in text or Adobe Portable Document Format (PDF) on the Internet at the following site: *http://www.ed.gov/news/fedregister.*

To use PDF you must have Adobe Acrobat Reader, which is available free at this site. If you have questions about using PDF, call the U.S. Government Printing Office (GPO), toll free, at 1–888–293–6498; or in the Washington, DC, area at (202) 512–1530.

Note: The official version of this document is the document published in the **Federal Register**. Free Internet access to the official edition of the **Federal Register** and the Code of Federal Regulations is available on GPO Access at: *http://www.gpoaccess.gov/nara/index.html.*

Dated: April 21, 2006.

John H. Hager,

Assistant Secretary for Special Education and Rehabilitative Services.

[FR Doc. E6–6340 Filed 4–26–06; 8:45 am]

BILLING CODE 4000–01–P

DEPARTMENT OF ENERGY

Office of Energy Efficiency and Renewable Energy

Energy Conservation Program: Proposed Information Collection

AGENCY: Office of Energy Efficiency and Renewable Energy, Department of Energy.

ACTION: Notice and request for comments.

SUMMARY: The Department of Energy (DOE) invites public comment on a proposed collection of information that DOE is developing for submission to the Office of Management and Budget (OMB) pursuant to the Paperwork Reduction Act of 1995. The proposed collection of information is in a final rule pertaining to test procedures for distribution transformers that DOE is publishing in the ''Rules'' section of today's **Federal Register**.

DATES: Consideration will be given to comments submitted by June 26, 2006.

ADDRESSES: Written comments may be submitted to: Department of Energy, Attn: Cyrus Nasseri, Office of Energy Efficiency and Renewable Energy (EE–2J), Forrestal Building, 1000 Independence Ave., SW., Washington, DC 20585. (202) 586–9138, E-mail: *cyrus.nasseri@ee.doe.gov*.

SUPPLEMENTARY INFORMATION:

Collection title: Test Procedures for Distribution Transformers.

Type of review: New collection.

OMB number: None.

Type of respondents: Manufacturers of low-voltage dry-type distribution transformers.

Estimated number of respondents: 57 companies.

Estimated total burden hours: 96 hours total per company per year; based on 56 hours of technician/technical work and 40 hours clerical work.

Frequency of recordkeeping or reporting: Recordkeeping: maintenance of (1) data and (2) calibration procedures and actions.

Abstract: DOE today is publishing a final rule that establishes test procedures for measuring the energy efficiency of distribution transformers, pursuant to sections 323(b)(10) and 346(a)(1) of the Energy Policy and Conservation Act. (42 U.S.C. 6293(b)(10) and 6317(a)(1)) (See ''Rules'' section of this issue of the **Federal Register**.) That rule contains the following recordkeeping requirements that must be approved by OMB pursuant to the Paperwork Reduction Act of 1995 (44 U.S.C. 3501 *et. seq.*) before manufacturers can be required to comply with them: (1) Section 431.197(a)(4)(i) would require manufacturers of distribution transformers to have records as to alternative efficiency determination methods available for DOE inspection; (2) section 6.2(f) of Appendix A to subpart K of Part 431 would require maintenance of calibration records; and (3) section 6.2(b) and (c) of Appendix A would require documentation of calibration procedures.

Request for Comments: Pursuant to 44 U.S.C. 3506(c)(2)(A), DOE invites comment on: (1) Whether the recordkeeping requirements in DOE's

final rule are necessary; (2) the accuracy of DOE's estimate of the burden of the proposed information collection; (3) ways to enhance the quality, utility, and clarity of the information to be collected; and (4) ways to minimize the burden of the collection of information on those who choose to respond. Additional information about DOE's proposed information collection may be obtained from the contact person named in this notice.

Issued in Washington, DC, on March 28, 2006.

Douglas L. Faulkner,

Acting Assistant Secretary, Energy Efficiency and Renewable Energy.

[FR Doc. 06–3164 Filed 4–26–06; 8:45 am]

BILLING CODE 6450–01–P

DEPARTMENT OF ENERGY

Federal Energy Regulatory Commission

[Docket No. RP00–305–026]

CenterPoint Energy-Mississippi River Transmission Corporation; Notice of Compliance Filing

April 20, 2006.

Take notice that on April 13, 2006, CenterPoint Energy-Mississippi River Transmission Corporation (MRT) tendered for filing as part of its FERC Gas Tariff, Third Revised Volume No. 1, Substitute Second Revised Sheet No. 10D, with an effective date of March 31, 2006.

MRT states that the filing is being made in compliance with the Commission's letter order dated March 31, 2006. MRT states that the purpose of this filing is to provide Substitute Second Revised Sheet No. 10D, which reflects the term of a negotiated rate agreement with Union Electric Company, d/b/a AmerenUE, which became effective March 31, 2006.

Any person desiring to protest this filing must file in accordance with Rule 211 of the Commission's Rules of Practice and Procedure (18 CFR 385.211). Protests to this filing will be considered by the Commission in determining the appropriate action to be taken, but will not serve to make protestants parties to the proceeding. Such protests must be filed in accordance with the provisions of section 154.210 of the Commission's regulations (18 CFR 154.210). Anyone filing a protest must serve a copy of that document on all the parties to the proceeding.

The Commission encourages electronic submission of protests in lieu of paper using the ''eFiling'' link at *http://www.ferc.gov.* Persons unable to file electronically should submit an original and 14 copies of the protest to the Federal Energy Regulatory Commission, 888 First Street, NE., Washington, DC 20426.

This filing is accessible on-line at *http://www.ferc.gov,* using the ''eLibrary'' link and is available for review in the Commission's Public Reference Room in Washington, DC. There is an ''eSubscription'' link on the Web site that enables subscribers to receive e-mail notification when a document is added to a subscribed docket(s). For assistance with any FERC Online service, please e-mail *FERCOnlineSupport@ferc.gov,* or call (866) 208–3676 (toll free). For TTY, call (202) 502–8659.

Magalie R. Salas,

Secretary.

[FR Doc. E6–6327 Filed 4–26–06; 8:45 am]

BILLING CODE 6717–01–P

DEPARTMENT OF ENERGY

Federal Energy Regulatory Commission

[Docket No. RP96–200–149]

CenterPoint Energy Gas Transmission Company; Notice of Negotiated Rate Filing

April 20, 2006.

Take notice that on March 30, 2006, CenterPoint Energy Gas Transmission Company (CEGT) tendered for filing and approval two negotiated rate agreements, one between CEGT and Oneok Energy Services Company, LP, and one between CEGT and Coral Energy Resources, L.P. CEGT has entered into agreements to provide parking service to these shippers under Rate Schedule PHS to be effective April 1, 2006.

Any person desiring to intervene or to protest this filing must file in accordance with Rules 211 and 214 of the Commission's Rules of Practice and Procedure (18 CFR 385.211 and 385.214). Protests will be considered by the Commission in determining the appropriate action to be taken, but will not serve to make protestants parties to the proceeding. Any person wishing to become a party must file a notice of intervention or motion to intervene, as appropriate. Such notices, motions, or protests must be filed in accordance with the provisions of Section 154.210 of the Commission's regulations (18 CFR 154.210). Anyone filing an intervention or protest must serve a copy of that document on the Applicant. Anyone filing an intervention or protest on or before the intervention or protest date need not serve motions to intervene or protests on persons other than the Applicant.

The Commission encourages electronic submission of protests and interventions in lieu of paper using the ''eFiling'' link at *http://www.ferc.gov.* Persons unable to file electronically should submit an original and 14 copies of the protest or intervention to the Federal Energy Regulatory Commission, 888 First Street, NE., Washington, DC 20426.

This filing is accessible on-line at *http://www.ferc.gov*, using the ''eLibrary'' link and is available for review in the Commission's Public Reference Room in Washington, DC. There is an ''eSubscription'' link on the Web site that enables subscribers to receive e-mail notification when a document is added to a subscribed docket(s). For assistance with any FERC Online service, please e-mail *FERCOnlineSupport@ferc.gov*, or call (866) 208–3676 (toll free). For TTY, call (202) 502–8659.

Magalie R. Salas,

Secretary.

[FR Doc. E6–6323 Filed 4–26–06; 8:45 am]

BILLING CODE 6717–01–P

DEPARTMENT OF ENERGY

Federal Energy Regulatory Commission

[Docket No. RP06–304–000]

Midwestern Gas Transmission Company; Notice of Proposed Changes in FERC Gas Tariff

April 20, 2006.

Take notice that on April 12, 2006, Midwestern Gas Transmission Company (Midwestern) tendered for filing to become part of its FERC Gas Tariff, First Revised Volume No. 1, the following tariff sheets to become effective May 12, 2006:

First Revised Sheet No. 270.03. Original Sheet No. 270.04.

Any person desiring to intervene or to protest this filing must file in accordance with Rules 211 and 214 of the Commission's Rules of Practice and Procedure (18 CFR 385.211 and 385.214). Protests will be considered by the Commission in determining the appropriate action to be taken, but will not serve to make protestants parties to the proceeding. Any person wishing to become a party must file a notice of intervention or motion to intervene, as

appropriate. Such notices, motions, or protests must be filed in accordance with the provisions of § 154.210 of the Commission's regulations (18 CFR 154.210). Anyone filing an intervention or protest must serve a copy of that document on the Applicant. Anyone filing an intervention or protest on or before the intervention or protest date need not serve motions to intervene or protests on persons other than the Applicant.

The Commission encourages electronic submission of protests and interventions in lieu of paper using the ''eFiling'' link at *http://www.ferc.gov.* Persons unable to file electronically should submit an original and 14 copies of the protest or intervention to the Federal Energy Regulatory Commission, 888 First Street, NE., Washington, DC 20426.

This filing is accessible on-line at *http://www.ferc.gov*, using the ''eLibrary'' link and is available for review in the Commission's Public Reference Room in Washington, DC. There is an ''eSubscription'' link on the Web site that enables subscribers to receive e-mail notification when a document is added to a subscribed docket(s). For assistance with any FERC Online service, please e-mail *FERCOnlineSupport@ferc.gov*, or call (866) 208–3676 (toll free). For TTY, call (202) 502–8659.

Magalie R. Salas,

Secretary.

[FR Doc. E6–6328 Filed 4–26–06; 8:45 am]

BILLING CODE 6717–01–P

DEPARTMENT OF ENERGY

Federal Energy Regulatory Commission

[Docket No. CP06–125–000]

New England Gas Company, a Division of Southern Union Company and The Narragansett Electric Company, d/b/a National Grid; Notice of Application

April 20, 2006.

Take notice that on April 10, 2006, New England Gas Company (NEGASCO), a division of Southern Union Company, and The Narragansett Electric Company, d/b/a National Grid (Narragansett) (together, Applicants), filed with the Federal Energy Regulatory Commission an abbreviated joint application pursuant to section 7(f) of the Natural Gas Act, as amended, for an order requesting that the Commission vacate NEGASCO's section 7(f) service area determination granted by the Commission in 2004; grant Narragansett a section 7(f) service area determination, identical to the section 7(f) service area determination now held by NEGASCO; declare that Narragansett qualifies as a local distribution company in its service area for purposes of section 311 of the Natural Gas Policy Act (NGPA); and grant Narragansett a waiver of the regulatory requirements ordinarily applicable to a ''natural gas company'' under the NGA and the NGPA, including, but not limited to, reporting and accounting requirements and charges. These requests are necessitated by the pending sale of NEGASCO's facilities to Narragansett. Upon completion of the sale, the Applicants state that NEGASCO will no longer provide any gas distribution services in the state of Rhode Island and Narragansett will become the only natural gas local distribution company in that state, as NEGASCO is now.

This application is on file with the Commission and open for public inspection. The filings are available for review at the Commission in the Public Reference Room or may be viewed on the Commission's Web site at *http://www.ferc.gov* using the ''eLibrary'' link. Enter the docket number excluding the last three digits in the docket number field to access the document. For assistance, please contact FERC Online Support at *FERCOnlineSupport@ferc.gov* or toll free at (866) 208–3676, or for TTY, contact (202) 502–8659.

Any questions regarding the application should be direct to Thomas E. Knight, counsel for NEGASCO, Locke Liddell & Sapp LLP, 901 Fifteenth Street, NW., Washington, DC 20005, 202–408–7451; or to Roxane Maywalt, counsel for Narragansett, National Grid USA Service Company, Inc., Law Dep't A3, 300 Erie Boulevard West, Syracuse, New York 13202, 315–428–5187.

Any person wishing to obtain legal status by becoming a party to the proceedings for this project should, on or before the below listed comment date, file with the Federal Energy Regulatory Commission, 888 First Street, NE., Washington, DC 20426, a motion to intervene in accordance with the requirements of the Commission's Rules of Practice and Procedure (18 CFR 385.214 or 385.211) and the Regulations under the NGA (18 CFR 157.10). A person obtaining party status will be placed on the service list maintained by the Secretary of the Commission and will receive copies of all documents filed by the applicant and by all other parties. A party must submit 14 copies of filings made with the Commission and must mail a copy to the applicant and to every other party in the proceeding. Only parties to the proceeding can ask for court review of Commission orders in the proceeding.

Motions to intervene, protests and comments may be filed electronically via the Internet in lieu of paper, see, 18 CFR 385.2001 (a)(1)(iii) and the instructions on the Commission's Web site under the ''e-Filing'' link. The Commission strongly encourages electronic filings.

Comment Date: May 11, 2006.

Magalie R. Salas,

Secretary.

[FR Doc. E6–6333 Filed 4–26–06; 8:45 am]

BILLING CODE 6717–01–P

DEPARTMENT OF ENERGY

Federal Energy Regulatory Commission

[Docket No. RP06–305–000]

Northern Natural Gas Company; Notice of Filing of DDVC and Penalty Revenue Crediting Report

April 20, 2006.

Take notice that on April 13, 2006, Northern Natural Gas Company (Northern) filed various schedules detailing the Penalty and DDVC revenues for the period November 1, 2004 through October 31, 2005 credited to shippers in accordance with section 57 of the General Terms and Conditions of its FERC Gas Tariff.

Any person desiring to intervene or to protest this filing must file in accordance with Rules 211 and 214 of the Commission's Rules of Practice and Procedure (18 CFR 385.211 and 385.214). Protests will be considered by the Commission in determining the appropriate action to be taken, but will not serve to make protestants parties to the proceeding. Any person wishing to become a party must file a notice of intervention or motion to intervene, as appropriate. Such notices, motions, or protests must be filed on or before the date as indicated below. Anyone filing an intervention or protest must serve a copy of that document on the Applicant. Anyone filing an intervention or protest on or before the intervention or protest date need not serve motions to intervene or protests on persons other than the Applicant.

The Commission encourages electronic submission of protests and interventions in lieu of paper using the ''eFiling'' link at *http://www.ferc.gov.* Persons unable to file electronically should submit an original and 14 copies of the protest or intervention to the Federal Energy Regulatory Commission,

888 First Street, NE., Washington, DC 20426.

This filing is accessible on-line at *http://www.ferc.gov,* using the ''eLibrary'' link and is available for review in the Commission's Public Reference Room in Washington, DC. There is an ''eSubscription'' link on the Web site that enables subscribers to receive e-mail notification when a document is added to a subscribed docket(s). For assistance with any FERC Online service, please e-mail *FERCOnlineSupport@ferc.gov*, or call (866) 208–3676 (toll free). For TTY, call (202) 502–8659.

Comment Date: 5 p.m. Eastern Time April 28, 2006.

Magalie R. Salas,

Secretary.

[FR Doc. E6–6331 Filed 4–26–06; 8:45 am]

BILLING CODE 6717–01–P

DEPARTMENT OF ENERGY

Federal Energy Regulatory Commission

[Docket No. RP85–60–018]

Overthrust Pipeline Company; Notice of Refund Report

April 20, 2006.

Take notice that on February 1, 2006, Overthrust Pipeline Company (Overthrust) tendered for filing its refund report. Overthrust states that the report documents refunds of amounts pertaining to and detailing the Deferred Income Tax refund payments for the year 2005.

Overthrust states that it is filing the refund report pursuant to a Commission's order dated May 21, 1991, ''Order Approving Settlement with Modifications'' in Docket Nos. RP85–60–000 and 002.

Any person desiring to protest this filing must file in accordance with Rule 211 of the Commission's Rules of Practice and Procedure (18 CFR 385.211). Protests to this filing will be considered by the Commission in determining the appropriate action to be taken, but will not serve to make protestants parties to the proceeding. Such protests must be filed on or before the date as indicated below. Anyone filing a protest must serve a copy of that document on all the parties to the proceeding.

The Commission encourages electronic submission of protests in lieu of paper using the ''eFiling'' link at *http://www.ferc.gov.* Persons unable to file electronically should submit an original and 14 copies of the protest to the Federal Energy Regulatory Commission, 888 First Street, NE., Washington, DC 20426.

This filing is accessible on-line at *http://www.ferc.gov,* using the ''eLibrary'' link and is available for review in the Commission's Public Reference Room in Washington, DC. There is an ''eSubscription'' link on the Web site that enables subscribers to receive e-mail notification when a document is added to a subscribed docket(s). For assistance with any FERC Online service, please e-mail *FERCOnlineSupport@ferc.gov,* or call (866) 208–3676 (toll free). For TTY, call (202) 502–8659.

Comment Date: 5 p.m. Eastern Time on April 26, 2006.

Magalie R. Salas,

Secretary.

[FR Doc. E6–6332 Filed 4–26–06; 8:45 am]

BILLING CODE 6717–01–P

DEPARTMENT OF ENERGY

Federal Energy Regulatory Commission

Notice of Filings

April 20, 2006.

Take notice that the Commission received the following electric rate filings

Docket Numbers: ER03–44–004.

Applicants: BOC Energy Services, Inc.

Description: BOC Energy Services Inc submits its petition for acceptance of its triennial market power analysis and market-based rate compliance filings.

Filed Date: 04/12/2006.

Accession Number: 20060419–0062.

Comment Date: 5 p.m. eastern time on Wednesday, May 3, 2006.

Docket Numbers: ER05–1076–003; ER05–1082–000; ER05–1082–003

Applicants: Carolina Power & Light Company; Progress Energy Carolinas, Inc.

Description: Carolina Power & Light Co dba Progress Energy Carolinas, Inc notifies FERC that they have completed the refunds required by Commission's 3/21/06 order.

Filed Date: 04/13/2006.

Accession Number: 20060419–0056.

Comment Date: 5 p.m. eastern time on Thursday, May 4, 2006.

Docket Numbers: ER06–553–001.

Applicants: American Electric Power Service Company.

Description: American Electric Power Service Co as agent for Indiana Michigan Power Co submits its compliance filing pursuant to the Commission's 3/28/06 order.

Filed Date: 04/13/2006.

Accession Number: 20060419–0055.

Comment Date: 5 p.m. eastern time on Thursday, May 4, 2006.

Docket Numbers: ER06–675–001.

Applicants: Louisville Gas & Electric Company.

Description: LG&E Energy LLC submits a revised letter agreement with East Kentucky Power Cooperative.

Filed Date: 04/10/2006.

Accession Number: 20060418–0353.

Comment Date: 5 p.m. eastern time on Monday, May 1, 2006.

Docket Numbers: ER06–840–000.

Applicants: Conectiv Energy Supply, Inc.

Description: Conectiv Energy Supply, Inc submits its request for authorization to make wholesale power sales to Potomac Electric Power Co.

Filed Date: 04/06/2006.

Accession Number: 20060419–0003.

Comment Date: 5 p.m. eastern time on Thursday, April 27, 2006.

Docket Numbers: ER06–856–000.

Applicants: Tucson Electric Power Company.

Description: Tucson Electric Power Co submits on behalf of the members of the Southwest Reserve Sharing Group an amendment to Exhibit A & Exhibit B of the SRSG Participation Agreement.

Filed Date: 04/13/2006.

Accession Number: 20060419–0044.

Comment Date: 5 p.m. eastern time on Thursday, May 04, 2006.

Docket Numbers: ER06–857–000.

Applicants: Energy Resource Management Corp.

Description: Energy Resources Management Corp submits a petition for acceptance of Initial Rate Schedule FERC 1, waivers and blanket authority.

Filed Date: 04/13/2006.

Accession Number: 20060419–0045.

Comment Date: 5 p.m. eastern time on Thursday, May 4, 2006.

Docket Numbers: ER06–858–000.

Applicants: Southern California Edison Company.

Description: Southern California Edison Co submits its Sunkist Wholesale Distribution Load Interconnection Facilities Agreement with the City of Corona, California.

Filed Date: 04/13/2006.

Accession Number: 20060419–0057.

Comment Date: 5 p.m. eastern time on Thursday, May 4, 2006.

Docket Numbers: ER06–859–000.

Applicants: California Independent System Operator Corporation.

Description: California Independent System Operator Corp submits an informational filing pursuant to Article IX, Section B of the 5/28/99 Stipulation and Agreement approved on 5/28/99.

Filed Date: 04/13/2006.
Accession Number: 20060419–0068.
Comment Date: 5 p.m. eastern time on Thursday, May 4, 2006.

Docket Numbers: ER06–860–000.
Applicants: Thoroughbred Generating Company.
Description: Thoroughbred Generating Co submits a notice of cancellation of its market-based rate tariff, Original Volume No. 1.
Filed Date: 04/13/2006.
Accession Number: 20060419–0058.
Comment Date: 5 p.m. eastern time on Thursday, May 4, 2006.

Docket Numbers: ER06–861–000.
Applicants: Deseret Generation & Transmission Co-operative, Inc.
Description: Deseret Generation & Transmission Co-operative, Inc submits an amendment to its currently-effective market-based rate tariff identified as FERC Electric Tariff, First Revised Volume 3 etc, effective 6/1/06.
Filed Date: 04/12/2006.
Accession Number: 20060419–0059.
Comment Date: 5 p.m. eastern time on Wednesday, May 3, 2006.

Docket Numbers: ER06–862–000.
Applicants: American Electric Power Service Company.
Description: Ohio Power Co et al submit their first version to the Interconnection Agreement with West Penn Power & Monongahela Power Co.
Filed Date: 04/12/2006.
Accession Number: 20060419–0060.
Comment Date: 5 p.m. eastern time on Wednesday, May 3, 2006.

Docket Numbers: ER06–863–000.
Applicants: PJM Interconnection, LLC.
Description: PJM Interconnection, LLC submits an unexecuted amended Network Integration Transmission Service Agreement with American Electric Power Co, effective 3/13/06.
Filed Date: 04/12/2006.
Accession Number: 20060419–0061.
Comment Date: 5 p.m. eastern time on Wednesday, May 3, 2006.

Docket Numbers: ER06–865–000; ER06–315–002.
Applicants: American Electric Power Company.
Description: American Electric Power Service Corp, agent for its affiliates Ohio Power Co et al requests acceptance of its third revised Interconnection and Local Delivery Agreement made pursuant to AEP companies' OATT etc.
Filed Date: 04/10/2006.
Accession Number: 20060414–0307.
Comment Date: 5 p.m. eastern time on Monday, May 1, 2006.

Docket Numbers: ER96–1085–008: ER96–1085–010; EL05–122–000.
Applicants: South Carolina Electric & Gas Company.
Description: South Carolina Electric & Gas Co submits a revised version of its Negotiated Market Sales Tariff, Fifth Revised Volume No. 2.
Filed Date: 04/12/2006.
Accession Number: 20060419–0053.
Comment Date: 5 p.m. eastern time on Wednesday, May 3, 2006.

Docket Numbers: ER96–1947–018.
Applicants: LS Power Marketing, LLC.
Description: LSPM submits its fourth revised market-based rate tariff and corrects an inadvertent omission in Section 6 of its tariff.
Filed Date: 04/14/2006.
Accession Number: 20060417–0330.
Comment Date: 5 p.m. eastern time on Friday, May 5, 2006.

Docket Numbers: ER97–4281–015; ER99–2161–006; ER99–3000–005; ER02–1572–003; ER02–1571–003; ER00–2810–004; ER99–4359–003; ER99–4358–003; ER99–2168–006; ER99–2162–006; ER00–2807–004; ER00–2809–004; ER00–1259–005; ER99–4355–003; ER99–4356–003; ER01–1558–003; ER00–3160–005; ER99–4357–003; ER00–2313–005; ER02–2032–003; ER02–1396–003; ER02–1412–003; ER00–3718–004; ER99–3637–004; ER99–1712–006; ER00–2808–004
Applicants: NRG Power Marketing, Inc.; Arthur Kill Power LLC; Astoria Gas Turbines Power LLC; Bayou Cove Peaking Power LLC; Big Cajun I Peaking Power LLC; Conemaugh Power LLC; Connecticut Jet power LLC; Devon Power LLC; Dunkirk Power LLC; Huntley Power LLC; Indian River Power LLC; Keystone Power LLC; Louisiana Generating LLC; Middletown Power LLC; Montville Power LLC; NEO California Power LLC; NEO Freehold-Gen LLC, et al; Norwalk Power LLC; NRG Energy Center Paxton LLC; NRG New Jersey Energy Sales LLC; NRG Rockford LLC; NRG Rockford II LLC; NRG Sterlington Power LLC; Oswego Harbor Power LLC; Somerset Power LLC; Vienna Power LLC.
Description: NRG Energy, Inc submits updates to each of these tariffs incorporating the changes along with redline copies marking changes from the previously-filed versions under ER97–4281 et al.
Filed Date: 04/17/2006.
Accession Number: 20060418–0224.
Comment Date: 5 p.m. eastern time on Monday, May 8, 2006.

Docket Numbers: ER99–1115–010; ER99–1116–010; ER98–1127–010; ER98–1796–009.
Applicants: Cabrillo Power I LLC; Cabrillo Power II LLC; El Segundo Power, LLC; Long Beach Generation; NRG Energy, Inc.

Description: NRG Energy Inc submits updates to each of the WCP Project Companies tariffs, effective 4/18/06.

Filed Date: 04/17/2006.

Accession Number: 20060418–0225.

Comment Date: 5 p.m. eastern time on Monday, May 8, 2006.

Any person desiring to intervene or to protest in any of the above proceedings must file in accordance with Rules 211 and 214 of the Commission's Rules of Practice and Procedure (18 CFR 385.211 and § 385.214) on or before 5 p.m. eastern time on the specified comment date. It is not necessary to separately intervene again in a subdocket related to a compliance filing if you have previously intervened in the same docket. Protests will be considered by the Commission in determining the appropriate action to be taken, but will not serve to make protestants parties to the proceeding. Anyone filing a motion to intervene or protest must serve a copy of that document on the Applicant. In reference to filings initiating a new proceeding, interventions or protests submitted on or before the comment deadline need not be served on persons other than the Applicant.

The Commission encourages electronic submission of protests and interventions in lieu of paper, using the FERC Online links at *http://www.ferc.gov.* To facilitate electronic service, persons with Internet access who will eFile a document and/or be listed as a contact for an intervenor must create and validate an eRegistration account using the eRegistration link. Select the eFiling link to log on and submit the intervention or protests.

Persons unable to file electronically should submit an original and 14 copies of the intervention or protest to the Federal Energy Regulatory Commission, 888 First St., NE., Washington, DC 20426.

The filings in the above proceedings are accessible in the Commission's eLibrary system by clicking on the appropriate link in the above list. They are also available for review in the Commission's Public Reference Room in Washington, DC. There is an eSubscription link on the web site that enables subscribers to receive e-mail notification when a document is added to a subscribed dockets(s). For assistance with any FERC Online service, please e-mail *FERCOnlineSupport@ferc.gov.* or call

(866) 208–3676 (toll free). For TTY, call (202) 502–8659.

Magalie R. Salas,

Secretary.

[FR Doc. E6–6334 Filed 4–26–06; 8:45 am]

BILLING CODE 6717–01–P

DEPARTMENT OF ENERGY

Federal Energy Regulatory Commission

[Docket Nos. ER02–2074–002, et al.]

Alcoa Power Marketing, Inc., et al.; Electric Rate and Corporate Filings

April 20, 2006.

The following filings have been made with the Commission. The filings are listed in ascending order within each docket classification.

1. Alcoa Power Marketing, Inc., Alcoa Power Generating Inc.

[Docket Nos. ER02–2074–002, ER00–1372–003]

Take notice that on April 13, 2006, Alcoa Power Marketing, Inc. and Alcoa Power Generating Inc., tendered for filing their updated market analysis with respect to each company's authority to make sales at market-based rates.

Comment Date: 5 p.m. Eastern Time on April 28, 2006.

2. PacifiCorp

[Docket No. ER05–554–004]

Take notice that on April 3, 2006, PacifiCorp filed a supplemental compliance refund report pursuant to the Commission's August 25, 2005 letter order.

Comment Date: 5 p.m. Eastern Time on April 28, 2006.

3. PJM Interconnection, L.L.C.

[Docket No. ER06–657–001]

Take notice that April 14, 2006 PJM Interconnection, L.L.C. filed an amendment to its February 21, 2006 filing, an executed interconnection service agreement and an executed construction agreement with Bethlehem Renewable Energy L.L.C. and PPL Electric Utilities.

Comment Date: 5 p.m. Eastern Time on May 5, 2006.

4. Bear Energy LP

[Docket No. ER06–864–000]

Take notice that on April 13, 2006, Bear Energy LP tendered for filing a Notice of Succession as a result of a corporation name change and a revised Rate Schedule, reflecting the name change.

Comment Date: 5 p.m. Eastern Time on April 28, 2006.

Standard Paragraph

Any person desiring to intervene or to protest this filing must file in accordance with Rules 211 and 214 of the Commission's Rules of Practice and Procedure (18 CFR 385.211, 385.214). Protests will be considered by the Commission in determining the appropriate action to be taken, but will not serve to make protestants parties to the proceeding. Any person wishing to become a party must file a notice of intervention or motion to intervene, as appropriate. Such notices, motions, or protests must be filed on or before the comment date. On or before the comment date, it is not necessary to serve motions to intervene or protests on persons other than the Applicant.

The Commission encourages electronic submission of protests and interventions in lieu of paper using the ''eFiling'' link at *http://www.ferc.gov.* Persons unable to file electronically should submit an original and 14 copies of the protest or intervention to the Federal Energy Regulatory Commission, 888 First Street, NE., Washington, DC 20426.

This filing is accessible on-line at *http://www.ferc.gov*, using the ''eLibrary'' link and is available for review in the Commission's Public Reference Room in Washington, DC. There is an ''eSubscription'' link on the Web site that enables subscribers to receive e-mail notification when a document is added to a subscribed docket(s). For assistance with any FERC Online service, please e-mail *FERCOnlineSupport@ferc.gov*, or call (866) 208–3676 (toll free). For TTY, call (202) 502–8659.

Magalie R. Salas,

Secretary.

[FR Doc. E6–6335 Filed 4–26–06; 8:45 am]

BILLING CODE 6717–01–P

DEPARTMENT OF ENERGY

Federal Energy Regulatory Commission

Notice of Exemption Application Ready for Environmental Analysis, and Soliciting Comments, Terms and Conditions, and Recommendations

April 20, 2006.

Take notice that the following hydroelectric exemption application has been filed with the Commission and is available for public inspection.

a. *Type of Application:* 5-megawatt (MW) Exemption.

b. *Project:* West Valley A&B Hydro Project No. 12053–001.

c. *Date Filed:* July 18, 2003.

d. *Applicant:* Mr. Nicholas Josten.

e. *Location:* On the South Fork of the Pit River in Modoc County, California. The project would be located on approximately 31 acres of federal lands, managed by Forest Service and Bureau of Land Management.

f. *Filed Pursuant to:* Public Utility Regulatory Policies Act of 1978, 16 U.S.C. 2705, 2708.

g. *Applicant Contact:* Mr. Nicholas Josten, 2742 Saint Charles Ave, Idaho Falls, Idaho 83404.

h. *FERC Contact:* Alan Mitchnick, (202) 502–6074 or *alan.mitchnick@ferc.gov.*

i. Deadline for filing comments, recommendations, and terms and conditions is 60 days from the issuance date of this notice; reply comments are due 105 days from the issuance date of this notice. Under section 30(c) of the Federal Power Act, exemptions are subject to the mandatory conditioning authority of federal and state fish and wildlife agencies with respect to the mitigation of project impacts on fish and wildlife resources.

All documents (original and eight copies) should be filed with: Magalie R. Salas, Secretary, Federal Energy Regulatory Commission, 888 First Street, NE., Washington, DC 20426.

The Commission's Rules of Practice require all intervenors filing documents with the Commission to serve a copy of that document on each person on the official service list for the project. Further, if an intervenor files comments or documents with the Commission relating to the merits of an issue that may affect the responsibilities of a particular resource agency, they must also serve a copy of the document on that resource agency.

Comments, recommendations, and terms and conditions may be filed electronically via the Internet in lieu of paper. The Commission strongly encourages electronic filings. See 18 CFR 385.2001(a)(1)(iii) and the instructions on the Commission's Web site (*http://www.ferc.gov*) under the ''eFiling'' link.

j. This application has been accepted for filing and is now ready for environmental analysis.

k. The proposed project would consist of two developments, West Valley A and West Valley Alternative B–1. Alternative B–2 has been deleted from the proposed project (applicant's response to deficiencies, filed October 25, 2004).

West Valley A run-of river development would have a capacity of

1.0 MW and would consist of: (1) An existing concrete diversion structure; (2) an existing intake structure; (3) 11,600 feet of existing open canal; (4) a proposed concrete overflow structure; (5) proposed 2,800 feet of new canal; (6) a proposed 400-foot-long penstock; (7) a proposed powerhouse; (8) a proposed tailrace pipe; (9) a proposed 3,000-foot-long, 12.3-kilovolt (kV) transmission line; and (10) appurtenant facilities. The applicant estimates that the total average annual generation would be 3,300,000 kilowatt-hours (kWh).

West Valley Alternative B–1 run-of-river development would have a capacity of 1.36 MW and would consists of: (1) The existing West Valley Dam and outlet works; (2) a new bypass valve attached to the existing dam outlet pipe; (3) a proposed 2,850-foot-long penstock; (4) a proposed powerhouse; (5) a proposed tailrace canal; (6) a proposed 4.5-mile-long, 12.3-kV transmission line; and (7) appurtenant facilities. The applicant estimates that the total average annual generation would be 4,730,000 kWh.

l. A copy of the application is available for review at the Commission in the Public Reference Room or may be viewed on the Commission's Web site at *http://www.ferc.gov* using the ''eLibrary'' link. Enter the docket number excluding the last three digits in the docket number field to access the document. For assistance, contact FERC Online Support at *FERCOnlineSupport@ferc.gov* or toll-free at 1–866–208–3676, or for TTY, (202) 502–8659. A copy is also available for inspection and reproduction at the address in item g. above.

You may also register online at *http://www.ferc.gov/docs-filing/esubscription.asp* to be notified via e-mail of new filings and issuances related to this or other pending projects. For assistance, contact FERC Online Support.

All filings must (1) Bear in all capital letters the title ''COMMENTS'', ''REPLY COMMENTS'', ''RECOMMENDATIONS,'' or ''TERMS AND CONDITIONS.'' (2) set forth in the heading the name of the applicant and the project number of the application to which the filing responds; (3) furnish the name, address, and telephone number of the person submitting the filing; and (4) otherwise comply with the requirements of 18 CFR 385.2001 through 385.2005. All comments, recommendations, or terms and conditions must set forth their evidentiary basis and otherwise comply with the requirements of 18 CFR 4.34(b). Agencies may obtain copies of the application directly from the applicant. Each filing must be accompanied by proof of service on all persons listed on the service list prepared by the Commission in this proceeding, in accordance with 18 CFR 4.34(b), and 385.2010.

You may also register online at *http://www.ferc.gov/docs-filing/esubscription.asp* to be notified via e-mail of new filings and issuances related to this or other pending projects. For assistance, contact FERC Online Support.

m. Procedural schedule: the Commission staff proposes to issue one Environmental Assessment (EA) rather than issuing a draft and final EA. Staff intends to allow 30 days for entities to comment on the EA, and will take into consideration all comments received on the EA before final action is taken on the exemption application. The application will be processed according to the schedule, but revisions to the schedule may be made as appropriate:

Action	Date
Ready for Environmental Analysis Notice.	April 2006.
Cultural Resources Additional Information due.	July 30, 2006.
Notice of Availability of Environmental Assessment (EA).	September 2006.
Comments on EA due	October 2006.
Ready for Commission Decision on Application.	November 2006.

Magalie R. Salas,

Secretary.

[FR Doc. E6–6324 Filed 4–26–06; 8:45 am]

BILLING CODE 6717–01–P

DEPARTMENT OF ENERGY

Federal Energy Regulatory Commission

Notice of Application Accepted for Filing and Soliciting Motions To Intervene, Protests, and Comments

April 20, 2006.

Take notice that the following hydroelectric application has been filed with the Commission and is available for public inspection:

a. *Type of Application:* Preliminary Permit.

b. *Project No.:* 12635–000.

c. *Date filed:* January 3, 2006.

d. *Applicant:* Moriah Hydro Corporation.

e. *Name and Location of Project:* The proposed Mineville Pumped Storage Project would be located in the existing Old Bed, New Bed, and Harmony Mines within the town of Moriah in Essex County, New York. The mines are owned by X-Earth Corporation of Elizabethtown, New York, and by Rhodia Corporation of Cranbury, New Jersey.

f. *Filed Pursuant to:* Federal Power Act, 16 U.S.C. 791(a)–825(r).

g. *Applicant Contact:* Mr. James A. Besha, P.E., Moriah Hydro Corporation, c/o Albany Engineering Corporation, 455 New Karner Road, Albany, NY 12205, (518) 456–7712.

h. *FERC Contact:* Tom Papsidero, (202) 502–6002.

i. Deadline for filing motions to intervene, protests and comments: 60 days from the issuance date of this notice.

All documents (original and eight copies) should be filed with Magalie R. Salas, Secretary, Federal Energy Regulatory Commission, 888 First Street, NE., Washington, DC 20426. Comments, protests and interventions may be filed electronically via the Internet in lieu of paper; see 18 CFR 385.2001(a)(1)(iii) and the instructions on the Commission's Web site under the ''e-Filing'' link. The Commission strongly encourages electronic filings. Please include the project number (P–12635–000) on any comments or motions filed.

The Commission's Rules of Practice and Procedure require all intervenors filing documents with the Commission to serve a copy of that document on each person in the official service list for the project. Further, if an intervenor files comments or documents with the Commission relating to the merits of an issue that may affect the responsibilities of a particular resource agency, they must also serve a copy of the document on that resource agency.

j. Description of Project: The proposed pumped storage project would consist of the following: (1) An upper reservoir using the existing +200 level of the underground Harmony Mine having a surface area of 99 acres, with a storage capacity of 1,900 acre-feet and a normal water surface elevation of 200 feet NGVD, (2) a lower reservoir using the existing underground –1185 level of the Harmony Mine having a surface area of 75 acres, with a storage capacity of 2,500 acre-feet and a normal water surface elevation of –1,135 feet NGVD, (3) seven identical 1000-foot-long, 96-inch-diameter vertical bored penstocks with grouted steel casing, (4) a proposed powerhouse containing seven generating units having a total installed capacity of 189 MW; (5) a proposed 1-mile-long, 115 kV transmission line; and (6) appurtenant facilities.

The project would have an annual generation of 650 GWh, which would be sold to a local utility.

k. Location of Applications: A copy of the application is available for inspection and reproduction at the Commission in the Public Reference Room or may be viewed on the Commission's Web site at *http://www.ferc.gov* using the ''eLibrary'' link. Enter the docket number excluding the last three digits in the docket number field to access the document. For assistance, call toll-free 1–866–208–3676 or e-mail *FERCOnlineSupport@ferc.gov.* For TTY, call (202) 502–8659. A copy is also available for inspection and reproduction at the address in item g above.

l. Individuals desiring to be included on the Commission's mailing list should so indicate by writing to the Secretary of the Commission.

m. Competing Preliminary Permit—Anyone desiring to file a competing application for preliminary permit for a proposed project must submit the competing application itself, or a notice of intent to file such an application, to the Commission on or before the specified comment date for the particular application (see 18 CFR 4.36). Submission of a timely notice of intent allows an interested person to file the competing preliminary permit application no later than 30 days after the specified comment date for the particular application. A competing preliminary permit application must conform with 18 CFR 4.30(b) and 4.36.

n. Competing Development Application—Any qualified development applicant desiring to file a competing development application must submit to the Commission, on or before a specified comment date for the particular application, either a competing development application or a notice of intent to file such an application. Submission of a timely notice of intent to file a development application allows an interested person to file the competing application no later than 120 days after the specified comment date for the particular application. A competing license application must conform with 18 CFR 4.30(b) and 4.36.

o. Notice of Intent—A notice of intent must specify the exact name, business address, and telephone number of the prospective applicant, and must include an unequivocal statement of intent to submit, if such an application may be filed, either a preliminary permit application or a development application (specify which type of application). A notice of intent must be served on the applicant(s) named in this public notice.

p. Proposed Scope of Studies under Permit—A preliminary permit, if issued, does not authorize construction. The term of the proposed preliminary permit would be 36 months. The work proposed under the preliminary permit would include economic analysis, preparation of preliminary engineering plans, and a study of environmental impacts. Based on the results of these studies, the Applicant would decide whether to proceed with the preparation of a development application to construct and operate the project.

q. Comments, Protests, or Motions to Intervene—Anyone may submit comments, a protest, or a motion to intervene in accordance with the requirements of Rules of Practice and Procedure, 18 CFR 385.210, .211, .214. In determining the appropriate action to take, the Commission will consider all protests or other comments filed, but only those who file a motion to intervene in accordance with the Commission's Rules may become a party to the proceeding. Any comments, protests, or motions to intervene must be received on or before the specified comment date for the particular application.

Comments, protests and interventions may be filed electronically via the Internet in lieu of paper; See 18 CFR 385.2001(a)(1)(iii) and the instructions on the Commission's Web site under ''e-filing'' link. The Commission strongly encourages electronic filing.

r. Filing and Service of Responsive Documents—Any filings must bear in all capital letters the title ''COMMENTS'', ''NOTICE OF INTENT TO FILE COMPETING APPLICATION'', ''COMPETING APPLICATION'', ''PROTEST'', or ''MOTION TO INTERVENE'', as applicable, and the Project Number of the particular application to which the filing refers. Any of the above-named documents must be filed by providing the original and the number of copies provided by the Commission's regulations to: The Secretary, Federal Energy Regulatory Commission, 888 First Street, NE., Washington, DC 20426. An additional copy must be sent to Director, Division of Hydropower Administration and Compliance, Federal Energy Regulatory Commission, at the above-mentioned address. A copy of any notice of intent, competing application or motion to intervene must also be served upon each representative of the Applicant specified in the particular application.

s. Agency Comments—Federal, State, and local agencies are invited to file comments on the described application. A copy of the application may be obtained by agencies directly from the Applicant. If an agency does not file comments within the time specified for filing comments, it will be presumed to have no comments. One copy of an agency's comments must also be sent to the Applicant's representatives.

Magalie R. Salas,

Secretary.

[FR Doc. E6–6325 Filed 4–26–06; 8:45 am]

BILLING CODE 6717–01–P

DEPARTMENT OF ENERGY

Federal Energy Regulatory Commission

[Docket No. RM98–1–000]

Records Governing Off-the-Record Communications; Public Notice

April 20, 2006.

This constitutes notice, in accordance with 18 CFR 385.2201(b), of the receipt of prohibited and exempt off-the-record communications.

Order No. 607 (64 FR 51222, September 22, 1999) requires Commission decisional employees, who make or receive a prohibited or exempt off-the-record communication relevant to the merits of a contested proceeding, to deliver to the Secretary of the Commission, a copy of the communication, if written, or a summary of the substance of any oral communication.

Prohibited communications are included in a public, non-decisional file associated with, but not a part of, the decisional record of the proceeding. Unless the Commission determines that the prohibited communication and any responses thereto should become a part of the decisional record, the prohibited off-the-record communication will not be considered by the Commission in reaching its decision. Parties to a proceeding may seek the opportunity to respond to any facts or contentions made in a prohibited off-the-record communication, and may request that the Commission place the prohibited communication and responses thereto in the decisional record. The Commission will grant such a request only when it determines that fairness so requires. Any person identified below as having made a prohibited off-the-record communication shall serve the document on all parties listed on the official service list for the applicable proceeding in accordance with Rule 2010, 18 CFR 385.2010.

Exempt off-the-record communications are included in the

decisional record of the proceeding, unless the communication was with a cooperating agency as described by 40 CFR 1501.6, made under 18 CFR 385.2201(e)(1)(v).

The following is a list of off-the-record communications recently received by the Secretary of the Commission. The communications listed are grouped by docket numbers in ascending order. These filings are available for review at the Commission in the Public Reference Room or may be viewed on the Commission's Web site at *http://www.ferc.gov* using the eLibrary link. Enter the docket number, excluding the last three digits, in the docket number field to access the document. For assistance, please contact FERC, Online Support at *FERCOnlineSupport@ferc.gov* or toll free at (866) 208–3676, or for TTY, contact (202) 502–8659.

Docket number	Date received	Presenter or requester
Exempt:		
1. IS06–191–000	4–4–06	Hon. James W. Crawford, Jr.
2. IS06–191–000	4–4–06	Hon. Terry C. Burton.
3. P–459–128	4–3–06	Robert C. Burk.
4. P–459–128	4–3–06	Charles N. Clark.
5. P–459–128	4–3–06	Dr. Robert H. and Anna M. Fuchs.
6. P–459–128	4–3–06	Larry Oth/Brent Calvert.
7. P–459–128	4–10–06	Hon. Matt Blunt.
8. P–11841–002	4–14–06	Kenneth Hogan.

Magalie R. Salas,

Secretary.

[FR Doc. E6–6326 Filed 4–26–06; 8:45 am]

BILLING CODE 6717–01–P

ENVIRONMENTAL PROTECTION AGENCY

[EPA–HQ–OW–2005–0026; FRL–8162–4]

Tribal 106 Grant Guidance

AGENCY: Environmental Protection Agency (EPA).

ACTION: Notice of availability.

SUMMARY: This document provides notice of availability for public comment of the draft Guidance on Awards of Grants to Indian Tribes under Section 106 of the Clean Water Act for Fiscal Year 2007 and Future Years. This draft Guidance provides the Environmental Protection Agency and Tribes with a consistent framework of procedures and guidelines for awarding and administering grants to federally recognized Tribes under the authority of Section 106 of the Clean Water Act. Specifically, the draft Guidance will assist Tribal water quality program managers, staff, and other Tribal environmental decision-makers in designing and implementing an effective and successful water quality program utilizing Section 106 funds. The draft 106 Tribal Guidance is for Tribal water quality programs at all levels of sophistication and development. For new programs, it explains how to successfully initiate and develop a water quality program. For Tribes with well-established programs, it contains information on expanding a water quality program. To meet the needs of Tribes at all levels of development, the draft Guidance presents the basic steps a Tribe would take to collect the information it will need to make effective decisions about its program, its goals, and its future direction. The final Guidance will take effect for grants issued by the Environmental Protection Agency's Regional offices in fiscal year 2007. A Notice of its Availability will be published in the **Federal Register**. This action affects all Tribal environmental programs that receive Section 106 Tribal grants.

DATES: Comments must be received on or before June 26, 2006.

ADDRESSES: Submit your comments, identified by Docket ID No. EPA–HQ–OW–2005–0026, by one of the following methods:

- *www.regulations.gov:* Follow the on-line instructions for submitting comments.
- E-mail: *ow-docket@epa.gov* Attention Docket ID No. OW–2005–0026
- Fax: (202) 566–1749
- Mail: Water Docket, Environmental Protection Agency, Mailcode: 4101T, 1200 Pennsylvania Ave., NW., Washington, DC 20460.
- Hand Delivery: EPA Docket Center, EPA West, Room B102, 1301 Constitution Avenue, NW., Washington, DC, Attention Docket ID No. OW–2005–0026. Such deliveries are only accepted during the Docket's normal hours of operation, and special arrangements should be made for deliveries of boxed information.

Instructions: Direct your comments to Docket ID No. EPA–HQ–OW–2005–0026. EPA's policy is that all comments received will be included in the public docket without change and may be made available online at *www.regulations.gov*, including any personal information provided, unless the comment includes information claimed to be Confidential Business Information (CBI) or other information whose disclosure is restricted by statute. Do not submit information that you consider to be CBI or otherwise protected through *www.regulations.gov* or e-mail. The *www.regulations.gov* Web site is an ''anonymous access'' system, which means EPA will not know your identity or contact information unless you provide it in the body of your comment. If you send an e-mail comment directly to EPA without going through *www.regulations.gov*, your e-mail address will be automatically captured and included as part of the comment that is placed in the public docket and made available on the Internet. If you submit an electronic comment, EPA recommends that you include your name and other contact information in the body of your comment and with any disk or CD–ROM you submit. If EPA cannot read your comment due to technical difficulties and cannot contact you for clarification, EPA may not be able to consider your comment. Electronic files should avoid the use of special characters, any form of encryption, and be free of any defects or viruses. For additional information about EPA's public docket, visit the EPA Docket Center homepage at *http://www.epa.gov/epahome/dockets.htm.* For additional instructions on submitting comments, go to Unit I.1 of the **SUPPLEMENTARY INFORMATION** section of this document.

Docket: All documents in the docket are listed in the *www.regulations.gov* index. Although listed in the index,

some information is not publicly available, e.g., CBI or other information whose disclosure is restricted by statute. Certain other material, such as copyrighted material, will be publicly available only in hard copy. Publicly available docket materials are available either electronically in *www.regulations.gov* or in hard copy at the Water Docket, EPA/DC, EPA West, Room B102, 1301 Constitution Ave., NW., Washington, DC. The Public Reading Room is open from 8:30 a.m. to 4:30 p.m., Monday through Friday, excluding legal holidays. The telephone number for the Public Reading Room is (202) 566–1744, and the telephone number for the Water Docket is (202) 566–2426.

FOR FURTHER INFORMATION CONTACT:

Lena Ferris, Office of Water, Office of Wastewater Management, 4201M, Environmental Protection Agency, 1200 Pennsylvania Avenue, NW., Washington, DC 20460; telephone number: (202) 564–8831; fax number: (202) 501–2399; e-mail address: *ferris.lena@epa.gov.*

SUPPLEMENTARY INFORMATION:

I. General Information

Affected Entities: Tribes that are eligible to receive grants under Section 106 of the Clean Water Act.

1. *Submitting CBI.* Do not submit this information to EPA through *www.regulations.gov* or e-mail. Clearly mark the part or all of the information that you claim to be CBI. For CBI information on a disk or CD ROM that you mail to EPA, mark the outside of the disk or CD ROM as CBI and then identify electronically within the disk or CD ROM the specific information that is claimed as CBI. In addition to one complete version of the comment that includes information claimed as CBI, a copy of the comment that does not contain the information claimed as CBI must be submitted for inclusion in the public docket. Information so marked will not be disclosed except in accordance with procedures set forth in 40 CFR part 2.

2. *Tips for Preparing Your Comments.* When submitting comments, remember to:

- Identify the rulemaking by docket number and other identifying information (subject heading, **Federal Register** date, and page number).
- Follow directions—The agency may ask you to respond to specific questions or organize comments by referencing a Code of Federal Regulations (CFR) part or section number.
- Explain why you agree or disagree; suggest alternatives; and substitute language for your requested changes.
- Describe any assumptions and provide any technical information and/or data that you used.
- If you estimate potential costs or burdens, explain how you arrived at your estimate in sufficient detail to allow for it to be reproduced.
- Provide specific examples to illustrate your concerns, and suggest alternatives.
- Explain your views as clearly as possible.
- Make sure to submit your comments by the comment period deadline identified.

3. *Specific Questions EPA is Soliciting for Tribal Comment.* In addition to overall general comments on any/all portions of the Guidance, EPA is specifically requesting Tribal comment on the following five questions:

(1) Does the proposed Guidance structure, offering three paths (non-regulatory, tribal water quality standards, regulation-based water quality controls) and three program activity levels (fundamental, intermediate, and mature) provide Tribes appropriate direction and flexibility for developing and implementing surface water quality protection programs?

(2) Does the title of Chapter 5, Non-Regulatory Approach, accurately portray the substantive programmatic elements found in the chapter?

(3) Do the basic minimum nine reporting requirements for monitoring, listed in Chapter 8, seem reasonable/compatible with the various maturity levels of Tribal water quality programs?

(4) What is the estimated Tribal cost to sample for the nine basic parameters?

(5) What type of technical assistance, if any, would your Tribe need to receive from EPA in order to comply with the monitoring and reporting requirements associated with the Guidance (see Chapter 8)?

II. Background

Over the past 10 years, funding available for Section 106 grants to Indian Tribes has increased from $3 million to $25 million per year. The draft Guidance provides a framework for evaluating national program results and more clearly defines expectations and requirements for Tribal Section 106 grant recipients. This document is an effort to provide unified guidance that helps Tribes develop and implement water quality programs and defines what EPA expects from Tribal programs. It provides an overview of all programmatic and technical requirements, discusses some common considerations across programs, and links to technical resources available to develop Tribal programs. The draft Guidance outlines new reporting requirements and data management expectations for all Tribal programs receiving Section 106 funds. Data collected as a result of the new reporting requirements will help EPA measure environmental results of the Section 106 Tribal Program and comply with the Government Performance and Results Act (GPRA) and other federal mandates. The draft Guidance can be found at the Environmental Protection Agency's Web site at *http://www.epa.gov/owm/cwfinance/106tgg07.htm*, or by contacting the point of contact listed under the section entitled **FOR FURTHER INFORMATION CONTACT.**

III. Statutory and Executive Order Reviews

Under Executive Order 12866 (58 FR 51735, October 4, 1993), this action is not a ''significant regulatory action'' and is therefore not subject to OMB review. Because this grant action is not subject to notice and comment requirements under the Administrative Procedures Act or any other statute, it is not subject to the Regulatory Flexibility Act (5 U.S.C. 601 *et seq.*) or sections 202 and 205 of the Unfunded Mandates Reform Act of 1999 (UMRA) (Pub. L. 104–4). In addition, this action does not significantly or uniquely affect small governments. Although this action does not generally create new binding legal requirements, where it does, such requirements do not substantially and directly affect Tribes under Executive Order 13175 (63 FR 67249, November 9, 2000). Informal consultation has been ongoing with Tribes, and a formal comment period will be initiated with the release of this notice. This action will not have federalism implications, as specified in Executive Order 13132 (64 FR 43255, August 10, 1999). This action is not subject to Executive Order 13211, ''Actions Concerning Regulations that Significantly Affect Energy Supply, Distribution, or Use'' (66 FR 28355, May 22, 2001), because it is not a significant regulatory action under Executive Order 12866. This action does not involve technical standards; thus, the requirements of section 12(d) of the National Technology Transfer and Advancement Act of 1995 (15 U.S.C. 272 note) do not apply. This action does not impose an information collection burden under the provisions of the Paperwork Reduction Act of 1995 (44 U.S.C. 3501 *et seq.*). The Congressional Review Act, 5 U.S.C. 801 *et seq.*, generally provides that before certain

actions may take effect, the agency promulgating the action must submit a report, which includes a copy of the action, to each House of the Congress and to the Comptroller General of the United States. Since this grant action contains legally binding requirements, it is subject to the Congressional Review Act, and EPA will submit its final action in its report to Congress under the Act.

Dated: April 20, 2006.

Benjamin H. Grumbles,

Assistant Administrator, Office of Water.

[FR Doc. E6–6363 Filed 4–26–06; 8:45 am]

BILLING CODE 6560–50–P

FEDERAL ELECTION COMMISSION

Sunshine Act Meeting

DATE AND TIME: Tuesday, May 2, 2006 at 10 a.m.

PLACE: 999 E Street, NW., Washington, DC.

STATUS: This meeting will be closed to the public.

Items To Be Discussed

Compliance matters pursuant to 2 U.S.C. 437g.

Audits conducted pursuant to 2 U.S.C. 437g, section 438(b), and Title 26, U.S.C.

Matters concerning participation in civil actions or proceedings or arbitration.

Internal personnel rules and procedures or matters affecting a particular employee.

* * * * *

DATE AND TIME: Thursday, May 4, 2006 at 10 a.m.

PLACE: 999 E Street, NW., Washington, DC (ninth floor).

STATUS: This meeting will be open to the public.

Items To Be Discussed

Correction and Approval of Minutes.

Advisory Opinion 2006–08: Matthew Brooks by counsel, Craig Engle.

Advisory Opinion 2006–13: Dennis Spivak by counsel, Neil Reiff.

Report of the Audit Division on the New Democrat Network.

Routine Administrative Matters.

FOR FURTHER INFORMATION CONTACT: Mr. Robert Biersack, Press Officer, Telephone: (202) 694–1220.

Mary W. Dove,

Secretary of the Commission.

[FR Doc. 06–4035 Filed 4–25–06; 3:22 pm]

BILLING CODE 6715–01–M

FEDERAL MARITIME COMMISSION

Notice of Request for Additional Information

The Commission gives notice that it has requested that the parties to the below listed agreement provide additional information pursuant to section 6(d) of the Shipping Act of 1984, 46 U.S.C. app. 1701 *et seq.* This action prevented the agreement from becoming effective as originally scheduled. Interested parties will have fifteen days from date of publication to file comments on the agreement.

Agreement No.: 011950.

Title: HSDG/FOML Agreement.

Parties: Hamburg-Sud and FESCO Ocean Management, Limited.

By order of the Federal Maritime Commission.

Dated: April 24, 2006.

Bryant L. VanBrakle,

Secretary.

[FR Doc. E6–6350 Filed 4–26–06; 8:45 am]

BILLING CODE 6730–01–P

GENERAL SERVICES ADMINISTRATION

Office of Small Business Utilization; Small Business Advisory Committee

Notification of a Public Meeting of the Small Business Advisory Committee

AGENCY: Office of Small Business Utilization, GSA.

ACTION: Notice.

SUMMARY: The General Services Administration (GSA) is announcing a public meeting of the GSA Small Business Advisory Committee (the Committee).

DATES: The meeting will take place May 15, 2006. The meeting will begin 9:00 a.m. and conclude no later than 5:00 p.m. that day. The Committee will accept oral public comments at this meeting and has reserved a total of thirty minutes for this purpose. Members of the public wishing to reserve speaking time must contact Aaron Collmann in writing at: *sbac@gsa.gov* or by fax at (202) 501–2590, no later than one week prior to the meeting.

ADDRESSES: GSA Expo 2006, Henry B. Gonzalez Convention Center Room 007A, 200 E. Market St., San Antonio, TX 78205.

FOR FURTHER INFORMATION CONTACT: Aaron Collmann, Room 6029, GSA Building, 1800 F Street, NW., Washington, DC 20405 (202) 501–1021 or email at *sbac@gsa.gov*.

SUPPLEMENTARY INFORMATION: This notice is published in accordance with the provisions of the Federal Advisory Committee Act (FACA) (Pub. L. 92–463). The purpose of this meeting is to develop the topics generated during the previous meeting February 21–22, 2006; to receive briefings from small business topical experts, and to hear from interested members of the public on proposals to improve GSA's small business contracting performance. Topics to be discussed from the previous meeting may include, but are not limited to, Size Certification, Contract Bundling, and the GSA Schedules Program. Information from previous meetings can be found online at *http://www.gsa.gov/sbac*.

Dated: April 21, 2006

Felipe Mendoza,

Associate Administrator, Office of Small Business Utilization, General Services Administration.

[FR Doc. E6–6360 Filed 4–26–06; 8:45 am]

BILLING CODE 6820–34–S

DEPARTMENT OF HEALTH AND HUMAN SERVICES

Solicitation of Nominations for Membership on the Secretary's Advisory Committee on Human Research Protections

AGENCY: Office of Public Health and Science, Office of the Secretary, HHS.

ACTION: Notice.

Authority: 42 U.S.C. 217a, section 222 of the Public Health Service Act, as amended. The Committee is governed by the provisions of Public Law 92–463, as amended (5 U.S.C. Appendix 2), which sets forth standards for the formation and use of advisory committees.

SUMMARY: The Office for Human Research Protections (OHRP), a program office in the Office of Public Health and Science, Department of Health and Human Services (HHS), is seeking nominations of qualified candidates to be considered for appointment as members of the Secretary's Advisory Committee on Human Research Protections (SACHRP). SACHRP provides advice and recommendations to the Secretary, HHS, and the Assistant Secretary for Health on matters pertaining to the continuance and improvement of functions within the authority of HHS directed toward protections for human subjects in research. SACHRP was established by the Secretary, HHS, on October 1, 2002. OHRP is seeking nominations of qualified candidates to fill four

positions on the Committee membership that will become vacant on January 3, 2007.

DATES: Nominations for membership on the Committee must be received no later than May 30, 2006.

ADDRESSES: Nominations should be mailed or delivered to: Dr. Bernard Schwetz, Director, Office for Human Research Protections, Department of Health and Human Services, 1101 Wootton Parkway, Suite 200; Rockville, MD 20852. Nominations will not be accepted by e-mail or by facsimile.

FOR FURTHER INFORMATION CONTACT: Ms. Catherine Slatinshek, Executive Director, SACHRP, Office for Human Research Protections, 1101 Wootton Parkway, Suite 200, Rockville, MD 20852, telephone: 1–240–453–6900. A copy of the Committee charter and list of the current membership can be obtained by contacting Ms. Slatinshek or by accessing the SACHRP Web site at *http://www.hhs.gov/ohrp/sachrp,* or requesting via e-mail at *sachrp@osophs.dhhs.gov.*

SUPPLEMENTARY INFORMATION: The Committee shall advise on matters pertaining to the continuance and improvement of functions within the authority of HHS directed toward protections for human subjects in research. Specifically, the Committee will provide advice relating to the responsible conduct of research involving human subjects with particular emphasis on: Special populations, such as neonates and children, prisoners, and the decisionally impaired; pregnant women, embryos, and fetuses; individuals and populations in international studies; populations in which there are individually identifiable samples, data, or information; and investigator conflicts of interest.

In addition, the Committee is responsible for reviewing selected ongoing work and planned activities of the OHRP and other offices/agencies within HHS responsible for human subjects protection. These evaluations may include, but are not limited to, a review of assurance systems, the application of minimal research risk standards, the granting of waivers, education programs sponsored by OHRP, and the ongoing monitoring and oversight of institutional review boards and the institutions that sponsor research.

Nominations

The Office for Human Research Protections is requesting nominations to fill four positions for voting members of SACHRP. The positions will become vacant on January 3, 2007. Nominations of potential candidates for consideration are being sought from a wide array of fields, including, but not limited to public health and medicine, behavioral and social sciences, health administration, and biomedical ethics. To qualify for consideration of appointment to the Committee, an individual must possess demonstrated experience and expertise in any of the several disciplines and fields pertinent to human subjects protection and/or clinical research.

The individuals selected for appointment to the Committee will serve as voting members. The individuals selected for appointment to the Committee can be invited to serve a term of up to four years. Committee members receive a stipend and, when applicable, reimbursement for per diem and any travel expenses incurred, for attending Committee meetings and conducting other business in the interest of the Committee.

Nominations should be typewritten. The following information should be included in the package of material submitted for each individual being nominated for consideration: (1) A letter of nomination that clearly states the name and affiliation of the nominee, the basis for the nomination (*i.e.*, specific attributes which qualify the nominee for service in this capacity), and a statement that the nominee is willing to serve as a member of the Committee; (2) the nominator's name, address, and daytime telephone number, and the home and/or work address, telephone number, and e-mail address of the individual being nominated; and (3) a current copy of the nominee's curriculum vitae. The names of Federal employees should not be nominated for consideration of appointment to this Committee.

The Department makes every effort to ensure that the membership of HHS Federal advisory committees is fairly balanced in terms of points of view represented and the committee's function. Every effort is made to ensure that a broad representation of geographic areas, females, ethnic and minority groups, and the disabled are given consideration for membership on HHS Federal advisory committees. Appointment to this Committee shall be made without discrimination on the basis of age, race, ethnicity, gender, sexual orientation, disability, and cultural, religious, or socioeconomic status.

Nominations must state that the nominee is willing to serve as a member of SACHRP and appears to have no conflict of interest that would preclude membership. Potential candidates are required to provide detailed information concerning such matters as financial holdings, consultancies, and research grants or contracts to permit evaluation of possible sources of conflict of interest.

Dated: April 21, 2006.

Bernard A. Schwetz,

Director, Office for Human Research Protections, Executive Secretary, Secretary's Advisory Committee on Human Research Protections.

[FR Doc. E6–6311 Filed 4–26–06; 8:45 am]

BILLING CODE 4150–36–P

DEPARTMENT OF HEALTH AND HUMAN SERVICES

Centers for Disease Control and Prevention

National Center for Injury Prevention and Control Initial Review Group

In accordance with section 10(a)(2) of the Federal Advisory Committee Act (Pub. L. 92–463), the Centers for Disease Control and Prevention (CDC) announce the following meeting:

Name: National Center for Injury Prevention and Control (NCIPC) Initial Review Group (IRG)

Times and Dates: 10 a.m.–10:30 p.m., May 23, 2006. 8 a.m.–6:30 p.m., May 24, 2006. 8:30 a.m.–6 p.m., May 25, 2006.

Place: Doubletree Club Atlanta Airport, 3400 Norman Berry Drive, Atlanta, GA 30344.

Status: Open: 10 a.m.–11 a.m., May 23, 2006, Closed: 11 a.m.–10:30 p.m., May 23, 2006, Closed: 8 a.m.–6:30 p.m., May 24, 2006, Closed: 8:30 a.m.–6 p.m., May 25, 2006.

Purpose: This group is charged with providing advice and guidance to the Secretary, Department of Health and Human Services and the Director, CDC, concerning the scientific and technical merit of grant and cooperative agreement applications received from academic institutions and other public and private profit and nonprofit organizations, including State and local government agencies, to conduct specific injury research that focuses on prevention and control.

Matters to be Discussed: Agenda items include an overview of the injury program, discussion of the review process and panelists' responsibilities, and the review of and vote on applications. Beginning at 11 a.m., May 23, through 6 p.m., May 25, the Group will review individual research grant and cooperative agreement applications submitted in response to two Fiscal Year 2006 Requests for Applications related to the following individual research announcements: #06008, Urban Partnership Academic Center of Excellent and #06006, Parenting Programs in the Prevention of Child Maltreatment. This portion of the meeting will be closed to the public in accordance with provisions set forth in

section 552b(c)(4) and (6), Title 5, U.S.C., and the Determination of the Director, Management Analysis and Services Office, CDC, pursuant to section 10(d) of Public Law 92–463.

Agenda items are subject to change as priorities dictate.

For Further Information Contact: Gwendolyn H. Cattledge, Ph.D., M.S.E.H., Executive Secretary, NCIPC IRG, CDC, 4770 Buford Highway, NE., M/S K02, Atlanta, Georgia 30341–3724, telephone (770) 488–1430.

The Director, Management Analysis and Services Office has been delegated the authority to sign **Federal Register** notices pertaining to announcements of meetings and other committee management activities for both CDC and the Agency for Toxic Substances and Disease Registry.

Dated: April 20, 2006.

Alvin Hall,

Director, Management Analysis and Services Office, Centers for Disease Control and Prevention.

[FR Doc. E6–6349 Filed 4–26–06; 8:45 am]

BILLING CODE 4163–18–P

DEPARTMENT OF HEALTH AND HUMAN SERVICES

Food and Drug Administration

[Docket No. 2006F–0059]

Danisco USA, Inc.; Filing of Food Additive Petition; Amendment

AGENCY: Food and Drug Administration, HHS.

ACTION: Notice.

SUMMARY: The Food and Drug Administration (FDA) is amending the filing notice for a food additive petition filed by Danisco USA, Inc., to indicate that the petition proposes to amend the food additive regulations at 21 CFR 172.841 by incorporating by reference the specifications for polydextrose in the 5th edition of the Food Chemicals Codex (FCC), 2003.

ADDRESSES: Division of Dockets Management (HFA–305), Food and Drug Administration, 5630 Fishers Lane, rm. 1061, Rockville, MD 20852.

FOR FURTHER INFORMATION CONTACT: Paul C. DeLeo, Center for Food Safety and Applied Nutrition (HFS–265), Food and Drug Administration, 5100 Paint Branch Pkwy., College Park, MD 20740–3835, 301–436–1302.

SUPPLEMENTARY INFORMATION: In a notice published in the **Federal Register** of February 15, 2006 (71 FR 7975), FDA announced that a food additive petition (FAP 6A4763) had been filed by Danisco USA, Inc., 440 Saw Mill River Rd., Ardsley, NY 10502–2605. The petition proposed to amend the food additive regulations in § 172.841 Polydextrose (21 CFR 172.841) to provide for the safe use of polydextrose as a bulking agent, formulation aid, humectant, and texturizer in all foods, except meat and poultry. After publication of the filing notice, FDA learned that the petition also proposed to update § 172.841 by incorporating by reference the specifications for polydextrose in the FCC, 5th ed., 2003. Currently, § 172.841 incorporates by reference the specifications of FCC, 4th ed., 1996.

The agency compared specifications in the monograph for polydextrose in the 4th and 5th editions of the FCC and found that the 5th edition retains the lead limit of 0.5 milligram(mg)/kilogram(kg), but no longer lists a specification limit of 5 mg/kg for heavy metals as lead. The 5th edition of the FCC eliminated the heavy metals as lead test from most monographs in favor of including individual specifications for relevant heavy metals. In addition, the 5th edition added a nickel specification of 2 mg/kg for hydrogenated polydextrose, as well as modified the pH specification of a 10 percent solution of untreated polydextrose from ''not less than 2.5'' (4th edition) to ''between 2.5 and 7.0'' (5th edition). The name of the specification for 5–Hydroxymethylfurfural has also changed from ''5–Hydroxymethylfurfural'' (4th edition) to ''5–Hydroxymethylfurfural and Related Compounds'' (5th edition), although the test and equation used to determine the level have remained the same. The agency has placed copies of the polydextrose monograph in the 4th and 5th editions of the FCC on public display at the Division of Dockets Management (see **ADDRESSES**) for public review.

Dated: March 30, 2006.

Laura M. Tarantino,

Director, Office of Food Additive Safety, Center for Food Safety and Applied Nutrition.

[FR Doc. E6–6370 Filed 4–26–06; 8:45 am]

BILLING CODE 4160–01–S

DEPARTMENT OF HEALTH AND HUMAN SERVICES

Food and Drug Administration

[Docket No. 2005D–0202]

Guidance for Industry on Bar Code Label Requirements—Questions and Answers; Availability

AGENCY: Food and Drug Administration, HHS.

ACTION: Notice.

SUMMARY: The Food and Drug Administration (FDA) is announcing the availability of a guidance for industry entitled ''Bar Code Label Requirements—Questions and Answers.'' FDA regulations require certain human drug and biological products to have on their labels a linear bar code that identifies the drug's National Drug Code (NDC) number. We have received several inquiries about how the requirements apply to specific products or circumstances. The purpose of the guidance is to respond to the questions.

DATES: Submit written or electronic comments on agency guidances at any time.

ADDRESSES: Submit written requests for single copies of this guidance to the Division of Drug Information (HFD–240), Center for Drug Evaluation and Research, Food and Drug Administration, 5600 Fishers Lane, Rockville, MD 20857; or the Office of Communication, Training, and Manufacturers Assistance (HFM–40), Center for Biologics Evaluation and Research, Food and Drug Administration, 1401 Rockville Pike, Rockville, MD 20852–1448. Send one self-addressed adhesive label to assist that office in processing your requests. Submit written comments on the guidance to the Division of Dockets Management (HFA–305), Food and Drug Administration, 5630 Fishers Lane, rm. 1061, Rockville, MD 20852. Submit electronic comments to *http://www.fda.gov/dockets/ecomments*. See the **SUPPLEMENTARY INFORMATION** section for electronic access to the guidance document.

FOR FURTHER INFORMATION CONTACT: *For products regulated by the Center for Drug Evaluation and Research*: Valerie L. Whipp, Center for Drug Evaluation and Research (HFD–310), Food and Drug Administration, 11919 Rockville Pike, Rockville, MD 20852, 301–827–8963. *For products regulated by the Center for Biologics Evaluation and Research*: Elizabeth Callaghan, Center for Biologics Evaluation and Research (HFM–370), Food and Drug Administration, 1401 Rockville Pike, Rockville, MD 20852, 301–827–8963.

SUPPLEMENTARY INFORMATION:

I. Background

FDA is announcing the availability of a guidance for industry entitled ''Bar Code Label Requirements—Questions and Answers.'' In the **Federal Register** of February 26, 2004 (69 FR 9120), FDA issued a final rule that requires certain human drug and biological product

labels to have a bar code containing the drug's NDC number. Bar codes will help reduce the number of medication errors in hospitals and other health care settings by allowing health care professionals to use bar code scanning equipment to verify that the right drug (in the right dose and right route of administration) is being given to the right patient at the right time. This guidance is intended to explain certain bar code labeling requirements and their application to human drug and biological products.

In the **Federal Register** of June 7, 2005 (70 FR 33182), FDA announced the availability of a draft version of this guidance. FDA received comments in response to the draft guidance. The agency has considered those comments carefully and has revised the answer to Question 7 (which has been renumbered to Question 9) regarding the application of the 2-year implementation date. In response to recent inquiries from a trade association, the agency has also added Questions 3 and 4 regarding the application of the bar code labeling requirements to over-the-counter drug products. In addition, the agency has made minor editorial changes to the guidance.

This guidance is being issued consistent with FDA's good guidance practices regulation (21 CFR 10.115). The guidance represents the agency's current thinking on certain questions and answers on bar code labeling requirements. It does not create or confer any rights for or on any person and does not operate to bind FDA or the public. An alternative approach may be used if such approach satisfies the requirements of the applicable statutes and regulations.

II. Comments

Interested persons may submit to the Division of Dockets Management (see **ADDRESSES**) written or electronic comments regarding this document. Submit a single copy of electronic comments or two paper copies of any mailed comments, except that individuals may submit one paper copy. Comments are to be identified with the docket number found in brackets in the heading of this document. Received comments may be seen in the Division of Dockets Management between 9 a.m. and 4 p.m., Monday through Friday.

III. Electronic Access

Persons with access to the Internet may obtain the document at *http://www.fda.gov/cder/guidance/index.htm*, *http://www.fda.gov/cber/guidelines.htm*, or *http://www.fda.gov/ohrms/dockets/default.htm*.

Dated: April 20, 2006.

Jeffrey Shuren,

Assistant Commissioner for Policy.

[FR Doc. E6–6312 Filed 4–26–06; 8:45 am]

BILLING CODE 4160–01–S

DEPARTMENT OF HEALTH AND HUMAN SERVICES

Food and Drug Administration

[Docket No. 2006D–0108]

Draft ''Guidance for Industry: Informed Consent Recommendations for Source Plasma Donors Participating in Plasmapheresis and Immunization Programs;'' Availability

AGENCY: Food and Drug Administration, HHS.

ACTION: Notice.

SUMMARY: The Food and Drug Administration (FDA) is announcing the availability of a draft document entitled ''Guidance for Industry: Informed Consent Recommendations for Source Plasma Donors Participating in Plasmapheresis and Immunization Programs,'' dated April 2006. The draft guidance document further explains the requirements on informed consent as they relate to plasmapheresis and immunization programs. The draft guidance document is designed to assist blood establishments planning to apply for licensure or those revising their existing informed consent forms in determining whether the documents include all the appropriate information. This draft guidance, when finalized, will supersede the draft guidance document entitled ''Draft Reviewer's Guide: Informed Consent for Plasmapheresis/Immunization,'' dated October 1995.

DATES: Submit written or electronic comments on the draft guidance by July 26, 2006 to ensure their adequate consideration in the preparation of the final guidance. General comments on agency guidance documents are welcome at any time.

ADDRESSES: Submit written requests for single copies of the draft guidance to the Office of Communication, Training, and Manufacturers Assistance (HFM–40), Center for Biologics Evaluation and Research (CBER), Food and Drug Administration, 1401 Rockville Pike, Rockville, MD 20852–1448. Send one self-addressed adhesive label to assist the office in processing your requests. The draft guidance may also be obtained by mail by calling the CBER Voice Information System at 1–800–835–4709 or 301–827–1800. See the **SUPPLEMENTARY INFORMATION** section for electronic access to the guidance document.

Submit written comments on the draft guidance to the Division of Dockets Management (HFA–305), Food and Drug Administration, 5630 Fishers Lane, rm. 1061, Rockville, MD 20852. Submit electronic comments to *http://www.fda.gov/dockets/ecomments*.

FOR FURTHER INFORMATION CONTACT: Joseph L. Okrasinski Jr., Center for Biologics Evaluation and Research (HFM–17), Food and Drug Administration, 1401 Rockville Pike, suite 200N, Rockville, MD 20852–1448, 301–827–6210.

SUPPLEMENTARY INFORMATION:

I. Background

FDA is announcing the availability of a draft document entitled ''Guidance for Industry: Informed Consent Recommendations for Source Plasma Donors Participating in Plasmapheresis and Immunization Programs,'' dated April 2006. The draft guidance further explains the requirements under part 640 (21 CFR part 640) in 21 CFR 640.61 for the informed consent forms for the donors as they relate to plasmapheresis and immunization programs. The information in the draft guidance will assist those establishments applying for licensure as well as those establishments that are revising their existing informed consent forms. The draft guidance discusses information that is recommended for the informed consent forms. This information includes, but is not limited to, the following: Clarity of the language in the informed consent form, length and frequency of the procedures, possible adverse reactions, side affects that may occur, opportunities to ask questions, and discussion concerning Acquired Immunodeficiency Syndrome (AIDS). Also discussed in the draft guidance is the use of a separate informed consent form for a donor who is participating in an immunization program including one which involves an Investigational New Drug (IND), and its recommended informational content, such as the discussion of the general risks and precautions involved, and suggestions for the health and welfare of the participants. This draft guidance when finalized will supersede the draft guidance document entitled, ''Draft Reviewer's Guide: Informed Consent for Plasmapheresis/Immunization,'' dated October 1995.

The draft guidance is being issued consistent with FDA's good guidance practices regulation (21 CFR 10.115). The draft guidance, when finalized, will

represent the agency's current thinking on this topic. It does not create or confer any rights for or on any person and does not operate to bind FDA or the public. An alternative approach may be used if such approach satisfies the requirements of the applicable statutes and regulations.

II. Paperwork Reduction Act

This draft guidance refers to previously approved collections of information found in FDA regulations. These collections of information are subject to review by the Office of Management and Budget (OMB) under the Paperwork Reduction Act of 1995 (44 U.S.C. 3501–3520). The collection of information under §§ 640.61 and 640.66 was approved under OMB control number 0910–0116.

III. Comments

The draft guidance is being distributed for comment purposes only and is not intended for implementation at this time. Interested persons may submit written or electronic comments to the Division of Dockets Management (see **ADDRESSES**) regarding the draft guidance. Submit written or electronic comments to ensure adequate consideration in preparation of the final guidance. Submit a single copy of electronic comments or two paper copies of any mailed comments, except that individuals may submit one paper copy. Comments are to be identified with the docket number found in the brackets in the heading of this document. A copy of the guidance and received comments are available for public examination in the Division of Dockets Management between 9 a.m. and 4 p.m., Monday through Friday.

IV. Electronic Access

Persons with access to the Internet may obtain the guidance at either *http://www.fda.gov/cber/guidelines.htm* or *http://www.fda.gov/ohrms/dockets/default.htm*.

Dated: April 19, 2006.

Jeffrey Shuren,

Assistant Commissioner for Policy.

[FR Doc. E6–6314 Filed 4–26–06; 8:45 am]

BILLING CODE 4160–01–S

DEPARTMENT OF HEALTH AND HUMAN SERVICES

Health Resources and Services Administration

C.W. Bill Young Cell Transplantation Program: National Cord Blood Inventory; Recognition of Cord Blood Bank Accreditation Program(s)

AGENCY: Health Resources and Services Administration (HRSA), HHS.

ACTION: Notice of opportunity for public comment through conference calls.

SUMMARY: Public Law 109–129 requires the Secretary of Health and Human Services to recognize one or more cord blood accreditation entities for the accreditation of cord blood banks participating in the collection and maintenance of umbilical cord blood units for the National Cord Blood Inventory. These cord blood units will be made available for unrelated donor blood stem cell transplants through the C.W. Bill Young Cell Transplantation Program. The HRSA, Healthcare Systems Bureau (HSB), Division of Transplantation (DoT) is in the process of information-gathering to assist in the determination of which cord blood bank accreditation program(s) to recognize on an interim basis for the initial cycle of funding for the National Cord Blood Inventory. The purpose of this solicitation is to receive public input on the following: (1) Approaches to accreditation required to ensure quality cord blood bank operations (including collection sites); (2) Utilization of accreditation programs to ensure product quality and best practices; (3) Degree to which accreditation standards are evidence based and supported by published literature; (4) Extent to which accreditation standards allow for variations in cord blood bank practices; (5) Criteria for the Secretary to consider in recognizing cord blood bank accrediting programs for the National Cord Blood Inventory, C.W. Bill Young Cell Transplantation Program.

The HRSA intends for this interim process to be followed by a formal, more comprehensive recognition process that will include input from both the Advisory Council, once it is established, and the interested public as required in the legislation. The purpose of this Notice is to invite interested parties to register for and participate in either of two conference calls, described below, that HRSA is scheduling to obtain comment on factors relevant to determining which accrediting organization(s) to recognize for the initial cycle of funding under the National Cord Blood Inventory.

DATES: The conference calls will be held on May 9, 2006, at 2 to 4 p.m. e.s.t. and May 15, 2006, at 2 p.m. to 4 p.m. e.s.t. Participants are asked to register for the conference by contacting Anita Wabeke at (301) 443–4747 or e-mail *awabeke@hrsa.gov.* The registration deadline is May 3, 2006 for both conferences. Registration is not guaranteed; it is on a first come basis. Since the topics listed above will be discussed on both calls, and to facilitate hearing all points of view, HRSA requests that organizations and individuals wishing to participate do so in only one of the calls. Due to the limited number of lines available for the calls, organizations with multiple participants are encouraged to register for one line to allow maximum participation from all interested parties. Parties wishing to submit written comments should ensure that the comments are postmarked or E-mailed no later than May 17, 2006 for consideration.

ADDRESSES: Please send all written comments to James F. Burdick, M.D., Director, DoT, HSB, HRSA, Room 12C–06, Parklawn Building, 5600 Fishers Lane, Rockville, Maryland 20857; telephone (301) 443–7577; fax (301) 594–6095; or e-mail: *jburdick@hrsa.gov.*

FOR FURTHER INFORMATION CONTACT: James F. Burdick, M.D., Director, DoT, HSB, HRSA, Parklawn Building, Room 12C–06, 5600 Fishers Lane, Rockville, Maryland 20857; telephone (301) 443–7577; fax (301) 594–6095; or e-mail: *jburdick@hrsa.gov.*

SUPPLEMENTARY INFORMATION:

Background

On December 20, 2005, the Stem Cell Therapeutic Act of 2005 was enacted as Public Law 109–129. The Act authorizes the establishment of the National Cord Blood Inventory and the C.W. Bill Young Cell Transplantation Program as the successor to the National Bone Marrow Donor Registry. The National Cord Blood Inventory is to be a high quality, genetically diverse inventory of cord blood units for patients who need a blood stem cell transplant and who lack an available related donor. The cord blood units in the National Cord Blood Inventory will be made available for transplantation through the C.W. Bill Young Cell Transplantation Program. Cord blood banks collecting and maintaining units for the National Cord Blood Inventory must meet the statutory definition of a qualified cord blood bank, which includes a requirement that cord blood banks be accredited by an

accreditation entity recognized by the Secretary for this purpose.

Program Authority

The C.W. Bill Young Cell Transplantation Program is authorized by Public Law 109–129, which amends Part I of the Public Health Service Act.

Dated: April 20, 2006.

Elizabeth M. Duke,

Administrator.

[FR Doc. E6–6313 Filed 4–26–06; 8:45 am]

BILLING CODE 4165–15–P

DEPARTMENT OF HOMELAND SECURITY

[Docket No. NCS–2006–0004]

Preparedness Directorate; National Security Telecommunications Advisory Committee

AGENCY: Preparedness Directorate, DHS.

ACTION: Notice of partially closed advisory committee meeting.

SUMMARY: The President's National Security Telecommunications Advisory Committee (NSTAC) will meet in a partially closed session.

DATES: Wednesday, May 10, 2006, from 9:15 a.m. until 3:30 p.m.

ADDRESSES: The meeting will take place at the Ronald Reagan Building and International Trade Center, Washington, DC. If you desire to submit comments, they must be submitted by May 2, 2006. Comments must be identified by NCS–2006–0004 and may be submitted by *one* of the following methods:

- Federal eRulemaking Portal: *http://www.regulations.gov.* Follow the instructions for submitting comments.
- E-mail: *NSTAC@dhs.gov.* Include docket number in the subject line of the message.
- Mail: Office of the Manager, National Communications System (N5), Department of Homeland Security, Washington, DC 20529.

Instructions: All submissions received must include the words ''Department of Homeland Security'' and NCS–2006–0004, the docket number for this action. Comments received will be posted without alteration at *http://www.regulations.gov,* including any personal information provided.

Docket: For access to the docket to read background documents or comments received by the NSTAC, go to *http://www.regulations.gov.*

FOR FURTHER INFORMATION CONTACT: Ms. Kiesha Gebreyes, Chief, Industry Operations Branch at (703) 235–5525, e-mail: *kiesha.gebreyes@dhs.gov* or write the Deputy Manager, National Communications System, Department of Homeland Security, IP/NCS/N5.

SUPPLEMENTARY INFORMATION: The NSTAC advises the President of the United States on issues and problems related to implementing national security and emergency preparedness (NS/EP) telecommunications policy. Notice of this meeting and the partial closure thereof is given under the Federal Advisory Committee Act (FACA), Pub. L. 92–463, as amended (5 U.S.C. App. 1 *et seq.*).

At the upcoming meeting, between 9:15 a.m. and 10:15 a.m., the committee will discuss ongoing NSTAC task force work of the Emergency Communications & Interoperability Task Force, Telecommunications and Electric Power Interdependency Task Force, Legislative and Regulatory Task Force, and Research and Development Task Force. This portion of the meeting will be open to the public.

Following the morning Business Session, the committee will hold an Executive Session between the hours of 10:30 a.m. and 3:30 p.m. to discuss emergency communications & interoperability, international implications of the NGN, and regional coordination, planning, and exercises. The Executive Session will conclude with a discussion of the findings and conclusions reached during the meeting. This portion of the meeting will be closed to the public.

Basis for Closure: The Executive Session will likely include discussions of sensitive infrastructure information concerning system threats and explicit physical/cyber vulnerabilities related to current emergency communications capabilities and the use of national security and emergency preparedness services over the next generation networks. Public disclosure of such information would heighten awareness of potential vulnerabilities and increase the likelihood of exploitation by terrorists or other motivated adversaries.

The Executive Session will occur between 10:30 a.m. and 3:30 p.m. and will involve sensitive information. Pursuant to Section 10(d) of the Federal Advisory Committee Act, Public Law 92–463, as amended (5 U.S.C. App. 1 *et seq.*), the Department has determined that this discussion will concern matters which, if disclosed, would be likely to frustrate significantly the implementation of a proposed agency action. Accordingly, the relevant portion of this meeting will be closed to the public pursuant to the authority set forth in 5 U.S.C. 552b(c)(9)(B).

Dated: April 5, 2006.

Peter M. Fonash,

Deputy Manager National Communications System.

[FR Doc. 06–3994 Filed 4–26–06; 8:45 am]

BILLING CODE 4410–10–P

DEPARTMENT OF THE INTERIOR

Bureau of Land Management

Meeting of the California Desert District Advisory Council

AGENCY: Bureau of Land Management, Interior.

ACTION: Notice of public meeting.

SUMMARY: Notice is hereby given, in accordance with Public Laws 92–463 and 94–579, that the California Desert District Advisory Council to the Bureau of Land Management, U.S. Department of the Interior, will participate in a field tour of BLM-administered public lands on Friday, June 23, 2006, from 7:30 a.m. to 5 p.m., and meet in formal session on Saturday, June 24 from 8 a.m. to 3 p.m. in Continental Labor Hall at the Desert Empire Fairgrounds, located at 520 South Richmond Road, Ridgecrest, California.

The Council and interested members of the public will depart for the field tour at 7:30 a.m. from the parking lot of the Best Western China Lake Inn, located at 400 South China Lake Boulevard in Ridgecrest. The public is welcome to participate in the tour, but should plan on providing their own transportation, drinks, and lunch.

Agenda topics for the formal session on Saturday will include updates by Council members and reports from the BLM District Manager and five field office managers. Additional agenda topics are being developed. Once finalized, the field tour and meeting agendas will be published in a news release prior to the meeting and posted on BLM's state Web site at *http://www.blm.gov/ca/news/rac.html.*

SUPPLEMENTARY INFORMATION: All Desert District Advisory Council meetings are open to the public. Public comment for items not on the agenda will be scheduled at the beginning of the meeting Saturday morning. Time for public comment may be made available by the Council Chairman during the presentation of various agenda items, and is scheduled at the end of the meeting for topics not on the agenda.

While the Saturday meeting is tentatively scheduled from 8 a.m. to 3 p.m., the meeting could conclude prior to 3 p.m. should the Council conclude its presentations and

discussions. Therefore, members of the public interested in a particular agenda item or discussion should schedule their arrival accordingly.

Written comments may be filed in advance of the meeting for the California Desert District Advisory Council, c/o Bureau of Land Management, Public Affairs Office, 22835 Calle San Juan De Los Lagos, Moreno Valley, California 92553. Written comments also are accepted at the time of the meeting and, if copies are provided to the recorder, will be incorporated into the minutes.

FOR FURTHER INFORMATION CONTACT: Doran Sanchez, BLM California Desert District External Affairs, (951) 697–5220.

Dated: April 18, 2006.

Steven J. Borchard,

District Manager.

[FR Doc. E6–6337 Filed 4–26–06; 8:45 am]

BILLING CODE 4310–40–P

DEPARTMENT OF THE INTERIOR

Minerals Management Service

Royalty Policy Committee—Notice of Renewal

AGENCY: Minerals Management Service, Interior.

ACTION: Notice of renewal of the Royalty Policy Committee.

SUMMARY: Following consultation with the General Services Administration, notice is hereby given that the Secretary of the Interior is renewing the Royalty Policy Committee.

The Royalty Policy Committee will provide advice related to the performance of discretionary functions under the laws governing the Department of the Interior's management of Federal and Indian mineral leases and revenues. The Committee will review and comment on revenue management and other mineral-related policies and provide a forum to convey views representative of mineral lessees, operators, revenue payors, revenue recipients, governmental agencies, and the interested public.

FOR FURTHER INFORMATION CONTACT: Gina Dan, Minerals Management Service, Minerals Revenue Management, Denver, Colorado 80225–0165, telephone (303) 231–3392.

Certification

I hereby certify that the Royalty Policy Committee is in the public interest in connection with the performance of duties imposed on the Department of the Interior by 43 U.S.C. 1331 *et seq.*, 30 U.S.C. 1701 *et seq.*, and 30 U.S.C. 1001 *et seq.*

Dated: April 13, 2006.

P. Lynn Scarlett,

Acting Secretary of the Interior.

[FR Doc. E6–6339 Filed 4–26–06; 8:45 am]

BILLING CODE 4310–MR–P

INTERNATIONAL TRADE COMMISSION

[Inv. Nos. 731–TA–846–850 (Review)]

Carbon and Alloy Seamless Standard, Line, and Pressure Pipe From the Czech Republic, Japan, Mexico, Romania, and South Africa

Determinations

On the basis of the record [1] developed in the subject five-year reviews, the United States International Trade Commission (Commission) determines, pursuant to section 751(c) of the Tariff Act of 1930 (19 U.S.C. 1675(c)) (the Act), that revocation of the antidumping duty orders on small diameter carbon and alloy seamless standard, line, and pressure pipe from Japan and Romania [2] and large diameter carbon and alloy seamless standard, line, and pressure pipe from Japan would be likely to lead to continuation or recurrence of material injury to an industry in the United States within a reasonably foreseeable time.

The Commission also determines that revocation of the antidumping duty orders on small diameter carbon and alloy seamless standard, line, and pressure pipe from the Czech Republic and South Africa [3] and large diameter carbon and alloy seamless standard, line, and pressure pipe from Mexico [4] would not be likely to lead to continuation or recurrence of material injury to an industry in the United States within a reasonably foreseeable time.

Background

The Commission instituted these reviews on May 2, 2005 (70 FR 22688) and determined on August 5, 2005 that it would conduct full reviews (70 FR 49680, August 24, 2005). Notice of the scheduling of the Commission's reviews and of a public hearing to be held in connection therewith was given by posting copies of the notice in the Office of the Secretary, U.S. International Trade Commission, Washington, DC, and by publishing the notice in the **Federal Register** on September 23, 2005 (70 FR 55917).[5] The hearing was held in Washington, DC, on March 2, 2006, and all persons who requested the opportunity were permitted to appear in person or by counsel.

The Commission transmitted its determinations in these reviews to the Secretary of Commerce on April 26, 2006. The views of the Commission are contained in USITC Publication 3850 (April 2006), entitled *Carbon and Alloy Seamless Standard, Line, and Pressure Pipe from the Czech Republic, Japan, Mexico, Romania, and South Africa: Investigation Nos. 731–TA–846–850 (Review).*

By order of the Commission.

Issued: April 24, 2006.

Marilyn R. Abbott,

Secretary to the Commission.

[FR Doc. E6–6362 Filed 4–26–06; 8:45 am]

BILLING CODE 7020–02–P

[1] The record is defined in sec. 207.2(f) of the Commission's Rules of Practice and Procedure (19 CFR 207.2(f)).

[2] Vice Chairman Deanna Tanner Okun and Commissioners Jennifer A. Hillman and Daniel R. Pearson dissenting with regard to imports from Romania.

[3] Chairman Stephen Koplan and Commissioner Charlotte R. Lane dissenting.

[4] Chairman Stephen Koplan and Commissioner Charlotte R. Lane dissenting.

[5] The Commission revised its schedule effective February 10, 2006 (71 FR 8311, February 16, 2006).

INTERNATIONAL TRADE COMMISSION

[Investigation Nos. 701–TA–318 and 731–TA–538 and 561 (Second Review)]

Sulfanilic Acid From China and India

Determinations

On the basis of the record [1] developed in the subject five-year reviews, the United States International Trade Commission (''Commission'') determines, pursuant to section 751(c) of the Tariff Act of 1930 (19 U.S.C. 1675(c)) (''the Act''), that revocation of the countervailing duty order on sulfanilic acid from India and the antidumping duty orders on sulfanilic acid from China and India would be likely to lead to continuation or recurrence of material injury to an industry in the United States within a reasonably foreseeable time.

Background

The Commission instituted these reviews on May 2, 2005 (70 FR 22698) and determined on August 5, 2005 that it would conduct full reviews (70 FR 48588, August 18, 2005). Notice of the scheduling of the Commission's reviews and of a public hearing to be held in

[1] The record is defined in sec. 207.2(f) of the Commission's Rules of Practice and Procedure (19 CFR 207.2(f)).

connection therewith was given by posting copies of the notice in the Office of the Secretary, U.S. International Trade Commission, Washington, DC, and by publishing the notice in the **Federal Register** on September 20, 2005 (70 FR 55165). The hearing was held in Washington, DC, on January 26, 2006, and all persons who requested the opportunity were permitted to appear in person or by counsel.

The Commission transmitted its determinations in these reviews to the Secretary of Commerce on April 21, 2006. The views of the Commission are contained in USITC Publication 3849 (April 2006), entitled *Sulfanilic Acid from China and India: Investigation Nos. 701–TA–318 and 731–TA–538 and 561* (*Second Review*).

By order of the Commission.

Issued: April 21, 2006.

Marilyn R. Abbott,

Secretary to the Commission.

[FR Doc. E6–6309 Filed 4–26–06; 8:45 am]

BILLING CODE 7020–02–P

DEPARTMENT OF JUSTICE

Bureau of Alcohol, Tobacco, Firearms and Explosives

Agency Information Collection Activities: Proposed Collection; Comments Requested

ACTION: 60-day notice of information collection under review: Transactions Among Licensee/Permittees and Transactions Among Licensees and Holders of User Permits.

The Department of Justice (DOJ), Bureau of Alcohol, Tobacco, Firearms and Explosives (ATF), has submitted the following information collection request to the Office of Management and Budget (OMB) for review and approval in accordance with the Paperwork Reduction Act of 1995. The proposed information collection is published to obtain comments from the public and affected agencies. Comments are encouraged and will be accepted for ''sixty days'' until June 26, 2006. This process is conducted in accordance with 5 CFR 1320.10.

If you have comments especially on the estimated public burden or associated response time, suggestions, or need a copy of the proposed information collection instrument with instructions or additional information, please contact Sheila R. Hall, Explosives Industry Programs Branch, Room 5000, 650 Massachusetts Avenue, NW., Washington, DC 20226.

Written comments and suggestions from the public and affected agencies concerning the proposed collection of information are encouraged. Your comments should address one or more of the following four points:

—Evaluate whether the proposed collection of information is necessary for the proper performance of the functions of the agency, including whether the information will have practical utility;

—Evaluate the accuracy of the agencies estimate of the burden of the proposed collection of information, including the validity of the methodology and assumptions used;

—Enhance the quality, utility, and clarity of the information to be collected; and

—Minimize the burden of the collection of information on those who are to respond, including through the use of appropriate automated, electronic, mechanical, or other technological collection techniques or other forms of information technology, e.g., permitting electronic submission of responses.

Overview of This Information Collection

(1) *Type of Information Collection:* Extension of a currently approved collection.

(2) *Title of the Form/Collection:* Transactions Among Licensee/Permitees and Transactions Among Licensees and Holders of User Permits.

(3) *Agency form number, if any, and the applicable component of the Department of Justice sponsoring the collection:* Form Number: None. Bureau of Alcohol, Tobacco, Firearms and Explosives.

(4) *Affected public who will be asked or required to respond, as well as a brief abstract:* Primary: Business or other for-profit. Other: None. The Safe Explosives Act requires an explosives distributor must verify the identity of the purchaser; an explosives purchaser must provide a copy of the license/permit to distributor prior to the purchase of explosive materials; possessors of explosive materials must provide a list of explosives storage locations; purchasers of explosive materials must provide a list of representatives authorized to purchase on behalf of the distributor; and an explosives purchaser must provide a statement of intended use for the explosives.

(5) *An estimate of the total number of respondents and the amount of time estimated for an average respondent to respond:* It is estimated that 50,000 respondents will take 30 minutes to comply with the required information.

(6) *An estimate of the total public burden (in hours) associated with the collection:* There are an estimated 25,000 annual total burden hours associated with this collection.

If additional information is required, contact: Robert B. Briggs, Department Clearance Officer, Policy and Planning Staff, Justice Management Division, Department of Justice, Patrick Henry Building, Suite 1600, 601 D Street, NW., Washington, DC 20530.

Robert B. Briggs,

Department Clearance Officer, Department of Justice.

[FR Doc. 06–3955 Filed 4–26–06; 8:45 am]

BILLING CODE 4410–FY–M

DEPARTMENT OF JUSTICE

Bureau of Alcohol, Tobacco, Firearms and Explosives

Agency Information Collection Activities: Proposed Collection; Comments Requested

ACTION: 60-day notice of information collection under review: Limited Permittee Transaction Record.

The Department of Justice (DOJ), Bureau of Alcohol, Tobacco, Firearms and Explosives (ATF), has submitted the following information collection request to the Office of Management and Budget (OMB) for review and approval in accordance with the Paperwork Reduction Act of 1995. The proposed information collection is published to obtain comments from the public and affected agencies. Comments are encouraged and will be accepted for ''sixty days'' until June 26, 2006. This process is conducted in accordance with 5 CFR 1320.10.

If you have comments, especially on the estimated public burden or associated response time, suggestions, or need a copy of the proposed information collection instrument with instructions or additional information, please contact Sheila Hall, Explosives Industry Programs Branch, Room 5000, 650 Massachusetts Avenue, NW., Washington, DC 20226.

Written comments and suggestions from the public and affected agencies concerning the proposed collection of information are encouraged. Your comments should address one or more of the following four points:

—Evaluate whether the proposed collection of information is necessary for the proper performance of the functions of the agency, including

whether the information will have practical utility;
—Evaluate the accuracy of the agencies estimate of the burden of the proposed collection of information, including the validity of the methodology and assumptions used;
—Enhance the quality, utility, and clarity of the information to be collected; and
—Minimize the burden of the collection of information on those who are to respond, including through the use of appropriate automated, electronic, mechanical, or other technological collection techniques or other forms of information technology, e.g., permitting electronic submission of responses.

Overview of This Information Collection

(1) *Type of Information Collection:* Extension of a currently approved collection.

(2) *Title of the Form/Collection:* Limited Permittee Transaction Record.

(3) *Agency form number, if any, and the applicable component of the Department of Justice sponsoring the collection: Form Number:* None. Bureau of Alcohol, Tobacco, Firearms and Explosives.

(4) *Affected public who will be asked or required to respond, as well as a brief abstract:* Primary: Business or other for-profit. Other: Individuals or households. The purpose of this collection is to ensure that records are available for tracing explosive materials when necessary and to ensure that limited permittees do not exceed their maximum allotment of receipts of explosive materials.

(5) *An estimate of the total number of respondents and the amount of time estimated for an average respondent to respond:* It is estimated that 5000 respondents will spend approximately 5 minutes to receive, file, and forward the appropriate documentation.

(6) *An estimate of the total public burden (in hours) associated with the collection:* There is an estimated 12,000 annual total burden hours associated with this collection.

If additional information is required contact: Robert B. Briggs, Department Clearance Officer, Policy and Planning Staff, Justice Management Division, Department of Justice, Patrick Henry Building, Suite 1600, 601 D Street NW., Washington, DC 20530.

Dated: April 19, 2006.

Robert B. Briggs,

Department Clearance Officer, Department of Justice.

[FR Doc. 06–3956 Filed 4–26–06; 8:45 am]

BILLING CODE 4410–FY–M

DEPARTMENT OF JUSTICE

Bureau of Alcohol, Tobacco, Firearms and Explosives

Agency Information Collection Activities: Proposed Collection; Comments Requested

ACTION: 60-day notice of information collection under review: List of Responsible Persons.

The Department of Justice (DOJ), Bureau of Alcohol, Tobacco, Firearms and Explosives (ATF), has submitted the following infomation collection request to the Office of Management and Budget (OMB) for review and approval in accordance with the Paperwork Reduction Act of 1995. The proposed information collection is published to obtain comments from the public and affected agencies. Comments are encouraged and will be accepted for ''sixty days'' until June 26, 2006. This process is conducted in accordance with 5 CFR 1320.10.

If you have comments especially on the estimated public burden or associagted response time, suggestions, or need a copy of the proposed information collection instrument with instructions or additional information, please contact Sheila R. Hall, Explosives Industry Programs Branch, Room 5000, 650 Massachusetts Avenue, NW., Washington, DC 20226.

Written comments and suggestions from the public and affected agencies concerning the proposed collection of information are encouraged. Your comments should address one or more of the following four points:

—Evaluate whether the proposed collection of information is necessary for the proper performance of the functions of the agency, including whether the information will have practical utility;
—Evaluate the accuracy of the agencies estimate of the burden of the proposed collection of information, including the validity of the methodology and assumptions used;
—Enhance the quality, utility, and clarity of the information to be collected; and
—Minimize the burden of the collection of information on those who are to respond, including through the use of appropriate automated, electronic, mechanical, or other technological collection techniques or other forms of information technology, e.g., permitting electronic submission of responses.

Overview of This Information Collection

(1) *Type of Information Collection:* Extension of a currently approved collection.

(2) *Title of the Form/Collection:* List of Responsible Persons.

(3) *Agency form number, if any, and the applicable component of the Department of Justice sponsoring the collection: Form Number:* None. Bureau of Alcohol, Tobacco, Firearms and Explosives.

(4) *Affected public who will be asked or required to respond, as well as a brief abstract:* Primary: Individuals or households. Other: Business or other-profit. All persons holding ATF explosives licenses or permits must report any change in responsible persons or employees authorized to possess explosive materials to ATF. Such report must be submitted within 30 days of the change and must include appropriate identifying information for each responsible person.

(5) *An estimate of the total number of respondents and the amount of time estimated for an average respondent to respond:* It is estimated that 50,000 respondents will take 1 hour to complete the report.

(6) *An estimate of the total public burden (in hours) associated with the collection:* There are an estimated 100,000 annual total burden hours associated with this collection.

If additional information is required contact: Robert B. Briggs, Department Clearance Officer, Policy and Planning Staff, Justice Management Division, Department of Justice, Patrick Henry Building, Suite 1600, 601 D Street NW., Washington, DC 20530.

Dated: April 19, 2006.

Robert B. Briggs,

Department Clearance Officer, Department of Justice.

[FR Doc. 06–3957 Filed 4–26–06; 8:45 am]

BILLING CODE 4410–FY–M

DEPARTMENT OF JUSTICE

Bureau of Alcohol, Tobacco, Firearms and Explosives

Agency Information Collection Activities: Proposed Collection; Comments Requested

ACTION: 60-day notice of information collection under review: Report of Stolen or Lost ATF Form 5400.30, Intrastate Purchase of Explosives Coupon.

The Department of Justice (DOJ), Bureau of Alcohol, Tobacco, Firearms

and Explosives (ATF), has submitted the following information collection request to the Office of Management and Budget (OMB) for review and approval in accordance with the Paperwork Reduction Act of 1995. The proposed information collection is published to obtain comments from the public and affected agencies. Comments are encouraged and will be accepted for ''sixty days'' until June 26, 2006. This process is conducted in accordance with 5 CFR 1320.10.

If you have comments especially on the estimated public burden or associated response time, suggestions, or need a copy of the proposed information collection instrument with instructions or additional information, please contact Sheila R. Hall, Explosives Industry Programs Branch, Room 5000, 650 Massachusetts Avenue, NW., Washington, DC 20226.

Written comments and suggestions from the public and affected agencies concerning the proposed collection of information are encouraged. Your comments should address one or more of the following four points:

—Evaluate whether the proposed collection of information is necessary for the proper performance of the functions of the agency, including whether the information will have practical utility;
—Evaluate the accuracy of the agencies estimate of the burden of the proposed collection of information, including the validity of the methodology and assumptions used;
—Enhance the quality, utility, and clarity of the information to be collected; and
—Minimize the burden of the collection of information on those who are to respond, including through the use of appropriate automated, electronic, mechanical, or other technological collection techniques or other forms of information technology, e.g., permitting electronic submission of responses.

Overview of This Information Collection

(1) *Type of Information Collection:* Extension of a currently approved collection.

(2) *Title of the Form/Collection:* Report of Stolen or Lost ATF F 5400.30, Intrastate Purchase Explosives Coupon.

(3) *Agency form number, if any, and the applicable component of the Department of Justice sponsoring the collection:* Form Number: ATF F 5400.30. Bureau of Alcohol, Tobacco, Firearms and Explosives.

(4) *Affected public who will be asked or required to respond, as well as a brief abstract:* Primary: Business or other for-profit. Other: Individuals or households. When any Intrastate Purchase of Explosives Coupon is stolen, lost or destroyed, the person losing possession will, upon discovery of the theft, loss, or destruction, immediately, but in all cases before 24 hours have elapsed since discovery, report the matter to the Director, Alcohol, Tobacco, Firearms and Explosives.

(5) *An estimate of the total number of respondents and the amount of time estimated for an average respondent to respond:* It is estimated that 800 respondents will complete a 20 minute form.

(6) *An estimate of the total public burden (in hours) associated with the collection:* There are an estimated 264 annual total burden hours associated with this collection.

If additional information is required contact: Robert B. Briggs, Department Clearance Officer, Policy and Planning Staff, Justice Management Division, Department of Justice, Patrick Henry Building, Suite 1600, 601 D Street NW., Washington, DC 20530.

Dated: April 19, 2006.

Robert B. Briggs,

Department Clearance Officer, Department of Justice.

[FR Doc. 06–3958 Filed 4–26–06; 8:45am]

BILLING CODE 4410–FY–M

DEPARTMENT OF JUSTICE

Bureau of Alcohol, Tobacco, Firearms and Explosives

Agency Information Collection Activities: Proposed Collection; Comments Requested

ACTION: 60-day notice of information collection under review: Relief of Disabilities.

The Department of Justice (DOJ), Bureau of Alcohol, Tobacco, Firearms and Explosives (ATF), has submitted the following information collection request to the Office of Management and Budget (OMB) for review and approval in accordance with the Paperwork Reduction Act of 1995. The proposed information collection is published to obtain comments from the public and affected agencies. Comments are encouraged and will be accepted for ''sixty days'' until June 26, 2006. This process is conducted in accordance with 5 CFR 1320.10.

If you have comments especially on the estimated public burden or associated response time, suggestions, or need a copy of the proposed information collection instrument with instructions or additional information, please contact Sheila R. Hall, Explosives Industry Programs Branch, Room 5000, 650 Massachusetts Avenue, NW., Washington, DC 20226.

Written comments and suggestions from the public and affected agencies concerning the proposed collection of information are encouraged. Your comments should address one or more of the following four points:

—Evaluate whether the proposed collection of information is necessary for the proper performance of the functions of the agency, including whether the information will have practical utility;
—Evaluate the accuracy of the agencies estimate of the burden of the proposed collection of information, including the validity of the methodology and assumptions used;
—Enhance the quality, utility, and clarity of the information to be collected; and
—Minimize the burden of the collection of information on those who are to respond, including through the use of appropriate automated, electronic, mechanical, or other technological collection techniques or other forms of information technology, e.g., permitting electronic submission of responses.

Overview of This Information Collection

(1) *Type of Information Collection:* Extension of a currently approved collection.

(2) *Title of the Form/Collection:* Relief of Disabilities.

(3) *Agency form number, if any, and the applicable component of the Department of Justice sponsoring the collection:* Form Number: none. Bureau of Alcohol, Tobacco, Firearms and Explosives.

(4) *Affected public who will be asked or required to respond, as well as a brief abstract:* Primary: Business or other for-profit. Other: None. Any person prohibited from shipping or transporting any explosive in or affecting interstate or foreign commerce or from receiving or possessing any explosive which has been shipped or transported in or affecting interstate or foreign commerce may make application for relief from disabilities.

(5) *An estimate of the total number of respondents and the amount of time estimated for an average respondent to respond:* It is estimated that 50 respondents will take 1 minute to support documentation for relief.

(6) *An estimate of the total public burden (in hours) associated with the*

collection: The estimated annual total burden associated with this collection is 1 hour.

If additional information is required contact: Robert B. Briggs, Department Clearance Officer, Policy and Planning Staff, Justice Management Division, Department of Justice, Patrick Henry Building, Suite 1600, 601 D Street NW., Washington, DC 20530.

Dated: April 19, 2006.

Robert B. Briggs,

Department Clearance Officer, Department of Justice.

[FR Doc. 06–3959 Filed 4–26–06; 8:45am]

BILLING CODE 4410–FY–M

DEPARTMENT OF JUSTICE

Bureau of Alcohol, Tobacco, Firearms and Explosives

Agency Information Collection Activities: Proposed Collection; Comments Requested

ACTION: 60-day notice of information collection under review: Notification of Change of Mailing or Premise Address.

The Department of Justice (DOJ), Bureau of Alcohol, Tobacco, Firearms and Explosives (ATF), has submitted the following information collection request to the Office of Management and Budget (OMB) for review and approval in accordance with the Paperwork Reduction Act of 1995. The proposed information collection is published to obtain comments from the public and affected agencies. Comments are encouraged and will be accepted for ''sixty days'' until June 26, 2006. This process is conducted in accordance with 5 CFR 1320.10.

If you have comments especially on the estimated public burden or associated response time, suggestions, or need a copy of the proposed information collection instrument with instructions or additional information, please contact Shelia R. Hall, Explosives Industry Programs Branch, Room 5000, 650 Massachusetts Avenue, NW., Washington, DC 20226.

Written comments and suggestions from the public and affected agencies concerning the proposed collection of information are encouraged. Your comments should address one or more of the following four points:

—Evaluate whether the proposed collection of information is necessary for the proper performance of the functions of the agency, including whether the information will have practical utility;

—Evaluate the accuracy of the agencies estimate of the burden of the proposed collection of information, including the validity of the methodology and assumptions used;

—Enhance the quality, utility, and clarity of the information to be collected; and

—Minimize the burden of the collection of information on those who are to respond, including through the use of appropriate automated, electronic, mechanical, or other technological collection techniques or other forms of information technology, e.g., permitting electronic submission of responses.

Overview of This Information Collection

(1) *Type of Information Collection:* Extension of a currently approved collection.

(2) *Title of the Form/Collection:* Notification of Change of Mailing or Premise Address.

(3) *Agency form number, if any, and the applicable component of the Department of Justice sponsoring the collection: Form Number:* None. Bureau of Alcohol, Tobacco, Firearms and Explosives.

(4) *Affected public who will be asked or required to respond, as well as a brief abstract:* Primary: Not-for-profit-institutions. Other: Business or other for-profit. Licensees and permittees whose mailing address will change must notify the Chief, Federal Explosives Licensing Center, at least 10 days before the change. The information is used by ATF to identify correct locations of explosives licensees/permittees and location of storage of exposive materials for purposes of inspection, as well as to notify permittee/licensees of any change in regulations or laws that may affect their business activities.

(5) *An estimate of the total number of respondents and the amount of time estimated for an average respondent to respond:* It is estimated that 1,000 respondents will take 10 minutes to respond via letter to the Federal Explosives Licensing Center.

(6) *An estimate of the total public burden (in hours) associated with the collection:* There are an estimated 170 annual total burden hours associated with this collection.

If additional information is required contact: Robert B. Briggs, Department Clearance Officer, Policy and Planning Staff, Justice Management Division, Department of Justice, Patrick Henry Building, Suite 1600, 601 D Street NW., Washington, DC 20530.

Dated: April 19, 2006.

Robert B. Briggs,

Department Clearance Officer, Department of Justice.

[FR Doc. 06–3960 Filed 4–26–06; 8:45am]

BILLING CODE 4410–FY–M

DEPARTMENT OF JUSTICE

Bureau of Alcohol, Tobacco, Firearms and Explosives

Agency Information Collection Activities: Proposed Collection; Comments Requested

ACTION: 60-Day notice of information collection under review: Appeals of Background Checks.

The Department of Justice (DOJ), Bureau of Alcohol, Tobacco, Firearms and Explosives (ATF), has submitted the following information collection request to the Office of Management and Budget (OMB) for review and approval in accordance with the Paperwork Reduction Act of 1995. The proposed information collection is published to obtain comments from the public and affected agencies. Comments are encouraged and will be accepted for ''sixty days'' until June 26, 2006. This process is conducted in accordance with 5 CFR 1320.10.

If you have comments especially on the estimated public burden or associated response time, suggestions, or need a copy of the proposed information collection instrument with instructions or additional information, please contact Sheila R. Hall, Explosives Industry Programs Branch, Room 5000, 6500 Massachusetts Avenue, NW., Washington, DC 20226.

Written comments and suggestions from the public and affected agencies concerning the proposed collection of information are encouraged. Your comments should address one or more of the following four points.

—Evaluate whether the proposed collection of information is necessary for the proper performance of the functions of the agency, including whether the information will have practical utility;

—Evaluate the accuracy of the agencies estimate of the burden of the proposed collection of information, including the validity of the methodology and assumptions used;

—Enhance the quality, utility, and clarity of the information to be collected; and

—Minimize the burden of the collection of information on those who are to respond, including through the use of

appropriate automated, electronic, mechanical, or other technological collection techniques or other forms of information technology, *e.g.,* permitting electronic submission of responses

Overview of This Information Collection

(1) *Type of Information Collection:* Extension of a currently approved collection.

(2) *Title of the Form/Collection:* Appeals of Background Checks.

(3) *Agency form number, if any, and the applicable component of the Department of Justice sponsoring the collection:* Form Number: None. Bureau of Alcohol, Tobacco, Firearms and Explosives.

(4) *Affected public who will be asked or required to respond, as well as a brief abstract:* Primary: Business or other for-profit. Other: Individuals or households. The purpose of the collection is to allow applicants, employees, or other affected personnel the opportunity to appeal in writing the results of a background check conducted to satisfy their eligibility to possess explosive materials. The appeal request must include appropriate documentation or record(s) establishing the legal and/or factual basis for the challenge.

(5) *An estimate of the total number of respondents and the amount of time estimated for an average respondent to respond:* It is estimated that 500 respondents will spend 2 hours completing the required documentation for the appeal.

(6) *An estimate of the total public burden (in hours) associated with the collection:* There are an estimated 1,000 annual total burden hours associated with this collection.

If additional information is required contact: Robert E. Briggs, Department Clearance Officer, Policy and Planning Staff, Justice Management Division, Department of Justice, Patrick Henry Building, Suite 1600, 601 D Street NW., Washington, DC 20530.

Dated: April 19, 2006.

Robert B. Briggs,

Department Clearance Officer, Department of Justice.

[FR Doc. 06–3961 Filed 4–26–06; 8:45am]

BILLING CODE 4410–FY–M

DEPARTMENT OF JUSTICE

Bureau of Alcohol, Tobacco, Firearms and Explosives

Agency Information Collection Activities: Proposed Collection; Comment Requested

ACTION: 60-Day notice of information collection under review certification of knowledge of state laws, submission of water pollution act.

The Department of Justice (DOJ), Bureau of Alcohol, Tobacco, Firearms and Explosives (ATF), has submitted the following information collection request to the Office of Management and Budget (OMB) for review and approval in accordance with the Paperwork Reduction Act of 1995. The proposed information collection is published to obtain comments from the public and affected agencies. Comments are encouraged and will be accepted for ''sixty days'' until June 26, 2006. This process is conducted in accordance with 5 CFR 1320.10.

If you have comments especially on the estimated public burden on associated response time, suggestions, or need a copy of the proposed information collection instrument with instructions or additional information, please contact Sheila R. Hall, Explosives Industry Programs Branch, Room 5000, 650 Massachusetts Avenue, NW., Washington, DC 20226.

Written comments and suggestions from the public and affected concerning the proposed collection of information are encouraged. Your comments should address one or more of the following four points:

—Evaluate whether the proposed collection of information is necessary for the proper performance of the functions of the agency, including whether the information will have practical utility;

—Evaluate the accuracy of the agencies estimate of the burden of the proposed collection of information, including the validity of the methodology and assumptions used;

—Enhance the quality, utility, and clarity of the information to be collected; and

—Minimize the burden of the collection of information on those who are to respond, including through the use of appropriate automated, electronic, mechanical, or other technological collection techniques or other forms of information technology, *e.g.,* permitting electronic submission of responses.

Overview of This Information Collection

(1) *Type of Information Collection:* Extension of a currently approved collection.

(2) *Title of the Form/Collection:* Certification of Knowledge of State Laws, Submission of Water Pollution Act.

(3) *Agency form number, if any, and the applicable component of the Department of Justice sponsoring the collection:* Form Number: None. Bureau of Alcohol, Tobacco, Firearms and Explosives.

(4) *Affected public who will be asked or required to respond, as well as a brief abstract:* Primary; Individuals or households. Other: None. Persons who apply for a permit to purchase explosives intrastate must certify in writing that he is familiar with and understands all published State laws and local ordinances relating to explosive materials for the location in which he intends to do business; and submit this certificate required by section 21 of the Federal Water Pollution Control Act.

(5) *An estimate of the total number of respondents and the amount of time estimated for an average respondent to respond:* It is estimated that 50,000 respondents will take a estimated time of 30 seconds to submit the required information.

(6) *An estimate of the total public burden (in hours) associated with the collection:* There are an estimated 416 annual total burden hours associated with this collection.

If additional information is required contact: Robert B. Briggs, Depaerment Clearance Officer, Policy and Planning Staff, Justice Management Division, Department of Justice, Patrick Henry Building, Suite 1600, 601 D Street NW., Washington, DC 20530.

Dated: April 19, 2006.

Robert B. Briggs,

Department Clearance Officer, Department of Justice.

[FR Doc. 06–3962 Filed 4–26–06; 8:45 am]

BILLING CODE 4410–FY–M

DEPARTMENT OF JUSTICE

Bureau of Alcohol, Tobacco, Firearms and Explosives

Agency Information Collection Activities: Proposed Collection; Comments Requested

ACTION: 60-Day notice of information collection under review: Application for Limited Permit.

The Department of Justice (DOJ), Bureau of Alcohol, Tobacco, Firearms and Explosives (ATF), has submitted the following information collection request to the Office of Management and Budget (OMB) for review and approval in accordance with the Paperwork Reduction Act of 1995. The proposed information collection is published to obtain comments from the public and affected agencies. Comments are encouraged and will be accepted for ''sixty days'' until June 26, 2006. This process is conducted in accordance with 5 CFR 1320.10.

If you have comments especially on the estimated public burden or associated response time, suggestions, or need a copy of the proposed information collection instrument with instructions or additional information, please contact Sheila R. Hall, Public Explosives Industry Programs Branch, Room 5000, 650 Massachusetts Avenue, NW., Washington, DC 20226.

Written comments and suggestions from the public and affected agencies concerning the proposed collection of information are encouraged. Your comments should address one or more of the following four points:

—Evaluate whether the proposed collection of information is necessary for the proper performance of the functions of the agency, including whether the information will have practical utility;
—Evaluate the accuracy of the agencies estimate of the burden of the proposed collection of information, including the validity of the methodology and assumptions used;
—Enhance the quality, utility, and clarity of the information to be collected; and
—Minimize the burden of the collection of information on those who are to respond, including through the use of appropriate automated, electronic, mechanical, or other technological collection techniques or other forms of information technology, e.g., permitting electronic submission of responses.

Overview of This Information Collection

(1) *Type of Information Collection:* Extension of a currently approved collection.

(2) *Title of the Form/Collection:* Application for Limited Permit.

(3) *Agency form number, if any, and the applicable component of the Department of Justice sponsoring the collection:* Form Number: None. Bureau of Alcohol, Tobacco, Firearms and Explosives.

(4) *Affected public who will be asked or required to respond, as well as a brief abstract:* Primary: Business or other for-profit. Other: None. Any person who intends to acquire explosive materials from a licensee or permittee in the State in which that person resides on no more than 6 occasions per year, must obtain a limited permit from ATF.

(5) *An estimate of the total number of respondents and the amount of time estimated for an average respondent to respond:* It is estimated that 40,000 respondents will take 30 seconds to submit the required information.

(6) An estimate of the total public burden (in hours) associated with the collection: There are an estimated 2,000 annual total burden hours associated with this collection.

If additional information is required contact: Robert B. Briggs, Department Clearance Officer, Policy and Planning Staff, Justice Management Division, Department of Justice, Patrick Henry Building, Suite 1600, 601 D Street NW., Washington, DC 20530.

Dated: April 19, 2006.

Robert B. Briggs,

Department Clearance Officer, Department of Justice.

[FR Doc. 06–3963 Filed 4–26–05; 8:45 am]

BILLING CODE 4410–FY–M

DEPARTMENT OF JUSTICE

Bureau of Alcohol, Tobacco, Firearms and Explosives

Agency Information Collection Activities: Proposed Collection; Comments Requested

ACTION: 60-Day notice of information collection under review: Limited Permittee Transaction Report.

The Department of Justice (DOJ), Bureau of Alcohol, Tobacco, Firearms and Explosives (ATF), has submitted the following information collection request to the Office of Management and Budget (OMB) for review and approval in accordance with the Paperwork Reduction Act of 1995. The proposed information collection is published to obtain comments from the public and affected agencies. Comments are encouraged and will be accepted for ''sixty days'' until June 26, 2006. This process is conducted in accordance with 5 CFR 1320.10.

If your have comments especially on the estimated public burden or associated response time, suggestions, or need a copy of the proposed information collection instrument with instructions or additional information, please contact Sheila R. Hall, Explosives Industry Programs Branch, Room 5000, 650 Massachusetts Avenue, NW., Washington, DC 20226.

Written comments and suggestions from the public and affected agencies concerning the proposed collection of information are encouraged. Your comments should address one or more of the following four points:

—Evaluate whether the proposed collection of information is necessary for the proper performance of the functions of the agency, including whether the information will have practical utility;
—Evaluate the accuracy of the agencies estimate of the burden of the proposed collection of information, including the validity of the methodology and assumptions used;
—Enhance the quality, utility, and clarify of the information to be collected; and
—Minimize the burden of the collection of information on those who are to respond, including through the use of appropriate automated, electronic, mechanical, or other technological collection techniques of other forms of information technology, e.g., permitting electronic submission of responses.

Overview of This Information Collection

(1) *Type of Information Collection:* Extension of a currently approved collection.

(2) *Title of the Form/Collection:* Limited Permittee Transaction Report.

(3) *Agency form number, if any, and the applicable component of the Department of Justice sponsoring the collection:* Form Number: ATF F 5400.4 Bureau of Alcohol, Tobacco, Firearms and Explosives.

(4) *Affected public who will be asked or required to respond, as well as a brief abstract:* Primary: Individuals or households. Other: Business or other for-profit. The Limited permittees are required to complete ATF 5400.4 prior to receiving explosive materials. The form verifies that all persons who are purchasing explosive materials have the proper Federal permit and to ensure that such persons have appropriate facilities for storage of the explosive materials.

(5) *An estimate of the total number of respondents and the amount of time estimated for an average respondent to respond:* It is estimated that 400 respondents will complete a 20 minute form.

An estimate of the total public burden (in hours) associated with the collection: There are an estimated 792 annual total

burden hours associated with this collection.

If additional information is required contact: Robert B. Briggs, Department Clearance Officer, Policy and Planning Staff, Justice Management Division, Department of Justice, Patrick Henry Building, Suite 1600, 601 D Street, NW., Washington, DC 20530.

Dated: April 19, 2006.

Robert B. Briggs,

Department Clearance Officer, Department of Justice.

[FR Doc. 06–3964 Filed 4–26–06; 8:45am]

BILLING CODE 4410–FY–M

DEPARTMENT OF JUSTICE

Bureau of Alcohol, Tobacco, Firearms and Explosives

Agency Information Collection Activities: Proposed Collection; Comments Requested

ACTION: 60-day notice of information collection under review: Furnishing of Samples.

The Department of Justice (DOJ), Bureau of Alcohol, Tobacco, Firearms and Explosives (ATF), has submitted the following information collection request to the Office of Management and Budget (OMB) for review and approval in accordance with the Paperwork Reduction Act of 1995. The proposed information collection is published to obtain comments from the public and affected agencies. Comments are encouraged and will be accepted for ''sixty days'' until June 26, 2006. This process is conducted in accordance with 5 CFR 1320.10.

If you have comments especially on the estimated public burden or associated response time, suggestions, or need a copy of the proposed information collection instrument with instructions or additional information, please contact Sheila Hall, Explosives Industry Programs Branch, Room 5000, 650 Massachusetts Avenue, NW., Washington, DC 20226.

Written comments and suggestions from the public and affected agencies concerning the proposed collection of information are encouraged. Your comments should address one or more of the following four points:

—Evaluate whether the proposed collection of information is necessary for the proper performance of the functions of the agency, including whether the information will have practical utility;

—Evaluate the accuracy of the agencies estimate of the burden of the proposed collection of information, including the validity of the methodology and assumptions used;

—Enhance the quality, utility, and clarity of the information to be collected; and

—Minimize the burden of the collection of information on those who are to respond, including through the use of appropriate automated, electronic, mechanical, or other technological collection techniques or other forms of information technology, e.g., permitting electronic submission of responses.

Overview of This Information Collection

(1) *Type of Information Collection:* Extension of a currently approved collection.

(2) *Title of the Form/Collection:* Furnishing of Samples.

(3) *Agency form number, if any, and the applicable component of the Department of Justice sponsoring the collection:* Form Number: None. Bureau of Alcohol, Tobacco, Firearms and Explosives.

(4) *Affected public who will be asked or required to respond, as well as a brief abstract:* Primary: Business or other for-profit. Other: None. Licensed manufacturers and licensed importers and persons who manufacture or import explosive materials or ammonium nitrate must, when required by the Director, furnish samples of such explosive materials or ammonium nitrate; information on chemical composition of those products; and any other information that the Director determines is relevant to the identification of the ammonium nitrate.

(5) *An estimate of the total number of respondents and the amount of time estimated for an average respondent to respond:* It is estimated that 2,350 respondents will 30 minutes to submit the samples.

(6) *An estimate of the total public burden (in hours) associated with the collection:* There are an estimated 1,175 annual total burden hours associated with this collection.

If additional information is required contact: Robert B. Briggs, Department Clearance Officer, Policy and Planning Staff, Justice Management Division, Department of Justice, Patrick Henry Building, Suite 1600, 601 D Street NW., Washington, DC 20530.

Dated: April 19, 2006.

Robert B. Briggs,

Department Clearance Officer, Department of Justice.

[FR Doc. 06–3965 Filed 4–26–06; 8:45 am]

BILLING CODE 4410–FY–M

DEPARTMENT OF JUSTICE

Bureau of Alcohol, Tobacco, Firearms and Explosives

Agency Information Collection Activities: Proposed Collection; Comments Requested

ACTION: 60-day notice of information collection under review: Transactions Among Licensees/Permittees, Limited.

The Department of Justice (DOJ), Bureau of Alcohol, Tobacco, Firearms and Explosives (ATF), has submitted the following information collection request to the Office of Management and Budget (OMB) for review and approval in accordance with the Paperwork Reduction Act of 1995. The proposed information collection is published to obtain comments from the public and affected agencies. Comments are encouraged and will be accepted for ''sixty-days'' until June 26, 2006. This process is conducted in accordance with 5 CFR 1320.10.

If you have comments especially on the estimated public burden or associated response time, suggestions, or need a copy of the proposed information collection instrument with instructions or additional information, please contact Sheila R. Hall, Explosives Industry Programs Branch, Room 5000, 650 Massachusetts Avenue, NW., Washington, DC 20226.

Written comments and suggestions from the public and affected agencies concerning the proposed collection of information are encouraged. Your comments should address one or more of the following four points:

—Evaluate whether the proposed collection of information is necessary for the proper performance of the functions of the agency, including whether the information will have practical utility;

—Evaluate the accuracy of the agencies estimate of the burden of the proposed collection of information, including the validity of the methodology and assumptions used;

—Enhance the quality, utility, and clarity of the information to be collected; and

—Minimize the burden of the collection of information on those who are to respond, including through the use of appropriate automated, electronic, mechanical, or other technological collection techniques or other forms of information technology, e.g., permitting electronic submission of responses.

Overview of This Information Collection

(1) *Type of Information Collection:* Extension of a currently approved collection.

(2) *Title of the Form/Collection:* Transactions Among Licensees/Permittees, Limited.

(3) *Agency form number, if any, and the applicable component of the Department of Justice sponsoring the collection:* Form Number: None. Bureau of Alcohol, Tobacco, Firearms and Explosives.

(4) *Affected public who will be asked or required to respond, as well as a brief abstract:* Primary: Business or other for-profit. Other: None. A licensed importer, licensed manufacturer, or licensed dealer may distribute explosive materials to a holder of a limited permit if the holder of such permit is a resident of the same State in which the licensee's business premise is located. A holder of a limited permit may receive explosive materials on no more than 6 separate occasions during the one-year period of the permit. A holder of a user permit may dispose of surplus stocks of explosive materials to the holder of a limited permit who is a resident of the same State in which the premises of the holder of the user permit are located. A licensed importer, licensed manufacturer, licensed dealer or permittee, must, prior to delivering the explosive materials, obtain from the limited permittee a current list of the persons who are authorized to accept deliveries of the explosive materials on behalf of the limited permittee

(5) *An estimate of the total number of respondents and the amount of time estimated for an average respondent to respond:* It is estimated that 50,000 respondents will take 30 minutes to comply with the required information.

(6) *An estimate of the total public burden (in hours) associated with the collection:* There are an estimated 25,000 annual total burden hours associated with this collection.

If additional information is required contact: Robert B. Briggs, Department Clearance Officer, Policy and Planning Staff, Justice Management Division, Department of Justice, Patrick Henry Building, Suite 1600, 601 D Street, NW., Washington, DC 20530.

Dated: April 19, 2006

Robert B. Briggs,

Department Clearance Officer, Department of Justice.

[FR Doc. 06–3966 Filed 4–26–06; 8:45am]

BILLING CODE 4410–FY–M

DEPARTMENT OF JUSTICE

Antitrust Division

Notice Pursuant to the National Cooperative Research and Production Act of 1993—Collaboration Agreement for High Performance Buildings

Notice is hereby given that, on March 23, 2006, pursuant to section 6(a) of the National Cooperative Research and Production Act of 1993, 15 U.S.C. 4301 *et seq.* (''the Act''), Collaboration Agreement with High Performance Buildings has filed written notifications simultaneously with the Attorney General and the Federal Trade Commission disclosing changes in its membership. The notifications were filed for the purpose of extending the Act's provisions limiting the recovery of antitrust plaintiffs to actual damages under specified circumstances. Specifically, Green Building Studio, Inc., Santa Rosa, CA has been added as a party to this venture.

No other changes have been made in either the membership or planned activity of the group research project. Membership in this group research project remains open, and Collaboration Agreement for High Performance Buildings intends to file additional written notification disclosing all changes in membership.

On May 25, 2004, Collaboration Agreement with High Performance Buildings filed its original notification pursuant to Section 6(a) of the Act. The Department of Justice published a notice in the **Federal Register** pursuant to Section 6(b) of the Act on June 25, 2004 (69 FR 35678).

Dorothy B. Fountain,

Deputy Director of Operations, Antitrust Division.

[FR Doc. 06–3954 Filed 4–26–06; 8:45 am]

BILLING CODE 4410–11–M

DEPARTMENT OF JUSTICE

Federal Bureau of Investigation

Agency Information Collection Activities: Proposed Collection, Comments Requested

ACTION: 60-day notice of information collection under review: Revision of a currently approved collection; Return A-Monthly Return of Offenses Known to the Police; Supplement to Return A-Monthly Return of Offenses Known to the Police.

The Department of Justice, Federal Bureau of Investigation, Criminal Justice Information Services Division has submitted the following information collection request to the Office of Management and Budget (OMB) for review and clearance in accordance with established review procedures of the Paperwork Reduction Act of 1995. The proposed information collection is published to obtain comments from the public and affected agencies. Comments are encouraged and will be accepted until June 26, 2006. This process is conducted in accordance with 5 CFR 1320.10.

All comments and suggestions, or questions regarding additional information, to include obtaining a copy of the proposed information collection instrument with instructions, should be directed to Gregory E. Scarbro, Unit Chief, Federal Bureau of Investigation, Criminal Justice Information Services Division (CJIS), Module E–3, 1000 Custer Hollow Road, Clarksburg, West Virginia 26306, or facsimile to (304) 625–3566.

Written comments and suggestions from the public and affected agencies concerning the proposed collection of information are encouraged. Comments should address one or more of the following four points:

(1) Evaluate whether the proposed collection of information is necessary for the proper performance of the functions of the agency, including whether the information will have practical utility;

(2) Evaluate the accuracy of the agency's estimate of the burden of the proposed collection of information, including the validity of the methodology and assumptions used;

(3) Enhance the quality, utility, and clarity of the information to be collected; and

(4) Minimize the burden of the collection of information on those who are to respond, including through the use of appropriate automated, electronic, mechanical, or other technological collection techniques of other forms of information technology, e.g., permitting electronic submission of responses.

Overview of This Information Collection

(1) *Type of information collection:* Revision of a currently approved collection.

(2) *The title of the form/collection:* Return A-Monthly Return of Offenses Known to the Police and Supplement to Return A-Monthly Return of Offenses Known to the Police.

(3) *The agency form number, if any, and the applicable component of the department sponsoring the collection:* Forms 1–720, 1–720a, 1–720b, 1–720c,

1–720d, 1–720e, and 1–706; Criminal Justice Information Services Division, Federal Bureau of Investigation, Department of Justice.

(4) *Affected public who will be asked or required to respond, as well as a brief abstract:* Primary: City, county, State, Federal, adn tribal law enforcement agencies. This collection is needed to collect information on Part I offense, rate, trend, and clearance data as well as stolen and recovered monetary values of stolen property throughout the United States. Data are tabulated and published in the semiannual and preliminary reports and the annual Crime in the United States.

(5) *An estimate of the total number of respondents and the amount of time estimated for an average respondent to respond:* There are approximately 17,499 law enforcement agency respondents at 10 minutes for hard copy and 5 minutes for electronic submissions for the Return A and 11 minutes for hard copy and 5 minutes for electronic submissions for the Supplement to Return A.

(6) An estimate of the total public burden (in hours) associated with this collection: There are approximately 48,755 hours, annual burden, associated with this information collection.

If additional information is required contact: Robert B. Briggs, Department Clearance Officer, Information Management and Security Staff, Justice Management Division, United States Department of Justice, Patrick Henry Building, Suite 1600, 601 D Street, NW., Washington, DC 20530.

Dated: April 19, 2006.

Robert B. Briggs,

Department Clearance Officer, United States Department of Justice.

[FR Doc. 06–3967 Filed 4–26–06; 8:45 am]

BILLING CODE 4410–02–M

DEPARTMENT OF JUSTICE

Federal Bureau of Investigation

Agency Information Collection Activities: Proposed Collection, Comments Requested

ACTION: 60-day Notice of Information Collection Under Review: Extension of a currently approved collection; Bioterrorism Preparedness Act: Entity/Individual Information.

The Department of Justice, Federal Bureau of Investigation, Criminal Justice Information Services Division has submitted the following information collection request to the Office of Management and Budget (OMB) for review and clearance in accordance with established review procedures of the Paperwork Reduction Act of 1995. The proposed information collection is published to obtain comments from the public and affected agencies. Comments are encouraged and will be accepted until June 26, 2006. This process is conducted in accordance with 5 CFR 1320.10.

All comments and suggestions, or questions regarding additional information, to include obtaining a copy of the proposed information collection instrument with instructions, should be directed to John E. Strovers, CJIS Division Intelligence Group, Federal Bureau of Investigation, Criminal Justice Information Services Division, (CJIS), Module E–3, 1000 Custer Hollow Road, Clarksburg, West Virginia 26306; facsimile (304) 625–5393.

Written comments and suggestions from the public and affected agencies concerning the proposed collection of information are encouraged. Comments should address one or more of the following four points:

(1) Evaluate whether the proposed collection of information is necessary for the proper performance of the functions of the agency, including whether the information will have practical utility;

(2) Evaluate the accuracy of the agency's estimate of the burden of the proposed collection of information, including the validity of the methodology and assumptions used;

(3) Enhance the quality, utility, and clarity of the information to be collected; and

(4) Minimize the burden of the collection of information on those who are to respond, including through the use of appropriate automated, electronic, mechanical, or other technological collection techniques of other forms of information technology, e.g., permitting electronic submission of responses.

Overview of This Information Collection

(1) *Type of information collection:* Extension of current collection.

(2) *The title of the form/collection:* Federal Bureau of Investigation Bioterrorism Preparedness Act: Entity/Individual Information.

(3) *The agency form number, if any, and the applicable component of the department sponsoring the collection:* Forms FD–961; Criminal Justice Information Services Division, Federal Bureau of Investigation, Department of Justice.

(4) *Affected public who will be asked or required to respond, as well as a brief abstract:* Primary: City, county, state, federal, individuals, business or other for profit, and not-for-profit institute.

This collection is needed to receive names and other identifying information submitted by individuals requesting access to specific agents or toxins, and consult with appropriate officials of the Department of Health and Human Services and the Department of Agriculture as to whether certain individuals specified in the provisions should be denied access to or granted limited access to specific agents.

(5) *An estimate of the total number of respondents and the amount of time estimated for an average respondent to respond:* There are approximately 3,184 (FY 2005) respondents at 45 minutes for FD–961 Form.

(6) *An estimate of the total public burden (in hours) associated with this collection:* There are approximately 2,388 hours, annual burden, associated with this information collection.

If additional information is required contact: Robert B. Briggs, Department Clearance Officer, Information Management and Security Staff, Justice Management Division, United States Department of Justice, Patrick Henry Building, Suite 1600, 601 D Street, NW., Washington, DC 20530.

Dated: April 22, 2006.

Robert B. Briggs,

Department Clearance Officer, United States Department of Justice.

[FR Doc. 06–3968 Filed 4–26–06; 8:45 am]

BILLING CODE 4410–02–M

DEPARTMENT OF JUSTICE

Federal Bureau of Investigation

Agency Information Collection Activities: Proposed Collection, Comments Requested

ACTION: 60-day notice of information collection under review; Extension of current collection; Hate Crime Incident Report; Quarterly Hate Crime Report.

The Department of Justice, Federal Bureau of Investigation, Criminal Justice Information Services Division has submitted the following information collection request to the Office of Management and Budget (OMB) for review and clearance in accordance with established review procedures of the Paperwork Reduction Act of 1995. The proposed information collection is published to obtain comments from the public and affected agencies. Comments are encouraged and will be accepted until June 26, 2006. This process is

conducted in accordance with 5 CFR 1320.10.

All comments and suggestions, or questions regarding additional information, to include obtaining a copy of the proposed information collection instrument with instructions, should be directed to Gregory E. Scarbro, Unit Chief, Federal Bureau of Investigation, Criminal Justice Information Services Division (CJIS), Module E–3, 1000 Custer Hollow Road, Clarksburg, West Virginia 26306, or facsimile to (304) 625–3566.

Written comments and suggestions from the public and affected agencies concerning the proposed collection of information are encouraged. Comments should address one or more of the following four points:

(1) Evaluate whether the proposed collection of information is necessary for the proper performance of the functions of the agency, including whether the information will have practical utility;

(2) Evaluate the accuracy of the agency's estimate of the burden of the proposed collection of information, including the validity of the methodology and assumptions used;

(3) Enhance the quality, utility, and clarity of the information to be collected; and

(4) Minimize the burden of the collection of information on those who are to respond, including through the use of appropriate automated, electronic, mechanical, or other technological collection techniques of other forms of information technology, e.g., permitting electronic submission of responses.

Overview of This Information Collection

(1) *Type of information collection:* Extension of current collection.

(2) *The title of the form/collection:* Hate Crime Incident Report and the Quarterly Hate Crime Report.

(3) *The agency form number, if any, and the applicable component of the department sponsoring the collection:* Forms 1–699 and 1–700; Criminal Justice Information Services Division, Federal Bureau of Investigation, Department of Justice.

(4) *Affected public who will be asked or required to respond, as well as a brief abstract:* Primary: City, county, state, federal, and tribal law enforcement agencies.

This collection is needed to collect information on hate crime incidents committed throughout the United States. Data are tabulated and published in the annual Crime in the United States and Hate Crime Statistics.

(5) *An estimate of the total number of respondents and the amount of time estimated for an average respondent to respond:* There are approximately 12,711 law enforcement agency respondents at 9 minutes for hard copy and 5 minutes for electronic submissions for 1–699 and 1–700.

(6) *An estimate of the total public burden (in hours) associated with this collection:* There are approximately 5,170 hours, annual burden, associated with this information collection.

If additional information is required contact: Robert B. Briggs, Department Clearance Officer, Information Management and Security Staff, Justice Management Division, United States Department of Justice, Patrick Henry Building, Suite 1600, 601 D Street, NW., Washington, DC 20530.

Dated: April 19, 2006.

Robert B. Briggs,

Department Clearance Officer, United States Department of Justice.

[FR Doc. 06–3969 Filed 4–26–06; 8:45 am]

BILLING CODE 4410–02–M

DEPARTMENT OF JUSTICE

Office of Justice Programs

Agency Information Collection Activities: Proposed Collection; Comments Requested

ACTION: 60-day notice of information collection under review: New HOPE II: Faith Based and Community Organization Program Evaluation Study.

The Department of Justice, Office of Justice Programs, National Institute of Justice has submitted the following information collection request to the Office of Management and Budget (OMB) for review and approval in accordance with review procedures of the Paperwork Reduction Act of 1995. The proposed information collection is published to obtain comments from the public and affected agencies. Comments are encouraged and will be accepted for ''sixty days'' until June 26, 2006. This process is conducted in accordance with 5 CFR 1320.10.

If you have comments especially on the estimated public burden or associated response time, suggestions, or need a copy of the proposed information collection instrument with instructions or additional information, please contact Carrie Mulford, Social Science Analyst (202) 307–2959, National Institute of Justice, Office of Justice Programs, U.S. Department of Justice, 810 Seventh Street NW., Washington, DC 20531.

Written comments and suggestions from the public and affected agencies concerning proposed collection of information are encouraged. Your comments should address one or more of the following four points:

(1) Evaluate whether the proposed collection of information is necessary for the proper performance of the functions of the agency, including whether the information will have practical utility;

(2) Evaluate the accuracy of the agencies estimate of the burden of the proposed collection of information, including the validity of the methodology and assumptions used;

(3) Enhance the quality, utility, and clarity of the information to be collected; and

(4) Minimize the burden of the collection of information on those who are to respond, including through the use of appropriate automated, electronic, mechanical, or other technological collection techniques or other forms of information technology, e.g. permitting electronic submission of responses.

Overview of This Information Collection

(1) *Type of Information Collection:* New Collection.

(2) *Title of the Form/Collection:* HOPE II: Faith Based and Community Organization Program Evaluation Study.

(3) *Agency form number, if any, and the applicable component of the department sponsoring the collection:* OJP Form Number XXXXX. National Institute of Justice, Office of Justice Programs, Department of Justice.

(4) *Affected public who will be asked or required to respond, as well as a brief abstract:* Affected public includes faith based and community organization (FBCO) administrators or other persons responsible for providing services to victims of crime at organizations that received HOPE II grants. The survey will collect information on how FBCOs utilized grant money. The survey will be administered at two periods: immediately following the grant period and one year after the end of the grant period to collect both short- and long-term outcomes. Baseline information was collected as part of the grant application process. Key questions are:

(1) How has the FBCOs' service delivery changed between baseline and follow-up periods?

(2) How have the FBCOs' organizational capabilities changed between baseline and follow-up periods?

(3) How have the FBCOs' priorities and practices changed beween baseline and follow-up periods?

(4) What partnerships and cooperative agreements have been put in place to support the program?

(5) How do the changes observed in sub-grantees' results and practices differ from those observed in the FBCOs in a comparison group that did not receive grant money or technical assistance?

(6) Do outcomes differ across various program types and grantee characteristics?

The data will be used to advise the National Institute of Justice and the Office of Victims of Crime.

(5) *An estimate of the total number of respondents and the amount of time estimated for an average respondent to respond:* The estimated number of respondents is 100. The survey will take an average of 25 minutes to complete.

(6) *An estimate of the total public burden (in hours) associated with this collection.* An estimated 42 hours of public burden is associated with this collection.

If additional information is required contact: Robert B. Briggs, Department Clearance Officer, Information Management and Security Staff, Justice Management Division, Department of Justice, Patrick Henry Building, Suite 1600, 601 D Street, NW., Washington, DC 20530.

Dated: April 19, 2005.

Robert B. Briggs,

Department Clearance Officer, Department of Justice.

[FR Doc. 06–3970 Filed 4–26–06; 8:45 am]

BILLING CODE 4410–18–M

NATIONAL ARCHIVES AND RECORDS ADMINISTRATION

Agency Information Collection Activities: Submission for OMB Review; Comment Request

AGENCY: National Archives and Records Administration (NARA).

ACTION: Notice.

SUMMARY: NARA is giving public notice that the agency has submitted to OMB for approval the information collection described in this notice. The public is invited to comment on the proposed information collection pursuant to the Paperwork Reduction Act of 1995.

DATES: Written comments must be submitted to OMB at the address below on or before May 30, 2006 to be assured of consideration.

ADDRESSES: Send comments to Desk Officer for NARA, Office of Management and Budget, New Executive Office Building, Washington, DC 20503; fax: 202–395–5167.

FOR FURTHER INFORMATION CONTACT: Requests for additional information or copies of the proposed information collection and supporting statement should be directed to Tamee Fechhelm at telephone number 301–837–1694 or fax number 301–837–3213.

SUPPLEMENTARY INFORMATION: Pursuant to the Paperwork Reduction Act of 1995 (Pub. L. 104–13), NARA invites the general public and other Federal agencies to comment on proposed information collections. NARA published a notice of proposed collection for this information collection on February 15, 2006 (71 FR 8002 and 8003). No comments were received. NARA has submitted the described information collection to OMB for approval.

In response to this notice, comments and suggestions should address one or more of the following points: (a) Whether the proposed information collection is necessary for the proper performance of the functions of NARA; (b) the accuracy of NARA's estimate of the burden of the proposed information collection; (c) ways to enhance the quality, utility, and clarity of the information to be collected; and (d) ways to minimize the burden of the collection of information on respondents, including the use of information technology; and (e) whether small businesses are affected by this collection. In this notice, NARA is soliciting comments concerning the following information collection:

Title: Financial Disclosure Report.

OMB number: 3095–0058.

Agency form number: Standard Form 714.

Type of review: Regular.

Affected public: Business or other for-profit, Federal government.

Estimated number of respondents: 25,897.

Estimated time per response: 2 hours.

Frequency of response: On occasion.

Estimated total annual burden hours: 51,794 hours.

Abstract: Executive Order 12958 as amended, ''Classified National Security Information'' authorizes the Information Security Oversight Office to develop standard forms that promote the implementation of the Government's security classification program. These forms promote consistency and uniformity in the protection of classified information.

The Financial Disclosure Report contains information that is used to make personnel security determinations, including whether to grant a security clearance; to allow access to classified information, sensitive areas, and equipment; or to permit assignment to sensitive national security positions. The data may later be used as a part of a review process to evaluate continued eligibility for access to classified information or as evidence in legal proceedings.

The Financial Disclosure Report helps law enforcement obtain pertinent information in the preliminary stages of potential espionage and counter terrorism cases.

Dated: April 18, 2006.

Martha Morphy,

Acting Assistant Archivist for Information Services.

[FR Doc. E6–6341 Filed 4–26–06; 8:45 am]

BILLING CODE 7515–01–P

NUCLEAR REGULATORY COMMISSION

Potentially Nonconforming HEMYC and MT Fire Barrier Configurations

AGENCY: Nuclear Regulatory Commission.

ACTION: Notice of issuance.

SUMMARY: The U.S. Nuclear Regulatory Commission (NRC) has issued Generic Letter (GL) 2006–03 to all holders of operating licenses for nuclear power reactors, except those who have permanently ceased operation and have certified that fuel has been removed from the reactor vessel. The NRC is issuing this GL to:

(1) Request that addressees evaluate their facilities to confirm compliance with the existing applicable regulatory requirements in light of the information provided in this GL and, if appropriate, take additional actions. Specifically, although Hemyc and MT fire barriers in nuclear power plants (NPPs) may be relied on to protect electrical and instrumentation cables and equipment that provide safe shutdown capability during a fire, 2005 NRC testing has revealed that both materials failed to provide the protective function intended for compliance with existing regulations, for the configurations tested using the thermal acceptance criteria from the National Fire Protection Association (NFPA) Standard 251, ''Standard Methods of Fire Tests of Building Construction and Materials.'' The NRC staff applied the supplemental guidance in GL 86–10, Supplement 1, ''Fire Endurance Test Acceptance Criteria for Fire Barrier Systems Used to Separate Redundant Safe Shutdown Trains Within the Same Fire Area'' for

the test details of thermocouple number and location, and

(2) Require that addressees submit a written response to the NRC in accordance with NRC regulations in Title 10 of the Code of Federal Regulations Section 50.54(f).

This **Federal Register** notice is available through the NRC's Agencywide Documents Access and Management System (ADAMS) under Accession Number ML061080011.

DATES: The GL was issued on April 10, 2006.

ADDRESSEES: Not applicable.

FOR FURTHER INFORMATION, CONTACT: Daniel Frumkin at 301–415–2280 or by email *dxf1@nrc.gov* or Angie Lavretta at 301–415–3285 or email *axl3@nrc.gov.*

SUPPLEMENTARY INFORMATION: NRC Generic Letter 2006–03 may be examined, and/or copied for a fee, at the NRC's Public Document Room (PDR) at One White Flint North, 11555 Rockville Pike (first floor), Rockville, Maryland. Publicly available records will be accessible electronically from the ADAMS Public Electronic Reading Room on the Internet at the NRC Web site, *http://www.nrc.gov/NRC/ADAMS/index.html.* The ADAMS number for the GL is ML053620142.

If you do not have access to ADAMS or if you have problems in accessing the documents in ADAMS, contact the NRC Public Document Room reference staff at 1–800–397–4209 or 301–415–4737 or by e-mail to *pdr@nrc.gov.*

Dated at Rockville, Maryland, this 20th day of April 2006.

For the Nuclear Regulatory Commission.

Christopher I. Grimes,

Director, Division of Policy and Rulemaking, Office of Nuclear Reactor Regulation.

[FR Doc. E6–6342 Filed 4–26–06; 8:45 am]

BILLING CODE 7590–01–P

OFFICE OF MANAGEMENT AND BUDGET

Audits of States, Local Governments, and Non-Profit Organizations; Circular A–133 Compliance Supplement

AGENCY: Executive Office of the President, Office of Management and Budget.

ACTION: Notice of availability of the 2006 Circular A–133 Compliance Supplement.

SUMMARY: This notice announces the availability of the 2006 Circular A–133 Compliance Supplement. The notice also offered interested parties an opportunity to comment on the 2006 Circular A–133 Compliance Supplement. The 2006 Supplement adds three additional programs and one existing program added to existing cluster, deleted two programs, updates for program changes, and makes technical corrections. A list of changes to the 2006 Supplement can be found at Appendix V. Due to its length, the 2006 Supplement is not included in this Notice. See **ADDRESSES** for information about how to obtain a copy. This Notice also offers interested parties an opportunity to comment on the 2006 Supplement.

DATES: The 2006 Supplement will apply to audits of fiscal years beginning after June 30, 2005 and supersedes the 2004 Supplement and the 2005 Supplement update. All comments on the 2006 Supplement must be in writing and received by October 31, 2006. Late comments will be considered to the extent practicable.

Due to potential delays in OMB's receipt and processing of mail sent through the U.S. Postal Service, we encourage respondents to submit comments electronically to ensure timely receipt. We cannot guarantee that comments mailed will be received before the comment closing date.

Electronic mail comments may be submitted to: *Hai_M._Tran@omb.eop.gov.* Please include ''A–133 Compliance Supplement—2006'' in the subject line and the full body of your comments in the text of the electronic message and as an attachment. Please include your name, title, organization, postal address, telephone number, and E-mail address in the text of the message. Comments may also be submitted via facsimile to 202–395–3952.

Comments may be mailed to Gilbert Tran, Office of Federal Financial Management, Office of Management and Budget, Room 6025, New Executive Office Building, Washington, DC 20503.

ADDRESSES: Copies of the 2006 Supplement may be purchased at any Government Printing Office (GPO) bookstore (stock number: 041–001–00629–0). The main GPO bookstore is located at 710 North Capitol Street, NW., Washington, DC 20401, (202) 512–0132. A copy may also be obtained under the Grants Management heading from the OMB home page on the Internet which is located at *http://www.omb.gov* and then select ''Grants Management.''

FOR FURTHER INFORMATION CONTACT: Recipients should contact their cognizant or oversight agency for audit, or Federal awarding agency, as appropriate under the circumstances. Subrecipients should contact their pass-through entity. Federal agencies should contact Gilbert Tran, Office of Management and Budget, Office of Federal Financial Management, telephone (202) 395–3993.

SUPPLEMENTARY INFORMATION: The Office of Management and Budget (OMB) received two comment letters on the 2005 Supplement. The comment letters dealt with various technical issues and changes were made where appropriate.

Linda M. Combs,

Controller.

[FR Doc. E6–6330 Filed 4–26–06; 8:45 am]

BILLING CODE 3110–01–P

OFFICE OF MANAGEMENT AND BUDGET

2005 and 2006 List of Designated Federal Entities and Federal Entities

AGENCY: Office of Management and Budget.

ACTION: Notice.

SUMMARY: As required by the Inspector General Act of 1978, as amended (IG Act), this notice provides a list of Designated Federal Entities and Federal Entities.

FOR FURTHER INFORMATION CONTACT: Tawana Webb, Office of Federal Financial Management, Office of Management and Budget, telephone (202) 395–7586 (direct) or (202) 395–3993 (main office).

SUPPLEMENTARY INFORMATION: This notice provides a copy of the 2005 and 2006 Lists of Designated Federal Entities and Federal Entities which, under the IG Act, the Office of Management and Budget (OMB) is required to publish annually. This list is also posted on the OMB Web site at *http://www.whitehouse.gov/omb.*

The list is divided into two groups: Designated Federal Entities and Federal Entities. Designated Federal Entities are listed in the IG Act, except for those agencies that have ceased to exist or that have been deleted from the list. The Designated Federal Entities are required to establish and maintain Offices of Inspector General to: (1) Conduct and supervise audits and investigations relating to programs and operations; (2) promote economy, efficiency, and effectiveness of, and to prevent and detect fraud and abuse in such programs and operations; and (3) provide a means of keeping the entity head and the Congress fully and currently informed about problems and deficiencies relating to the administration of such programs and operations and the necessity for, and progress of, corrective actions.

Federal Entities are defined, in Section 8G(a)(1) of the Inspector General Act, as any Government corporation (within the meaning of section 103(1) of title 5, United States Code), any Government controlled corporation (within the meaning of section 103 (2) of such title), or any other entity in the Executive Branch of the government, or any independent regulatory agency, but does not include:

(1) An establishment (as defined in Section 11(2) of the Inspector General Act) or part of an establishment,

(2) a designated Federal entity (as defined in Section 8G(a)(2) of the Inspector General Act) or part of a designated Federal entity,

(3) the Executive Office of the President,

(4) the Central Intelligence Agency,

(5) the Government Accountability Office, or

(6) any entity in the judicial or legislative branches of the Government, including the Administrative Office of the United States Courts and the Architect of the Capitol and any activities under the direction of the Architect of the Capitol.

Federal Entities are required to report annually to each House of the Congress and OMB on audit and investigative activities in their organizations.

For the 2005 list, there were no additions or deletions to the Designated Federal Entities and Federal Entities list. For the 2006 list, there are no additions and one deletion to the Federal Entities list. The deletion is Farm Credit System Financial Assistance Corporation because in 2006 they will no longer receive funding.

The 2005 and 2006 Lists of Designated Federal Entities and Federal Entities was prepared in consultation with the U. S. Government Accountability Office.

Linda M. Combs,

Controller.

Herein follows the text of the 2005 and 2006 List of Designated Federal Entities and Federal Entities:

2005 List of Designated Federal Entities and Federal Entities

The Inspector General Act of 1978, as amended, requires OMB to publish a list of ''Designated Federal Entities'' and ''Federal Entities'' and the heads of such entities. Designated Federal Entities are required to establish Offices of Inspector General and to report semiannually to each House of the Congress and the Office of the Management and Budget summarizing the activities of the Office during the immediately preceding six-month periods ending March 31 and September 30. Federal Entities are required to report annually on October 31 to each House of the Congress and the Office of Management and Budget on audit and investigative activities in their organizations.

Designated Federal Entities and Entity Heads

1. Amtrak—Chairperson.
2. Appalachian Regional Commission—Federal Co-Chairperson.
3. The Board of Governors, Federal Reserve System—Chairperson.
4. Broadcasting Board of Governors—Chairperson.
5. Commodity Futures Trading Commission—Chairperson.
6. Consumer Product Safety Commission—Chairperson.
7. Corporation for Public Broadcasting—Board of Directors.
8. Denali Commission—Chairperson.
9. Election Assistance Commission—Chairperson.
10. Equal Employment Opportunity Commission—Chairperson.
11. Farm Credit Administration—Chairperson.
12. Federal Communications Commission—Chairperson.
13. Federal Election Commission—Chairperson.
14. Federal Housing Finance Board—Chairperson.
15. Federal Labor Relations Authority—Chairperson.
16. Federal Maritime Commission—Chairperson.
17. Federal Trade Commission—Chairperson.
18. Legal Services Corporation—Board of Directors.
19. National Archives and Records Administration—Archivist of the United States.
20. National Credit Union Administration—Chairperson.
21. National Endowment for the Arts—Chairperson.
22. National Endowment for the Humanities—Chairperson.
23. National Labor Relations Board—Chairperson.
24. National Science Foundation—National Science Board.
25. Peace Corps—Director.
26. Pension Benefit Guaranty Corporation—Chairperson.
27. Securities and Exchange Commission—Chairperson.
27. Smithsonian Institution—Secretary.
28. United States International Trade Commission—Chairperson.
29. United States Postal Service—Governors of the Postal Service.

Federal Entities and Entity Heads

1. Advisory Council on Historic Preservation—Chairperson.
2. African Development Foundation—Chairperson.
3. American Battle Monuments Commission—Chairperson.
4. Architectural and Transportation Barriers Compliance Board—Chairperson.
5. Armed Forces Retirement Home—Board of Directors.
6. Barry Goldwater Scholarship and Excellence in Education Foundation—Chairperson.
7. Chemical Safety and Hazard Investigation Board—Chairperson.
8. Christopher Columbus Fellowship Foundation—Chairperson.
9. Commission for the Preservation of America's Heritage Abroad—Chairperson.
10. Commission of Fine Arts—Chairperson.
11. Commission on Civil Rights—Chairperson.
12. Committee for Purchase from People Who Are Blind or Severely Disabled—Chairperson.
13. Court of Appeals for Veterans Claims—Chief Judge.
14. Court Services and Offender Supervision Agency for DC—Director.
15. Defense Nuclear Facilities Safety Board—Chairperson.
16. Delta Regional Authority—Federal Co-Chairperson.
17. Farm Credit System Financial Assistance Corporation—Chairperson.
18. Farm Credit System Insurance Corporation—Chairperson.
19. Federal Financial Institutions Examination Council—Chairperson.
20. Federal Mediation and Conciliation Service—Director.
21. Federal Mine Safety and Health Review Commission—Chairperson.
22. Federal Retirement Thrift Investment Board—Executive Director.
23. Harry S. Truman Scholarship Foundation—Chairperson.
24. Institute of American Indian and Alaska Native Culture and Arts Development—Chairperson.
25. Institute of Museum and Library Services—Director.
26. Inter-American Foundation—Chairperson.
27. James Madison Memorial Fellowship Foundation—Chairperson.
28. Japan-U.S. Friendship Commission—Chairperson.
29. Marine Mammal Commission—Chairperson.
30. Merit Systems Protection Board—Chairperson.
31. Millennium Challenge Corporation—Chief Executive Officer.
32. Morris K. Udall Scholarship and Excellence in National Environmental Policy Foundation—Chairperson.
33. National Capital Planning Commission—Chairperson.

34. National Commission on Libraries and Information Science—Chairperson.
35. National Council on Disability—Chairperson.
36. National Mediation Board—Chairperson.
37. National Transportation Safety Board—Chairperson.
38. National Veterans Business Development Corporation—Chairperson.
39. Neighborhood Reinvestment Corporation—Chairperson.
40. Nuclear Waste Technical Review Board—Chairperson.
41. Occupational Safety and Health Review Commission—Chairperson.
42. Office of Government Ethics—Director.
43. Office of Navajo and Hopi Indian Relocation—Chairperson.
44. Office of Special Counsel—Special Counsel.
45. Overseas Private Investment Corporation—Board of Directors.
46. Presidio Trust—Chairperson.
47. Selective Service System—Director.
48. Smithsonian Institution/John F. Kennedy Center for the Performing Arts—Chairperson.
49. Smithsonian Institution/National Gallery of Art—President.
50. Smithsonian Institution/Woodrow Wilson International Center for Scholars—Director.
51. Trade and Development Agency—Director.
52. U.S. Holocaust Memorial Museum—Chairperson.
53. U.S. Interagency Council on Homelessness—Chairperson.
54. U.S. Institute of Peace—Chairperson.
55. Vietnam Educational Foundation—Chairperson.
56. White House Commission on the National Moment of Remembrance—Chairperson.

2006 List of Designated Federal Entities and Federal Entities

Designated Federal Entities and Entity Heads

1. Amtrak—Chairperson.
2. Appalachian Regional Commission—Federal Co-Chairperson.
3. The Board of Governors, Federal Reserve System—Chairperson.
4. Broadcasting Board of Governors—Chairperson.
5. Commodity Futures Trading Commission—Chairperson.
6. Consumer Product Safety Commission—Chairperson.
7. Corporation for Public Broadcasting—Board of Directors.
8. Denali Commission—Chairperson.
9. Election Assistance Commission—Chairperson.
10. Equal Employment Opportunity Commission—Chairperson.
11. Farm Credit Administration—Chairperson.
12. Federal Communications Commission—Chairperson.
13. Federal Election Commission—Chairperson.
14. Federal Housing Finance Board—Chairperson.
15. Federal Labor Relations Authority—Chairperson.
16. Federal Maritime Commission—Chairperson.
17. Federal Trade Commission—Chairperson.
18. Legal Services Corporation—Board of Directors.
19. National Archives and Records Administration—Archivist of the United States.
20. National Credit Union Administration—Chairperson.
21. National Endowment for the Arts—Chairperson.
22. National Endowment for the Humanities—Chairperson.
23. National Labor Relations Board—Chairperson.
24. National Science Foundation—National Science Board.
25. Peace Corps—Director.
26. Pension Benefit Guaranty Corporation—Chairperson.
27. Securities and Exchange Commission—Chairperson.
27. Smithsonian Institution—Secretary.
28. United States International Trade Commission—Chairperson.
29. United States Postal Service—Governors of the Postal Service.

Federal Entities and Entity Heads

1. Advisory Council on Historic Preservation—Chairperson.
2. African Development Foundation—Chairperson.
3. American Battle Monuments Commission—Chairperson.
4. Architectural and Transportation Barriers Compliance Board—Chairperson.
5. Armed Forces Retirement Home—Board of Directors.
6. Barry Goldwater Scholarship and Excellence in Education Foundation—Chairperson.
7. Chemical Safety and Hazard Investigation Board—Chairperson.
8. Christopher Columbus Fellowship Foundation—Chairperson.
9. Commission for the Preservation of America's Heritage Abroad—Chairperson.
10. Commission of Fine Arts—Chairperson.
11. Commission on Civil Rights—Chairperson.
12. Committee for Purchase from People Who Are Blind or Severely Disabled—Chairperson.
13. Court of Appeals for Veterans Claims—Chief Judge.
14. Court Services and Offender Supervision Agency for DC—Director.
15. Defense Nuclear Facilities Safety Board—Chairperson.
16. Delta Regional Authority—Federal Co-Chairperson.
17. Farm Credit System Insurance Corporation—Chairperson.
18. Federal Financial Institutions Examination Council—Chairperson.
19. Federal Mediation and Conciliation Service—Director.
20. Federal Mine Safety and Health Review Commission—Chairperson.
21. Federal Retirement Thrift Investment Board—Executive Director.
22. Harry S. Truman Scholarship Foundation—Chairperson.
23. Institute of American Indian and Alaska Native Culture and Arts Development—Chairperson.
24. Institute of Museum and Library Services—Director.
25. Inter-American Foundation—Chairperson.
26. James Madison Memorial Fellowship Foundation—Chairperson.
27. Japan-U.S. Friendship Commission—Chairperson.
28. Marine Mammal Commission—Chairperson.
29. Merit Systems Protection Board—Chairperson.
30. Millennium Challenge Corporation—Chief Executive Officer.
31. Morris K. Udall Scholarship and Excellence in National Environmental Policy Foundation—Chairperson.
32. National Capital Planning Commission—Chairperson.
33. National Commission on Libraries and Information Science—Chairperson.
34. National Council on Disability—Chairperson.
35. National Mediation Board—Chairperson.
36. National Transportation Safety Board—Chairperson.
37. National Veterans Business Development Corporation—Chairperson.
38. Neighborhood Reinvestment Corporation—Chairperson.
39. Nuclear Waste Technical Review Board—Chairperson.
40. Occupational Safety and Health Review Commission—Chairperson.
41. Office of Government Ethics—Director.
42. Office of Navajo and Hopi Indian Relocation—Chairperson.
43. Office of Special Counsel—Special Counsel.

44. Overseas Private Investment Corporation—Board of Directors.
45. Presidio Trust—Chairperson.
46. Selective Service System—Director.
47. Smithsonian Institution/John F. Kennedy Center for the Performing Arts—Chairperson.
48. Smithsonian Institution/National Gallery of Art—President.
49. Smithsonian Institution/Woodrow Wilson International Center for Scholars—Director.
50. Trade and Development Agency—Director.
51. U.S. Holocaust Memorial Museum—Chairperson.
52. U.S. Interagency Council on Homelessness—Chairperson.
53. U.S. Institute of Peace—Chairperson.
54. Vietnam Educational Foundation—Chairperson.
55. White House Commission on the National Moment of Remembrance—Chairperson.

[FR Doc. E6–6329 Filed 4–26–06; 8:45 am]

BILLING CODE 3110–01–P

POSTAL RATE COMMISSION

Briefing on Declining Block Rate Model

AGENCY: Postal Rate Commission.

ACTION: Notice of briefing.

SUMMARY: Commission advisory staff will present a public briefing on a model for designing declining block rates in certain negotiated service agreements. The briefing will be held on May 5, 2006 beginning at 10 a.m. in the Commission's hearing room. It will be followed by a question-and-answer session. A Commission notice issued April 21, 2006 provides additional details, and is posted at *http://www.prc.gov.*

DATES: May 5, 2006.

ADDRESSES: Postal Rate Commission, 901 New York Ave., NW., Suite 200, Washington, DC 20268–0001.

FOR FURTHER INFORMATION CONTACT: Stephen L. Sharfman, General Counsel, 202–789–6820.

Dated: April 24, 2006.

Steven W. Williams,

Secretary.

[FR Doc. 06–3993 Filed 4–26–06; 8:45 am]

BILLING CODE 7710–FW–M

RAILROAD RETIREMENT BOARD

Sunshine Act; Notice of Public Hearing

Notice is hereby given that the Railroad Retirement Board, acting through its appointed Hearing Examiner, will hold a hearing on May 16, 2006, at 9 a.m., in Room 1524 in the Federal Building at 51 SW 1st Avenue, Miami, Florida 33130. The hearing will be held at the order of the Board for the purpose of taking evidence relating to the status of Herzog Transit Services, Inc., as an employer covered by the Railroad Retirement and Railroad Unemployment Insurance Acts.

The entire hearing will be open to the public. The person to contact for more information is Karl Blank, Hearing Examiner, phone number (312) 751–4941, TDD (312) 751–4701.

Dated: April 24, 2006.

Beatrice Ezerski,

Secretary to the Board.

[FR Doc. 06–4013 Filed 4–25–06; 11:27 am]

BILLING CODE 7905–01–M

SECURITIES AND EXCHANGE COMMISSION

[Release No. 34–53691, File No. 4–518]

Joint Industry Plan; Notice of Filing and Order Granting Temporary Effectiveness of Amendment To Plan Establishing Procedures Under Rule 605 of Regulation NMS

April 20, 2006.

Pursuant to section 11A(a)(3) of the Securities Exchange Act of 1934 (''Act'') [1] and Rule 608 of Regulation NMS,[2] notice is hereby given that on April 11, 2006, The Nasdaq Stock Market LLC (''Nasdaq'') submitted to the Securities and Exchange Commission (''SEC'' or ''Commission'') an amendment to the national market system plan that establishes procedures under Rule 605 of Regulation NMS (''Joint-SRO Plan'' or ''Plan'').[3] The amendment proposes to add Nasdaq as a participant to the Joint-SRO Plan. The Commission is publishing this notice and order to solicit comments from interested persons on the proposed Joint-SRO Plan amendment, and to grant temporary effectiveness to the proposed amendment through August 25, 2006.

[1] 15 U.S.C. 78k–1(a)(3).

[2] 17 CFR 242.608.

[3] 17 CFR 242.605. On April 12, 2001, the Commission approved a national market system plan for the purpose of establishing procedures for market centers to follow in making their monthly reports available to the public under Rule 11Ac1–5 under the Act (n/k/a Rule 605 of Regulation NMS). *See* Securities Exchange Act Release No. 44177 (April 12, 2001), 66 FR 19814 (April 17, 2001).

I. Description and Purpose of the Amendment

The current participants to the Joint-SRO Plan are the American Stock Exchange LLC, Boston Stock Exchange, Inc., Chicago Board Options Exchange, Inc., Chicago Stock Exchange, Inc., Cincinnati Stock Exchange, Inc. (n/k/a National Stock Exchange℠), National Association of Securities Dealers, Inc., New York Stock Exchange, Inc. (n/k/a New York Stock Exchange LLC), Pacific Exchange, Inc. (n/k/a NYSE Arca, Inc.), and Philadelphia Stock Exchange, Inc. The proposed amendment would add Nasdaq as a participant to the Joint-SRO Plan.

Nasdaq has submitted a signed copy of the Joint-SRO Plan to the Commission in accordance with the procedures set forth in the Plan regarding new participants. Section III(b) of the Joint-SRO Plan provides that a national securities exchange or national securities association may become a party to the Plan by: (i) Executing a copy of the Plan, as then in effect (with the only changes being the addition of the new participant's name in section 11(a) of the Plan and the new participant's single-digit code in section VI(a)(1) of the Plan) and (ii) submitting such executed plan to the Commission for approval.

II. Solicitation of Comments

Interested persons are invited to submit written data, views, and arguments concerning the foregoing, including whether the proposed Joint-SRO Plan amendment is consistent with the Act. Comments may be submitted by any of the following methods:

Electronic Comments

- Use the Commission's Internet comment form (*http://www.sec.gov/rules/sro/nms.shtml*); or
- Send an e-mail to *rule-comments@sec.gov.* Please include File Number 4–518 on the subject line.

Paper Comments

- Send paper comments in triplicate to Nancy M. Morris, Secretary, Securities and Exchange Commission, 100 F Street, NE., Washington, DC 20549–1090.

All submissions should refer to File Number 4–518. This file number should be included on the subject line if e-mail is used. To help the Commission process and review your comments more efficiently, please use only one method. The Commission will post all comments on the Commission's Internet Web site (*http://www.sec.gov/rules/sro/nms.shtml*). Copies of the submission, all subsequent amendments, all written

statements with respect to the proposed Joint-SRO Plan amendment that are filed with the Commission, and all written communications relating to the proposed Joint-SRO Plan amendment between the Commission and any person, other than those that may be withheld from the public in accordance with the provisions of 5 U.S.C. 552, will be available for inspection and copying in the Commission's Public Reference Room. Copies of the filing also will be available for inspection and copying at the principal office of Nasdaq. All comments received will be posted without change; the Commission does not edit personal identifying information from submissions. You should submit only information that you wish to make available publicly. All submissions should refer to File Number 4–518 and should be submitted on or before May 30, 2006.

III. Commission's Findings and Order Granting Accelerated Approval of Proposed Plan Amendment

The Commission finds that the proposed Joint-SRO Plan amendment is consistent with the requirements of the Act and the rules and regulations thereunder.[4] Specifically, the Commission believes that the proposed amendment, which permits Nasdaq to become a participant to the Joint-SRO Plan, is consistent with the requirements of Section 11A of the Act, and Rule 608 of Regulation NMS. The Plan establishes appropriate procedures for market centers to follow in making their monthly reports required pursuant to Rule 605 of Regulation NMS, available to the public in a uniform, readily accessible, and usable electronic format. The proposed amendment to include Nasdaq as a participant in the Joint-SRO Plan will contribute to the maintenance of fair and orderly markets and remove impediments to and perfect the mechanisms of a national market system by facilitating the uniform public disclosure of order execution information by all market centers.

The Commission finds good cause to grant temporary effectiveness to the proposed Joint-SRO Plan amendment, for 120 days, until August 25, 2006. The Commission believes that it is necessary and appropriate in the public interest, for the maintenance of fair and orderly markets, to remove impediments to, and perfect mechanisms of, a national market system to allow Nasdaq to become a participant in the Joint-SRO Plan. Nasdaq represents that it hopes to commence operations as a national securities exchange during the second quarter of 2006, and it must join the Plan as a condition of exchange registration. In addition, as a Plan participant, Nasdaq would have timely information on the Plan procedures as they are formulated and modified by the participants. The Commission finds, therefore, that granting temporary effectiveness of the proposed Joint-SRO Plan amendment is appropriate and consistent with section 11A of the Act.[5]

IV. Conclusion

It is therefore ordered, pursuant to section 11A of the Act[6] and Rule 608 of Regulation NMS,[7] that the proposed Joint-SRO Plan amendment is approved for 120 days, through August 25, 2006.

For the Commission, by the Division of Market Regulation, pursuant to delegated authority.[8]

J. Lynn Taylor,

Assistant Secretary.

[FR Doc. E6–6319 Filed 4–26–06; 8:45 am]

BILLING CODE 8010–01–P

[4] In approving this proposed Joint-SRO Plan amendment, the Commission has considered the proposal's impact on efficiency, competition, and capital formation. 15 U.S.C. 78c(f).

[5] 15 U.S.C. 78k–1.

[6] 15 U.S.C. 78k–1.

[7] 17 CFR 242.608.

[8] 17 CFR 200.30–3(a)(29).

SECURITIES AND EXCHANGE COMMISSION

[File No. 500–1]

In the Matter of Bullhide Corp.; Order of Suspension of Trading

April 25, 2006.

It appears to the Securities and Exchange Commission that there is a lack of current and accurate information concerning the securities of Bullhide Corp (a/k/a Bullhide Liner Corp.) because it has not filed a periodic report since the period ended December 31, 1999.

The Commission is of the opinion that the public interest and the protection of investors require a suspension of trading in the securities of the above-listed company.

Therefore, it is ordered, pursuant to Section 12(k) of the Securities Exchange Act of 1934, that trading in the above-listed company is suspended for the period from 9:30 a.m. EDT on April 25, 2006, through 11:59 p.m. EDT on May 8, 2006.

By the Commission.

Jill M. Peterson,

Assistant Secretary.

[FR Doc. 06–4009 Filed 4–25–06; 11:26 am]

BILLING CODE 8010–01–P

SECURITIES AND EXCHANGE COMMISSION

[File No. 500–1]

In the Matter of Skygivers, Inc.; Order of Suspension of Trading

April 25, 2006.

It appears to the Securities and Exchange Commission that there is a lack of current and accurate information concerning the securities of Skygivers, Inc. because it has not filed a periodic report since the period ended December 31, 2000.

The Commission is of the opinion that the public interest and the protection of investors require a suspension of trading in the securities of the above-listed company.

Therefore, it is ordered, pursuant to section 12(k) of the Securities Exchange Act of 1934, that trading in the above-listed company is suspended for the period from 9:30 a.m. EDT on April 25, 2006, through 11:59 p.m. EDT on May 8, 2006.

By the Commission.

Jill M. Peterson,

Assistant Secretary.

[FR Doc. 06–4010 Filed 4–25–06; 11:26 am]

BILLING CODE 8010–01–P

SECURITIES AND EXCHANGE COMMISSION

[Release No. 34–53686; File No. SR–CHX–2005–27]

Self-Regulatory Organizations; Chicago Stock Exchange, Inc.; Order Granting Approval of a Proposed Rule Change and Amendment Nos. 1, 2, and 3 To Amend Exchange Delisting Rules To Conform to Recent Amendments to Commission Rules Regarding Removal From Listing and Withdrawal From Registration

April 20, 2006.

I. Introduction

On October 17, 2005, the Chicago Stock Exchange, Inc. (''CHX'' or ''Exchange'') filed with the Securities and Exchange Commission (''SEC'' or ''Commission''), pursuant to section 19(b)(1) of the Securities Exchange Act of 1934 (''Act'')[1] and Rule 19b–4 thereunder,[2] a proposed rule change to amend Exchange delisting rules to conform to recent amendments to Commission rules regarding removal from listing and withdrawal from registration. On December 14, 2005,

[1] 15 U.S.C. 78s(b)(1).

[2] 17 CFR 240.19b–4.

CHX filed Amendment No. 1 to the proposed rule change.[3] On February 17, 2006, CHX filed Amendment No. 2 to the proposed rule change.[4] On March 15, 2006, CHX filed Amendment No. 3 to the proposal.[5] The proposed rule change, as amended, was published for comment in the **Federal Register** on March 21, 2006.[6] No comments were received regarding the proposal. This order approves the proposed rule change, as amended.

II. Description of the Proposed Rule Change

Section 12 of the Act[7] and Rule 12d2–2 thereunder[8] (''SEC Rule 12d2–2'') govern the process for the delisting and deregistration of securities listed on national securities exchanges. Recent amendments to SEC Rule 12d2–2 (''amended SEC Rule 12d2–2'') and other Commission rules require the electronic filing of revised Form 25 on the Commission's Electronic Data Gathering, Analysis, and Retrieval (''EDGAR'') system by exchanges and issuers for all delistings, other than delistings of standardized options and securities futures, which are exempted.[9]

In the case of exchange-initiated delistings, amended SEC Rule 12d2–2(b) states that a national securities exchange may file an application on Form 25 to strike a class of securities from listing and/or withdraw the registration of such securities, in accordance with its rules, if the rules of such exchange, at a minimum, provide for:[10]

(i) Notice to the issuer of the exchange's decision to delist its securities;

(ii) An opportunity for appeal to the exchange's board of directors, or to a committee designated by the board; and

(iii) Public notice of the national securities exchange's final determination to remove the security from listing and/or registration, by issuing a press release and posting notice on its Web site. Public notice must be disseminated no fewer than 10 days before the delisting becomes effective pursuant to amended SEC Rule 12d2–2(d)(1), and must remain posted on its Web site until the delisting is effective.

The Exchange proposes to amend the text of its Article XXVIII, Rule 4 relating to the delisting of securities to comply with the requirements of recently amended SEC Rule 12d2–2. With respect to the above requirements set forth in amended SEC Rule 12d2–2(b), CHX Article XXVIII, Rule 4 currently provides the requisite issuer notice as well as an opportunity for appeal to a committee designated by the Board. As required under amended SEC Rule 12d2–2(b)(1), CHX proposes to state in CHX Article XXVIII, Rule 4(f) that when a final determination is made with respect to the delisting of one or more securities of an issuer, the Exchange's Secretary promptly would provide public notice of that determination by issuing a press release and posting notice on the Exchange's Web site. This notice would be disseminated no fewer than 10 days before the delisting becomes effective and would remain posted on the Exchange's Web site until the delisting is effective. The proposed rule change also states that the Exchange will file Form 25 with the Commission and provide a copy to the issuer.

In the case of an issuer-initiated delisting, CHX Article XXVIII, Rule 4 currently requires that in the absence of special circumstances, a security would not be removed from listing and/or registration upon application of the issuer, unless the issuer files with the Exchange a certified copy of a resolution adopted by the board of directors of the issuer authorizing withdrawal from listing and registration. This provision would be retained in the CHX's amended Rule. CHX's proposal would add a new requirement that the issuer must file a copy of Form 25 with the Exchange immediately after filing the Form 25 with the Commission.

In addition, CHX proposes revisions to CHX Article XXVIII, Rule 4(b) that would set forth, in general terms, the process that should be followed pursuant to amended SEC Rule 12d2–2 when an issuer seeks to voluntarily withdraw the listing or registration of a security on the Exchange. In such instances, CHX proposes to require the issuer to:

(i) Comply with the Exchange's rules for delisting and applicable state laws;

(ii) Submit written notice to the Exchange, no fewer than ten days before filing a Form 25, of its intent to withdraw its security; and

(iii) Issue public notice of its intent to withdraw from listing and registration; and

(iv) File Form 25 with the Commission.

CHX also proposes that an issuer seeking to voluntarily apply to withdraw a class of securities from listing on the Exchange that has received notice from the Exchange that it is below the Exchange's continued listing policies and standards, or that is aware that it is below such continued listing policies and standards notwithstanding that it has not received such notice from the Exchange, must disclose that it is no longer eligible for continued listing (including the specific continued listing policies and standards that the issue is below) in: (i) Its written notice of its determination to withdraw from listing required by amended SEC Rule 12d2–2(c)(2)(ii) and; (ii) its public press release and Web site notice required by amended SEC Rule 12d2–2(c)(2)(iii).

Finally, the proposal makes other non-substantive changes (such as inserting headings and making the text part of the rule itself, rather than an interpretation to the rule) that are designed to make the rule easier to read.

III. Discussion

The Commission finds that the proposed rule change is consistent with the requirements of the Act and the rules and regulations thereunder applicable to a national securities exchange[11] and, in particular, the requirements of section 6 of the Act.[12] Specifically, as discussed below, the Commission finds that the proposal is consistent with section 6(b)(5) of the

[3] In Amendment No. 1, CHX made several changes to the proposed rule text of CHX Article XXVIII, Rule 4 to clarify the organization of the Rule; incorporate the requirement that issuers provide notice to the Exchange upon filing a Form 25; and clarify the effective dates for the old and the new CHX Rule 4.

[4] In Amendment No. 2, CHX included new language to the proposed rule text of CHX Article XXVIII, Rule 4 relating to the timing of certain issuer obligations under amended SEC Rule 12d2–2 and made other grammatical corrections to the proposed rule text.

[5] In Amendment No. 3, CHX included new language to the proposed rule text of CHX Article XXVIII, Rule 4 stating that if an issuer seeks to voluntarily withdraw its securities from listing and has either received notice from the Exchange that it is below the Exchange's continued listing policies and standards, or is aware that it is below such continued listing policies and standards even if it has not received such notice from the Exchange, the issuer must disclose that it is no longer eligible for continued listing (including the specific continued listing policies and standards that the issue is below) in: (i) Its written notice to the Exchange of its determination to withdraw from listing required by amended Rule 12d2–2(c)(2)(ii) under the Act; and (ii) its public press release and website notice required by amended Rule 12d2–2(c)(2)(iii) under the Act.

[6] *See* Securities Exchange Act Release No. 53493 (March 16, 2006), 71 FR 14265.

[7] 15 U.S.C. 78l.

[8] 17 CFR 240.12d2–2.

[9] *See* Securities Exchange Act Release No. 52029 (July 14, 2005), 70 FR 42456 (July 22, 2005).

[10] *See also* Form 8–K (Item 3.01. Notice of Delisting or Failure to Satisfy a Continued Listing Rule or Standard; Transfer of Listing), which sets forth disclosure requirements for issuers that do not satisfy listing standards.

[11] In approving this proposal, the Commission has considered the proposed rule's impact on efficiency, competition, and capital formation. *See* 15 U.S.C. 78c(f).

[12] 15 U.S.C. 78f.

Act,[13] which requires, in part, that the rules of an exchange be designed to prevent fraudulent and manipulative acts and practices, to promote just and equitable principles of trade, to foster cooperation and coordination with persons engaged in regulating, clearing, settling, and processing information with respect to, and facilitating transactions in securities, to remove impediments to and perfect the mechanism of a free and open market and a national market system, and, in general, to protect investors and the public interest. Further, as noted in more detail below, the changes being adopted by CHX meet the requirements of amended SEC Rule 12d2–2.

A. Exchange Delisting

Amended SEC Rule 12d2–2(b) states that a national securities exchange may file an application on Form 25 to strike a class of securities from listing and/or withdraw the registration of such securities, in accordance with its rules, if the rules of such exchange, at a minimum, provide for notice to the issuer of the exchange's decision to delist, opportunity for appeal, and public notice of the exchange's final determination to delist. The Commission believes that CHX's current rules and proposal comply with the dictates of amended SEC Rule 12d2–2(b).

CHX Article XXVIII, Rule 4 currently provides the requisite issuer notice as well as an opportunity for appeal to a committee designated by the Board. Specifically, issuers may appeal the Hearing Examiner's delisting determinations to the Board's Executive Committee.[14] In addition, the proposed rule change will provide for public notice of the Exchange's final determination to remove the security from listing and/or registration. This should ensure that investors have adequate notice of an exchange delisting and is consistent with the protection of investors under section 6(b)(5) of the Act.[15]

B. Issuer Voluntary Delisting

In the case of an issuer-initiated delisting, CHX proposes revisions to CHX Article XXVIII, Rule 4(b) that would set forth, in general terms, the process that should be followed when an issuer seeks to voluntarily withdraw the listing or registration of a security on the Exchange, including the issuer's obligation to file Form 25 with the Commission (and to submit it to the Exchange) and the Exchange's obligation to provide public notice of an issuer's voluntary request to delist securities. In the case of an issuer-initiated delisting, CHX proposes to require the issuer to:

(i) Comply with the Exchange's rules for delisting and applicable state laws;

(ii) Submit written notice to the Exchange, no fewer than ten days before filing a Form 25, of its intent to withdraw its security; and

(iii) Issue public notice of its intent to withdraw from listing and registration; and

(iv) File Form 25 with the Commission.

The Commission believes that the amendments will fully inform issuers of the requirements for voluntary delisting of their securities under CHX rules and federal securities laws.

The proposal also sets forth a new requirement not in amended SEC Rule 12d2–2 that would require the issuer to file a copy of Form 25 with the Exchange immediately after filing Form 25 with the Commission. This requirement will allow the Exchange to be fully informed of the actual filing of a Form 25 and be prepared to take timely action to delist the security in accordance with the filing of the Form.

CHX also proposes that an issuer seeking to voluntarily apply to withdraw a class of securities from listing on the Exchange that has received notice from the Exchange that it is below the Exchange's continued listing policies and standards, or that is aware that it is below such continued listing policies and standards notwithstanding that it has not received such notice from the Exchange, must disclose that it is no longer eligible for continued listing (including the specific continued listing policies and standards that the issue is below) in: (i) Its statement of all material facts relating to the reasons for withdrawal from listing provided to the Exchange along with written notice of its determination to withdraw from listing required by amended SEC Rule 12d2–2(c)(2)(ii) and; (ii) its public press release and Web site notice required by amended SEC Rule 12d2–2(c)(2)(iii). The Commission believes that this requirement will allow shareholders to be informed and aware that the issuer has failed to meet Exchange listing standards and is voluntarily delisting. Issuers will therefore not be permitted to delist voluntarily without public disclosure of their noncompliance with Exchange listing standards.

IV. Conclusion

It is therefore ordered, pursuant to section 19(b)(2) of the Act,[16] that the proposed rule change (File No. SR–CHX–2005–27), as amended, is approved.

For the Commission, by the Division of Market Regulation, pursuant to delegated authority.[17]

J. Lynn Taylor,

Assistant Secretary.

[FR Doc. E6–6318 Filed 4–26–06; 8:45 am]

BILLING CODE 8010–01–P

[13] 15 U.S.C. 78f(b)(5).

[14] *See* CHX Article XXVIII, Article 4.

[15] 15 U.S.C. 78f(b)(5).

[16] *Id.*

[17] 17 CFR 200.30–3(a)(12).

SECURITIES AND EXCHANGE COMMISSION

[Release No. 34–53687; File No. SR–NASD–2006–015]

Self-Regulatory Organizations; National Association of Securities Dealers, Inc.; Order Approving Proposed Rule Change To Establish the Nasdaq Halt Cross

April 20, 2006.

On January 31, 2006, the National Association of Securities Dealers, Inc. (''NASD''), through its subsidiary, The Nasdaq Stock Market, Inc. (''Nasdaq''), filed with the Securities and Exchange Commission (''Commission'') a proposed rule change pursuant to section 19(b)(1) of the Securities Exchange Act of 1934 (''Act'')[1] and Rule 19b–4 thereunder,[2] to establish the Nasdaq Halt Cross. On February 16, 2006, Nasdaq filed Amendment No. 1 to the proposed rule change. On March 6, 2006, Nasdaq filed Amendment No. 2 to the proposed rule change. The proposed rule change, as amended by Amendment Nos. 1 and 2, was published for comment in the **Federal Register** on March 21, 2006.[3] The Commission received no comments on the proposal. On April 17, 2006, Nasdaq filed Amendment No. 3 to the proposed rule change to make NASD Rule 4703(b)(2)(B) parallel to NASD Rule 4703(a)(2)(B).[4] This order approves the proposed rule change, as amended.

The Commission finds that the proposed rule change is consistent with the requirements of the Act and the rules and regulations thereunder applicable to a national securities

[1] 15 U.S.C. 78s(b)(1).

[2] 17 CFR 240.19b–4.

[3] *See* Securities Exchange Act Release No. 53488 (March 15, 2006), 71 FR 14272.

[4] Amendment No. 3 was a technical amendment and therefore not subject to notice and comment.

association,[5] the requirements of section 15A of the Act,[6] in general, and section 15A(b)(6) of the Act,[7] in particular, which requires, among other things, that the rules of a national securities association be designed to facilitate transactions in securities and to remove impediments to and perfect the mechanism of a free and open market. The Commission believes that the proposed rule change, as amended, should provide useful information to market participants and increase transparency and order interaction at the opening after a trading halt. In addition, the Commission believes that the proposed rule change, as amended, should result in the public dissemination of information that more accurately reflects the trading in a particular security at the open after a trading halt. The Commission notes that the Halt Cross is based on the Nasdaq opening cross, which the Commission approved in a prior filing.[8]

It is therefore ordered, pursuant to section 19(b)(2) of the Act,[9] that the proposed rule change (SR–NASD–2006–015), as amended, be, and it hereby is, approved.

For the Commission, by the Division of Market Regulation, pursuant to delegated authority.[10]

J. Lynn Taylor,

Assistant Secretary.

[FR Doc. E6–6317 Filed 4–26–06; 8:45 am]

BILLING CODE 8010–01–P

[5] In approving the proposed rule change, the Commission has considered its impact on efficiency, competition, and capital formation. 15 U.S.C. 78c(f).

[6] 15 U.S.C. 78*o*–3.

[7] 15 U.S.C. 78*o*–3(b)(6).

[8] *See* Securities Exchange Act Release No. 50405 (September 16, 2004), 69 FR 57118 (September 23, 2004).

[9] 15 U.S.C. 78s(b)(2).

[10] 17 CFR 200.30–3(a)(12).

SECURITIES AND EXCHANGE COMMISSION

[Release No. 34–53685; File No. SR–NYSE–2005–72]

Self-Regulatory Organizations; New York Stock Exchange, Inc. (n/k/a New York Stock Exchange LLC); Order Granting Approval of a Proposed Rule Change and Amendment No. 1 Thereto and Notice of Filing and Order Granting Accelerated Approval of Amendment No. 2 Thereto To Amend Exchange Delisting Rules To Conform to Recent Amendments to Commission Rules Regarding Removal From Listing and Withdrawal From Registration

April 20, 2006.

I. Introduction

On October 20, 2005, the New York Stock Exchange, Inc. (n/k/a New York Stock Exchange LLC) (''NYSE'' or ''Exchange'') filed with the Securities and Exchange Commission (''SEC'' or ''Commission''), pursuant to section 19(b)(1) of the Securities Exchange Act of 1934 (''Act'')[1] and Rule 19b–4 thereunder,[2] a proposed rule change to amend Exchange delisting rules to conform to recent amendments to Commission rules regarding removal from listing and withdrawal from registration. On December 22, 2005, NYSE filed Amendment No. 1 to the proposed rule change.[3] The proposed rule change, as amended, was published for comment in the **Federal Register** on March 13, 2006.[4] No comments were received regarding the proposal. On April 11, 2006, the Exchange filed Amendment No. 2 to the proposed rule change.[5] This order approves the proposed rule change, as amended, publishes notice of Amendment No. 2 to the proposed rule change, and grants accelerated approval to Amendment No. 2.

[1] 15 U.S.C. 78s(b)(1).

[2] 17 CFR 240.19b–4.

[3] In Amendment No. 1, the Exchange made clarifying changes to Item 3 of the Exchange's Form 19b–4 and to Exhibit 1.

[4] *See* Securities Exchange Act Release No. 53398 (March 2, 2006), 71 FR 12738.

[5] In Amendment No. 2, the Exchange made typographical changes to the proposed rule text of Section 806.02 (Removal from List Upon Request of Company) of the NYSE Listed Company Manual that were intended to clarify that the Exchange's proposed new requirement that a company provide a copy of the Form 25 to the Exchange simultaneously with the filing of such Form 25 with the Commission is a new requirement and is not part of the requirements of Rule 12d2–2(c) under the Act.

II. Description of the Proposed Rule Change

Section 12 of the Act[6] and Rule 12d2–2 thereunder[7] (''SEC Rule 12d2–2'') govern the process for the delisting and deregistration of securities listed on national securities exchanges. Recent amendments to SEC Rule 12d2–2 (''amended SEC Rule 12d2–2'') and other Commission rules require the electronic filing of revised Form 25 on the Commission's Electronic Data Gathering, Analysis, and Retrieval (''EDGAR'') system by exchanges and issuers for all delistings, other than delistings of standardized options and securities futures, which are exempted.[8]

In the case of exchange-initiated delistings, amended SEC Rule 12d2–2(b) states that a national securities exchange may file an application on Form 25 to strike a class of securities from listing and/or withdraw the registration of such securities, in accordance with its rules, if the rules of such exchange, at a minimum, provide for:[9]

(i) Notice to the issuer of the exchange's decision to delist its securities;

(ii) An opportunity for appeal to the exchange's board of directors, or to a committee designated by the board; and

(iii) Public notice of the national securities exchange's final determination to remove the security from listing and/or registration, by issuing a press release and posting notice on its Web site. Public notice must be disseminated no fewer than 10 days before the delisting becomes effective pursuant to amended SEC Rule 12d2–2(d)(1), and must remain posted on its Web site until the delisting is effective.

The Exchange proposes to amend sections 804.00 and 806.02 of the Exchange's Listed Company Manual. With respect to the above requirements set forth in amended SEC Rule 12d2–2(b), NYSE rules currently provide the requisite issuer notice as well as an opportunity for appeal to a committee designated by the Board.[10] NYSE rules do not currently provide for the mandated public notice, and accordingly the Exchange is proposing changes to section 804.00 of the NYSE Listed Company Manual to provide that

[6] 15 U.S.C. 78l.

[7] 17 CFR 240.12d2–2.

[8] *See* Securities Exchange Act Release No. 52029 (July 14, 2005), 70 FR 42456 (July 22, 2005).

[9] *See also* Form 8–K (Item 3.01. Notice of Delisting or Failure to Satisfy a Continued Listing Rule or Standard; Transfer of Listing), which sets forth disclosure requirements for issuers that do not satisfy listing standards.

[10] *See* section 804.00 (Procedure for Delisting) of the NYSE Listed Company Manual.

prior to filing the Form 25 with the Commission to withdraw a security from listing and registration, the Exchange will give public notice of its final determination to delist the security by issuing a press release and posting a notice on its Web site. Such notice would remain posted on the Exchange's Web site until the delisting is effective.

In the case of an issuer-initiated delisting, the NYSE is retaining section 806.02 of the NYSE Listed Company Manual that currently provides that an issuer may delist a security after its board approves the action and the issuer furnishes the Exchange with a copy of the board resolution authorizing such delisting certified by the secretary of the issuer. The Exchange's proposal would clarify that the issuer must comply with all of the requirements of amended SEC Rule 12d2–2(c) and thereafter file a Form 25 with the Commission to withdraw its security from listing and registration. The Exchange's proposal would also add a new requirement that the issuer must file a copy of Form 25 with the Exchange immediately after submitting the Form 25 with the Commission.

In addition to the proposed changes to comply with amended SEC Rule 12d2–2, the Exchange proposes to amend section 804.00 to delete references therein to ''public Directors'' and ''industry Directors,'' as these terms relate to a historical governance structure of the Exchange that no longer exists.

III. Discussion

The Commission finds that the proposed rule change is consistent with the requirements of the Act and the rules and regulations thereunder applicable to a national securities exchange [11] and, in particular, the requirements of section 6 of the Act.[12] Specifically, as discussed below, the Commission finds that the proposal is consistent with section 6(b)(5) of the Act,[13] which requires, in part, that the rules of an exchange be designed to prevent fraudulent and manipulative acts and practices, to promote just and equitable principles of trade, to foster cooperation and coordination with persons engaged in regulating, clearing, settling, and processing information with respect to, and facilitating transactions in securities, to remove impediments to and perfect the mechanism of a free and open market and a national market system, and, in general, to protect investors and the public interest. Further, as noted in more detail below, the changes being adopted by the Exchange meet the requirements of amended SEC Rule 12d2–2.

A. Exchange Delisting

Amended SEC Rule 12d2–2(b) states that a national securities exchange may file an application on Form 25 to strike a class of securities from listing and/or withdraw the registration of such securities, in accordance with its rules, if the rules of such exchange, at a minimum, provide for notice to the issuer of the exchange's decision to delist, opportunity for appeal, and public notice of the exchange's final determination to delist. The Commission believes that the Exchange's current rules and proposal comply with the dictates of amended SEC Rule 12d2–2(b).

NYSE rules currently provide for the requisite issuer notice as well as an opportunity for appeal to a committee designated by the Board. Specifically, if the Exchange staff should determine to delist a security, it will notify the issuer in writing of the basis of its determination. Such notice will inform the issuer that the issuer may appeal staff delisting determinations to a committee of the Board of Directors of the Exchange.[14] In addition, the proposed rule change will provide for public notice of the Exchange's final determination to remove the security from listing and/or registration. This should ensure that investors have adequate notice of an exchange delisting and is consistent with the protection of investors under section 6(b)(5) of the Act.[15]

B. Issuer Voluntary Delisting

In the case of an issuer-initiated delisting, section 806.02 of the NYSE Listed Company Manual currently provides that an issuer may delist a security after its board approves the action and the issuer furnishes the Exchange with a copy of the board resolution authorizing such delisting certified by the secretary of the issuer. The Exchange's proposal would clarify that the issuer must comply with all of the requirements of amended SEC Rule 12d2–2(c) and thereafter file a Form 25 with the Commission to withdraw its security from listing and registration. The Commission believes that the amendments will fully inform issuers of the requirements for voluntary delisting of their securities under NYSE rules and federal securities laws.

The proposal also sets forth a new requirement not in amended SEC Rule 12d2–2 that would require the issuer to notify the Exchange that it has filed Form 25 with the Commission contemporaneously with such filing. This requirement will allow the Exchange to be fully informed of the actual filing of a Form 25 and be prepared to take timely action to delist the security in accordance with the filing of the Form.[16]

C. Accelerated Approval of Amendment No. 2

Pursuant to section 19(b)(2) of the Act,[17] the Commission may not approve any proposed rule change, or amendment thereto, prior to the 30th day after the date of publication of notice of the filing thereof, unless the Commission finds good cause for so doing and publishes its reasons for so finding. The Commission hereby finds good cause for approving Amendment No. 2 to the proposal, prior to the 30th day after publishing notice of Amendment No. 2 in the **Federal Register**. The revisions made to the proposal in Amendment No. 2 are typographical changes clarifying that the Exchange's proposed requirement that a company provide a copy of the Form 25 to the Exchange simultaneously with the filing of such Form with the Commission is a new requirement and is not part of the requirements of amended SEC Rule 12d2–2(c). This was the intent of the provision as originally proposed. The Commission believes that accelerating Amendment No. 2 is appropriate because these revisions are clarifying and do not raise new regulatory issues. Accordingly, pursuant to Section

[11] In approving this proposal, the Commission has considered the proposed rule's impact on efficiency, competition, and capital formation. *See* 15 U.S.C. 78c(f).

[12] 15 U.S.C. 78f.

[13] 15 U.S.C. 78f(b)(5).

[14] *See* Section 804.00 of the NYSE Listed Company Manual.

[15] 15 U.S.C. 78f(b)(5).

[16] The Commission notes that current section 807.00 of the NYSE Listed Company Manual, which the Exchange is retaining in its rules, provides in part that where a company falls below continued listing standards, the Exchange will permit the company to voluntarily transfer its listing. During this transition, the Exchange will daily disseminate ticker and information notices identifying the security's status and will include similar information on the Exchange's Web site.

In addition, amended SEC Rule 12d2–2(c)(2)(iii) requires a company seeking voluntary delisting to publish notice of its intention, along with its reasons for delisting, via a press release and Web site. In such cases, the Commission expects that a company below Exchange continued listing standards, in complying with amended SEC Rule 12d2–2(c)(2)(iii), would disclose in its public notice that it has fallen below continued listing standards, including the specific listing policies and standards which it does not comply with, and is voluntarily delisting from the Exchange.

[17] 15 U.S.C. 78s(b)(2).

19(b)(2) of the Act,[18] the Commission finds good cause to approve Amendment No. 2 prior to the thirtieth day after notice of the Amendment is published in the **Federal Register**.

IV. Solicitation of Comments

Interested persons are invited to submit written data, views, and arguments concerning Amendment No. 2, including whether Amendment No. 2 is consistent with the Act. Comments may be submitted by any of the following methods:

Electronic Comments

- Use the Commission's Internet comment form (*http://www.sec.gov/rules/sro.shtml*); or
- Send an e-mail to *rule-comments@sec.gov.* Please include File No. SR–NYSE–2005–72 on the subject line.

Paper Comments

- Send paper comments in triplicate to Nancy M. Morris, Secretary, Securities and Exchange Commission, Station Place, 100 F Street, NE., Washington, DC 20549–1090.

All submissions should refer to File Number SR–NYSE–2005–72. This file number should be included on the subject line if e-mail is used. To help the Commission process and review your comments more efficiently, please use only one method. The Commission will post all comments on the Commission's Internet Web site (*http://www.sec.gov/rules/sro.shtml*). Copies of the submission, all subsequent amendments, all written statements with respect to the proposed rule change that are filed with the Commission, and all written communications relating to the proposed rule change between the Commission and any person, other than those that may be withheld from the public in accordance with the provisions of 5 U.S.C. 552, will be available for inspection and copying in the Commission's Public Reference Room. Copies of such filing also will be available for inspection and copying at the principal office of the Exchange. All comments received will be posted without change; the Commission does not edit personal identifying information from submissions. You should submit only information that you wish to make available publicly. All submissions should refer to File Number SR–NYSE–2005–72 and should be submitted on or before May 18, 2006.

[18] *Id.*

V. Conclusion

It is therefore ordered, pursuant to section 19(b)(2) of the Act,[19] that the proposed rule change (File No. SR–NYSE–2005–72), as amended, is approved, and Amendment No. 2 to the proposed rule change is hereby granted accelerated approval.

For the Commission, by the Division of Market Regulation, pursuant to delegated authority.[20]

J. Lynn Taylor,

Assistant Secretary.

[FR Doc. E6–6320 Filed 4–26–06; 8:45 am]

BILLING CODE 8010–01–P

[19] *Id.*

[20] 17 CFR 200.30–3(a)(12).

SECURITIES AND EXCHANGE COMMISSION

[Release No. 34–53689; File No. SR–NYSE–2005–60]

Self-Regulatory Organizations; New York Stock Exchange, Inc. (n/k/a New York Stock Exchange LLC); Notice of Filing of Proposed Rule Change and Amendment No. 2 Thereto Relating to Proposed New Rules 342.24 (''Annual Branch Office Inspection'') and 342.25 (''Risk-Based Surveillance and Branch Office Identification'') to Permit Member Organizations to Classify Appropriate Branch Offices for Cyclical Inspections and Proposed New Rule 342.26 (''Criteria for Inspection Programs'')

April 20, 2006.

Pursuant to section 19(b)(1) of the Securities Exchange Act of 1934 (''Act''),[1] and Rule 19b–4 thereunder,[2] notice is hereby given that on August 15, 2005, the New York Stock Exchange, Inc.[3] (n/k/a New York Stock Exchange LLC) (''Exchange'') filed with the Securities and Exchange Commission (''SEC'' or ''Commission'') the proposed rule change as described in Items I, II, and III below, which Items have been prepared by the Exchange. The Exchange filed Amendment No. 2 to the proposed rule change on April 7, 2006.[4] The Commission is publishing this notice to solicit comments on the proposed rule change, as amended, from interested persons.

[1] 15 U.S.C. 78s(b)(1).

[2] 17 CFR 240.19b–4.

[3] The Exchange is now known as the New York Stock Exchange LLC. See Securities Exchange Act Release No. 53382 (February 27, 2006), 71 FR 11251 (March 6, 2006).

[4] *See* Amendment No. 2.

The Exchange filed Amendment No. 1 to the proposed rule change on October 31, 2005 and subsequently withdrew Amendment No. 1 on April 7, 2006.

I. Self-Regulatory Organization's Statement of the Terms of Substance of the Proposed Rule Change

The Exchange is filing with the Commission proposed new Exchange Rules 342.24 (''Annual Branch Office Inspection'') and 342.25 (''Risk-Based Surveillance and Branch Office Identification'') to permit organizations to classify appropriate branch offices for cyclical inspections and 342.26 (''Criteria for Inspection Programs''). The text of the proposed rule change is available on the Exchange's Web site (*http://www.nyse.com*), at the Exchange's Office of the Secretary, and at the Commission's Public Reference Room.

II. Self-Regulatory Organization's Statement of the Purpose of, and Statutory Basis for, the Proposed Rule Change

In its filing with the Commission, the Exchange included statements concerning the purpose of, and basis for, the proposed rule change and discussed any comments it received on the proposed rule change. The text of these statements may be examined at the places specified in Item IV below. The Exchange has prepared summaries, set forth in sections A, B, and C below, of the most significant aspects of such statements.

A. Self-Regulatory Organization's Statement of the Purpose of, and Statutory Basis for, the Proposed Rule Change

1. Purpose

The proposed amendments would permit member organizations, with the written approval of the Exchange, to exempt certain branch offices from the general annual branch office inspection requirement of Exchange Rule 342 (''Offices—Approval, Supervision and Control'') by utilizing an Exchange-approved risk-based surveillance system.[5] In addition, the proposed amendments would re-position a portion of Exchange Rule 342's Interpretation into the rule text.

The purpose of the proposed amendments is to provide member organizations the flexibility to reduce

[5] Pursuant to discussions with Exchange staff, the Commission made clarifying changes to the purpose section of the proposed rule change. Telephone conversations between Stephen Kasprzak, Principal Counsel, Rule and Interpretative Standards, Exchange, and Cyndi N. Rodriguez, Special Counsel, and Kate Robbins, Attorney, Division of Market Regulation (''Division''), Commission, on April 18, 2006.

unnecessary inspections of low-risk branch offices with good compliance records and to more fully concentrate surveillance and compliance resources on those branch offices that would most likely benefit from more frequent or more thorough on-site inspections. This would be accomplished through the ongoing monitoring of prescribed branch office criteria that would serve as effective indicators to distinguish those offices that warrant annual inspection from those that might not. Further, use of the prescribed criteria would enable member organizations to more effectively direct attention to those regulatory risk areas most likely in need of closer scrutiny during the course of an on-site inspection. The proposed amendments would require that every branch office, without exception, be inspected at least once every three calendar years.

Background

Exchange Rule 342 and its Interpretation currently require that branch office inspections be conducted at least annually by member organizations, unless it has been demonstrated to the satisfaction of the Exchange that because of proximity, special reporting or supervisory practice, other arrangements may satisfy the Rule's requirements.[6] Under this Interpretation, exemptions from the general annual inspection requirement have been determined on case-by-case basis, one branch office at a time. Recent years have brought to the securities industry an increase in the number of smaller, so-called ''limited purpose offices,''[7] as well as many life-style changes (such as increasing use of home offices). These business/demographic changes, coupled with advances in the use of surveillance technology, strongly suggest that it may be no longer practicable or necessary that all branch offices warrant on-site annual inspections.

The provision, noted above, allowing for a case-by-case exemption from the annual inspection requirement is being retained. However, in order to provide a more uniform standard to determine such exemptions, and in recognition of available surveillance capabilities, proposed Exchange Rule 342.24 would permit member organizations to submit to the Exchange, for approval, policies and procedures outlining the use of a risk-based surveillance system that the firm would utilize to identify branch offices requiring less frequent than annual inspections. The proposed amendments would require that all branch offices, without exception, be inspected at least once every three calendar years.

Policies and Procedures

Under the proposed amendments, a member organization seeking an exemption from the standard annual inspection requirement would be required to submit to the Exchange policies and procedures that reflect their business models and product mix. In addition to the incorporation of prescribed criteria to identify branch offices eligible for exemption from an annual inspection cycle (discussed in detail below), proposed Exchange Rule 342.25 would outline the policy and procedure requirements that member organizations would be required to include in any risk-based surveillance system acceptable to the Exchange pursuant to the proposed amendments. Specifically, such policies and procedures would be required to provide, at a minimum, for: (1) Flexibility to initiate ''for-cause'' inspections, when circumstances warrant, of any branch office that has been exempted from the standard annual inspection cycle; (2) inspection on an unannounced basis of no less than half of the branch offices inspected each year; and (3) a system to allow employees to report compliance issues on a confidential basis outside of the branch office chain of command.

The Exchange believes that establishment of these policy and procedure requirements would engender an environment conducive to effective supervision and oversight by member organizations of both branch offices subject to an annual inspection cycle as well as those exempted from the standard cycle. For instance, the requirement that ''for-cause'' inspections be conducted when warranted makes clear that branch offices that have been deemed exempt from the standard annual inspection cycle are not exempt from ongoing surveillance and supervision.[8] Further, if the profile of an exempted office subsequently changes (with respect to the size or scope of its business activities or significant changes in other risk-based criteria), the firm could reconsider the exemption. In instances where a firm rescinds an exemption from annual branch office inspection due to regulatory ''red flags'' (*e.g.*, registered representatives under special supervision, receipt of multiple customer complaints, etc.), the rescission should remain in effect until the factors or conditions that prompted it have been thoroughly resolved.

The use of unannounced branch office inspections is an effective means of enhancing the integrity of the annual inspection process in that it encourages branch office personnel to properly view regulatory compliance as an ongoing, day-to-day process.[9]

The ability of employees located in branch offices to report compliance issues on a confidential basis outside of the branch office chain of command should foster an atmosphere conducive to reporting issues of regulatory concern that may arise at the branch level, but might not be reflected in the prescribed risk criteria. Knowledge of such compliance issues would further assist firm personnel in making ''for-cause'' branch office inspection determinations.

Prescribed Criteria

Certain prescribed criteria, applied to each branch office, would be required of any acceptable risk-based surveillance system used to determine which branch offices could be exempted from annual inspection. The criteria, selected after extensive review by Exchange staff and consultation with industry representatives, are effective indicators to distinguish those offices that warrant annual inspection from those that might not. Further, their inclusion directs attention to the risks that most need to be addressed via on-site inspection. The risk-based factors to be considered should include, but not necessarily be limited to, the following:

(1) Number of registered representatives;

(2) A significant increase in the number of registered representatives;

(3) Number of customers and volume of transactions;

(4) A significant increase in branch office revenues;

(5) Incidence of concentrated securities positions in customers' accounts;

(6) Aggregate customer assets held;

(7) Nature of the business conducted and the sales practice risk to investors associated with the products sold, and product mix (*e.g.*, options, equities, mutual funds, annuities, etc.);

(8) Numbers of accounts serviced on a discretionary basis;

(9) Compliance and regulatory history of the branch, including:

[6] Interpretation Handbook Rule 342(a),(b)/03 (''Annual Branch Office Inspection'').

[7] *See* Securities Exchange Act Release No. 52640 (October 19, 2005), 70 FR 61672 (October 25, 2005) (SR–NYSE–2004–51).

[8] *But see also* section 15(b)(4)(E) of the Act, 15 U.S.C. 78*o*(b)(4)(E).

[9] The Division's Staff Legal Bulletin No. 17 (Remote Office Supervision) noted that unannounced inspections may form part of an effective supervisory system.

(a) Registered representatives subject to special supervision by the member organization, self-regulatory authorities, state regulatory authorities or the SEC in years other than the previous or current year;

(b) Complaints, arbitrations, internal discipline, or prior inspection findings; and

(c) Persons subject to recent disciplinary actions by self-regulatory authorities, state regulatory authorities or the SEC.

(10) Operational factors, such as the number of errors and account designation changes per registered representative;

(11) Incidence of accommodation mailing addresses (*e.g.*, post office boxes and ''care of'' accounts);

(12) Whether the branch office permits checks to be picked up by customers or hand delivery of checks to customers;

(13) Experience, function (producing or non-producing) and compensation structure of branch office manager;

(14) Branch offices recently opened or acquired; and

(15) Changes in branch location, status or management personnel.

The size of the office (as represented by the number of registered representatives, the number of customers, the volume of transactions and the aggregate customer assets held), as well as any significant increase in the number of registered representatives or revenues, are quantitative considerations that a firm should carefully assess before granting an exemption from the annual inspection. Either individually or in aggregate, these factors could indicate that the office's activity is so extensive that, as a matter of good practice, it should be inspected annually, even in the absence of any disciplinary or operational ''red flags.'' In fact, as discussed below, certain quantitative thresholds would, in and of themselves, disqualify offices from an annual inspection exemption.

The incidence of concentrated securities positions in customers' accounts is included since highly concentrated positions, particularly in securities not recommended by the firm, could be indicative of unsuitable or highly leveraged activity. The nature of the business conducted and the sales practice risk to investors associated with the products sold and product mix of the branch office would be factors to consider, as would the prevalence of certain types of investment strategies. For example, a high level of low-priced equities (*e.g.*, penny stocks) might be indicative of potential sales practices problems. The numbers of accounts serviced on a discretionary basis would be a factor given the heightened potential for abuse (*e.g.*, churning or excessive trading) in such accounts.

As with all risk-based criteria, the factors noted above should not be viewed strictly in quantitative terms but should also be subjected to qualitative analysis when determining whether to exempt a branch from the annual inspection requirement. For example, while a branch office's increase in revenue may simply be attributable to an increase in the number of registered representatives it employs, it may also be attributable to increased sales volume from existing customers of registered representatives, which could be indicative of an inappropriately aggressive sales effort.

Also to be considered when conducting a branch office risk analysis is the compliance and regulatory history of the branch office. Such factors include:

(1) Registered representatives subject to special supervision [10] by the member organization, self-regulatory authorities, state regulatory authorities or the SEC in years other than the previous or current year;

(2) Complaints, arbitrations, internal discipline, or prior inspection findings; and

(3) Persons subject to recent disciplinary actions by self-regulatory authorities, state regulatory authorities or the SEC.

In analyzing the compliance and regulatory history of branch offices, firms should, among other things, review the previous 12 months for investigations by any self-regulatory organization or the SEC, customer complaints or complaint summaries, arbitrations and lawsuits closed or pending, Form RE–3 filings submitted to the Exchange pursuant to Exchange Rule 351(a), and internal investigation reports filed pursuant to Exchange Rule 351(e).[11]

It is expected that the review and analysis of recent branch office regulatory history would have a considerable effect on exemption determinations. For example, a significant disciplinary action at a given branch office location would strongly suggest against a firm granting an exception from an annual branch office inspection. Moreover, an overall increase in the number of disciplinary actions firm-wide should require the firm to review its overall inspection cycle, particularly regarding inspections on less than an annual basis.

As discussed further below, in instances where a branch office has one or more registered representatives subject to special supervision, it should subject that branch office to the annual inspection until such time as the registered representatives are no longer subject to such supervision. In instances where the conduct of a particular registered representative or that of the office generally has been egregious, the firm should take immediate and appropriate action and consider administering on-site inspections on a more frequent than annual basis.

In addition, the proposed amendments prescribe certain key operational factors to be considered when making determinations regarding the frequency of branch office inspections. Specific indicators include:

(1) The number of errors and account designation changes per registered representative (which can be indicative of unauthorized trading);

(2) The presence of ''accommodation'' mailing addresses (*e.g.*, post office boxes and ''care of'' accounts), which can be indicative of a registered representative directing confirms, statements, and other account-related materials to other than the customer; and

(3) Whether the branch office permits checks to be picked up by customers or hand delivers checks to customers (a practice that could facilitate misappropriation practices).

These criteria reflect the focus of recent amendments to Exchange Rule 342 that subject certain sensitive regulatory functions to internal control procedures in order to address potential lapses in supervision at member organizations.[12] The referenced operational functions have been included due to their notable misuse, both by registered representatives and branch office managers (BOMs), to the disadvantage of customers. Accordingly, consistent with the general supervision requirements of Exchange Rule 342, a firm should carefully review such criteria, quantitatively and qualitatively, before granting an exemption from an annual inspection.

The prescribed criteria further include indicia relative to the BOM, such as his

[10] Indicia of special or heightened supervision include, but are not limited to, limitation on the types of products (*e.g.*, low price or small cap) a broker is permitted to sell, restrictions or elimination in a broker's discretion, restricting the broker to soliciting only firm recommendations, and approval of all or certain transactions prior to execution.

[11] *See* Exchange Information Memo No. 06–6, dated February 17, 2006. *See also* note 5, supra.

[12] *See* Exchange Information Memo 04–38, dated July 26, 2004. *See also* Securities Exchange Act Release No. 49882 (June 17, 2004), 69 FR 35108 (June 23, 2004) (SR–NYSE–2002–36).

or her experience (whether it is sufficient for the nature and volume of business required to be supervised), whether or not the BOM services customer accounts (which could take time away or otherwise detract from supervisory duties), and the BOM's compensation structure (*e.g.*, whether he or she receives a substantial override from registered representatives' revenue that could lead to a conflict of interest) or whether the BOM's compensation is determined in part by the branch's compliance record.

Finally, the proposed amendments require member organizations to consider potential problems associated with branch offices that have been recently opened or acquired, as well as changes in branch office location, status or management personnel. Where firms have acquired branch offices through merger or acquisition, and where such branch offices have had regulatory problems, firms should consider initially subjecting such offices to annual inspections absent compelling reasons to the contrary. Moreover changes in personnel (*e.g.*, the resignation or termination of a BOM) may warrant more diligent review before exempting such branch office from the annual inspection cycle.

Branch Offices Not Eligible for Exemption

Certain branch offices—given their size, the scope of supervisory activities, or other factors—would not be deemed appropriate for an exemption under the proposed amendments. For instance, offices exercising supervision over other branch offices, those with 25 or more registered individuals, and offices in the top 20% of production or customer assets at the member organization would not be eligible for exemption from the annual inspection requirement, nor would any branch office with a registered representative subject to special supervision in the current or immediately preceding year. Further, the proposed amendments require that every branch office, without exception, be inspected at least once every three calendar years.

Repositioning of Interpretation Text

The proposed amendments would delete current Interpretation 342(a), (b)/03 in its entirety. However, the Interpretation text is largely being repositioned into the Rule itself. For instance, the proposed amendments retain: (1) The ability of a member organization to request, on an office-by-office basis, an alternate arrangement to an annual inspection; (2) the requirement that branch office inspections be carried out by a person independent of the branch office in question (*i.e.*, not the Branch Office Manager, or any person who directly or indirectly reports to such Manager, or any person to whom such Manager directly reports); and (3) the requirement that internal controls over certain prescribed areas be subject to independent testing and verification.[13] The amendments would also require that written reports reflecting the results of the inspections must be maintained for the longer of three years or until the next branch inspection.[14]

2. Statutory Basis

The Exchange believes that the proposed rule change is consistent with the provisions of section 6(b)(5) under the Act[15] because it is designed to prevent fraudulent and manipulative acts and practices, to promote just and equitable principles of trade, to foster cooperation and coordination with persons engaged in regulating, clearing, settling, processing information with respect to, and facilitating transactions in securities, to remove impediments to and perfect the mechanism of a free and open market and a national market system, and, in general, to protect investors and the public interest. The Exchange believes that the proposed rule change is consistent with the Section in that it should enable member organizations to better allocate and focus their regulatory resources on their branches requiring annual inspections.

B. Self-Regulatory Organization's Statement on Burden on Competition

The Exchange believes that the proposed rule change will not impose any burden on competition not necessary or appropriate in furtherance of the purposes of the Act.

C. Self-Regulatory Organization's Statement on Comments on the Proposed Rule Change Received From Members, Participants, or Others

Comments were neither solicited nor received.

III. Date of Effectiveness of the Proposed Rule Change and Timing for Commission Action

Within 35 days of the date of publication of this notice in the **Federal Register** or within such longer period (i) as the Commission may designate up to 90 days of such date if it finds such longer period to be appropriate and publishes its reasons for so finding or (ii) as to which the Exchange consents, the Commission will:

(A) By order approve such proposed rule change, as amended; or

(B) Institute proceedings to determine whether the proposed rule change, as amended, should be disapproved.

IV. Solicitation of Comments

Interested persons are invited to submit written data, views and arguments concerning the foregoing, including whether the proposed rule change, as amended, is consistent with the Act. Comments may be submitted by any of the following methods:

Electronic Comments

- Use the Commission's Internet comment form (*http://www.sec.gov/rules/sro.shtml*); or
- Send an e-mail to *rule-comments@sec.gov.* Please include File Number SR–NYSE–2005–60 on the subject line.

Paper Comments

- Send paper comments in triplicate to Nancy M. Morris, Secretary, Securities and Exchange Commission, 100 F Street, NE., Washington, DC 20549–1090.

All submissions should refer to File Number SR–NYSE–2005–60. This file number should be included on the subject line if e-mail is used. To help the Commission process and review your comments more efficiently, please use only one method. The Commission will post all comments on the Commission's Internet Web site (*http://www.sec.gov/rules/sro.shtml*). Copies of the submission, all subsequent amendments, all written statements with respect to the proposed rule change that are filed with the Commission, and all written communications relating to the proposed rule change between the Commission and any person, other than those that may be withheld from the public in accordance with the provisions of 5 U.S.C. 552, will be available for inspection and copying in the Commission's Public Reference Room. Copies of such filing also will be available for inspection and copying at the principal office of the Exchange. All comments received will be posted without change; the Commission does not edit personal identifying information from submissions. You should submit only information that you wish to make available publicly. All submissions should refer to File Number SR–NYSE–2005–60 and should be submitted on or before May 18, 2006.

[13] *See* proposed Exchange Rule 342.26.

[14] *See* proposed Exchange Rule 342.24.

[15] 15 U.S.C. 78f(b)(5).

For the Commission, by the Division of Market Regulation, pursuant to delegated authority.[16]

J. Lynn Taylor,

Assistant Secretary.

[FR Doc. E6–6321 Filed 4–26–06; 8:45 am]

BILLING CODE 8010–01–P

SECURITIES AND EXCHANGE COMMISSION

[Release No. 34–53688; File No. SR–Phlx–2006–24]

Self-Regulatory Organizations; Philadelphia Stock Exchange, Inc.; Notice of Filing and Immediate Effectiveness of Proposed Rule Change and Amendment No. 1 Thereto Relating to Fees Associated With Participation in the Web Central Registration Depository

April 20, 2006.

Pursuant to Section 19(b)(1) of the Securities Exchange Act of 1934 (''Act'')[1] and Rule 19b–4 thereunder,[2] notice is hereby given that on April 7, 2006, the Philadelphia Stock Exchange, Inc. (''Phlx'' or ''Exchange'') filed with the Securities and Exchange Commission (''Commission'') the proposed rule change as described in Items I, II and III below, which Items have been prepared by the Phlx. On April 18, 2006, the Phlx filed Amendment No. 1 to the proposed rule change.[3] The Phlx has designated this proposal as one establishing or changing a due, fee, or other charge imposed by the Phlx under Section 19(b)(3)(A)(ii) of the Act,[4] and Rule 19b–4(f)(2) thereunder,[5] which renders the proposal effective upon filing with the Commission. The Commission is publishing this notice to solicit comments on the proposed rule change, as amended, from interested persons.

I. Self-Regulatory Organization's Statement of the Terms of Substance of the Proposed Rule Change

The Phlx proposes to: (1) Adopt fees associated with the implementation of an electronic registration process through the National Association of Securities Dealers, Inc. (''NASD'') Web Central Registration Depository (''Web CRD'');[6] and (2) amend the Exchange's fee schedule to reflect various changes to Registered Representative Registration fees in connection with the implementation of Web CRD.

Specifically, the Exchange proposes to adopt the following NASD fees that will be imposed in connection with participation in Web CRD: (a) An NASD CRD Processing Fee of $85.00; (b) an NASD Disclosure Processing Fee of $95.00; (c) an NASD Annual System Processing Fee of $30.00; and (d) fingerprinting fees which vary depending on the submission: for a first card submission the fee will be $35.00; for a second card submission the fee will be $13.00; for a third card submission the fee will be $35.00; and for processing fingerprint results where the member had prints processed through a self-regulatory organization and not the NASD, the fee will be $13.00. The NASD will process the fingerprint cards and will make the results available to the Exchange, its members, and member and participant organizations via Web CRD.

The Exchange is also proposing to assess its fees that are currently referred to on the Exchange's fee schedule as Registered Representative Registration[7] fees to certain Exchange members designated on Form U4, Uniform Application for Securities Industry Registration or Transfer, as Member Exchange[8] and to Off-Floor Traders.[9] Therefore, the initial fee of $55.00, the renewal fee of $55.00 annually, the transfer fee of $55.00 and the termination fee of $30.00 will be assessed on Registered Representatives, Member Exchange and Off-Floor Traders.[10]

In connection with the above-referenced fees, the Exchange is proposing to make minor, technical changes to Appendix A of its fee schedule for purposes of clarity. The Examinations Fee is being relocated on Appendix A of the fee schedule to group this fee with similar fees and the categories of Member Exchange and Off-Floor Traders are being added to the currently named Registered Representative Registration fee.

The text of the proposed rule change is available on the Phlx's Web site (*http://www.phlx.com*), at the Phlx's Office of the Secretary, and at the Commission's Public Reference Room.

II. Self-Regulatory Organization's Statement of the Purpose of, and Statutory Basis for, the Proposed Rule Change

In its filing with the Commission, the Phlx included statements concerning the purpose of and basis for the proposed rule change and discussed any comments it received on the proposed rule change. The text of these statements may be examined at the places specified in Item IV below. The Phlx has prepared summaries, set forth in Sections A, B, and C below, of the most significant aspects of such statements.

A. Self-Regulatory Organization's Statement of the Purpose of, and Statutory Basis for, the Proposed Rule Change

1. Purpose

The purpose of the proposed rule change is to adopt fees associated with the implementation of an electronic registration process through NASD's Web CRD,[11] which should, in turn,

[16] 17 CFR 200.30–3(a)(12).

[1] 15 U.S.C. 78s(b)(1).

[2] 17 CFR 240.19b–4.

[3] In Amendment No. 1, the Exchange made clarifying changes to the proposal, including the rule text. The effective date of the original proposed rule change is April 7, 2006, and the effective date of the amendment is April 18, 2006. For purposes of calculating the 60-day period within which the Commission may summarily abrogate the proposed rule change, as amended, under Section 19(b)(3)(C) of the Act, the Commission considers the period to commence on April 18, 2006, the date on which the Exchange submitted Amendment No. 1. *See* 15 U.S.C. 78s(b)(3)(C).

[4] 15 U.S.C. 78s(b)(3)(A)(ii).

[5] 17 CFR 240.19b–4(f)(2).

[6] The Exchange notified the members regarding the migration to Web CRD on February 21, 2006, March 7, 2006, March 27, 2006 and April 10, 2006.

[7] Registered Representative categories include registered options principals, general securities representatives, general securities sales supervisors and United Kingdom limited general securities registered representatives but do not include ''off-floor'' traders, as defined in Phlx Rule 604(e). *See also* Exchange Rule 604(a) and (d).

[8] The Member Exchange category refers to Exchange permit holders.

[9] Every person who is compensated directly or indirectly by a member or participant organization for which the Exchange is the Designated Examining Authority or any other associated person of such member or participant organization, and who executes, makes trading decisions with respect to, or otherwise engages in proprietary or agency trading of securities, including, but not limited to, equities, preferred securities, convertible debt securities or options off the floor of the Exchange (''Off-Floor Traders''), must successfully complete the Uniform Registered Representative Examination Series 7. *See* Exchange Rule 604.

[10] The $55.00 initial registration fee and annual renewal fee are charged once per registered individual and are not charged per individual registration category. For example, if a person works for a member organization and requests to be registered as an ME and a Series 7 general securities registered representative, the NASD will collect only one Phlx initial registration fee of $55.00. Further, a person registered in multiple categories with a single member organization will be charged a single Phlx annual $55.00 renewal fee and not $55.00 per registration category.

[11] The Commission has approved a proposed rule change filed by the Exchange to use the NASD's Web CRD system as the mechanism for submitting required Forms U4, Uniform Application for Securities Industry Registration or Transfer, and Forms U5, Uniform Termination Notice for Securities Industry Registration. The period from April 10, 2006 to May 11, 2006 has been designated as a phase-in period, which will permit manual filing in case there is a problem with filing via Web CRD. On May 12, 2006, the use of Web CRD will become mandatory. *See* Securities Exchange Act Release No. 53612 (April 6, 2006), 71 FR 18798 (April 12, 2006) (SR–Phlx–2006–15).

create a more efficient registration process by migrating from a manual paper-based Exchange procedure for registration to a web-based registration process that is operated by the NASD. The proposed fees are similar to those fees charged by other Self-Regulatory Organizations that use NASD's Web CRD.[12]

The purpose of adopting the Member Exchange and Off-Floor Trader fees is to help offset the Exchange's increased costs relating to its regulatory oversight and enforcement programs.

Members and member and participant organizations will be instructed to pay the NASD fees associated with Web CRD as well as any Registered Representative/Member Exchange/Off-Floor Trader Registration fees directly to the NASD through Web CRD. NASD will retain the NASD fees and remit the Registered Representative/Member Exchange/Off-Floor Trader Registration fees it collects to Phlx.

Finally, additional modifications are being made to the fee schedule to group similar fees together for ease of reference.

2. Statutory Basis

The Exchange believes that its proposal to amend its schedule of fees is consistent with Section 6(b) of the Act[13] in general, and furthers the objectives of Section 6(b)(4) of the Act[14] in particular, in that it is an equitable allocation of reasonable fees among Exchange members.

B. Self-Regulatory Organization's Statement on Burden on Competition

The Exchange does not believe that the proposed rule change will impose any burden on competition that is not necessary or appropriate in furtherance of the purposes of the Act.

C. Self-Regulatory Organization's Statement on Comments on the Proposed Rule Change Received From Members, Participants, or Others

No written comments were either solicited or received.

III. Date of Effectiveness of the Proposed Rule Change and Timing for Commission Action

Because the foregoing rule change establishes or changes a due, fee, or other charge imposed by the Exchange, it has become effective pursuant to Section 19(b)(3)(A)(ii) of the Act[15] and paragraph (f)(2) of Rule 19b–4 thereunder.[16]

At any time within 60 days of the filing of the proposed rule change, the Commission may summarily abrogate such rule change if it appears to the Commission that such action is necessary or appropriate in the public interest, for the protection of investors, or otherwise in furtherance of the purposes of the Act.[17]

IV. Solicitation of Comments

Interested persons are invited to submit written data, views, and arguments concerning the foregoing, including whether the proposed rule change, as amended, is consistent with the Act. Comments may be submitted by any of the following methods:

Electronic Comments

- Use the Commission's Internet comment form (*http://www.sec.gov/rules/sro.shtml*); or
- Send an e-mail to *rule-comments@sec.gov.* Please include File Number SR–Phlx–2006–24 on the subject line.

Paper Comments

- Send paper comments in triplicate to Nancy M. Morris, Secretary, Securities and Exchange Commission, 100 F Street, NE., Washington, DC 20549–1090.

All submissions should refer to File Number SR–Phlx–2006–24. This file number should be included on the subject line if e-mail is used. To help the Commission process and review your comments more efficiently, please use only one method. The Commission will post all comments on the Commission's Internet Web site (*http://www.sec.gov/rules/sro.shtml*). Copies of the submission, all subsequent amendments, all written statements with respect to the proposed rule change that are filed with the Commission, and all written communications relating to the proposed rule change between the Commission and any person, other than those that may be withheld from the public in accordance with the provisions of 5 U.S.C. 552, will be available for inspection and copying in the Commission's Public Reference Room. Copies of such filing also will be available for inspection and copying at the principal office of the Phlx. All comments received will be posted without change; the Commission does not edit personal identifying information from submissions. You should submit only information that you wish to make available publicly. All submissions should refer to File Number SR–Phlx–2006–24 and should be submitted on or before May 18, 2006.

For the Commission, by the Division of Market Regulation, pursuant to delegated authority.[18]

J. Lynn Taylor,

Assistant Secretary.

[FR Doc. E6–6322 Filed 4–26–06; 8:45 am]

BILLING CODE 8010–01–P

[12] *See* Securities Exchange Act Release Nos. 51641 (May 2, 2005), 70 FR 24155 (May 6, 2005) (SR–PCX–2005–49); 48066 (June 19, 2003), 68 FR 38409 (June 27, 2003) (SR–AMEX–2003–49); and 45112 (November 28, 2001), 66 FR 63086 (December 4, 2001) (SR–NYSE–2001–47).

[13] 15 U.S.C. 78f(b).

[14] 15 U.S.C. 78f(b)(4).

[15] 15 U.S.C. 78s(b)(3)(A)(ii).

[16] 17 CFR 240.19b–4(f)(2).

[17] *See supra* note 3.

[18] 17 CFR 200.30–3(a)(12).

SECURITIES AND EXCHANGE COMMISSION

[Release No. 34–53692; File No. SR-Phlx-2005–62]

Self-Regulatory Organizations; Philadelphia Stock Exchange, Inc.; Order Granting Accelerated Approval of Proposed Rule Change and Amendment No. 1 Thereto and Notice of Filing and Order Granting Accelerated Approval to Amendment Nos. 2 and 3 to the Proposed Rule Change Relating to Amending Exchange Delisting Rules To Conform to Recent Amendments to Commission Rules Regarding Removal From Listing and Withdrawal From Registrations

April 20, 2006.

I. Introduction

On October 25, 2005, the Philadelphia Stock Exchange, Inc. (''Phlx'' or ''Exchange'') filed with the Securities and Exchange Commission (''SEC'' or ''Commission''), pursuant to Section 19(b)(1) of the Securities Exchange Act of 1934 (''Act'') [1] and Rule 19b–4 thereunder,[2] a proposed rule change to amend Exchange delisting rules to conform to recent amendments to Commission rules regarding removal from listing and withdrawal from registration. On January 4, 2006, Phlx filed Amendment No. 1 to the proposed rule change.[3] The proposed rule change, as amended, was published for comment in the **Federal Register** on

[1] 15 U.S.C. 78s(b)(1).

[2] 17 CFR 240.19b–4.

[3] In Amendment No. 1, Phlx amended its rule text and the purpose section of the Exchange's Form 19b–4 to clarify the effective date of the proposed rule change and revised Phlx Rule 809 to state that an issuer proposing to withdraw a security from listing on the Exchange must provide a copy of Form 25 to the Exchange upon filing with the Commission.

March 23, 2006.[4] On March 31, 2006, Phlx filed Amendment No. 2 to the proposed rule change.[5] On April 12, 2006, Phlx filed Amendment No. 3 to the proposed rule change.[6] No comments were received regarding the proposal. This order approves the proposed rule change, as amended, on an accelerated basis, publishes notice of Amendment Nos. 2 and 3 to the proposed rule change, and grants accelerated approval to Amendment Nos. 2 and 3.

II. Description of the Proposed Rule Change

Section 12 of the Act[7] and Rule 12d2–2 thereunder[8] (''SEC Rule 12d2–2'') govern the process for the delisting and deregistration of securities listed on national securities exchanges. Recent amendments to SEC Rule 12d2–2 (''amended SEC Rule 12d2–2'') and other Commission rules require the electronic filing of revised Form 25[9] on the Commission's Electronic Data Gathering, Analysis, and Retrieval (''EDGAR'') system by exchanges and issuers for all delistings, other than delistings of standardized options and securities futures, which are exempted.[10]

In the case of exchange-initiated delistings, amended SEC Rule 12d2–2(b) states that a national securities exchange may file an application on Form 25 to strike a class of securities from listing and/or withdraw the registration of such securities, in accordance with its rules, if the rules of such exchange, at a minimum, provide for:

(i) Notice to the issuer of the exchange's decision to delist its securities;

(ii) An opportunity for appeal to the exchange's board of directors, or to a committee designated by the board; and

(iii) Public notice of the national securities exchange's final determination to remove the security from listing and/or registration, by issuing a press release and posting notice on its Web site. Public notice must be disseminated no fewer than 10 days before the delisting becomes effective pursuant to amended SEC Rule 12d2–2(d)(1), and must remain posted on its Web site until the delisting is effective.

Phlx Rule 811 (Delisting Policies and Procedures) establishes the procedures for the Exchange to delist a company that is below the Exchange's continued listing criteria. The Exchange proposes to revise Phlx Rule 811 to incorporate the new requirements set forth in amended SEC Rule 12d2–2(b). The provisions set forth in current Phlx Rule 811, which provide for notification to the issuer in the event that the Exchange determines to delist the issuer's securities and the right to appeal the Exchange's determination, satisfy the minimum provisions set forth in amended SEC Rule 12d2–2(b)(1)(i)–(ii). Phlx rules do not currently provide for the mandated public notice, and accordingly, amended Phlx Rule 811(g) would require the Exchange to provide public notice of its final determination to remove a security from listing and/or registration, pursuant to SEC Rule 12d2–2(b)(1)(iii). In addition, proposed Commentary to Phlx Rule 810 would require the Exchange to deliver a copy of the Form 25 promptly to the issuer, pursuant to amended SEC Rule 12d2–2(b)(2).

With respect to issuer voluntary delisting procedures, the Exchange proposes to amend Phlx Rule 811 to require an issuer seeking to voluntarily delist from the Exchange to submit Form 25 to the Commission in compliance with the requirements of amended SEC Rule 12d2–2(c). In addition, the issuer would be required to provide a copy of the Form 25 to the Exchange simultaneously with the filing of the Form with the Commission.

In addition, Phlx proposes to amend Phlx Rule 809(c) to clarify that not less than ten days before the issuer submits Form 25 an issuer seeking to voluntarily apply to withdraw a security from listing on the Exchange where the issuer has received notice from the Exchange, pursuant to Phlx Rule 811 or otherwise, that the issuer is below the Exchange's continued listing policies and standards, or that the issuer is aware that it is below such continued listing policies and standards notwithstanding that it has not received such notice from the Exchange, must:

(i) Provide written notice to the Exchange of its decision to withdraw from listing indicating all material facts relating to the reasons for withdraw in compliance with amended SEC Rule 312d2–2(c); and

(ii) Contemporaneously with providing such notice to the Exchange disclose that it is no longer eligible for continued listing (including the specific continued listing policies and standards that the issue is below) in (A) its statement of all material facts relating to the reasons for withdrawal from listing provided to the Exchange along with written notice of its determination to withdraw from listing required by amended SEC Rule 12d2–2(c)(2)(ii), and (B) its release and Web site notice required by amended SEC Rule 12d2–2(c)(2)(iii).[11]

Finally, the Exchange has proposed changes in its rules to clarify that the Form 25 serves as the application to remove a security from listing and/or registration and to specify that the proposed changes will be effective as of April 24, 2006 as required by amended SEC Rule 12d2–2.

III. Commission's Findings and Order Granting Accelerated Approval of Proposed Rule Change and Amendment Nos. 1, 2, and 3

The Commission finds that the proposed rule change, as amended, is consistent with the requirements of the Act and the rules and regulations thereunder applicable to a national securities exchange[12] and, in particular, the requirements of Section 6 of the Act.[13] Specifically, as discussed below, the Commission finds that the proposal, as amended, is consistent with Section 6(b)(5) of the Act,[14] which requires, in part, that the rules of an exchange be designed to prevent fraudulent and manipulative acts and practices, to promote just and equitable principles of trade, to foster cooperation and coordination with persons engaged in regulating, clearing, settling, and processing information with respect to, and facilitating transactions in securities, to remove impediments to and perfect the mechanism of a free and open market and a national market system, and, in general, to protect investors and the public interest. Further, as noted in more detail below, the changes being adopted by Phlx meet the requirements of amended SEC Rule 12d2–2.

[4] *See* Securities Exchange Act Release No. 53496 (March 16, 2006), 71 FR 14769.

[5] In Amendment No. 2, Phlx amended its rule text to a clarify that an issuer that is below the continued listing policies and standards of the Exchange and seeks to voluntarily apply to withdraw a class of securities from listing must disclose that it is no longer eligible for continued listing in its statement of material facts relating to the reason for withdrawal from listing, its public press release, and its Web site notice.

[6] In Amendment No. 3, the Exchange revised Phlx Rule 811 to clarify that an issuer that is below the continued listing policies and stadards of the Exchange and considering delisting may file a delistign application pursuant to the procedures outlined in amended Phlx Rule 809(b)–(c).

[7] 15 U.S.C. 78*l*.

[8] 17 CFR 240.12d2–2.

[9] 17 CFR 249.25.

[10] *See* Securities Exchange Act Release No. 52029 (July 14, 2005), 70 FR 42456 (July 22, 2005) (''SEC Rule 12d2–2 Approval Order'').

[11] *See* Amendment No. 2, *supra* note 5.

[12] In approving this proposal, the Commission has considered the proposed rule's impact on efficiency, competition, and capital formation. *See* 15 U.S.C. 78c(f).

[13] 15 U.S.C. 78f.

[14] 15 U.S.C. 78f(b)(5).

A. Exchange Delisting

Amended SEC Rule 12d2–2(b) states that a national securities exchange may file an application on Form 25 to strike a class of securities from listing and/or withdraw the registration of such securities, in accordance with its rules, if the rules of such exchange, at a minimum, provide for notice to the issuer of the exchange's decision to delist, opportunity for appeal, and public notice of the exchange's final determination to delist. The Commission believes that Phlx's current rules and proposal comply with the dictates of amended SEC Rule 12d2–2(b).

Phlx rules currently provide the requisite issuer notice as well as an opportunity for appeal to a committee designated by the Exchange's Board of Governors. Specifically, issuers may appeal delisting determinations by the Allocation, Evaluation and Securities Committee to an ad hoc Exchange committee appointed by the Board of Governors and the committee will consist of three persons, at least one of which must be a member of the Board of Governors.[15] Finally, the proposed rule change will provide for public notice of the exchange's final determination to remove the security from listing and/or registration. This should ensure that investors have adequate notice of an exchange delisting and is consistent with the protection of investors under Section 6(b)(5) of the Act.[16]

B. Issuer Voluntary Delisting

The Exchange proposes to set forth in its Exchange rules the general requirements of amended SEC Rule 12d2–2(c) regarding issuer voluntary delisting. Accordingly, amended Phlx Rule 809 would state that an issuer shall delist its security by filing Form 25 electronically via Edgar in compliance with all of the requirements of amended SEC Rule 12d2–2(c). The Commission believes that the proposal will better inform issuers of the requirements for voluntary delisting of their securities under Phlx rules and federal securities laws.

The proposal also sets forth a new requirement not in amended SEC Rule 12d2–2 that would require an issuer seeking to voluntarily delist its security to provide a copy of the Form 25 that it has filed with the Commission simultaneously with such filing. The Commission believes that this requirement will allow the Exchange to be fully informed of the filing of a Form 25 and be prepared to take timely action to delist the security in accordance with the filing of the Form.

In addition, Phlx proposes to amend Phlx Rule 809 to clarify that not less than ten days before the issuer submits Form 25, an issuer seeking to voluntarily apply to withdraw a security from listing on the Exchange where the issuer has received notice from the Exchange, pursuant to Phlx Rule 811 or otherwise, that the issuer is below the Exchange's continued listing policies and standards, or that the issuer is aware that it is below such continued listing policies and standards notwithstanding that it has not received such notice from the Exchange, must:

(i) Provide written notice to the Exchange of its decision to withdraw from listing indicating all material facts relating to the reasons for withdraw in compliance with amended SEC Rule12d2–2(c); and

(ii) Contemporaneously with providing such notice to the Exchange disclose that it is no longer eligible for continued listing (including the specific continued listing policies and standards that the issue is below) in (A) its statement of all material facts relating to the reasons for withdrawal from listing provided to the Exchange along with written notice of its determination to withdraw from listing required by amended SEC Rule12d2–2(c)(2)(ii), and (B) its release and Web site notice required by amended SEC Rule 12d2–2(c)(2)(iii).[17]

The Commission believes that this requirement will allow shareholders to be informed and aware that the issuer has failed to meet Exchange listing standards and is voluntarily delisting with the consent of the Exchange. Issuers will therefore not be permitted to delist voluntarily without public disclosure of their noncompliance with Exchange listing standards.

C. Accelerated Approval of Proposed Rule Change and Amendment No. 1, and Amendment Nos. 2 and 3

Pursuant to Section 19(b)(2) of the Act,[18] the Commission may not approve any proposed rule change, or amendment thereto, prior to the 30th day after the date of publication of notice of the filing thereof, unless the Commission finds good cause for so doing and publishes its reasons for so finding. The Commission hereby finds good cause for approving the proposed rule change, as amended, prior to the 30th day after publishing notice of the proposed rule change and Amendment Nos. 1, 2, and 3 in the **Federal Register**. In the SEC Rule 12d2–2 Approval Order, the Commission stated that the compliance date of the amendments is April 24, 2006.[19] In addition, no comments were received on the proposal, as originally published.[20] Accelerated approval of the proposal, as amended, would enable the Exchange's amended rules to become operative by the compliance date set forth by the Commission.

The Commission further finds good cause for approving Amendment Nos. 2 and 3 to the proposal, prior to the 30th day after publishing notice of Amendment Nos. 2 and 3 in the **Federal Register**. In Amendment No. 2, Phlx amended its rule text to clarify that an issuer that is below the continued listing policies and standards of the Exchange and seeks to voluntarily apply to withdraw a class of securities from listing must disclose its status. In Amendment No. 3, the Exchange revised Phlx Rule 811 to clarify that an issuer that is below the continued listing policies and standards of the Exchange and considering delisting may file a delisting application pursuant to the procedures outlined in amended Phlx Rule 809(b)–(c).

As previously discussed, the revisions made to the proposal in Amendment No. 2 will allow shareholders to be informed and aware that the issuer has failed to meet Exchange listing standards and is voluntarily delisting with the consent of the Exchange. The Commission believes that granting accelerated approval of Amendment No. 2 will permit the Exchange to implement this new provision as expeditiously as possible, to the benefit of investors. In addition, the revisions made to the proposal in Amendment No. 3 are clarifying changes. The Commission also believes that accelerating approval of Amendment Nos. 2 and 3 is appropriate because these revisions do not raise new regulatory issues.

Accordingly, pursuant to Section 19(b)(2) of the Act,[21] the Commission finds good cause to approve the proposed rule change, as amended, prior to the 30th day after notice of the proposed rule change and Amendment

[15] The other two members of the Committee may be governors, members, Exchange officials, and/or other persons (not having an interest in the matter) as the Chairman of the Board of Governors shall determine. *See* Phlx Rule 811(d).

[16] 15 U.S.C. 78f(b)(5).

[17] *See* Amendment No. 2, *supra* note 5.

[18] 15 U.S.C. 78s(b)(2).

[19] *See* SEC Rule 12d2–2 Approval Order, *supra* note 10.

[20] *See* note 4, *supra*.

[21] *Id*.

Nos. 1, 2, and 3 are published in the **Federal Register**.

IV. Solicitation of Comments

Interested persons are invited to submit written data, views, and arguments concerning Amendment Nos. 2 and 3, including whether Amendment Nos. 2 and 3 are consistent with the Act. Comments may be submitted by any of the following methods:

Electronic Comments

- Use the Commission's Internet comment form (*http://www.sec.gov/rules/sro.shtml*); or
- Send an e-mail to *rule-comments@sec.gov*. Please include File Number SR–Phlx–2005–62 on the subject line.

Paper Comments

- Send paper comments in triplicate to Nancy M. Morris, Secretary, Securities and Exchange Commission, 100 F Street, NE., Washington, DC 20549–1090.

All submissions should refer to File Number SR–Phlx–2005–62. This file number should be included on the subject line if e-mail is used. To help the Commission process and review your comments more efficiently, please use only one method. The Commission will post all comments on the Commission's Internet Web site (*http://www.sec.gov/rules/sro.shtml*). Copies of the submission, all subsequent amendments, all written statements with respect to the proposed rule change that are filed with the Commission, and all written communications relating to the proposed rule change between the Commission and any person, other than those that may be withheld from the public in accordance with the provisions of 5 U.S.C. 552, will be available for inspection and copying in the Commission's Public Reference Room. Copies of the filing also will be available for inspection and copying at the principal office of the Phlx. All comments received will be posted without change; the Commission does not edit personal identifying information from submissions. You should submit only information that you wish to make available publicly. All submissions should refer to File Number SR–Phlx–2005–62 and should be submitted on or before May 18, 2006.

V. Conclusion

It is therefore ordered, pursuant to Section 19(b)(2) of the Act,[22] that the proposed rule change (File No. SR–Phlx–2005–62), as amended by Amendment Nos. 1, 2, and 3, is approved on an accelerated basis.

For the Commission, by the Division of Market Regulation, pursuant to delegated authority.[23]

J. Lynn Taylor,

Assistant Secretary.

[FR Doc. E6–6345 Filed 4–26–06; 8:45 am]

BILLING CODE 8010–01–P

[22] 15 U.S.C. 78s(b)(2).

[23] 17 CFR 200.30–3(a)(12).

SMALL BUSINESS ADMINISTRATION

Small Business Size Standards: Waiver of the Nonmanufacturer Rule

AGENCY: U.S. Small Business Administration.

ACTION: Notice of waiver of the Nonmanufacturer Rule for certain Petroleum Products.

SUMMARY: The U.S. Small Business Administration (SBA) is granting a request for a waiver of the Nonmanufacturer Rule for Industrial Gases Manufacturing; Refinery Gases made in Petroleum Refineries; Cyrogenic Tanks, Heavy Gauge Metal Manufacturing; Liquid Oxygen Tanks Manufacturing; Liquefied Petroleum Gases (LPG) Cylinders Manufacturing; Bulk Storage Tanks, Heavy Gauge Metal, Manufacturing; Gas Storage Tanks, Heavy Gauge Metal, Manufacturing; and Cylinders, Pressure, Heavy Gauge Metal, Manufacturing.

The effect of a waiver would be to allow otherwise qualified regular dealers to supply the products of any domestic manufacturer on a Federal contract set aside for small businesses; service-disabled veteran-owned small businesses or SBA's 8(a) Business Development Program.

DATES: This waiver is effective May 12, 2006.

FOR FURTHER INFORMATION CONTACT: Edith Butler, Program Analyst, by telephone at (202) 619–0422; by FAX at (202) 481–1788; or by e-mail at *edith.butler@sba.gov*.

SUPPLEMENTARY INFORMATION: Section 8(a)(17) of the Small Business Act (Act), 15 U.S.C. 637(a)(17), requires that recipients of Federal contracts set aside for small businesses, service-disabled veteran-owned small businesses, or SBA's 8(a) Business Development Program provide the product of a small business manufacturer or processor, if the recipient is other than the actual manufacturer or processor of the product. This requirement is commonly referred to as the Nonmanufacturer Rule. The SBA regulations imposing this requirement are found at 13 CFR 121.406(b). Section 8(a)(17)(b)(iv) of the Act authorizes SBA to waive the Nonmanufacturer Rule for any ''class of products'' for which there are no small business manufacturers or processors available to participate in the Federal market.

As implemented in SBA's regulations at 13 CFR 121.1202(c), in order to be considered available to participate in the Federal market for a class of products, a small business manufacturer must have submitted a proposal for a contract solicitation or received a contract from the Federal government within the last 24 months. The SBA defines ''class of products'' based on a six digit coding system. The coding system is the Office of Management and Budget North American Industry Classification System (NAICS).

The SBA received a request on January 10, 2006 to waive the Nonmanufacturer Rule for Industrial Gases Manufacturing; Refinery Gases made in Petroleum Refineries; Cyrogenic Tanks, Heavy Gauge Metal Manufacturing; Liquid Oxygen Tanks Manufacturing; Liquefied Petroleum Gases (LPG) Cylinders Manufacturing; Bulk Storage Tanks, Heavy Gauge Metal, Manufacturing; Gas Storage Tanks, Heavy Gauge Metal, Manufacturing; and Cylinders, Pressure, Heavy Gauge Metal, Manufacturing.

In response, on February 24, 2006 SBA published in the **Federal Register** a notice of intent to waive the Nonmanufacturer Rule for Industrial Gases Manufacturing; Refinery Gases made in Petroleum Refineries; Cyrogenic Tanks, Heavy Gauge Metal Manufacturing; Liquid Oxygen Tanks Manufacturing; Liquefied Petroleum Gases (LPG) Cylinders Manufacturing; Bulk Storage Tanks, Heavy Gauge Metal, Manufacturing; Gas Storage Tanks, Heavy Gauge Metal, Manufacturing; and Cylinders, Pressure, Heavy Gauge Metal, Manufacturing. SBA explained in the notice that it was soliciting comments and sources of small business manufacturers of these classes of products. In response to this notice, comments were received from interested parties. SBA has determined that there are no small business manufacturers of these classes of products, and is therefore granting the waiver of the Nonmanufacturer Rule for Industrial Gases Manufacturing; Refinery Gases made in Petroleum Refineries; Cyrogenic Tanks, Heavy Gauge Metal Manufacturing; Liquid Oxygen Tanks Manufacturing; Liquefied Petroleum Gases (LPG) Cylinders Manufacturing; Bulk Storage Tanks, Heavy Gauge Metal,

Manufacturing; Gas Storage Tanks, Heavy Gauge Metal, Manufacturing; and Cylinders, Pressure, Heavy Gauge Metal, Manufacturing, (NAICS) codes 325120, 324110 and 332420.

Authority: 15 U.S.C. 637(a)(17).

Dated: April 20, 2006.

Karen C. Hontz,

Associate Administrator for Government Contracting.

[FR Doc. E6–6343 Filed 4–26–06; 8:45 am]

BILLING CODE 8025–01–P

DEPARTMENT OF STATE

[Public Notice 5394]

30-Day Notice of Proposed Information Collection: DS–3077, Request for Entry Into Children's Passport Issuance Alert Program, OMB 1405–XXXX.

ACTION: Notice of request for public comments and submission to OMB of proposed collection of information.

SUMMARY: The Department of State has submitted the following information collection request to the Office of Management and Budget (OMB) for approval in accordance with the Paperwork Reduction Act of 1995.

- *Title of Information Collection:* Request for Entry into Children's Passport Issuance Alert Program.
- *OMB Control Number:* None.
- *Type of Request:* New collection.
- *Originating Office:* CA/OCS/CI.
- *Form Number:* DS–3077.
- *Respondents:* Concerned parents or their agents, institutions, or courts.
- *Estimated Number of Respondents:* 2400/year.
- *Estimated Number of Responses:* 2400/year.
- *Average Hours Per Response:* 50 minutes.
- *Total Estimated Burden:* 1992 hours/year.
- *Frequency:* On occasion.
- *Obligation to Respond:* Required to obtain or retain a benefit.

DATES: Submit comments to the Office of Management and Budget (OMB) for up to 30 days from April 27, 2006.

ADDRESSES: Direct comments and questions to Alexander Hunt, the Department of State Desk Officer in the Office of Information and Regulatory Affairs at the Office of Management and Budget (OMB), who may be reached at (202) 395–7860. You may submit comments by any of the following methods:

- E-mail: *ahunt@omb.eop.gov.* You must include the DS form number, information collection title, and OMB control number in the subject line of your message.
- Mail (paper, disk, or CD–ROM submissions): Office of Information and Regulatory Affairs, Office of Management and Budget, 725 17th Street, NW., Washington, DC 20530.
- Fax: 202–395–6974.

FOR FURTHER INFORMATION CONTACT: Requests for additional information regarding the collection listed in this notice, including requests for copies of the proposed information collection should be made to Corrin Ferber, Attorney Advisor, CA/OCS/PRI, U.S. Department of State, Washington, DC 20520–4818 , who may be reached on 202–736–9172 or *ferbercm@state.gov.*

SUPPLEMENTARY INFORMATION: We are soliciting public comments to permit the Department to:

- Evaluate whether the proposed information collection is necessary for the proper performance of our functions.
- Evaluate the accuracy of our estimate of the burden of the proposed collection, including the validity of the methodology and assumptions used.
- Enhance the quality, utility, and clarity of the information to be collected.
- Minimize the reporting burden on those who are to respond, including through the use of automated collection techniques or other forms of technology.

Abstract of Proposed Collection

The information requested will be used to support entry of a minor's (an unmarried person under 18) name into the Children's Passport Issuance Alert Program (CPIAP). CPIAP provides a mechanism for concerned parents (other than parents whose parental rights have been terminated by court order), their appointed agents, or other persons having legal custody of the child to obtain information regarding whether the Department has received a passport application for the minor. This program was developed as a means to prevent international abduction of a minor or to help prevent other travel of a minor without the consent of a parent or legal guardian. If a minor's name and other identifying information has been entered into the CPIAP, when the Department receives an application for a new, replacement, or renewed passport for the minor, the application will be placed on hold for up to 60 days and the Office of Children's Issues will attempt to notify the requestor of receipt of the application. Form DS–3077 will be primarily submitted by a parent or legal guardian of a minor.

Methodology

The completed form DS–3077 may be submitted to the Office of Children's Issues by mail, by fax, or electronically through *http://www.travel.state.gov.*

Dated: March 28, 2006.

Catherine Barry,

Deputy Assistant Secretary, Consular Affairs, Overseas Citizens Services, Department of State.

[FR Doc. E6–6358 Filed 4–26–06; 8:45 am]

BILLING CODE 4710–06–P

DEPARTMENT OF STATE

[Public Notice 5397]

Determination Pursuant to Section 1(b) of Executive Order 13224 Relating to Lashkar-e-Tayyiba (LT, LET), aka Lashkar-e-Toiba, aka Lashkar-i-Taiba, aka al Mansoorian, aka al Mansooreen, aka Army of the Pure, aka Army of the Righteous, aka Army of the Pure and Righteous, aka Paasban-e-Kashmir, aka Paasban-i-Ahle-Hadith, aka Pasban-e-Kashmir, aka Pasban-e-Ahle-Hadith, aka Paasban-e-Ahle-Hadis

Acting under the authority of Section 1(b) of Executive Order 13224 of September 23, 2001, as amended, and in consultation with the Secretary of the Treasury, the Attorney General, and the Secretary of Homeland Security, I hereby determine that Lashkar-e-Tayyiba uses or has used the following aliases in addition to those listed above: Jamaat-ud-Dawa, JUD, Jama'at al-Dawa, Jamaat ud-Daawa, Jamaat ul-Dawah, Jamaat-ul-Dawa, Jama'at-i-Dawat, Jamaiat-ud-Dawa, Jama'at-ud-Da'awah, Jama'at-ud-Da'awa, Jamaati-ud-Dawa, and Idara Khidmat-e-Khalq.

I hereby amend the designation of Lashkar-e-Tayyiba (and its aliases) to add the following names as aliases together with any transliterations of these names: Jamaat-ud-Dawa, aka JUD, aka Jama'at al-Dawa, aka Jamaat ud-Daawa, aka Jamaat ul-Dawah, aka Jamaat-ul-Dawa, aka Jama'at-i-Dawat, aka Jamaiat-ud-Dawa, aka Jama'at-ud-Da'awah, aka Jama'at-ud-Da'awa, aka Jamaati-ud-Dawa, aka Idara Khidmat-e-Khalq.

Condoleezza Rice,

Secretary of State, Department of State.

[FR Doc. 06–4005 Filed 4–26–06; 5:00 pm]

BILLING CODE 4710–10–P

DEPARTMENT OF STATE

[Public Notice 5395]

Bureau of Educational and Cultural Affairs Request for Grant Proposals: Professional Development Program for Indian and Pakistani Teachers

Announcement Type: New Cooperative Agreement.

Catalog of Federal Domestic Assistance Number: 00.00.

Funding Opportunity Number: ECA/A/S/X–06–09.

Application Deadline: June 13, 2006.

Executive Summary: The Fulbright Teacher Exchange Branch in the Office of Global Educational Programs of the Bureau of Educational and Cultural Affairs (ECA) announces an open competition for a $500,000 grant to support the Professional Development Program for Indian and Pakistani Teachers. Accredited U.S. post-secondary educational institutions described in Internal Revenue Code section 26 U.S.C. 501(c)(3) with expertise in teaching English as a Foreign Language (EFL) may submit proposals which combine EFL teaching methodology, curriculum development, and development of leadership and communication skills for up to 30 Indian and Pakistani secondary school teachers. The program will begin with a six-week U.S.-based professional development program for the Indian and Pakistani educators and conclude with joint workshops in India and Pakistan for these teachers. The program should expose the educators to U.S. teaching methodologies, including educational tools designed to increase students' ability to deal with conflict and to cooperate effectively with people of diverse backgrounds. The program proposal should demonstrate the applicant's understanding of issues that are important in English language education in India and Pakistan and the applicant's experience developing educational programs and material for EFL teachers. Proposals should also demonstrate a sensitivity to challenges of educational cooperation between India and Pakistan.

I. Funding Opportunity Description

I.1. Authority

Overall grant making authority for this program is contained in the Mutual Educational and Cultural Exchange Act of 1961, Public Law 87–256, as amended, also known as the Fulbright-Hays Act. The purpose of the Act is ''to enable the Government of the United States to increase mutual understanding between the people of the United States and the people of other countries * * *; to strengthen the ties which unite us with other nations by demonstrating the educational and cultural interests, developments, and achievements of the people of the United States and other nations * * * and thus to assist in the development of friendly, sympathetic and peaceful relations between the United States and the other countries of the world.'' The funding authority for the program above is provided through legislation.

1.2. Program Goals

1.2a. To strengthen EFL pedagogy and the leadership skills of teachers in India and Pakistan by giving secondary school teachers the opportunity to share best practices and methodology from their own countries with each other and to learn about EFL innovations in the United States.

1.2b. To introduce the teachers to conflict resolution concepts and tools for implementation in the classroom.

1.2c. To strengthen mutual understanding between India, Pakistan, and the U.S. by encouraging the teachers to develop meaningful working relationships with one another and their U.S. colleagues.

1.3. Planning

The cooperating institution will be responsible for conducting an initial planning visit to India, and, if feasible, Pakistan, to consult with representatives from the respective United States Educational Foundations (Fulbright Commissions) in India and Pakistan, Ministries of Education, and local educators. The cooperating institution should also consult with the Department of State's Regional English Language Officer (RELO) based at the U.S. Embassy in New Delhi. RELOs are credentialed, experienced foreign service and English as a Foreign Language officers based at U.S. embassies who work with host-country Ministries of Education, universities and teacher-training officials on targeted English language programs. Based on assessments made during this planning visit, the cooperating institution will develop a recruitment plan, a detailed schedule, and curriculum for the U.S.-based program.

The Fulbright Commissions in India and Pakistan will recruit and select participants for the program with support from the cooperating institution. The cooperating institution will be responsible for preparing publicity, recruitment and selection materials, including an application form. Special efforts will be made to recruit teachers working in non-elite institutions.

Prior to participants' departure for the United States, the Fulbright Commissions in India and Pakistan will conduct pre-departure orientations for participants from their respective countries based on information provided by the cooperating institution. The orientations will provide information about the program, goals, and our expectations of participants, as well as address issues about the participants' stay in the U.S. The cooperating institution will work closely with both Fulbright Commissions to organize the orientations and will develop orientation packets for each participant that cover the aforementioned material. Packets will be sent to the Fulbright Commissions in advance of the scheduled pre-departure orientations. The cooperating institution also should develop a Web site on the program for use during the pre-departure orientation sessions and during subsequent program stages.

1.4. Program Components

The applicant should design and implement a two-phased program: a U.S professional development program for Indian and Pakistani secondary school teachers and subsequent workshops in India and Pakistan for these program participants.

(a) Pending the availability of funds, the U.S.-based six-week professional development program will begin in Spring 2007. The program must comply with J–1 visa regulations. Please refer to the Solicitation Package for further information.

The U.S. program should meet the needs of the Indian and Pakistani participants through EFL instruction as well as curriculum and professional development programs. The program should update the secondary school teachers on best practices in EFL instruction and should also present skills for interacting harmoniously with people of different backgrounds. EFL methodologies focusing on student-centered learning; teaching tolerance, mutual respect, and trust building; strengthening of students' problem-solving, cross-cultural communication, and leadership skills; and computer literacy for EFL instruction should all be included in the program. Time should be allotted to activities outside of the classroom such as visits to schools, team-teaching with U.S. teachers, and attendance at professional meetings. The six-week program should conclude with a visit of three days to Washington, DC. This visit should include meetings

with representatives of the Department of State, other government agencies, schools, and private-sector educational associations as well as trips to local educational and cultural sites.

(b) The workshops abroad, the second program component, should begin approximately six months after the conclusion of the U.S. training program. There will be one in India and one in Pakistan. The fifteen Pakistani participants will travel to India to join their Indian counterparts and help facilitate a workshop for 100 additional Indian teachers. Subsequently, the fifteen Indian participants will travel to Pakistan for a similar joint workshop for 100 additional Pakistani teachers. Each of these workshops should be approximately two days in length and at least one month should elapse between them.

The cooperating institution will coordinate program plans and schedules with ECA's Fulbright Teacher Exchange Branch (ECA/A/S/X) as well as with the Fulbright Commissions in India and Pakistan and the Regional English Language Officer (RELO) based at the U.S. Embassy in New Delhi. The Fulbright Teacher Exchange Branch will approve final program schedules before program implementation.

II. Award Information

Type of Award: Cooperative Agreement.

Fiscal Year Funds: FY 2006.

Approximate Total Funding: $500,000.

Approximate Number of Awards: 1.

Approximate Average Award: $500,000.

Anticipated Award Date: September 1, 2006.

Anticipated Project Completion Date: March 31, 2008.

Additional Information: Pending successful implementation of this program and the availability of funds in subsequent fiscal years, ECA retains the option to renew this grant for two additional years, before openly competing it again.

Eligibility Information

III.1. Eligible Applicants

Applications may be submitted by accredited U.S. post-secondary institutions meeting the provisions described in Internal Revenue Code section 26 U.S.C. 501(c)(3).

III.2. Cost Sharing or Matching Funds

There is no minimum or maximum percentage required for this competition; however, the Bureau encourages applicants to provide maximum levels of cost sharing and funding in support of its programs.

When cost sharing is offered, it is understood and agreed that the applicant must provide the amount of cost sharing as stipulated in its proposal and later included in an approved grant agreement. Cost sharing may be in the form of allowable direct or indirect costs. For accountability, you must maintain written records to support all costs that are claimed as your contribution, as well as costs to be paid by the Federal government. Such records are subject to audit. The basis for determining the value of cash and in-kind contributions must be in accordance with OMB Circular A–110, (Revised), Subpart C.23—Cost Sharing and Matching. In the event you do not provide the minimum amount of cost sharing as stipulated in the approved budget, ECA's contribution will be reduced in like proportion.

III.3. Other Eligibility Requirements

Bureau grant guidelines require that organizations with less than four years experience in conducting international exchanges are limited to $60,000 in Bureau funding. ECA anticipates awarding one grant, in an amount up to $500,000 to support program and administrative costs required to implement this exchange program. Therefore, organizations with less than four years experience in conducting international exchanges are ineligible to apply under this competition. The Bureau encourages applicants to provide maximum levels of cost sharing and funding in support of its programs.

IV. Application and Submission Information

Note: Please read the complete announcement before sending inquiries or submitting proposals. Once the RFGP deadline has passed, Bureau staff may not discuss this competition with applicants until the proposal review process has been completed.

IV.1. Contact Information to Request an Application Package

Please contact the Office of Global Educational Programs, ECA/A/S/X, Room 349, U.S. Department of State, SA–44, 301 4th Street, SW., Washington, DC 20547, tel. (202) 453–8897, fax (202) 453–8890, or e-mail *Mosleypj@state.gov* to request a Solicitation Package. Please refer to the Funding Opportunity Number ECA/A/S/X 06–09 located at the top of this announcement when making your request. Alternatively, an electronic application package may be obtained from grants.gov. Please see section IV.3f for further information.

The Solicitation Package contains the Proposal Submission Instruction (PSI) document, which consists of required application forms, and standard guidelines for proposal preparation.

It also contains the Project Objectives, Goals and Implementation (POGI) document, which provides specific information, award criteria and budget instructions tailored to this competition.

Please specify Program Officer Joan Zaffarano and refer to the Funding Opportunity Number ECA/A/S/X 06–09 located at the top of this announcement on all other inquiries and correspondence.

IV.2. To Download a Solicitation Package Via Internet

The entire Solicitation Package may be downloaded from the Bureau's Web site at *http://exchanges.state.gov/education/rfgps/menu.htm.* or from the Grants.gov Web site at *http://www.grants.gov.* Please read all information before downloading.

IV.3. Content and Form of Submission

Applicants must follow all instructions in the Solicitation Package. The original and seven copies of the application should be sent per the instructions under IV.3f. ''Application Deadline and Methods of Submission'' section below.

IV.3a. You are required to have a Dun and Bradstreet Data Universal Numbering System (DUNS) number to apply for a grant or cooperative agreement from the U.S. Government. This number is a nine-digit identification number, which uniquely identifies business entities. Obtaining a DUNS number is easy and there is no charge. To obtain a DUNS number, access *http://www.dunandbradstreet.com* or call 1–866–705–5711. Please ensure that your DUNS number is included in the appropriate box of the SF–424 which is part of the formal application package.

IV.3b. All proposals must contain an executive summary, proposal narrative and budget.

Please Refer to the Solicitation Package. It contains the mandatory Proposal Submission Instructions (PSI) document and the Project Objectives, Goals and Implementation (POGI) document for additional formatting and technical requirements.

IV.3c. You must have nonprofit status with the IRS at the time of application. If your organization is a private nonprofit which has not received a grant or cooperative agreement from ECA in the past three years, or if your

organization received nonprofit status from the IRS within the past four years, you must submit the necessary documentation to verify nonprofit status as directed in the PSI document. Failure to do so will cause your proposal to be declared technically ineligible.

IV.3d. Please take into consideration the following information when preparing your proposal narrative:

IV.3d.1. Adherence to All Regulations Governing the J Visa. The Bureau of Educational and Cultural Affairs is placing renewed emphasis on the secure and proper administration of Exchange Visitor (J visa) Programs and adherence by grantees and sponsors to all regulations governing the J visa. Therefore, proposals should demonstrate the applicant's capacity to meet all requirements governing the administration of the Exchange Visitor Programs as set forth in 22 CFR 62, including the oversight of Responsible Officers and Alternate Responsible Officers, screening and selection of program participants, provision of pre-arrival information and orientation to participants, monitoring of participants, proper maintenance and security of forms, record-keeping, reporting and other requirements. The cooperating institution will be responsible for issuing DS–2019 forms to participants in this program.

A copy of the complete regulations governing the administration of Exchange Visitor (J) programs is available at *http://exchanges.state.gov* or from: United States Department of State, Office of Exchange Coordination and Designation, ECA/EC/ECD—SA–44, Room 734, 301 4th Street, SW., Washington, DC 20547. Telephone: (202) 203–5029. FAX: (202) 453–8640.

Please refer to Solicitation Package for further information.

IV.3d.2. Diversity, Freedom and Democracy Guidelines. Pursuant to the Bureau's authorizing legislation, programs must maintain a non-political character and should be balanced and representative of the diversity of American political, social, and cultural life. ''Diversity'' should be interpreted in the broadest sense and encompass differences including, but not limited to ethnicity, race, gender, religion, geographic location, socio-economic status, and disabilities. Applicants are strongly encouraged to adhere to the advancement of this principle both in program administration and in program content. Please refer to the review criteria under the 'Support for Diversity' section for specific suggestions on incorporating diversity into your proposal. Public Law 104–319 provides that ''in carrying out programs of educational and cultural exchange in countries whose people do not fully enjoy freedom and democracy,'' the Bureau ''shall take appropriate steps to provide opportunities for participation in such programs to human rights and democracy leaders of such countries.'' Public Law 106–113 requires that the governments of the countries described above do not have inappropriate influence in the selection process. Proposals should reflect advancement of these goals in their program contents, to the full extent deemed feasible.

IV.3d.3. Program Monitoring and Evaluation. Proposals must include a plan to monitor and evaluate the project's success, both as the activities unfold and at the end of the program. The Bureau recommends that your proposal include a draft survey questionnaire or other technique plus a description of a methodology to use to link outcomes to original project objectives. The Bureau expects that the cooperating institution will track participants or partners and be able to respond to key evaluation questions, including satisfaction with the program, learning as a result of the program, changes in behavior as a result of the program, and effects of the program on institutions (institutions in which participants work or partner institutions). The evaluation plan should include indicators that measure gains in mutual understanding as well as substantive knowledge.

Successful monitoring and evaluation depend heavily on setting clear goals and outcomes at the outset of a program. Your evaluation plan should include a description of your project's objectives, your anticipated project outcomes, and how and when you intend to measure these outcomes (performance indicators). The more that outcomes are ''smart'' (specific, measurable, attainable, results-oriented, and placed in a reasonable time frame), the easier it will be to conduct the evaluation. You should also show how your project objectives link to the goals of the program described in this RFGP.

Your monitoring and evaluation plan should clearly distinguish between program *outputs* and *outcomes*. *Outputs* are products and services delivered, often stated as an amount. Output information is important to show the scope or size of project activities, but it cannot substitute for information about progress towards outcomes or the results achieved. Examples of outputs include the number of people trained or the number of seminars conducted. *Outcomes*, in contrast, represent specific results a project is intended to achieve and is usually measured as an extent of change. Findings on outputs and outcomes should both be reported, but the focus should be on outcomes.

We encourage you to assess the following four levels of outcomes, as they relate to the program goals set out in the RFGP (listed here in increasing order of importance):

1. Participant satisfaction with the program and exchange experience.
2. Participant learning, such as increased knowledge, aptitude, skills, and changed understanding and attitude. Learning includes both substantive (subject-specific) learning and mutual understanding.
3. Participant behavior, concrete actions to apply knowledge in work or community; greater participation and responsibility in civic organizations; interpretation and explanation of experiences and new knowledge gained; continued contacts between participants, community members, and others.
4. Institutional changes, such as increased collaboration and partnerships, policy reforms, new programming, and organizational improvements.

Please note: Consideration should be given to the appropriate timing of data collection for each level of outcome. For example, satisfaction is usually captured as a short-term outcome, whereas behavior and institutional changes are normally considered longer-term outcomes.

Overall, the quality of your monitoring and evaluation plan will be judged on how well it (1) Specifies intended outcomes; (2) gives clear descriptions of how each outcome will be measured; (3) identifies when particular outcomes will be measured; and (4) provides a clear description of the data collection strategies for each outcome (*i.e.*, surveys, interviews, or focus groups). (Please note that evaluation plans that deal only with the first level of outcomes [satisfaction] will be deemed less competitive under the present evaluation criteria.)

Cooperating institutions will be required to provide reports analyzing their evaluation findings to the Bureau in their regular program reports. All data collected, including survey responses and contact information, must be maintained for a minimum of three years and provided to the Bureau upon request.

IV.3d.4. Describe your plans for: sustainability, overall program management, staffing, and coordination with ECA/A/S/X, the RELO at the U.S. Embassy in New Delhi and the Fulbright Commissions of India and Pakistan.

ECA/A/S/X considers program management, staffing and coordination

with the Department of State essential elements of the program. Please be sure to give sufficient attention to these elements in your proposal by providing a staffing plan that outlines the responsibilities of each staff person and explains which staff member will be accountable for each program responsibility. Wherever possible please streamline administrative processes. Please refer to the POGI in the Solicitation Package for specific guidelines.

IV.3e. Please take the following information into consideration when preparing your budget:

IV.3e.1. Applicants must submit a comprehensive budget for the entire program. The budget should not exceed $500,000 for program and administrative costs. There must be a summary budget as well as breakdowns reflecting both administrative and program budgets. Applicants may provide separate sub-budgets for each program component, phase, location, or activity to provide clarification.

IV.3f. Application Deadline and Methods of Submission: Application Deadline Date: June 13, 2006. Reference Number: ECA/A/S/X–06–09.

IV.3f.1. Applications may be submitted in one of two ways:

1. In hard-copy, via a nationally recognized overnight delivery service (*i.e.*, DHL, Federal Express, UPS, Airborne Express, or U.S. Postal Service Express Overnight Mail, etc.), or

2. Electronically through *http://www.grants.gov*.

Along with the Project Title, all applicants must enter the above Reference Number in Box 11 on the SF–424 contained in the mandatory Proposal Submission Instructions (PSI) of the solicitation document.

IV.3f.2. Submitting Printed Applications. Applications must be shipped no later than the above deadline. Delivery services used by applicants must have in-place, centralized shipping identification and tracking systems that may be accessed via the Internet and delivery people who are identifiable by commonly recognized uniforms and delivery vehicles. Proposals shipped on or before the above deadline but received at ECA more than seven days after the deadline will be ineligible for further consideration under this competition. Proposals shipped after the established deadlines are ineligible for consideration under this competition. ECA will *not* notify you upon receipt of application. It is each applicant's responsibility to ensure that each package is marked with a legible tracking number and to monitor/confirm delivery to ECA via the Internet. Delivery of proposal packages *may not* be made via local courier service or in person for this competition. Faxed documents will not be accepted at any time. Only proposals submitted as stated above will be considered.

Important note: When preparing your submission please make sure to include one extra copy of the completed SF–424 form and place it in an envelope addressed to ''ECA/EX/PM''.

The original and eight copies of the application should be sent to: U.S. Department of State, SA–44, Bureau of Educational and Cultural Affairs, Ref.: ECA/A/S/X–06–09, Program Management, ECA/EX/PM, Room 534, 301 4th Street, SW., Washington, DC 20547.

Applicants submitting hard-copy applications must also submit the ''Executive Summary'' and ''Proposal Narrative'' sections of the proposal in text (.txt) format on a PC-formatted disk. The Bureau will provide these files electronically to the appropriate Public Affairs Sections at the U.S. embassies for their review.

IV.3f.2. Submitting Electronic Applications. Applicants have the option of submitting proposals electronically through Grants.gov (*http://www.grants.gov*). Complete solicitation packages are available at Grants.gov in the ''Find'' portion of the system. Please follow the instructions available in the ''Get Started'' portion of the site (*http://www.grants.gov/GetStarted*).

Applicants have until midnight (12 a.m.) of the closing date to ensure that their entire application has been uploaded to the grants.gov site. Applications uploaded to the site after midnight of the application deadline date will be automatically rejected by the grants.gov system, and will be technically ineligible.

Applicants will receive confirmation e-mail from grants.gov upon the successful submission of an application. ECA will *not* notify you upon receipt of electronic applications.

IV.3g. Intergovernmental Review of Applications: Executive Order 12372 does not apply to this program.

V. Application Review Information

V.1. Review Process

The Bureau will review all proposals for technical eligibility. Proposals will be deemed ineligible if they do not fully adhere to the guidelines stated herein and in the Solicitation Package. The program office, as well as the Public Diplomacy section overseas, where appropriate will review all eligible proposals. Eligible proposals will be subject to compliance with Federal and Bureau regulations and guidelines and forwarded to Bureau grant panels for advisory review. Proposals may also be reviewed by the Office of the Legal Adviser or by other Department elements. Final funding decisions are at the discretion of the Department of State's Assistant Secretary for Educational and Cultural Affairs. Final technical authority for assistance awards (cooperative agreements) resides with the Bureau's Grants Officer.

Review Criteria

Technically eligible applications will be competitively reviewed according to the criteria stated below. These criteria are not rank ordered and all carry equal weight in the proposal evaluation:

1. Program Development and Management: The proposal narrative should exhibit originality, substance, precision, and relevance to the Bureau's mission as well as the objectives of the program. The proposal should demonstrate substantive expertise in the development of English as a Foreign language and conflict resolution programs for educators. Proposals should illustrate effective use of community and regional resources to enhance the educational and cultural expertise of the participants. The program plan should be well conceived. Administrative resources should be adequate to support effective project administration.

2. Ability to achieve program objectives: Objectives should be reasonable, feasible, and flexible. Proposals should clearly demonstrate how the institution will meet the program objectives.

3. Support of Diversity: Proposals should demonstrate substantive support of the Bureau's policy on diversity. Achievable and relevant features should be cited in both program administration (staffing, program venue and program evaluation) and program content (orientation and workshop sessions, program meetings, resource materials and follow-up activities).

4. Institutional Capacity and Record: Proposals should demonstrate an institutional record of successful exchange programs, including responsible fiscal management and full compliance with all reporting requirements for past Bureau grants as determined by Bureau Grants Staff. Proposed personnel and institutional resources should be adequate and appropriate to achieve the program's goals.

5. Project Evaluation: Proposals should include a plan to evaluate the

project's success, both as the activities unfold and at the end of the program. Draft survey questionnaires or other techniques plus description of methodologies to use to link outcomes to original project objectives are recommended. Successful applicants will be expected to submit intermediate reports after the U.S.-based training program, and other project components are concluded, or quarterly, whichever is less frequent.

6. Cost-effectiveness and Cost Sharing: The overhead and administrative components of the proposal, including salaries and honoraria, should be kept as low as possible. All other items should be necessary and appropriate. Proposals should maximize cost sharing through other private sector support as well as institutional direct funding contributions.

7. Follow-on and Alumni Activities: Proposals should provide a plan for continued follow-on activity (both with and without Bureau support) ensuring that the Professional Development Program for Indian and Pakistani Teachers is not an isolated event.

VI. Award Administration Information

VI.1a. Award Notices. Final awards cannot be made until funds have been appropriated by Congress, allocated and committed through internal Bureau procedures. Successful applicants will receive an Assistance Award Document (AAD) from the Bureau's Grants Office. The AAD and the original grant proposal with subsequent modifications (if applicable) shall be the only binding authorizing document between the recipient and the U.S. Government. The AAD will be signed by an authorized Grants Officer, and mailed to the recipient's responsible officer identified in the application.

Unsuccessful applicants will receive notification of the results of the application review from the ECA program office coordinating this competition.

VI.2. Administrative and National Policy Requirements

Terms and Conditions for the Administration of ECA agreements include the following:

Office of Management and Budget Circular A–122, ''Cost Principles for Nonprofit Organizations.''

Office of Management and Budget Circular A–21, ''Cost Principles for Educational Institutions.''

OMB Circular A–87, ''Cost Principles for State, Local and Indian Governments''.

OMB Circular No. A–110 (Revised), Uniform Administrative Requirements for Grants and Agreements with Institutions of Higher Education, Hospitals, and other Nonprofit Organizations.

OMB Circular No. A–102, Uniform Administrative Requirements for Grants-in-Aid to State and Local Governments.

OMB Circular No. A–133, Audits of States, Local Government, and Non-profit Organizations.

Please reference the following Web sites for additional information: *http://www.whitehouse.gov/omb/grants. http://exchanges.state.gov/education/grantsdiv/terms.htm#articleI.*

VI.3. Reporting Requirements

You must provide ECA with a hard copy original plus one copy of the following reports: Intermediate reports after each project component (*i.e.*, U.S.-based program and then workshops in India and Pakistan) or quarterly reports, whichever is less frequent and final program and financial report no more than 90 days after the expiration of the award.

Cooperating institutions will be required to provide reports analyzing their evaluation findings to the Bureau in their regular program reports. (Please refer to Application and Submission Instructions (IV.3.d.3) above for Program Monitoring and Evaluation information.)

All data collected, including survey responses and contact information, must be maintained for a minimum of three years and provided to the Bureau upon request.

All reports must be sent to the ECA Grants Officer and ECA Program Officer listed in the final assistance award document.

VII. Agency Contacts

For questions about this announcement, contact Program Officer Joan Zaffarano, Office of Global Educational Programs, Room 349, ECA/A/S/X–06–09, U.S. Department of State, SA–44, 301 4th Street, SW., Washington, DC 20547; telephone (202) 453–8863; fax number (202) 453–8890, and e-mail: *ZaffaranoJG@state.gov.*

All correspondence with the Bureau concerning this RFGP should reference the above title and number ECA/A/S/X–06–09. Please read the complete announcement before sending inquiries or submitting proposals. Once the RFGP deadline has passed, Bureau staff may not discuss this competition with applicants until the proposal review process has been completed.

VIII. Other Information

Notice

The terms and conditions published in this RFGP are binding and may not be modified by any Bureau representative. Explanatory information provided by the Bureau that contradicts published language will not be binding. Issuance of the RFGP does not constitute an award commitment on the part of the Government. The Bureau reserves the right to reduce, revise, or increase proposal budgets in accordance with the needs of the program and the availability of funds. Awards made will be subject to periodic reporting and evaluation requirements per section VI.3 above.

Dated: April 21, 2006.

C. Miller Crouch,

Principal Deputy Assistant Secretary, Bureau of Educational and Cultural Affairs, Department of State.

[FR Doc. E6–6359 Filed 4–26–06; 8:45 am]

BILLING CODE 4710–05–P

DEPARTMENT OF STATE

[Public Notice 5396]

Bureau of Educational and Cultural Affairs (ECA)

Request for Grant Proposals: U.S-French Teachers-in-Training Program

Announcement Type: Cooperative Agreement.

Funding Opportunity Number: ECA/A/S/X–06–12.

Catalog of Federal Domestic Assistance Number: 00.000

Application Deadline: May 31, 2006.

Executive Summary: The Fulbright Teacher Exchange Branch in the Office of Global Educational Programs of the U.S. Department of State's Bureau of Educational and Cultural Affairs (ECA/A/S/X) announces an open competition for the U.S.-French Teachers-in-Training Program. Accredited, U.S. post-secondary educational institutions meeting the provisions described in Internal Revenue Code section 26 U.S.C. 501(c)(3) may submit proposals to administer a three-month teacher exchange program for U.S. and French pre-service teachers. Post-secondary educational institutions may apply independently or in a consortium with other post-secondary institutions. The program will provide approximately 30–35 French pre-service teachers, who are expected to serve socio-economically disadvantaged students in France, with a three-to-four week orientation to American history, culture and society, provided through professional

development seminars in an academic setting, and a two-month practical component, provided through practice teaching experience under the guidance of experienced mentor teachers at a U.S. school. Interested institutions should document strong contacts with local school districts in the United States in order to provide the practical student-teaching component for French pre-service teachers and a demonstrated ability to conduct a substantive seminar in an academic setting. The program will also provide a reciprocal program for U.S. pre-service teachers. In cooperation with the French Ministry of Education, with support from the Franco-American Commission for Educational Exchange (Fulbright Commission), the cooperating institution will recruit and select 30–35 U.S. pre-service or in-service teachers, and provide a pre-departure orientation and short-term French language training. The French partners will arrange an in-country orientation and a three-month student teaching internship for U.S. teachers. The total grant award for all program and administrative expenses will be approximately $350,000.

I. Funding Opportunity Description

I.1. Authority

Overall grant making authority for this program is contained in the Mutual Educational and Cultural Exchange Act of 1961, Public Law 87–256, as amended, also known as the Fulbright-Hays Act. The purpose of the Act is ''to enable the Government of the United States to increase mutual understanding between the people of the United States and the people of other countries * * *; to strengthen the ties which unite us with other nations by demonstrating the educational and cultural interests, developments, and achievements of the people of the United States and other nations * * * and thus to assist in the development of friendly, sympathetic and peaceful relations between the United States and the other countries of the world.'' The funding authority for the program above is provided through legislation.

I.2 Purpose

Overview

I.2a. Program Goals:

1. Contribute to mutual understanding between France, a key U.S. partner and ally, and the United States.

2. Provide French teachers in training, especially those who plan to teach in diverse schools, a better understanding of U.S. society, history, and culture.

3. Provide opportunities for students in French schools to learn first hand about U.S. society, history and culture from young American future teachers.

4. Expose U.S. student teachers to greater understanding of another culture and society.

5. Provide opportunities for schools in France and in the United States to develop long-lasting ties and to share educational best practices, including strategies for teaching in multi-cultural classrooms.

In the long-term, this program is expected to assist French and American educators as they prepare students to live in an increasingly interdependent world.

I.2b. French participants: French participants will be in their final year of post-baccalaureate training at one of six schools of education (*Instituts Universitaires de Formation de Maitres*): Orléans-Tours, Champagne-Ardenne, Paris, Midi-Pyrénées, Versailles, and Alsace. They will be in their first year of practice teaching and will be expected to pass their final practical examination in France in early June 2007. It is anticipated that all participants, early in their careers, will teach in schools that serve economically disadvantaged and/or diverse socio-economic sectors. The French Ministry of Education and the U.S. Embassy in France, with support from the Fulbright Commission, will recruit and select these students.

I.2c. U.S. participants: U.S. participants will be education students at the undergraduate or graduate level who are ready to begin student teaching. The cooperating institution will recruit and select U.S. participants in coordination with the Fulbright Teacher Exchange Branch, the U.S. Embassy in France and the French Ministry of Education. The French partners will organize an orientation in France with input from the cooperating institution and will place participants in teaching internships in French schools. Participants will teach in or conduct outreach activities in a variety of schools, including those in ''priority education areas,'' which are defined in terms of socio-economic backgrounds. Most U.S. participants will student teach in schools where U.S. history, geography and related subjects are taught and where English is used in the classroom. While fluency in French is not required, those teachers with some facility in the French language will be given preference. U.S. participants must reflect the diversity of American society (including, but not limited to geographic, gender, racial, ethnic, and socio-economic diversity).

I.2d. Guidelines:

The cooperating institution should conduct a short planning visit to France to consult with representatives from the U.S. Embassy, the French Ministry of Education, the Fulbright Commission, and local educators. Based on assessments made during this planning visit, the cooperating institution will develop a detailed schedule and curriculum for the U.S.-based program and will discuss with French partners the development of the program for U.S. participants. The cooperating institution, in collaboration with the Ministry of Education, should develop a process to assist French participants in receiving official recognition for their exchange, as well as a process for American participants to receive academic credit through the U.S. host institution.

I.2e. Program components for French participants:

- Pre-departure orientation (2–4 days): The U.S. Embassy in France, in collaboration with the Fulbright Commission, will organize an orientation with substantial input and participation from the cooperating institution. The orientation will provide information about the program, the program's goals, and expectations of participants. At the orientation, organizers will seek input from the participants about the needs of local teachers, review comparative teaching practices, and address issues about participants' stay in the U.S.
- U.S.-based seminar (3–4 weeks or the equivalent): The cooperating institution should design and conduct an academically sound seminar on U.S. history, culture and society to complement the school-based training. The seminar should have a strong contemporary focus and provide an introduction to the U.S. education system, American culture, including a cross-cultural adjustment seminar, and the U.S. government as it relates to education. It should include a basic introduction to American life and customs, particularly common practices in U.S. schools and efforts to eliminate educational inequity. While U.S. teaching methodology should not be the primary focus of this component, participants should be exposed to current issues in the U.S. including: federalism, diversity, the role of religion, politics, U.S. history, mass media, economics, literature, and fine arts.
- Site visits to schools (2–3 days or the equivalent): School visits should expose participants to different levels and types of schools (public, private,

charter, rural, inner city, ethnically and socio-economically diverse).

• Internships in high schools (maximum 8 weeks): French teachers should be placed in small groups (5–10 people) at local schools, paired with experienced U.S. teachers whose academic specialization matches their own. Internship activities should immerse student teachers actively in the American classroom environment and may include: observing a variety of classroom activities (active classroom, group projects, etc.); working individually with a mentor teacher on curriculum development; and team teaching. French teachers must spend at least six hours per week conducting classes independently.

• Exposure to local school governance: Teachers should attend faculty, board of education, and PTA meetings.

• Final debriefing (1–2 days): Student teachers will share what they have observed and learned, perhaps through presentations they make to each other within the group. The debriefing will also offer a framework for integrating the training and its objectives into participants' previous background, and promote strategies for them to share their knowledge with professional counterparts and their own students on their return.

• Curriculum development project: By the end of the program, the student teachers should complete a project incorporating an idea or concept that they will put into practice when they begin teaching.

• Cultural experiences: The project should provide opportunities for participants to interact with the local community and non-school-based groups, including home stays, to experience activities reflecting the diversity of American society, and to make presentations to local schools or community groups about French society and culture.

• Washington program (2–3 days): The participants should travel to Washington for a professional and cultural program to include meetings with the Bureau of Educational and Cultural Affairs, the French Embassy, and Department of Education representatives.

I.2.f. Cooperating institution's responsibilities for French student teachers:

• Plan and implement the exchange program, including both the academic and practical components.

• Identify school districts to host groups for internships (schools should submit a brief proposal outlining their interest, understanding of goals, examples of best practices, and commitment to mentoring). School districts should be within driving distance of the host university (and/or its partner universities). Schools should designate an experienced mentor teacher to oversee the day-to-day activities of the participants.

• Assist with pre-departure orientation in France, conduct debriefing.

• Prepare DS–2019 forms.

• Administer logistics for French participants: transportation to local schools and training sites, enrollment in Bureau health insurance program, U.S. government forms—DS–2019, tax, social security, etc.

• Arrange for housing, which should include a home stay for at least some portion of the exchange visit;

I.2g. Cooperating institution's responsibilities for U.S. student teachers:

• Selection: Design application forms and publicity materials, recruit, and select U.S. participants in coordination with the Office of Global Educational Programs.

• Pre-departure orientation (two to three days): Provide introduction to French society and culture, including diversity issues, government and education system and a cross-cultural adjustment seminar. Establish guidelines and expectations for U.S. participants.

• Short-term language training in the U.S. (three to four weeks or equivalent): Depending on the language level of U.S. participants, provide an introduction to French vocabulary related to schools and education. Training may be conducted using distance education technology.

• Travel of U.S. participants: Purchase airline tickets and enrollment in Bureau health insurance for U.S. grantees.

I.2.h. General Responsibilities:

• Coordinate with various partners, including the U.S. Embassy in France, the French Ministry of Education, the Fulbright Commission, and the Fulbright Teacher Exchange Branch in the Bureau of Educational and Cultural Affairs regarding all activities, reporting and evaluation. The proposal should address mechanisms for communication and coordination;

• Monitor and evaluate the program;

• Administer all financial aspects of the program and comply with reporting requirements;

• Plan follow-on activities with host schools and participants.

Please note that international tickets for French participants will be arranged and funded by the French Ministry of Education. French participants will receive a stipend from the French Ministry of Education and will be responsible for their own meals and incidental expenses.

A strong proposal will address follow-on activities in conjunction with the Fulbright Commission and host schools in the United States and France to increase future impact and participant support.

The agreement will begin on, or about, September 1, 2006 and the cooperating institution should complete all exchange activities by June 30, 2008. The program for French teachers should be from January to March 2007. The U.S. group may be planned for spring or fall 2007. Please refer to additional program specific guidelines in the Project Objectives, Goals, and Implementation (POGI) document. Programs must comply with J–1 visa regulations. Please refer to the Solicitation Package for further information.

In a cooperative agreement, ECA/A/S/X will be substantially involved in the program activities mentioned above and beyond routine grant monitoring. ECA/A/S/X activities and responsibilities for this program are as follows:

• Formulation of program policy;

• Clearing texts and program guidelines for publication;

• In cooperation with U.S. Embassy and Fulbright Commission, oversee selection of U.S. participants;

• Oversight of the content for all orientations as well as review and approval of program schedules;

II. Award Information

Type of Award: New Cooperative Agreement. ECA's level of involvement in this program is listed under number I above.

Fiscal Year Funds: FY 06.

Approximate Total Funding: $350,000.

Approximate Number of Awards: 1.

Approximate Average Award: Pending availability of funds, $350,000.

Anticipated Award Date: September 1, 2006.

Anticipated Project Completion Date: June 30, 2008.

Additional Information: Pending successful implementation of this program and the availability of funds in subsequent fiscal years, it is ECA's intent to renew this agreement for two additional fiscal years, before openly competing it again.

III. Eligibility Information

III.1. Eligible Applicants

Applications may be submitted by accredited, post-secondary educational

institutions meeting the provisions described in Internal Revenue Code section 26 U.S.C. 501(c)(3).

III.2. Cost Sharing or Matching Funds

There is no minimum or maximum percentage required for this competition. However, the Bureau encourages applicants to provide maximum levels of cost sharing and funding in support of its programs.

When cost sharing is offered, it is understood and agreed that the applicant must provide the amount of cost sharing as stipulated in its proposal and later included in an approved grant agreement. Cost sharing may be in the form of allowable direct or indirect costs. For accountability, you must maintain written records to support all costs which are claimed as your contribution, as well as costs to be paid by the Federal government. Such records are subject to audit. The basis for determining the value of cash and in-kind contributions must be in accordance with OMB Circular A–110, (Revised), Subpart C.23—Cost Sharing and Matching. In the event you do not provide the minimum amount of cost sharing as stipulated in the approved budget, ECA's contribution will be reduced in like proportion.

III.3. Other Eligibility Requirements

(a) Bureau grant guidelines require that organizations with less than four years experience in conducting international exchanges be limited to $60,000 in Bureau funding. ECA anticipates awarding one grant, in an amount up to $350,000 to support program and administrative costs required to implement this exchange program. Therefore, organizations with less than four years experience in conducting international exchanges are ineligible to apply under this competition. The Bureau encourages applicants to provide maximum levels of cost sharing and funding in support of its programs.

IV. Application and Submission Information

Note: Please read the complete announcement before sending inquiries or submitting proposals. Once the RFGP deadline has passed, Bureau staff may not discuss this competition with applicants until the proposal review process has been completed.

IV.1. Contact Information To Request an Application Package

Please contact the Office of Global Educational Programs, ECA/A/S/X, Room 349, U.S. Department of State, SA–44, 301 4th Street, SW., Washington, DC 20547, tel. (202) 453–8897, fax (202) 453–8890, or e-mail *Mosleypj@state.gov* to request a Solicitation Package. Please refer to the Funding Opportunity Number ECA/A/S/X 06–12 located at the top of this announcement when making your request. Alternatively, an electronic application package may be obtained from grants.gov. Please see section IV.3f for further information.

The Solicitation Package contains the Proposal Submission Instruction (PSI) document which consists of required application forms, and standard guidelines for proposal preparation.

It also contains the Project Objectives, Goals and Implementation (POGI) document, which provides specific information, award criteria and budget instructions tailored to this competition.

Please specify ECA/A/S/X Program Officer Catharine Cashner and refer to the Funding Opportunity Number (ECA/A/S/X 06–12) located at the top of this announcement on all other inquiries and correspondence.

IV.2. To Download a Solicitation Package Via Internet

The entire Solicitation Package may be downloaded from the Bureau's Web site at *http://exchanges.state.gov/education/rfgps/menu.htm*, or from the Grants.gov Web site at *http://www.grants.gov*.

Please read all information before downloading.

IV.3. Content and Form of Submission

Applicants must follow all instructions in the Solicitation Package. The application should be submitted per the instructions under IV.3f. ''Application Deadline and Methods of Submission'' section below.

IV.3a. You are required to have a Dun and Bradstreet Data Universal Numbering System (DUNS) number to apply for a grant or cooperative agreement from the U.S. Government. This number is a nine-digit identification number, which uniquely identifies business entities. Obtaining a DUNS number is easy and there is no charge. To obtain a DUNS number, access *http://www.dunandbradstreet.com* or call 1–866–705–5711. Please ensure that your DUNS number is included in the appropriate box of the SF–424 which is part of the formal application package.

IV.3b. All proposals must contain an executive summary, proposal narrative and budget.

Please refer to the Solicitation Package. It contains the mandatory Proposal Submission Instructions (PSI) document and the Project Objectives, Goals and Implementation (POGI) document for additional formatting and technical requirements.

IV.3c. You must have nonprofit status with the IRS at the time of application. If your organization is a private nonprofit which has not received a grant or cooperative agreement from ECA in the past three years, or if your organization received nonprofit status from the IRS within the past four years, you must submit the necessary documentation to verify nonprofit status as directed in the PSI document. Failure to do so will cause your proposal to be declared technically ineligible.

IV.3d. Please take into consideration the following information when preparing your proposal narrative:

IV.3d.1. Adherence to All Regulations Governing the J Visa

The Bureau of Educational and Cultural Affairs is placing renewed emphasis on the secure and proper administration of Exchange Visitor (J visa) Programs and adherence by grantees and sponsors to all regulations governing the J visa. Therefore, proposals should demonstrate the applicant's capacity to meet all requirements governing the administration of the Exchange Visitor Programs as set forth in 22 CFR 62, including the oversight of Responsible Officers and Alternate Responsible Officers, screening and selection of program participants, provision of pre-arrival information and orientation to participants, monitoring of participants, proper maintenance and security of forms, record-keeping, reporting and other requirements. The Grantee will be responsible for issuing DS–2019 forms to participants in this program.

A copy of the complete regulations governing the administration of Exchange Visitor (J) programs is available at *http://exchanges.state.gov* or from: United States Department of State, Office of Exchange Coordination and Designation, ECA/EC/ECD—SA–44, Room 734, 301 4th Street, SW., Washington, DC 20547. Telephone: (202) 203–5029. FAX: (202) 453–8640.

Please refer to Solicitation Package for further information.

IV.3d.2. Diversity, Freedom and Democracy Guidelines

Pursuant to the Bureau's authorizing legislation, programs must maintain a non-political character and should be balanced and representative of the diversity of American political, social, and cultural life. ''Diversity'' should be interpreted in the broadest sense and encompass differences including, but not limited to ethnicity, race, gender,

religion, geographic location, socio-economic status, and disabilities. Applicants are strongly encouraged to adhere to the advancement of this principle both in program administration and in program content.

Please refer to the review criteria under the ''Support for Diversity'' section for specific suggestions on incorporating diversity into your proposal. Public Law 104–319 provides that ''in carrying out programs of educational and cultural exchange in countries whose people do not fully enjoy freedom and democracy,'' the Bureau ''shall take appropriate steps to provide opportunities for participation in such programs to human rights and democracy leaders of such countries.'' Public Law 106–113 requires that the governments of the countries described above do not have inappropriate influence in the selection process. Proposals should reflect advancement of these goals in their program contents, to the full extent deemed feasible.

IV.3d.3. Program Monitoring and Evaluation

Proposals must include a plan to monitor and evaluate the project's success, both as the activities unfold and at the end of the program. The Bureau recommends that your proposal include a draft survey questionnaire or other technique plus a description of a methodology to use to link outcomes to original project objectives. The Bureau expects that the grantee will track participants or partners and be able to respond to key evaluation questions, including satisfaction with the program, learning as a result of the program, changes in behavior as a result of the program, and effects of the program on institutions (institutions in which participants work or partner institutions). The evaluation plan should include indicators that measure gains in mutual understanding as well as substantive knowledge.

Successful monitoring and evaluation depend heavily on setting clear goals and outcomes at the outset of a program. Your evaluation plan should include a description of your project's objectives, your anticipated project outcomes, and how and when you intend to measure these outcomes (performance indicators). The more that outcomes are ''smart'' (specific, measurable, attainable, results-oriented, and placed in a reasonable time frame), the easier it will be to conduct the evaluation. You should also show how your project objectives link to the goals of the program described in this RFGP.

Your monitoring and evaluation plan should clearly distinguish between program *outputs* and *outcomes. Outputs* are products and services delivered, often stated as an amount. Output information is important to show the scope or size of project activities, but it cannot substitute for information about progress towards outcomes or the results achieved. Examples of outputs include the number of people trained or the number of seminars conducted. *Outcomes*, in contrast, represent specific results a project is intended to achieve and is usually measured as an extent of change. Findings on outputs and outcomes should both be reported, but the focus should be on outcomes.

We encourage you to assess the following four levels of outcomes, as they relate to the program goals set out in the RFGP (listed here in increasing order of importance):

1. *Participant satisfaction* with the program and exchange experience.
2. *Participant learning*, such as increased knowledge, aptitude, skills, and changed understanding and attitude. Learning includes both substantive (subject-specific) learning and mutual understanding.
3. *Participant behavior*, concrete actions to apply knowledge in work or community; greater participation and responsibility in civic organizations; interpretation and explanation of experiences and new knowledge gained; continued contacts between participants, community members, and others.
4. *Institutional changes*, such as increased collaboration and partnerships, policy reforms, new programming, and organizational improvements.

Please note: Consideration should be given to the appropriate timing of data collection for each level of outcome. For example, satisfaction is usually captured as a short-term outcome, whereas behavior and institutional changes are normally considered longer-term outcomes.

Overall, the quality of your monitoring and evaluation plan will be judged on how well it (1) Specifies intended outcomes; (2) gives clear descriptions of how each outcome will be measured; (3) identifies when particular outcomes will be measured; and (4) provides a clear description of the data collection strategies for each outcome (*i.e.*, surveys, interviews, or focus groups). (Please note that evaluation plans that deal only with the first level of outcomes [satisfaction] will be deemed less competitive under the present evaluation criteria.)

Grantees will be required to provide reports analyzing their evaluation findings to the Bureau in their regular program reports. All data collected, including survey responses and contact information, must be maintained for a minimum of three years and provided to the Bureau upon request.

IV.3d.4. Describe your plans for overall program management, staffing, and coordination with ECA/A/S/X. ECA/A/S/X considers program management, staffing and coordination with the Department of State essential elements of your program. Please be sure to give sufficient attention to these elements in your proposal. Please refer to the Technical Eligibility Requirements and the POGI in the Solicitation package for specific guidelines. Describe your plans for: *i.e.* sustainability, overall program management, staffing, coordination with ECA and PAS or any other requirements etc.

IV.3e. Please take the following information into consideration when preparing your budget:

IV.3e.1. Applicants must submit a comprehensive budget for the entire program. The budget should not exceed $350,000 for program and administrative costs. There must be a summary budget as well as breakdowns reflecting both administrative and program budgets. Applicants may provide separate sub-budgets for each program component, phase, location, or activity to provide clarification.

IV.3e.2. Allowable costs for the program include the following:

(1) International Travel.
(2) Costs for U.S. Competition.
(3) U.S. Ground Transportation.
(4) Orientation and Professional Development Seminar (instruction, materials, logistics).
(5) Host schools (administrative costs).
(6) Participant lodging and per diem.
(7) Cultural Activities.
(8) Book Allowance/Shipping.
(9) Grantee Administrative Costs.

Please refer to the Solicitation Package for complete budget guidelines and formatting instructions.

IV.3f. Application Deadline and Methods of Submission

Application Deadline Date: May 31, 2006.

Reference No: ECA/A/S/X–06–12.

Explanation of Deadlines:

IV.3f.1. Applications may be submitted in one of two ways

1. *In hard-copy*, via a nationally recognized overnight delivery service (*i.e.*, DHL, Federal Express, UPS, Airborne Express, or U.S. Postal Service Express Overnight Mail, etc.), or
2. *Electronically* through *http://www.grants.gov*.

Along with the Project Title, all applicants must enter the above Reference Number in Box 11 on the SF–424 contained in the mandatory Proposal Submission Instructions (PSI) of the solicitation document.

IV.3f.2. Submitting Printed Applications

Applications must be shipped no later than the above deadline. Delivery services used by applicants must have in-place, centralized shipping identification and tracking systems that may be accessed via the Internet and delivery people who are identifiable by commonly recognized uniforms and delivery vehicles. Proposals shipped on or before the above deadline but received at ECA more than seven days after the deadline will be ineligible for further consideration under this competition. Proposals shipped after the established deadlines are ineligible for consideration under this competition. ECA will *not* notify you upon receipt of application. It is each applicant's responsibility to ensure that each package is marked with a legible tracking number and to monitor/confirm delivery to ECA via the Internet. Delivery of proposal packages *may not* be made via local courier service or in person for this competition. Faxed documents will not be accepted at any time. Only proposals submitted as stated above will be considered.

Important note: When preparing your submission please make sure to include one extra copy of the completed SF–424 form and place it in an envelope addressed to ''ECA/EX/PM''.

The original and eight copies of the application should be sent to: U.S. Department of State, SA–44, Bureau of Educational and Cultural Affairs, Ref.: ECA/A/S/X–06–04, Program Management, ECA/EX/PM, Room 534, 301 4th Street, SW., Washington, DC 20547.

Applicants submitting hard-copy applications must also submit the ''Executive Summary'' and ''Proposal Narrative'' sections of the proposal in text (.txt) format on a PC-formatted disk. The Bureau will provide these files electronically to the appropriate Public Affairs Sections at the U.S. embassies for their review.

IV.3f.2. Submitting Electronic Applications

Applicants have the option of submitting proposals electronically through Grants.gov (*http://www.grants.gov*). Complete solicitation packages are available at Grants.gov in the ''Find'' portion of the system. Please follow the instructions available in the 'Get Started' portion of the site (*http://www.grants.gov/GetStarted*).

Applicants have until midnight (12 a.m.) of the closing date to ensure that their entire application has been uploaded to the grants.gov site. Applications uploaded to the site after midnight of the application deadline date will be automatically rejected by the grants.gov system, and will be technically ineligible.

Applicants will receive confirmation e-mail from grants.gov upon the successful submission of an application. ECA will *not* notify you upon receipt of electronic applications.

IV.3g. Intergovernmental Review of Applications

Executive Order 12372 does not apply to this program.

V. Application Review Information

V.1. Review Process

The Bureau will review all proposals for technical eligibility. Proposals will be deemed ineligible if they do not fully adhere to the guidelines stated herein and in the Solicitation Package. All eligible proposals will be reviewed by the program office, as well as the Public Diplomacy section overseas, where appropriate. Eligible proposals will be subject to compliance with Federal and Bureau regulations and guidelines and forwarded to Bureau grant panels for advisory review. Proposals may also be reviewed by the Office of the Legal Adviser or by other Department elements. Final funding decisions are at the discretion of the Department of State's Assistant Secretary for Educational and Cultural Affairs. Final technical authority for assistance awards resides with the Bureau's Grants Officer.

Review Criteria

Technically eligible applications will be competitively reviewed according to the criteria stated below. These criteria are not rank ordered and all carry equal weight in the proposal evaluation:

1. *Program planning:* Detailed agenda and relevant work plan should demonstrate substantive expertise in professional development for student teachers and logistical capacity. The agenda and plan should illustrate effective use of community and regional resources to enhance participants' educational and cultural experiences.

2. *Ability to achieve program objectives:* Objectives should be reasonable, feasible, and flexible. Proposals should clearly demonstrate how the institution will meet the program's objectives and plan.

3. *Multiplier effect/impact:* Proposed programs should strengthen long-term mutual understanding, including maximum sharing of information and establishment of long-term institutional and individual linkages between U.S. and French schools.

4. *Support of Diversity:* Proposals should demonstrate substantive support of the Bureau's policy on diversity. Achievable and relevant features should be cited in both program administration (selection of participants, program venue and program evaluation) and program content (orientation and wrap-up sessions, program meetings, resource materials and follow-up activities) both in the United States and in France.

5. *Institutional Capacity:* Proposed personnel and institutional resources should be adequate and appropriate to achieve the program or project's goals.

6. *Institution's Record/Ability:* Proposals should demonstrate an institutional record of successful exchange programs, including responsible fiscal management and full compliance with all reporting requirements for past Bureau grants as determined by Bureau Grants Staff. The Bureau will consider the past performance of prior recipients and the demonstrated potential of new applicants.

7. *Follow-on Activities:* Proposals should provide a plan for continued follow-on activity ensuring that Bureau supported programs are not isolated events.

8. *Project Evaluation:* Proposals should include a plan to evaluate the activity's success, both as the activities unfold and at the end of the program. A draft survey questionnaire or other technique plus description of a methodology to use to link outcomes to original project objectives is recommended.

9. *Cost-effectiveness/cost sharing:* The overhead and administrative components of the proposal, including salaries and honoraria, should be kept as low as possible. All other items should be necessary and appropriate.

Proposals should maximize cost-sharing through other private sector support, as well as institutional direct funding contributions.

VI. Award Administration Information

VI.1.a. Award Notices

Final awards cannot be made until funds have been appropriated by Congress, allocated and committed through internal Bureau procedures. Successful applicants will receive an Assistance Award Document (AAD) from the Bureau's Grants Office. The

AAD and the original grant proposal with subsequent modifications (if applicable) shall be the only binding authorizing document between the recipient and the U.S. Government. The AAD will be signed by an authorized Grants Officer, and mailed to the recipient's responsible officer identified in the application.

Unsuccessful applicants will receive notification of the results of the application review from the ECA program office coordinating this competition.

VI.2. Administrative and National Policy Requirements

Terms and Conditions for the Administration of ECA agreements include the following:

Office of Management and Budget Circular A–122, ''Cost Principles for Nonprofit Organizations.''

Office of Management and Budget Circular A–21, ''Cost Principles for Educational Institutions.''

OMB Circular A–87, ''Cost Principles for State, Local and Indian Governments''.

OMB Circular No. A–110 (Revised), Uniform Administrative Requirements for Grants and Agreements with Institutions of Higher Education, Hospitals, and other Nonprofit Organizations.

OMB Circular No. A–102, Uniform Administrative Requirements for Grants-in-Aid to State and Local Governments.

OMB Circular No. A–133, Audits of States, Local Government, and Non-profit Organizations.

Please reference the following Web sites for additional information: *http://www.whitehouse.gov/omb/grants. http://exchanges.state.gov/education/grantsdiv/terms.htm#articleI.*

VI.3. Reporting Requirements

You must provide ECA with a hard copy original plus one copy of the following reports:

(1) A final program and financial report no more than 90 days after the expiration of the award;

(2) Annual program report for the first year of the agreement.

Grantees will be required to provide reports analyzing their evaluation findings to the Bureau in their regular program reports. (Please refer to IV. Application and Submission Instructions (IV.3.d.3) above for Program Monitoring and Evaluation information.

All data collected, including survey responses and contact information, must be maintained for a minimum of three years and provided to the Bureau upon request.

All reports must be sent to the ECA Grants Officer and ECA Program Officer listed in the final assistance award document.

VI.4. Optional Program Data Requirements

Organizations awarded grants will be required to maintain specific data on program participants and activities in an electronically accessible database format that can be shared with the Bureau as required. As a minimum, the data must include the following:

(1) Name, address, contact information and biographic sketch of all persons who travel internationally on funds provided by the grant or who benefit from the grant funding but do not travel.

(2) Itineraries of international and domestic travel, providing dates of travel and cities in which any exchange experiences take place. Final schedules for in-country and U.S. activities must be received by the ECA Program Officer at least three work days prior to the official opening of the activity.

VII. Agency Contacts

For questions about this announcement, contact: Catharine Cashner, ECA/A/S/X, Room 349, ECA/A/S/X 06–12, U.S. Department of State, SA–44, 301 4th Street, SW., Washington, DC 20547, tel. (202) 453–8880, fax (202)453–8890.

All correspondence with the Bureau concerning this RFGP should reference the above title and number ECA/A/S/X 06–12.

Please read the complete **Federal Register** announcement before sending inquiries or submitting proposals. Once the RFGP deadline has passed, Bureau staff may not discuss this competition with applicants until the proposal review process has been completed.

VIII. Other Information

Notice

The terms and conditions published in this RFGP are binding and may not be modified by any Bureau representative. Explanatory information provided by the Bureau that contradicts published language will not be binding. Issuance of the RFGP does not constitute an award commitment on the part of the Government. The Bureau reserves the right to reduce, revise, or increase proposal budgets in accordance with the needs of the program and the availability of funds. Awards made will be subject to periodic reporting and evaluation requirements per section VI.3 above.

Dated: April 21, 2006.

C. Miller Crouch,

Principal Deputy Assistant Secretary, Bureau of Educational and Cultural Affairs, Department of State.

[FR Doc. E6–6357 Filed 4–26–06; 8:45 am]

BILLING CODE 4710–05–P

DEPARTMENT OF TRANSPORTATION

Office of the Secretary

Aviation Proceedings, Agreements Filed the Week Ending March 31, 2006

The following Agreements were filed with the Department of Transportation under the sections 412 and 414 of the Federal Aviation Act, as amended (49 U.S.C. 1382 and 1384) and procedures governing proceedings to enforce these provisions. Answers may be filed within 21 days after the filing of the application.

Docket Number: OST–2006–24303.
Date Filed: March 28, 2006.
Parties: Members of the International Air Transport Association.
Subject:
TC12 North Atlantic-Africa except between USA and Reunion. Memo 0235 dated 23 February 2006.
Minutes: TC12 North/Mid/South Atlantic-Africa. Memo 0240 dated 3 March 2006.
Fares: TC12 North Atlantic-Africa. Specified fare table. Memo 0112 dated 28 February 2006.
Technical Correction: TC12 North Atlantic-Africa except between USA and Reunion. Memo 0239 dated 3 March 2006.
Intended effective date: 1 May 2006.

Docket Number: OST–2006–24308.
Date Filed: March 28, 2006.
Parties: Members of the International Air Transport Association.
Subject:
TC12 North Atlantic-Africa between USA and Reunion. Memo 0236 dated 23 February 2006.
Minutes: TC12 North/Mid/South Atlantic-Africa. Memo 0240 dated 3 March 2006.
Fares: TC12 North Atlantic-Africa. Specified fare table. Memo 0112 dated 28 February 2006.
Intended effective date: 1 May 2006.

Docket Number: OST–2006–24311.
Date Filed: March 29, 2006.
Parties Members of the International Air Transport Association.
Subject: TC12 Mid Atlantic-Africa. Memo 0237 dated 23 February 2006.
Minutes: TC12 North/Mid/South Atlantic-Africa. Memo 0240 dated 3 March 2006.

Fares: TC12 Mid Atlantic-Africa. Specified fare table. Memo 0111 dated 28 February 2006.
Intended effective date: 1 May 2006.

Docket Number: OST–2006–24312.
Date Filed: March 29, 2006.
Parties: Members of the International Air Transport Association.
Subject:
TC12 South Atlantic-Africa. Memo 0238 dated 23 February 2006.
Minutes: TC12 North/Mid/South Atlantic-Africa. Memo 0240 dated 3 March 2006.
Fares: TC12 South Atlantic-Africa. Specified fare table. Memo 0110 dated 28 February 2006. *Intended effective date:* 1 May 2006.

Docket Number: OST–2006–24313.
Date Filed: March 29, 2006.

Parties: Members of the International Air Transport Association.
Subject:
TC3 South East Asia-South West Pacific between Malaysia and American Samoa. Singapore, 21 November–30 November 2005.
Intended effective date: 1 April 2006 (Memo 0924).
Minutes: TC3 South East Asia-South West Pacific between Malaysia and American Samoa. Singapore, 21 November–30 November 2005 (Memo 0943).
Fares: TC3 South East Asia-South West Pacific between Malaysia and American Samoa. Singapore, 21 November–30 November 2005. Specified fare tables.
Intended effective date: 1 April 2006 (Memo 0383).

Docket Number: OST–2006–24339.
Date Filed: March 30, 2006.
Parties: Members of the International Air Transport Association.
Subject
TC2 Passenger Tariff Coordinating Conferences. TC2 Europe-Africa Resolutions. Memo PTC2 EUR–AFR 0234 dated 24 February 2006.
Minutes: TC2 Within Africa, Europe-Africa, and Middle East-Africa Minutes Memo 0235.
Tables: PTC2 EUR–AFR Fares 0134 dated 27 February 2006.
Technical Correction: TC2 Europe-Africa Resolutions Memo PTC2 EUR–AFR 0236 dated 9 March 2006 Geneva, 20–23 February 2006. Intended effective date: 1 May 2006.

Docket Number: OST–2006–24341.
Date Filed: March 30, 2006.
Parties: Members of the International Air Transport Association.
Subject
Tables: PTC12 USA–EUR Fares 0104 dated 29 March 2006. Resolution 015h–USA Add-Ons between USA and UK.
Intended effective date: 1 April 2006.

Renee V. Wright,
Program Manager, Docket Operations, Federal Register Liaison.
[FR Doc. E6–6346 Filed 4–26–06; 8:45 am]
BILLING CODE 4910–9X–P

DEPARTMENT OF TRANSPORTATION

Office of the Secretary

Notice of Applications for Certificates of Public Convenience and Necessity and Foreign Air Carrier Permits Filed Under Subpart B (Formerly Subpart Q) During the Week Ending March 31, 2006

The following Applications for Certificates of Public Convenience and Necessity and Foreign Air Carrier. Permits were filed under Subpart B (formerly Subpart Q) of the Department of Transportation's Procedural Regulations (*See* 14 CFR 301.201 *et. seq.*). The due date for Answers, Conforming Applications, or Motions to Modify Scope are set forth below for each application. Following the Answer period DOT may process the application by expedited procedures. Such procedures may consist of the adoption of a show-cause order, a tentative order, or in appropriate cases a final order without further proceedings.

Docket Number: OST–2006–24295.
Date Filed: March 27, 2006.
*Due Date for Answers, Conforming Applications, or Motion to Modify Scope:*April 17, 2006.
Description: Application of Independence Air, Inc. (''Independence Air'') and Compass Airlines, Inc. (''Compass'') requesting the transfer to Compass the certificate of public convenience and necessity issued to Independence Air by Order 2004–11–19 authorizing Independence Air to engage in interstate scheduled air transportation of persons, property and mail.

Docket Number: OST–2006–24296.
Date Filed: March 27, 2006.
Due Date for Answers, Conforming Applications, or Motion to Modify Scope: April 17, 2006.
Description: Application of Era Aviation, Inc. (''Applicant'') registering the elimination of the use of certain business names under which the Applicant desires to conduct its operations, and reissuance of its underlying certificate of public convenience and necessity in the single remaining corporate name, Era Aviation, Inc.

Docket Number: OST–1999–5846.
Date Filed: March 29, 2006.
Due Date for Answers, Conforming Applications, or Motion to Modify Scope: April 19, 2006.
Description: Supplement No. 4 of United Air Lines, Inc. to its pending application for renewal and amendment of its experimental certificate of public convenience and necessity for Route 566 (U.S.-Mexico) to include authority to carry persons, property and mail in foreign air transportation in foreign air transportation between Los Angeles and Cancun and between Chicago and Puerto Vallarta.

Renee V. Wright,
Program Manager, Docket Operations, Federal Register Liaison.
[FR Doc. E6–6347 Filed 4–26–06; 8:45 am]
BILLING CODE 4910–9X–P

DEPARTMENT OF TRANSPORTATION

Federal Aviation Administration

Notice of Submission Deadline for International Slots for the Winter 2006 Scheduling Season

AGENCY: Department of Transportation, FAA.

ACTION: notice of submission deadline.

SUMMARY: On October 1, 1999, the FAA amended the regulations governing takeoff and landing slots and slot allocation procedures at certain High Density Traffic Airports as a result of the ''Open Transborder'' Agreement between the Government of the United States and the Government of Canada. One element of this final rule established that the deadline for submission of requests for international slots will be published in a **Federal Register** notice for each scheduling season. The purpose of the amendment is for the FAA deadline for international slots requests to coincide with the International Air Transport Association (IATA) deadline for submission of slot requests.

In accordance with this amendment, the FAA announces in this notice that the deadline for submitting requests for international slots at John F. Kennedy International Airport (JFK) for allocation under 14 CFR 93.217 is May 11, 2006. The FAA will allocate international slots through December 31, 2006 only, as the High Density Rule expires at JFK on December 31, 2006. (*See* 49 U.S.C. 41715(a)(2).) After that date, slots will no longer be required for operation at JFK.

The FAA has designated Chicago's O'Hare International Airport (O'Hare) as

a Level 2, Schedules Facilitated Airport under the IATA Guidelines and will review international operations based on runway parameters. The FAA requests carriers intending to conduct international service at O'Hare for the Winter 2006/07 Scheduling Season to submit their intended schedules following the same procedures used for submitting requests for slots at JFK. Carriers are advised that this notice does not alter or change any coordination procedures conducted by the City of Chicago for O'Hare's Terminal 5 facilities.

Finally, the U.S. scheduling season is consistent with the changes in daylight savings time. In accordance with the Energy Policy Act of 2005 (Pub. L. 109–58), daylight savings time will begin on March 11, 2007 and end on November 3, 2007. The IATA Northern Winter Scheduling Season will end on March 24, 2007, and its Summer Scheduling Season will only begin on March 25, 2007. There is a two-week period for which the IATA Winter scheduling season will overlap with the U.S. summer scheduling season. We recognize this transition period will cause some carriers to adjust scheduled times based on their network requirements and other considerations. For O'Hare, the FAA will accept carriers' schedule requests for the entire IATA Northern Winter Scheduling Season (ending on March 24, 2007), even though that will be the first two weeks of the U.S. summer scheduling season. This will facilitate carriers seeking to confirm schedules at other worldwide slot coordinated airports in accordance with the IATA season and coordination process. Carriers should clearly indicate any schedule differences during the March 11 to 24, 2007, period. The FAA intends to provide the maximum practical flexibility to accommodate schedule adjustments during this period and does not anticipate any significant issues regarding historic rights due to the earlier introduction of daylight saving time in the U.S. A deadline for submitting the reamining summer schedules for 2007 will by announced in the **Federal Register** by September 2006.

The Department of Transportation reserves the right to withhold the approval of schedules to any foreign air carrier of a country that does not provide equivalent rights of access to its airports for U.S. air carriers, as determined by the Secretary of Transportation.

DATES: Requests for international slots must be submitted no later than May 11, 2006.

ADDRESSES: Requests may be submitted by mail to Slot Administration Office, AGC–220 Office of the Chief Counsel, 800 Independence Ave., SW., Washington, DC 20591; facsimile: 202–267–7277; ARINC: DCAYAXD; or by e-mail to: *7-AWA-slotadmin@faa.gov.*

FOR FURTHER INFORMATION CONTACT: Lorelei Peter, Regulations Division, Office of the Chief Counsel, Federal Aviation Administration, 800 Independence Avenue, SW., Washington, DC 20591; telephone number: 202–267–3073.

Issued in Washington, DC on April 24, 2006.

James Whitlow,

Deputy Chief Counsel.

[FR Doc. 06–3991 Filed 4–26–06; 8:45 am]

BILLING CODE 4910–13–M

DEPARTMENT OF TRANSPORTATION

Federal Aviation Administration

[Docket No. FAA–2006–24508]

Draft General Conformity Determination for Proposed Operations of Southwest Airlines Co. at Denver International Airport, Denver, CO

AGENCY: Federal Aviation Administration (FAA), Department of Transportation (DOT).

ACTION: Notice of Draft General Conformity Determination.

SUMMARY: The FAA is issuing this notice to advise the public that a Draft General Conformity Determination (DGCD) for Proposed Operations of Southwest Airlines Co. (Southwest) at Denver International Airport (DEN) has been prepared. In accordance with Section 176(c) of the Clean Air Act, FAA has assessed whether the emissions that would result from FAA's action in approving the proposed operation specifications (OpSpec) for Southwest's proposed operations at DEN conform with the Colorado State Implementation Plan (SIP).

DATES: Submit comments on or before May 30, 2006.

ADDRESSES: You may submit comments, identified by docket no. FAA–2006–24508 by any of the following methods:

- DOT docket Web site: Go to *http://dms.dot.gov* and follow the instructions for sending your comments electronically.
- Government-wide rulemaking Web site: Go to *http://www.regulations.gov* and follow the instructions for sending your comments electronically.
- Mail: Docket Management Facility, U.S. Department of Transportation, 400 Seventh Street, SW., Nassif Building, Room PL–401, Washington, DC 20591.
- Fax: (202) 493–2251.
- Hand delivery: Room PL–401 on the plaza level of the Nassif Building, 400 Seventh Street, SW., Washington, DC, between 9 a.m. and 5 p.m., Monday through Friday, except Federal holidays.

After all comments are reviewed and addressed, a notice of availability of the Final General Conformity Determination will be published.

Instructions: All submissions received must include the agency name and docket number or Regulatory Information Number (RIN).

For Technical Information Contact: Joan Seward, All Weather Operations Program Manager, ASW–230.1, FAA SW Region Headquarters, 2601 Meacham Blvd., Fort Worth, TX 76137, telephone (817) 222–5278, e-mail: *Joan.M.Seward@faa.gov.*

SUPPLEMENTARY INFORMATION: In December of 2005, Southwest announced its intent to begin scheduled service at DEN commencing in January 2006. As required by Title 14 of the Code of Federal Regulations (14 CFR) 119.51, Southwest applied to the FAA to amend Southwest's OpSpecs to include DEN, thereby authorizing Southwest to conduct DEN service. The request to the FAA detailed Southwest's startup plans, commencing on January 3, 2006, with 13 daily landing/take-off cycles (LTO),[1] equating to a total of 26 operations, and contained other information for the FAA to conduct the environmental review required under the regulations implementing the National Environmental Policy Act (NEPA) (40 CFR 1500–1508), section 176(c) of the Clean Air Act (40 CFR 93.150 *et seq.*), and by FAA Order 1050.1E, Environmental Impacts: Policies and Procedures. At that time Southwest indicated an interest in increasing operations to as many as 50 or 60 daily operations at DEN, but agreed to maintain operations at DEN below *de minimis* levels until a General

[1] For clarification, the phrase ''one round trip'' is synonymous with a landing/takeoff cycle (LTO). The LTO consists of an aircraft taxiing from the terminal gate area to the runway, taking off by accelerating down the runway until 1,000 feet off the ground, climbing to the altitude of the local mixing height, returning on approach by descending from the mixing height to the runway, and finally completing the cycle by taxiing from the runway to the gate. An aircraft operation is defined as either a landing or a takeoff. Therefore, one LTO cycle is equal to two aircraft operations.

Conformity Determination could be completed.

The FAA issued an OpSpec to Southwest for this initial level of activity accompanied by an environmental categorical exclusion dated December 14, 2005, determining that the daily 13 LTOs were below *de minimis* emission levels and were not regionally significant. Therefore, the no further determination was required under the General Conformity rule.

Southwest subsequently announced a scheduled increase of service planned for March 2006 with an additional 9 daily LTOs, bringing the total expected daily LTOs to 22. This General Conformity Determination addresses FAA's proposed Federal action to amend Southwest's OpSpecs to accommodate future operations as high as 60 daily LTOs at DEN (hereto known as the ''Proposed Action''). The information presented in this DGCD demonstrates conformance with Colorado's SIPs and substantiates that the net emissions resulting from Southwest's increased service at DEN are not regionally significant.

Air Quality Designations for the Denver Metropolitan Area

DEN is owned and operated by the City and County of Denver, and is located within the Denver Metropolitan Area (DMA) for air quality planning purposes. The DMA is designated as attainment for the criteria pollutants sulfur dioxide (SO_2), nitrogen dioxide (NO_2), lead, and particulate matter with aerodynamic diameter of 2.5 micrometers or less ($PM_{2.5}$).

The DMA is an Environmental Protection Agency (EPA) designated attainment/maintenance area for the criteria pollutants carbon monoxide (CO), particulate matter with aerodynamic diameter of 10 micrometers or less (PM_{10}), and the 1-hour ozone national ambient air quality standard (NAAQS). In addition, DEN is located in an Early Action Compact (EAC) area for the 8-hour ozone standard, which has a deferred air quality designation date of December 31, 2006.

Pursuant to the Clean Air Act, Federal actions in nonattainment and maintenance areas are required to conform with SIPs to either bring an area into compliance with the NAAQS or maintain compliance with the NAAQS.

FAA approval to amend Southwest's OpSpecs for DEN constitutes a Federal action required to conform to Colorado's SIPs for CO, PM_{10}, and the EAC requirements for the 8-hour ozone standard.

General Conformity Applicability Analysis

Section 176(c) of the Clean Air Act prohibits the Federal government from engaging in, supporting, providing financial assistance for, licensing, permitting, or approving any activity that does not conform to an applicable implementation plan. A general conformity determination may be required for each pollutant where the net direct and indirect emissions in a nonattainment or maintenance area caused by the action exceed *de minimis* levels (40 CFR 93.151(b)). In addition to the *de minimis* applicability analysis, a conformity evaluation of Federal actions must also demonstrate the Proposed Action does not constitute a regionally significant action, which is defined as an action that contributes 10 percent or more of total basin-wide emissions.

DMA's pollutants of concern for general conformity purposes include CO, PM_{10}, and the precursors of ozone, namely volatile organic compounds (VOCs) and oxides of nitrogen (NO_X).[2] An analysis must be performed to determine if the net annual emissions of these pollutants resulting from the Proposed Action exceed General Conformity *de minimis* thresholds. For DMA, the General Conformity *de minimis* thresholds are 100 tons per year for each pollutant of concern.

Emissions Inventory

To determine the net effect of the proposed project, an emissions inventory of reasonably foreseeable, direct, and indirect emissions caused by the Federal action was performed to calculate the difference between the Proposed Action scenario—Southwest's foreseeable maximum activity level at DEN, and the No Action scenario—no service by Southwest at DEN.[3] The evaluation was performed using the FAA's Emissions and Dispersion Modeling System (EDMS) version 4.4. Under the Proposed Action, no facility improvements would required (*e.g.*, new parking facilities, aircraft gates, etc.) to accommodate the Proposed Project. Therefore, the sources considered in the emissions inventory were limited to aircraft operations and supporting equipment (ground support equipment (GSE) and auxiliary power unit (APU)), surface transportation, and parking lots.

Aircraft and Supporting Equipment Emissions

Under the No Action alternative, Southwest's operations would not be introduced at DEN, therefore no emissions from aircraft operations would occur. Similarly, no change in either APU emissions or (GSE) emissions would occur. Although the extent and timing of potential increases in Southwest's flight activity in the Proposed Project are imprecise, the airline's business plan indicates that earliest possible calendar year that the maximum foreseeable aircraft activity of 60 daily LTOs could be achieved is 2007. Under the Proposed Action scenario, aircraft emissions were quantified based on this maximum foreseeable level and conservatively assumed to occur every day of the year for a total of 10,950 LTOs per year. To match Southwest's fleet and registered engines, emissions were calculated from CFM56–3B1, CFM56–3B2, CFM56–7B22, and CFM56–7B24 engines proportionately to the number of aircraft/engine combinations registered in Southwest's national fleet (see Table 1).

[2] Ozone is formed in the atmosphere rather than being directly emitted from sources. Ozone forms as a result of volatile organic compounds (VOCs) and oxides of nitrogen (NO_X) reacting in the presence of sunlight in the atmosphere. VOCs and NO_X are termed ''ozone precursors'' and their emissions are regulated in order to control the creation of ozone. Aircraft engine emissions data is in the form of ''total hydrocarbons'' or HC. For the purposes of this analysis, HCs are conservatively assumed equivalent to VOCs.

[3] For the purposes of this analysis, FAA has taken the conservative approach of considering the No Action scenario to include no Southwest operations at DEN. Although Southwest began initial operations at DEN in January of 2005, Southwest agreed to limit operations to levels determined to be *de minimis* to accommodate the preparation of a General Conformity Determination of up to 60 LTO's per day.

TABLE 1.—SOUTHWEST AIRCRAFT INFORMATION AND POTENTIAL MAXIMUM ACTIVITY AT DEN

Aircraft type	Engine	National quantity*	Percent of national fleet (percent)	Maximum daily LTOs	Maximum annual LTOs
B733/B735	CFM56–3B1	202	47.5	28	10,220
B733	CFM56–3B2	17	4.0	2	730
B737–700	CFM56–7B22	204	48.0	29	10,585
B737–700	CFM56–7B24	2	0.5	1	365
Totals		425	100	60	21,900

* BACK database, April 2005.

Southwest has indicated that it will use the available gate electrification at DEN. Gate electrification supplies power to an aircraft while parked at airport gates by enabling connection of the aircraft's systems to 400hz electrical power. The result is that the use of the aircraft's auxiliary power units (APUs) is reduced, which, in turn, reduces the associated combustion pollutants. Typically, with gate electrification, APU usage is minimized to approximately 8 minutes per LTO. Southwest employs Allied Signal model GTCP85–129 APUs on their B737–300s and Allied Signal model 1319B APUs on their B737–700s.

Southwest has identified the individual types and quantities of ground support equipment (GSE), and time duration dedicated to each aircraft LTO. Table 2 presents the GSE information that was used to calculate emissions for the Proposed Action scenario.

TABLE 2.—SOUTHWEST GSE FLEET INFORMATION PER LTO AT DEN

GSE description	Quantity	Fuel	Minutes of operation per vehicle per LTO
Aircraft Tug	1	Diesel	5
Baggage Tug	2	Electric	20
Lavatory Truck	1	Diesel	10
Baggage Belt Loader	2	Diesel	20
Hydrant Fueling Truck	1	Diesel	10

Source: Southwest Airlines, 2005.

Surface Transportation Emissions

Under the No Action alternative, Southwest's operations would not be introduced at DEN, therefore no additional emissions from increased surface transportation to/from DEN would occur. As a result of the Proposed Action, the employees of Southwest Airlines will induce new origin and destination (O&D) traffic to and from DEN. Over the years, the City and County of Denver has worked with the Denver Regional Council of Governments (DRCOG), which is the metropolitan planning organization (MPO) for the DMA, to include airport-related O&D traffic and emissions in DRCOG's regional traffic and air quality models, respectively. DRCOG estimates and forecasts vehicle miles traveled (VMT) for the region by compiling traffic data, population data, and employment data. Specifically, DRCOG estimates O&D traffic for DEN based upon data supplied by the City and County of Denver. DRCOG then models all traffic and associated emissions for transportation conformity purposes. This General Conformity Determination does not include emissions from Southwest Airlines employee traffic because DRCOG and the City and County of Denver have already taken steps to ensure that future employee traffic, such as Southwest's, and the associated future emissions are included in the conforming regional transportation plan for the DMA.

Parking Lot Emissions

In the No Action alternative, no additional parking lot emissions would be generated from passengers or Southwest employees. The increase in parking lot emissions resulting from the increased Southwest employee vehicular traffic to DEN associated with the proposed action was calculated using the assumption that each proposed Southwest employee would arrive and depart DEN daily in the employee's own vehicle.

Results of the Emissions Inventory

For determining general conformity applicability, the net increases of each pollutant of concern, if any, is determined by calculating the difference in emissions between the Proposed Action—taking into account not only additional emissions resulting from the action itself, but also any decreases in emissions which may result—and the No Action alternative. Table 3 presents the total emissions increase from the Proposed Action and the comparison to the General Conformity *de minimis* thresholds. The Proposed Action exceeds the *de minimis* thresholds for the pollutants of CO and NO_X. As a result, a General Conformity determination is required.[4]

[4] Although not required because emissions are above *de minimis*, Table 4 provides the estimated emission contributions from the Proposed Action in comparison to the regional budget levels from the various SIP documents, both existing and future plans. The common assumption in these values is that the annual tons of emissions estimated from the Proposed Action are evenly distributed across 365 days of the year. The FAA is aware that contribution of emissions from the proposed Southwest activity will vary by day, week, month, and season. However, the overall daily emission contributions from the Proposed Action is so low relative to regional inventories that further estimates of daily emission contributions from the Proposed Action will not change the determination. Therefore, the emissions from the Proposed Action are not regionally significant.

TABLE 3.—NET EMISSION INCREASES FROM THE PROPOSED ACTION AND COMPARISON TO DE MINIMIS THRESHOLDS

[Tons per year]

Category	CO	VOC	NO_X	SO_X	$PM_{10}/PM_{2.5}$
Aircraft	260.798	22.754	195.110	19.413	2.199
APU	3.999	0.269	2.052	0.358	unavailable
GSE	2.543	0.660	6.889	1.216	0.530
Parking	<0.001	<0.001	<0.001	<0.001	<0.001
Total	267.339	23.682	204.051	20.985	2.728
de minimis threshold	100	100	100	not applicable	100

Source: FAA Emissions Dispersion Modeling System version 4.4.

TABLE 4.—COMPARISON OF PROPOSED ACTION EMISSIONS TO THE SIP REGIONAL INVENTORIES

Pollutants of concern	Units	Daily emissions from proposed action	Original SIP maintenance plan	SIP maintenance plan update	Is the proposed action regionally significant?
CO	(tons/day)	0.732	1,125.4 to 1,203.3	1,736.9 to 1,864.9	No.
PM_{10}	(tons/winter day)	0.007	66.9 to 95.6	62.3 to 107.5	No.
VOC	(tons/summer day)	0.065	459 to 507	NA	No.
NO_X	(tons/summer day)	0.559	308 to 332	303.3 to 353.3*	No.

* Updated regional NO_X values were listed in the PM_{10} Maintenance Plan Update.

General Conformity Determination

Under the General Conformity regulations, the FAA can utilize a number of criteria for demonstrating conformity with SIPs. For this determination, the FAA believes it is appropriate to utilize the criterion of demonstrating that emissions for the Proposed Action are specifically identified and accounted for in the SIP maintenance plans under 40 CFR 93.158(a)(1). The FAA has reviewed specific SIP maintenance plan documentation to affirm that the City and County of Denver's airport emissions inventory for DEN was included in the SIP maintenance plans by the State and regional air quality agencies. In a letter dated April 5, 2006, the Colorado Department of Public Health and Environment confirmed the emissions associated with the Proposed Action are reasonably accounted for in the Colorado SIPs. The FAA recognized that the SIP maintenance plans for the DMA include the future aviation activity levels predicted for the airport. The aircraft emissions included in the Technical Support Documents for the 2000 CO Maintenance Plan, the 2001 PM_{10} Maintenance Plan, the 2001 1-hour Ozone Maintenance Plan, and the 2004 8-hour Ozone Action Plan all rely on a Colorado Department of Aviation's aviation activity forecast that was prepared in 1999. From the forecasted activity levels, emissions were calculated and properly collaborated with the Colorado Department of Public Health and Environment for inclusion in the budgets listed in DMA's SIP maintenance plans.

Figure 1 provides the historical aircraft activity and future levels used to predict SIP emissions for future milestone maintenance years. Note that the future aircraft activity levels for DEN are extrapolated based on historical levels plus the addition of Southwest's proposed activity. The resulting aircraft activity levels are extrapolated forward to illustrate how the influence of the Proposed Action compares to the future aircraft activity represented in the SIP maintenance plans.

The addition of Southwest's increased aircraft activity levels directly affects the air carrier category at DEN. To better illustrate the influence Southwest will have on this category as it was represented in the SIP maintenance plans, Figure 2 isolates the air carrier category. The additional operations have been added to the actual trend line and compared to the future air carrier activity levels for future milestone years to demonstrate that the expected levels of operations are still below the air carrier aircraft activity levels represented in the SIP maintenance plans.

The FAA demonstrates that the total of the actual aircraft operations plus the proposed aircraft operations and associated emissions for Southwest is below the SIP's forecasted values, and therefore emissions attributed to flights by Southwest are already accounted for in the SIP emissions inventories. The FAA believes, and State representatives confirmed, that the total net emissions associated with the Proposed Action (including the aircraft emissions) are reasonably accounted for in the SIP maintenance plans. As a result, the Proposed Action demonstrates a conformance to the existing and updated SIP maintenance plans for the DMA.

BILLING CODE 4910–13–P

Figure 1. DEN total aircraft operations (air carrier + air taxi + general aviation + military) with Southwest added for SIP comparison purposes

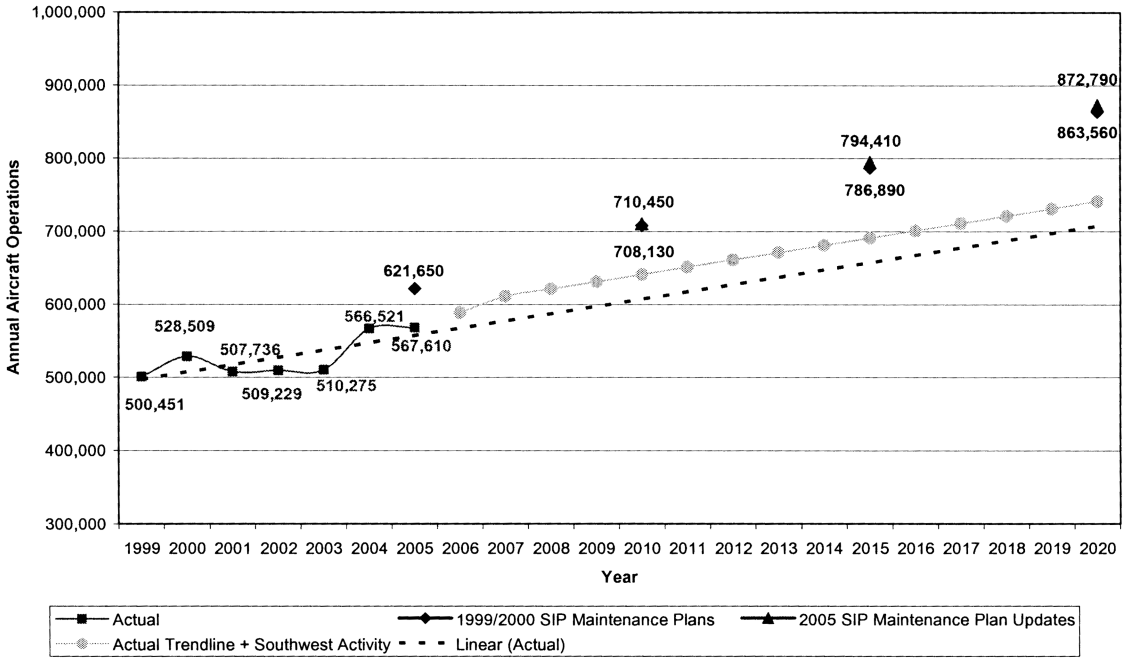

Figure 2. DEN air carrier operations with Southwest added for SIP comparison purposes.

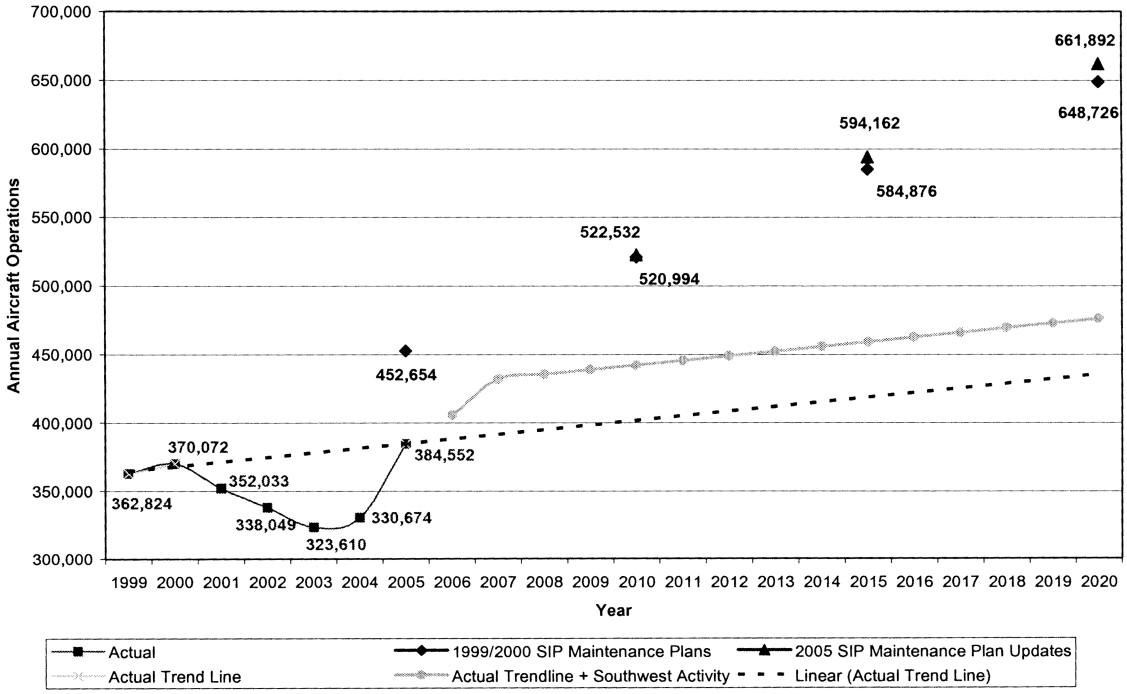

BILLING CODE 4910–13–C

References

40 CFR part 93 subpart B—Determining Conformity of General Federal Actions to State or Federal Implementation Plans.

EPA and FAA, General Conformity Guidance for Airports Questions and Answers, September 25, 2002.

Carbon Monoxide References

Colorado Department of Public Health & Environment, Air Pollution Control Division, Technical Support Document: Carbon Monoxide Redesignation Request and Maintenance Plan for the Denver Metropolitan Area, January 4, 2000.

Colorado Department of Public Health & Environment, Air Pollution Control Division, Carbon Monoxide Redesignation Request and Maintenance Plan for the Denver Metropolitan Area, January 10, 2000.

Colorado Department of Public Health & Environment, Air Pollution Control Division, Technical Support Document: Carbon Monoxide Maintenance Plan Revision for the Denver-Boulder Attainment Area, June 2003.

Colorado Department of Public Health & Environment, Air Pollution Control Division, Carbon Monoxide Maintenance Plan for the Denver Metropolitan Area, June 19, 2003.

Colorado Department of Public Health & Environment, Air Pollution Control Division, Technical Support Document: Carbon Monoxide Maintenance Plan Revision for the Denver-Boulder Attainment Area, September 2005.

Colorado Department of Public Health & Environment, Air Pollution Control Division, Carbon Monoxide Maintenance Plan for the Denver Metropolitan Area, December 15, 2005.

PM_{10} References

Colorado Department of Public Health & Environment, Air Pollution Control Division, Technical Support Document: Colorado State Implementation Plan for PM_{10}, Denver Metropolitan Nonattainment Area, Emissions Inventories and Dispersion Model Results for the Maintenance Plan, Adopted April 19, 2001.

Colorado Department of Public Health & Environment, Air Pollution Control Division, PM_{10} Redesignation Request and Maintenance Plan for the Denver Metropolitan Area, Adopted April 19, 2001.

Colorado Department of Public Health & Environment, Air Pollution Control Division, Revised Technical Support Document: Colorado State Implementation Plan for PM_{10}, Denver Metropolitan Nonattainment Area, Emissions Inventories and Dispersion Model Results for the Maintenance Plan, September, 2005.

Colorado Department of Public Health & Environment, Air Pollution Control Division, PM_{10} Maintenance Plan for the Denver Metropolitan Area, Approved by the Colorado Air Quality Control Commission December 15, 2005.

Ozone References

Colorado Department of Public Health & Environment, Air Pollution Control Division, Technical Support Document: Colorado State Implementation Plan for Ozone, Denver Metropolitan Nonattainment Area, Emissions Inventories for the Maintenance Plan and Redesignation Request, Adopted January 11, 2001.

Colorado Department of Public Health & Environment, Air Pollution Control Division, Ozone Redesignation Request and Maintenance Plan for the Denver Metropolitan Area, Adopted January 11, 2001.

Colorado Department of Public Health & Environment, Air Pollution Control Division, Technical Support Document: Colorado State Implementation Plan for Ozone, Denver Metropolitan Nonattainment Area, Appendix C—Emissions Inventories for the Ozone State Implementation Plan, February 26, 2004.

Federal Register, USEPA approval of DMA's Ozone Action Plan, May 17, 2005.

Issued in Washington, DC, on April 20, 2006.

John M. Allen,

Deputy Director, Flight Standards Service.

[FR Doc. 06–3998 Filed 4–26–06; 8:45 am]

BILLING CODE 4910–13–P

DEPARTMENT OF TRANSPORTATION

Federal Aviation Administration

[Summary Notice No. PE–2006–11]

Petitions for Exemption, Summary of Petitions Received

AGENCY: Federal Aviation Administration (FAA), DOT.

ACTION: Notice of petitions for exemption received.

SUMMARY: Pursuant to FAA's rulemaking provisions governing the application, processing, and disposition of petitions for exemption part 11 of Title 14, Code of Federal Regulations (14 CFR), this notice contains a summary of certain petitions seeking relief from specified requirements of 14 CFR. The purpose of this notice is to improve the public's awareness of, and participation in, this aspect of FAA's regulatory activities. Neither publication of this notice nor the inclusion or omission of information in the summary is intended to affect the legal status of any petition or its final disposition.

DATES: Comments on petitions received must identify the petition docket number involved and must be received on or before May 17, 2006.

ADDRESSES: You may submit comments [identified by DOT DMS Docket Number FAA–2006–24500] by any of the following methods:

- Web site: *http://dms.dot.gov.* Follow the instructions for submitting comments on the DOT electronic docket site.
- Fax: 1–202–493–2251.
- Mail: Docket Management Facility; U.S. Department of Transportation, 400 Seventh Street, SW., Nassif Building, Room PL–401, Washington, DC 20590–001.
- Hand Delivery: Room PL–401 on the plaza level of the Nassif Building, 400 Seventh Street, SW., Washington, DC, between 9 a.m. and 5 p.m., Monday through Friday, except Federal holidays.

Docket: For access to the docket to read background documents or comments received, go to *http://dms.dot.gov* at any time or to Room PL–401 on the plaza level of the Nassif Building, 400 Seventh Street, SW., Washington, DC, between 9 a.m. and 5 p.m., Monday through Friday, except Federal holidays.

FOR FURTHER INFORMATION CONTACT: Susan Lender (202) 267–8029 or John Linsenmeyer (202) 267–5174, Office of Rulemaking (ARM–1), Federal Aviation Administration, 800 Independence Avenue, SW., Washington, DC 20591. This notice is published pursuant to 14 CFR 11.85 and 11.91.

Issued in Washington, DC, on April 21, 2006.

Anthony F. Fazio,

Director, Office of Rulemaking.

Petitions for Exemption

Docket No.: FAA–2006–24500.

Petitioner: Raytheon Missile Systems/Advanced Programs.

Section of 14 CFR Affected: 4 CFR 45.23(b), 91.9(b)(2), and 91.203(a) and (b).

Description of Relief Sought: The exemption, if granted, would permit Raytheon to use 1″ lettering for the word ''Experimental'' on its unmanned aircraft because of the limited space available to display the designation. It would also permit Raytheon to keep the aircraft flight manual, the airworthiness certificate, and the U.S. registration certificate in the Ground Control Station, rather than in the aircraft. Since there is no pilot on the aircraft, the documents are best available to the pilot in the Ground Control Station.

[FR Doc. E6–6354 Filed 4–26–06; 8:45 am]

BILLING CODE 4910–13–P

DEPARTMENT OF TRANSPORTATION

Federal Aviation Administration

Commercial Space Transportation Advisory Committee—Open Meeting

AGENCY: Federal Aviation Administration (FAA), DOT.

ACTION: Notice of Commercial Space Transportation Advisory Committee Open Meeting.

SUMMARY: Pursuant to Section 10(a)(2) of the Federal Advisory Committee Act (Pub. L. 92–463, 5 U.S.C. App. 2), notice is hereby given of a meeting of the Commercial Space Transportation Advisory Committee (COMSTAC). The meeting will take place on Wednesday, May 24, 2006, starting at 8 a.m. at the Federal Aviation Administration Headquarters Building, 800 Independence Avenue, SW., Washington, DC, in the Bessie Coleman Conference Center, located on the 2nd Floor. This will be the forty-third meeting of the COMSTAC.

The proposed agenda for the meeting will feature an update on commercial space transportation legislative activities, briefings on national space and security policies, new RLV technology developments, and the Office of Space Commercialization in the Department of Commerce, and an activities report from FAA's Office of Commercial Space Transportation. The 2006 Commercial Space Transportation Forecasts on the geosynchronous and non-geosynchronous markets will also be released at this meeting. An agenda will be posted on the FAA Web site at *http://ast.faa.gov/COMSTAC.* Meetings of the COMSTAC Working Groups (Technology and Innovation, Reusable Launch Vehicle, Risk Management, and Launch Operations and Support) will be held on Tuesday, May 23, 2006. For specific information concerning the times and locations of the working group meetings, contact the Contact Person listed below.

Individuals who plan to attend and need special assistance, such as sign language interpretation or other reasonable accommodations, should inform the Contact Person listed below in advance of the meeting.

FOR FURTHER INFORMATION CONTACT: Brenda Parker (AST–100), Office of the Commercial Space Transportation, 800 Independence Avenue, SW., Room 331, Washington, DC 20591, telephone (202) 267–3674; E-mail *brenda.parker@faa.dot.gov.*

Issued in Washington, DC, April 19, 2006.

Patricia Grace Smith,

Associate Administrator for Commercial Space Transportation.

[FR Doc. E6–6306 Filed 4–26–06; 8:45 am]

BILLING CODE 4910–13–P

DEPARTMENT OF TRANSPORTATION

Federal Aviation Administration

Sixth Meeting: RTCA Special Committee 207/Airport Security Access Control Systems

AGENCY: Federal Aviation Administration (FAA), DOT.

ACTION: Notice of RTCA Special Committee 207 Meeting, Airport Security Access Control Systems.

SUMMARY: The FAA is issuing this notice to advise the public of a meeting of RTCA Special Committee 207, Airport Security Access Control Systems.

DATES: The meeting will be held May 11, 2006, from 10-5 p.m.

ADDRESSES: The meeting will be held at RTC A, Inc., Conference Rooms, 1828 L Street, NW., Suite 805, Washington, DC 20036.

FOR FURTHER INFORMATION CONTACT: (1) RTCA Secretariat, 1828 L Street, NW., Suite 805, Washington, DC 20036; telephone (202) 833–9339; fax (202) 833–9434; web site *http://www.rtca.org.*

SUPPLEMENTARY INFORMATION: Pursuant to section 10(a)(2) of the Federal Advisory Committee Act (P.L. 92–463, 5 U.S.C., Appendix 2), notice is hereby given for a Special Committee 207 meeting. The agenda will include:

- May 11:
  - Opening Plenary Session (Welcome, Introductions, and Administrative Remarks)
  - Agenda Overview
  - Workgroup Reports
  - Workgroup 2: System Performance Requirements
  - Workgroup 3: Subsystem Functional Performance Requirements
  - Workgroup 4: System Verification and validation
  - Workgroup 5: Biometrics
  - Workgroup 6: Credentials
  - Workgroup 7: Perimeter
  - ICAO Update
  - Closing Plenary Session (Other Business, Establish Agenda, Date and Place for Seventh and Eighth Meetings).

Attendance is open to the interested public but limited to space availability. With the approval of the chairmen, members of the public may represent oral statements at the meeting. Persons wishing to present statements or obtain information should contact the person listed in the **FOR FURTHER INFORMATION CONTACT** section. Members of the public may present a written statement to the committee at any time.

Issued in Washington, DC, on April 18, 2006.

Robert L. Bostiga,

RTCA Advisory Committee.

[FR Doc. 06–3946 Filed 4–26–06; 8:45am]

BILLING CODE 4910–13–M

DEPARTMENT OF TRANSPORTATION

Federal Highway Administration

Environmental Impact Statement: Butler County, PA

AGENCY: Federal Highway Administration (FHWA), DOT.

ACTION: Cancellation of the notice of intent.

SUMMARY: This notice rescinds the previous Notice of Intent (issued October 3, 2001—Vol. 66, No. 192) to prepare an Environmental Impact Statement for a proposed highway project in Butler County.

FOR FURTHER INFORMATION CONTACT: David W. Cough, P.E., Director of Operations, Federal Highway Administration, Pennsylvania Division Office, 228 Walnut Street, Room 508, Harrisburg, PA 17101–1720, Telephone (717) 221–3411–OR–Brian Allen, Assistant District Engineer for Design, Pennsylvania Department of Transportation, District 10–0, 2550 Oakland Avenue, P.O. Box 429, Indiana, PA, 15701, Telephone (724) 357–2077.

SUPPLEMENTARY INFORMATION: Additional traffic analyses have indicated that all project alternatives can be down-scoped with little or no significant impact to the environment. An Environmental Assessment will be pursued, based on a revised project scoping.

(Catalog of Federal Domestic Assistance Program Number 20.205, Highway Planning and Construction. The regulations implementing Executive Order 12372 regarding intergovernmental consultation on Federal programs and activities apply to this program.)

James A. Cheatham,

FHWA Division Administrator, Harrisburg, PA.

[FR Doc. 06–3988 Filed 4–26–06; 8:45am]

BILLING CODE 4910–22–M

DEPARTMENT OF TRANSPORTATION

Federal Highway Administration

Environmental impact statement: Gaston and Mecklenburg Counties, NC

AGENCY: Federal Highway Administration (FHWA), DOT.

ACTION: Notice of intent.

SUMMARY: The FHWA is issuing this notice to advise the public that an environmental impact statement will be prepared for a proposed highway project in Gaston and Mecklenburg Counties, North Carolina.

FOR FURTHER INFORMATION CONTACT: Clarence W. Coleman, P.E., Operations Engineer, Federal Highway Administration, 310 New Bern Avenue, Ste 410, Raleigh, North Carolina 27601–1418, Telephone: (919) 856–4346.

SUPPLEMENTARY INFORMATION: The FHWA, in cooperation with the North Carolina Department of Transportation (NCDOT) and the North Carolina Turnpike Authority (NCTA), will prepare an environmental impact statement (EIS) addressing proposed improvements to east-west transporation mobility in the area around the City of Gastonia and other municipalities in southern Gaston County. As part of this proposed action, the NCDOT also proposes to improve mobility, access and connectivity between southern Gaston County and Mecklenburg County. The proposed project study area consists of the following general boundaries: I–85 to the north, the South Carolina State line to the south, the Charlotte-Douglas International Airport to the east, and the I–85 and US 29–74 junction to the west. The proposed action is consistent with the thoroughfare plans approved by the Gaston Urban Area Metropolitan Planning Organization (MPO) and the Mecklenburg-Union MPO.

Alternatives to be studied in detail include:

1. No-Build.
2. Construction of a new location highway. Sixteen detailed study alternatives or corridors will be studied in the Draft EIS.

The proposed project is being developed as a candidate toll road. Accordingly, in conjunction with development of the Draft Environmental Impact Statement and other on-going project development activities, NCTA is conducting a study to evaluate the feasibility of developing the proposed highway as a toll road and funding it, in whole or in part, through the issuance of ''revenue bonds.''

Letters describing the proposed action and soliciting comments have been sent to appropriate Federal, State and local agencies. Citizens' informational workshops, meetings with local officials, and a public hearing will be held. Information on the dates, times and locations of the citizens' informtional workshops and public hearings will be advertised in the local news media, and newsletters will be mailed to those on the project mailing list. The Draft EIS will be available for public and agency review and comment prior to the public hearing.

To ensure that the full range of issues related to this proposed action are addressed and all significant issues identified, comments and suggestions are invited from all interested parties. Comments or questions concerning this proposed action and the EIS should be directed to the FHWA at the address provided above.

(Catalog of Federal Domestic Assistance Program Number 20.205, Highway Planning and Construction. The regulations implementing Executive order 12372 regarding intergovernmental consultation on Federal programs and activities apply to this program.)

Issued on: April 20, 2006.

Clarence W. Coleman,

Operations Engineer, Raleigh, North Carolina.

[FR Doc. 06–3949 Filed 4–26–06; 8:45am]

BILLING CODE 4910–22–M

DEPARTMENT OF TRANSPORTATION

Federal Highway Administration

Notice of Final Federal Ageny Actions on Proposed Highway in Alaska

AGENCY: Federal Highway Administration (FHWA), DOT.

ACTION: Notice of limitation on claims for judicial review of actions by FHWA and other Federal Agencies.

SUMMARY: This notice announces actions taken by the FHWA and other Federal agencies that are final within the meaning of 23 U.S.C. 139(l)(1). The actions relate to a proposed highway project, the East Lynn Canal Highway, Alaska Route Number 7, from Echol Cove to Katz Point in the Haines and Juneau Boroughs, State of Alaska. Those actions grant licenses, permits, and approvals for the project.

DATES: By this notice, the FHWA is advising the public of final agency action subject to 23 U.S.C. 139(l)(1). A claim seeking judicial review of the Federal agency actions on the highway project will be barred unless the claim is filed on or before October 24, 2006. If the Federal law that authorizes judicial review of a claim provides a time period of less than 180 days for filing such claim, then that shorter time period still applies.

FOR FURTHER INFORMATION CONTACT: Tim Haugh, Environmental and Right-of-Way Programs Manager, FHWA Alaska Division, P.O. Box 21648, Juneau, Alaska 99802–1648; office hours 7 a.m.–4:30 p.m. (AST), phone (907) 586–7418; e-mail *Tim.Haugh@fhwa.dot.gov.* You may also contact Reuben Yost, Special Projects Manager, Alaska Department of Transportation and Public Facilities DOT&PF), 6860 Glacier Highway, P.O. Box 112506, Juneau, Alaska 99811–2506; office hours 8 a.m.–5 p.m. (AST), phone (907) 465–1774, e-mail *Reuben_Yost@dot.state.ak.us.*

SUPPLEMENTARY INFORMATION: Notice is hereby given that the FHWA and other Federal agencies have taken final agency actions by issuing approvals for the following highway project in the State of Alaska: FHWA Alaska Division Project Number STP–000S(131) titled the Juneau Access Improvements Project, involves construction of approximately 51 miles of two lane highway from the end of Glacier Highway at Echo cover in the City and Borough of Juneau to a point two miles north of the Katzehin River in the Haines Borough. A ferry terminal will be constructed at the north end of the highway, and new shuttle ferries will be constructed to run from Haines and Skagway. Three major rivers will be bridged as well as several streams. The actions by the Federal agencies, and the laws under which such actions were taken, are described in the Final Environmental Impact Statement (FEIS) for the project, approved on January 18, 2006, in the FHWA Record of Decision (ROD) issued on April 3, 2006, and in other documents in the FHWA administrative record. The FEIS, ROD, and other documents in the FHWA administrative record file are available by contacting the FHWA or the DOT&PF at the addresses provided above. The FHWA FEIS and ROD can be viewed and downloaded from the project Web site at *http://dot.alaska.gov/juneauaccess* or viewed at public libraries in the project area.

This notice applies to all Federal agency decisions as of the issuance date of this notice and all laws and Executive Orders under which such actions were taken, including but not limited to:

1. General: National Environmental Policy Act (NEPA) [42 U.S.C. 4321–4351]; Federal-Aid Highway Act [23 U.S.C. 109].
2. Air: Clean Air Act, [42 U.S.C. 7401–7671(q)].
3. Land: Section 4(f) of the Department of Transportation Act of 1966 [49 U.S.C. 303].
4. Wildlife: Endangered Species Act [16 U.S.C. 1531–1544 and section 1536], Marine Mammal Protection Act [16 U.S.C. 1361], Fish and Wildlife Coordination Act [16 U.S.C. 661–667(d)], Migratory Bird Treaty Act [16 U.S.C. 703–712]; Magnuson-Stevens

Fisheries Conservation and Management Act 1976 as amended [16 U.S.C. 1801 *et seq.*].

5. Historic and Cultural Resources: Section 106 of the National Historic Preservation Act of 1966, as amended [16 U.S.C. 470(f) *et seq.*].

6. Social and Economic: Civil Rights Act of 1964 [42 U.S.C. 2000(d)–2000(d)(1)].

7. Wetlands and Water Resources: Land and Water Conservation Fund (LWCF) [16 U.S.C. 4601–4604]; Wild and Scenic Rivers Act [16 U.S.C. 1271–1287].

8. Executive Orders: E.O. 11990 Protection of Wetlands; E.O. 11988 Floodplain Management; E.O. 12898, Federal Actions to Address Environmental Justice in Minority Populations and Low Income Populations; E.O. 13186 Migratory Birds.

(Catalog of Federal Domestic Assistance Program Number 20.205, Highway Planning and Construction. The regulations implementing Executive Order 12372 regarding intergovernmental consultation on Federal programs and activities apply to this program.)

Authority: 23 U.S.C. 139(1)(1).

Issued on: April 18, 2006.

David C. Miller,

Division Administrator, Juneau, Alaska.

[FR Doc. 06–3989 Filed 4–26–06; 8:45am]

BILLING CODE 4910–22–M

DEPARTMENT OF TRANSPORTATION

Federal Highway Administration

Notice of Final Federal Agency Actions on Proposed Highway in Ohio

AGENCY: Federal Highway Administration (FHWA), DOT.

ACTION: Notice of Limitation on Claims for Judicial Review of Actions by FHWA and Other Federal Agencies.

SUMMARY: This notice announces actions taken by the FHWA and other Federal agencies that are final within the meaning of 23 U.S.C. 139(l)(1). The actions relate to a proposed highway project, U.S. Route 24, from east of the IR469 bypass in New Haven, Indiana, Allen County, Indiana to SR424 west of Defiance, Ohio. Those actions grant licenses, permits, and approvals for the project.

DATES: By this notice, the FHWA is advising the public of final agency actions subject to 23 U.S.C. 139(l)(1). A claim seeking judicial review of the Federal agency actions on the highway project will be barred unless the claim is filed on or before October 24, 2006. If the Federal law that authorizes judicial review of a claim provides a time period of less than 180 days for filing such claim, then that shorter time period still applies.

FOR FURTHER INFORMATION CONTACT: Mr. Mark Vonder Embse, Senior Transportation Engineer, Federal Highway Administration, 200 North High Street, Columbus, Ohio 43215; telephone: (614) 280–6854; e-mail: *Mark.Vonderembse@fhwa.dot.gov.* FHWA Ohio Division Office's normal business hours are 8 a.m. to 4:30 p.m. (eastern time). You may also contact Mr. Tim Hill, Ohio Department of Transportation, 1980 West Broad Street, Columbus, Ohio 43223; telephone: (614) 644–0377.

SUPPLEMENTARY INFORMATION: Notice is hereby given that the FHWA and other Federal agencies have taken final agency actions by issuing licenses, permits, and approvals for the following highway project in the State of Ohio: U.S. Route 24, from east of the IR469 bypass in New Haven, Indiana, Allen County, Indiana to SR424 west of Defiance, Ohio. The project will be a 40 mile long, four-lane divided expressway in Ohio and freeway in Indiana. The proposed highway will be on new alignment. The alignment is south of and parallel to the Maumee River and existing US24. West of the City of Defiance, the proposed highway overlaps with the existing US24 alignment prior to crossing the Maumee River. The actions by the Federal agencies, and the laws under which such actions were taken, are described in the Final Environmental Impact Statement (FEIS) for the project, approved on October 26, 2005, in the FHWA Record of Decision (ROD) issued on December 9, 2005, and in other documents in the FHWA administrative record. The FEIS, ROD, and other documents in the FHWA administrative record file are available by contacting the FHWA or the Ohio Department of Transportation at the addresses provided above. The FHWA FEIS and ROD can be viewed at the Paulding County Carnegie Library-Antwerp and Payne Branches, Defiance Public Library, Defiance County Engineer's Office, Allen County (IN) Engineer's Office. For additional locations to view the FEIS and/or ROD, please call the aforementioned contacts.

This notice applies to all Federal agency decisions as of the issuance date of this notice and all laws under which such actions were taken, including but not limited to:

1. *General:* National Environmental Policy Act (NEPA) [42 U.S.C. 4321–4351]; Federal-Aid Highway Act [23 U.S.C. 109].

2. *Air:* Clean Air Act, 42 U.S.C. 7401–7671(q).

3. *Land:* Section 4(f) of the Department of Transportation Act of 1966 [49 U.S.C. 303]; Landscaping and Scenic Enhancement (Wildflowers), 23 U.S.C. 319; Land and Water Conservation Fund (LWCF), 16 U.S.C. 4601–4604.

4. *Wildlife:* Endangered Species Act [16 U.S.C. 1531–1544 and Section 1536], Marine Mammal Protection Act [16 U.S.C. 1361], Fish and Wildlife Coordination Act [16 U.S.C. 661–667(d)], Migratory Bird Treaty Act [16 U.S.C. 703–712].

5. *Historic and Cultural Resources:* Section 106 of the National Historic Preservation Act of 1966, as amended [16 U.S.C. 470(f) *et seq.*]; Archeological Resources Protection Act of 1977 [16 U.S.C. 470(aa)–11]; Archeological and Historic Preservation Act [16 U.S.C. 469–469(c)]; Native American Grave Protection and Repatriation Act (NAGPRA) [25 U.S.C. 3001–3013].

6. *Social and Economic:* Civil Rights Act of 1964 [42 U.S.C. 2000(d)–2000(d)(1)]; American Indian Religious Freedom Act [42 U.S.C. 1996]; Farmland Protection Policy Act (FPPA) [7 U.S.C. 4201–4209].

7. *Wetlands and Water Resources:* Clean Water Act, 33 U.S.C. 1251–1377 (Section 404, Section 401, Section 319); Safe Drinking Water Act (SDWA), 42 U.S.C. 300(f)–300(j)(6); Rivers and Harbors Act of 1899, 33 U.S.C. 401–406; Wild and Scenic Rivers Act, 16 U.S.C. 1271–1287; Emergency Wetlands Resources Act, 16 U.S.C. 3921, 3931; TEA–21 Wetlands Mitigation, 23 U.S.C. 103(b)(6)(m), 133(b)(11); Flood Disaster Protection Act, 42 U.S.C. 4001–4128.

8. *Executive Orders:* E.O. 11990 Protection of Wetlands; E.O. 11988 Floodplain Management; E.O. 12898, Federal Actions to Address Environmental Justice in Minority Populations and Low Income Populations; E.O. 11593 Protection and Enhancement of Cultural Resources; E.O. 13007 Indian Sacred Sites; E.O. 13287 Preserve America; E.O. 13175 Consultation and Coordination with Indian Tribal Governments; E.O. 11514 Protection and Enhancement of Environmental Quality; E.O. 13112 Invasive Species.

(Catalog of Federal Domestic Assistance Program Number 20.205, Highway Planning and Construction. The regulations implementing Executive Order 12372 regarding intergovernmental consultation on Federal programs and activities apply to this program.)

Authority: 23 U.S.C. 139(l)(1).

Issued on: April 19, 2006.

Dennis Decker,

Division Administrator, Columbus, Ohio.

[FR Doc. E6–6305 Filed 4–26–06; 8:45 am]

BILLING CODE 4910–22–P

DEPARTMENT OF TRANSPORTATION

Federal Motor Carrier Safety Administration

[Docket No. FMCSA–2006–24195]

Notice of Request for Comments on Extension of Currently Approved Information Collections: OMB Control Numbers 2126–0032 and 2126–0033 (Financial and Operating Statistics for Motor Carriers of Property)

AGENCY: Federal Motor Carrier Safety Administration (FMCSA), DOT.

ACTION: Notice and request for comments.

SUMMARY: In accordance with the Paperwork Reduction Act of 1995 FMCSA announces its intent to submit two currently-approved Information Collection Requests (ICRs) described to the Office of Management and Budget (OMB) for review and approval. The ICRs describes two information collection activities and their expected costs and burdens. The **Federal Register** notice allowing for a 60-day comment period on the ICRs was published on January 18, 2006 (71 FR 2985). The agency received five comments in support of the continuation of these ICRs.

DATES: Please send your comments by May 30, 2006. OMB must receive your comments by this date in order to act quickly on the ICR.

ADDRESSES: Send comments to the Office of Information and Regulatory Affairs, Office of Management and Budget, 725 Seventeenth Street, NW., Washington, DC 20503, Attention: DOT/FMCSA Desk Officer.

FOR FURTHER INFORMATION CONTACT: Ms. Toni Proctor, phone: (202) 366–2998; Fax: (202) 366–3518; email: *toni.proctor@fmcsa.dot.gov*; Federal Motor Carrier Safety Administration, U.S. Department of Transportation, Office of Research and Analysis, 400 Seventh Street SW., Suite 8214, Washington, DC 20590. Office hours are from 8 a.m. to 4 p.m., Monday through Friday, except Federal Holidays.

SUPPLEMENTARY INFORMATION:

(1) *Title:* Annual Report of Class I and Class II Motor Carriers of Property (Including Household Goods and Dual Property Motor Carriers) (formerly OMB Control Number 2139–0004). This information collection (IC) was transferred from the former Bureau of Transportation Statistics (BTS) to FMCSA on September 29, 2004 (69 FR 51009).

FMCSA IC: OMB Control No: 2126–0032.

Form No.: Form M.

Type of Review: Extension of a currently-approved information collection.

Respondents: Class I and Class II Motor Carriers of Property.

Number of Respondents: 3,000 (per year).

Estimated Time Per Response: 9 hours.

Expiration Date: April 30, 2006.

Frequency: Annually.

Total Annual Burden: 27,000 hours [3,000 respondents × 9 hours per response = 27,000].

(2) *Title:* Quarterly Financial Report of Class I Motor Carriers of Property and Household Goods (formerly OMB Control Number 2139–0002). This information collection was transferred from BTS to FMCSA on September 29, 2004 (69 FR 51009).

FMCSA IC: OMB Control No: 2126–0033.

Form No.: Form QFR.

Type of Review: Extension of a currently approved information collection.

Respondents: Class I Motor Carriers of Property.

Number of Respondents: 1,000 (per quarter).

Estimated Time Per Response: 1.8 hours (27 minutes per quarter).

Expiration Date: April 30, 2006.

Frequency: Quarterly.

Total Annual Burden: 1,800 hours [1,000 respondents × 1.8 hours per response = 1,800].

Background

The Annual Report of Class I and Class II Motor Carriers of Property and Household Goods (Form M) and Quarterly Financial Report of Class I Motor Carriers of Property (Including Household Goods and Dual Property Motor Carriers) (Form QFR) are mandated reporting requirements applicable for for-hire motor carriers. Motor carriers (including interstate and intrastate) [1] subject to the Federal Motor Carrier Safety Regulations (FMCSRs) are classified on the basis of their gross carrier operating revenues. Under the financial and operating statistics program, FMCSA collects balance sheet and income statement data, along with information on safety needs, tonnage, mileage, employees, transportation equipment and other related data. FMCSA may also ask carriers to respond to surveys concerning their operations. The data and information collected will be made publicly available and used by FMCSA to determine a motor carrier's compliance with the F&OS program requirements set forth in subchapter B of 49 CFR part 1420.

The regulations were formerly administered by the Interstate Commerce Commission and later transferred to the U.S. Department of Transportation on January 1, 1996, by section 103 of the Interstate Commerce Commission Termination Act of 1995 (ICCTA) (Pub. L. 104–88, 109 Stat. 803, December 29, 1995), now codified at 49 U.S.C. 14123. The Secretary of Transportation (Secretary) transferred the authority to administer the F&OS program to the Bureau of Transportation Statistics on September 30, 1998 (63FR 52192). Pursuant to this authority, the BTS, now part of the Research and Innovative Technology Administration (RITA), became the DOT modal administration responsible for implementing the F&OS program and requirements in 49 CFR part 1420. On September 29, 2004, the Secretary transferred the responsibility for the F&OS program from BTS to FMCSA (69 FR 51009). FMCSA plans to publish a final rule in the future to transfer and re-designate the F&OS program reporting requirements at 49 CFR part 1420 from BTS (now RITA) to FMCSA.

We particularly request comments on: (1) Whether the collection of information is necessary for FMCSA to meet its goal of reducing truck crashes and its usefulness to this goal; (2) the accuracy of the estimate of the burden of the information collection; (3) ways to enhance the quality, utility and clarity of the information collected; and (4) ways to minimize the burden of the collection of information on respondents, including using automated collection techniques or other forms of information technology. The agency will summarize and/or include your comments in the request for OMB's clearance of these information collections.

[1] For purposes of the Financial and Operating Statistics (F&OS) program, carriers are classified into the following three groups; (1) Class I carriers are those having annual carrier operating revenues (including interstate and intrastate) of $10 million or more after applying the revenue deflator formula in Note A of part 1420; (2) Class II carriers are those having annual carrier operating revenues (including interstate and intrastate) of at least $3 million but less than $10 million after applying the revenue deflator formula in Note A of part 1420; and (3) Class III carriers are those having annual carrier operating revenues (including interstate and intrastate) of less than $3 million after applying the revenue deflator formula in Note A of part 1420.

Issued on April 20, 2006.

Warren E. Hoemann,

Acting Administrator.

[FR Doc. E6–6352 Filed 4–26–06; 8:45 am]

BILLING CODE 4910–EX–P

DEPARTMENT OF TRANSPORTATION

Research and Innovative Technology Administration

[Docket No.: RITA–2006–24566]

Notice of Request for Approval To Collect New Information: Confidential Close Call Reporting System

AGENCY: Bureau of Transportation Statistics (BTS), Research and Innovative Technology Administration (RITA), DOT.

ACTION: Notice and request for comments.

SUMMARY: In accordance with the requirements of section3506(c)(2)(A) of the Paperwork Reduction Act of 1995, this notice announces that the Bureau of Transportation Statistics (BTS) intends to request the Office of Management and Budget (OMB) to approve a new information collection effort in railroad yards. This data collection effort is in support of a five-year research study aiming at improving rail safety by analyzing information on close calls and other unsafe occurrences in the rail industry. The study is conducted by the Office of Human Factors in the Federal Railroad Administration and is designed to identify safety issues and propose corrective actions based on voluntary reports of close calls submitted to BTS. This collection is necessary because data on close calls are not normally reported to the railroad carriers or the Federal Railroad Administration.

DATES: Comments must be received by June 26, 2006.

ADDRESSES: You can mail or hand-deliver comments to the U.S. Department of Transportation (DOT), Dockets Management System (DMS). You may submit your comments by mail or in person to the Docket Clerk, Docket No. RITA–2006–24566, U.S. Department of Transportation, 400 Seventh Street, SW., Room PL–401, Washington, DC 20590–0001. Comments should identify the docket number; paper comments should be submitted in duplicate. The DMS is open for examination and copying, at the above address, from 9 a.m. to 5 p.m., Monday through Friday, except Federal holidays. If you wish to receive confirmation of receipt of your written comments, please include a self-addressed, stamped postcard with the following statement: ''Comments on Docket RITA–2006–24566.'' The Docket Clerk will date stamp the postcard prior to returning it to you via the U.S. mail. Please note that due to delays in the delivery of U.S. mail to Federal offices in Washington, DC, we recommend that persons consider an alternative method (the Internet, fax, or professional delivery service) to submit comments to the docket and ensure their timely receipt at U.S. DOT. You may fax your comments to the DMS at (202) 493–2251.

If you wish to file comments using the Internet, you may use the DOT DMS Web site at *http://dms.dot.gov.* Please follow the online instructions for submitting an electronic comment. You can also review comments on-line at the DMS Web site at *http://dms.dot.gov.*

Please note that anyone is able to electronically search all comments received into our docket management system by the name of the individual submitting the comment (or signing the comment if submitted on behalf of an association, business, labor union, etc.). You may review DOT's complete Privacy Act Statement in the **Federal Register** published on April 11, 2000 (Volume 65, Number 70; pages 19477–78) or you may review the Privacy Act Statement at *http://dms.dot.gov.*

FOR FURTHER INFORMATION CONTACT: Demetra V. Collia, RTS 31, Room 3430, Bureau of Transportation Statistics, Research and Innovative Technology Administration, 400 Seventh Street, SW., Washington, DC 20590; (202) 366–1610; Fax No. (202) 493–0568; e-mail: *demetra.collia@dot.gov.* Office hours are from 8:30 a.m. to 5 p.m., Monday through Friday, except Federal holidays.

Data Confidentiality Provisions: The confidentiality of Close Calls data is protected under the BTS confidentiality statute (49 U.S.C. 111(k) and the Confidential Information Protection and Statistical Efficiency Act (CIPSEA) of 2002 (Pub. L. 107–347, Title V). In accordance with these confidentiality statutes, only statistical and non-identifying data will be made publicly available through reports. Further, BTS will not release to FRA or any other public or private entity any information that might reveal the identity of individuals or organizations mentioned in close call reports.

SUPPLEMENTARY INFORMATION:

I. The Data Collection

The Paperwork Reduction Act of 1995 (44 U.S.C. chapter 35; as amended) and 5 CFR part 1320 require each Federal agency to obtain OMB approval to initiate an information collection activity. BTS is seeking OMB approval for the following BTS information collection activity:

Title: Confidential Close Call Reporting System.

OMB Control Number: 2139–NEW.

Type of Review: Approval of data collection.

Respondents: Employees of selected (pilot) railroad sites.

Number of Respondents: 350 (per annum).

Estimated Time per Response: 0.50 hours.

Frequency: Intermittent for 5 years. (Reports are submitted when there is a qualifying event, *i.e.*, a close call occurs within a pilot site. The frequency of such event is estimated to be approximately one per day.)

Total Annual Burden: 175.00 hours.

II. Background

Collecting data on the nation's transportation system is an important component of BTS's responsibility to the transportation community and is authorized in BTS statutory authority (49 U.S.C. 111(c)(1) and (2) and 49 U.S.C. 111(c)(5)(j)). BTS and FRA share a common interest in promoting rail safety based on better data. To that end, FRA's Office of Research and Development is sponsoring the Confidential Close Call Reporting System (C^3RS) Demonstration Project to investigate the effectiveness of such system in improving rail safety.

A close call represents a situation in which an ongoing sequence of events was stopped from developing further, preventing the occurrence of potentially serious safety-related consequences. This might include the following: (1) Events that happen frequently, but have low safety consequences; (2) events that happen infrequently but have the potential for high consequences (e.g., a train in dark territory proceeds beyond its authority); (3) events that are below the FRA reporting threshold (e.g., an event that causes a minor injury); and (4) events that are reportable to FRA but have the potential for a far greater accident than the one reported (e.g., a slow speed collision with minor damage to the equipment and no injuries.)

Employees involved in a close call will be asked to fill out a questionnaire which will be made available on the Web and at their work site and mail it to BTS. The close call questionnaire will request the respondent to provide information such as: (1) Name and contact information; (2) time and location of the incident; (3) a short description of the event; (4) contributing factors to the close call; and (5) any other information that might be useful

in determining a root cause of such event.

BTS will collect close call reports submitted by railroad employees, develop an analytical database containing the reported data and other pertinent information, and protect the confidentiality of these data through its own statute (49 U.S.C. 111(i)) and the Confidential Information Protection and Statistical Efficiency Act of 2002 (CIPSEA). The database will be a valuable tool to railroad carriers and the FRA in their effort to identify safety issues and provide corrective measures before an accident occurs.

Voluntary reporting of close calls to a confidential system can provide a tool to identify and correct weaknesses in railroad safety systems before an accident actually occurs. The C^3RS demonstration project will foster a voluntary, cooperative, non-punitive environment to communicate safety concerns. Through the analysis of close calls the FRA and the railroad community will receive information about factors that may contribute to unsafe events and the error recovery mechanisms that prevented an adverse consequence from occurring. Such information can be used to develop new training programs, identify root causes of potentially adverse events, assess risk and allocate resources to address those risks more efficiently. The database will also provide other users such as rail safety researchers with valuable information regarding precursors to safety risks and contribute to research and development of intervention programs aimed at preventing accidents and fatalities.

III. Request for Comments

BTS requests comments on any aspects of these information collections, including: (1) The accuracy of the estimated burden; (2) ways to enhance the quality, usefulness, and clarity of the collected information; and (3) ways to minimize the collection burden without reducing the quality of the information collected, including additional use of automated collection techniques or other forms of information technology.

Issued in Washington, DC on April 20, 2006.

William Bannister,

Acting Deputy Director, Bureau of Transportation Statistics, Research and Innovative Technology Administration.

[FR Doc. E6–6348 Filed 4–26–06; 8:45 am]

BILLING CODE 4910–HY–P

DEPARTMENT OF THE TREASURY

Submission for OMB Review; Comment Request

April 20, 2006.

The Department of Treasury has submitted the following public information collection requirement(s) to OMB for review and clearance under the Paperwork Reduction Act of 1995, Public Law 104–13. Copies of the submission(s) may be obtained by calling the Treasury Bureau Clearance Officer listed. Comments regarding this information collection should be addressed to the OMB reviewer listed and to the Treasury Department Clearance Officer, Department of the Treasury, Room 11000, 1750 Pennsylvania Avenue, NW., Washington, DC 20220.

DATES: Written comments should be received on or before May 30, 2006 to be assured of consideration.

Financial Management Service

OMB Number: 1510–0037.

Type of Review: Extension.

Title: Voucher for Payment of Awards.

Form: FMS form 5135.

Description: Awards certified to Treasury are paid annual as funds are received from foreign governments. Vouchers are mailed to award holders showing payments due. Award holders sign vouchers certifying that he/she is entitled to payment.

Respondents: Individuals or households.

Estimated Total Burden Hours: 700 hours.

Clearance Officer: Jiovannah Diggs, (202) 874–7662, Financial Management Service, Room 144, 3700 East West Highway, Hyattsville, MD 20782.

OMB Reviewer: Alexander T. Hunt, (202) 395–7316, Office of Management and Budget, Room 10235, New Executive Office Building, Washington, DC 20503.

Michael A. Robinson,

Treasury PRA Clearance Officer.

[FR Doc. E6–6316 Filed 4–26–06; 8:45 am]

BILLING CODE 4810–35–P

DEPARTMENT OF THE TREASURY

Departmental Offices—Office of International Investment; Proposed Collection; Comment Request

ACTION: Notice and request for comments.

SUMMARY: The Department of the Treasury, as part of its continuing effort to reduce paperwork and respondent burden, invites the general public and other Federal agencies to take this opportunity to comment on continuing information collections, as required by the Paperwork Reduction Act of 1995, Public Law 104–13 (44 U.S.C. 3506(c)(2)(A)). Currently, the Office of International Investment within the Department of the Treasury is soliciting comments concerning the information collection provisions of the Regulations Pertaining to Mergers, Acquisitions and Takeovers by Foreign Persons, 31 CFR 800.402.

DATES: Written comments should be received on or before June 26, 2006 to be assured of consideration.

ADDRESSES: Direct all written comments to Gay Sills, Director, Office of International Investment, Department of the Treasury, 1500 Pennsylvania Avenue, NW., Washington, DC 20220—(202) 622–1860.

FOR FURTHER INFORMATION CONTACT: Requests for additional information should be directed to Jack Dempsey, Economist, Office of International Investment, Department of the Treasury, 1500 Pennsylvania Avenue, NW., Washington, DC 20220—(202) 622–1860; or Francine McNulty Barber, Senior Counsel, Department of the Treasury, Room 2014, 1500 Pennsylvania Ave., NW., Washington, DC 20220—(202) 622–1947.

SUPPLEMENTARY INFORMATION: *Title:* Regulations Pertaining to Mergers, Acquisitions and Takeovers by Foreign Persons.

OMB Number: 1505–0121.

Abstract: The information request in this proposed collection is contained in 31 CFR 800.402. The information collected under these regulations is used by the Committee on Foreign Investment in the United States (CFIUS), an inter-agency committee chaired by the Secretary of the Treasury and comprised of the Secretaries of State, Defense, Treasury, Commerce and Homeland Security, the Attorney General, the U.S. Trade Representative, the Director of the Office of Management and Budget, the Chairman of the Council of Economic Advisers, and the Assistants to the President for National Security, National Economic Policy, and Science and Technology. The President has delegated to CFIUS the President's authority under section 721 of the Defense Production Act of 1950 to determine the effects on the national security of acquisitions proposed or pending after the date of enactment (August 23, 1988) by or with foreign persons that could result in foreign control of persons engaged in

interstate commerce in the United States.

Current Actions: Extension.

Type of Review: Extension.

Affected Public: Foreign businesses and foreign individuals.

Estimated Number of Responses: 65.

Estimated Time Per Respondent: This varies, depending on individual circumstances, with an average of 60 hours.

Estimated Total Annual Burden Hours: 3900 hours.

Requests For Comments: Comments submitted in response to this notice will be summarized and/or included in the request for OMB approval. All comments will become a matter of public record. Comments are invited on: (a) Whether the collection of information is necessary for the proper performance of the functions of the agency, including whether the information shall have practical utility; (b) the accuracy of the agency's estimate of the burden of the collection of information; (c) ways to enhance the quality, utility, and clarity of the information to be collected; (d) ways to minimize the burden of the collection of information on respondents, including through use of automated collection techniques or other forms of information technology; and (e) estimates of capital or start-up costs and costs of operation, maintenance, and purchase of services to provide information.

Francine McNulty Barber,

Senior Counsel, Office of the Assistant General Counsel for International Affairs.

[FR Doc. E6–6351 Filed 4–26–06; 8:45 am]

BILLING CODE 4810–25–P

Corrections

Federal Register

Vol. 71, No. 81

Thursday, April 27, 2006

This section of the FEDERAL REGISTER contains editorial corrections of previously published Presidential, Rule, Proposed Rule, and Notice documents. These corrections are prepared by the Office of the Federal Register. Agency prepared corrections are issued as signed documents and appear in the appropriate document categories elsewhere in the issue.

DEPARTMENT OF THE INTERIOR

Fish and Wildlife Service

50 CFR Part 17

RIN 1018-AU22; 1018-AI48

Endangered and Threatened Wildlife and Plants; Final Rule To Remove the Arizona Distinct Population Segment of the Cactus Ferruginous Pygmy-owl (Glaucidium brasilianum cactorum) From the Federal List of Endangered and Threatened Wildlife; Withrawal of the Proposed Rule to Designate Critical Habitat; Removal of Federally Designated Critical Habitat

Correction

FR Document 06-3470 was published in the Rules section of the Federal Register in the issue of April 14, 2006 (71 FR 19452). This document was inadvertently published as a single Rule document. However, the portion of the document withdrawing the proposed rule to designate new critical habitat for the Arizona DPS of the pigmy-owl (67 FR 7103, November 27, 2002) should have been a separate document, and should have appeared in the Proposed Rule section.

[FR Doc. C6–3470 Filed 4–26–06; 8:45 am]

BILLING CODE 1505–01–D

Federal Register

Thursday,
April 27, 2006

Part II

Department of Commerce

Bureau of Industry and Security

15 CFR Parts 711, 712 et al.
Chemical Weapons Convention Regulations; Final Rule

DEPARTMENT OF COMMERCE

Bureau of Industry and Security

15 CFR Parts 710, 711, 712, 713, 714, 715, 716, 717, 718, 719, 720, 721, and 722

[Docket No. 990611158–5327–06]

RIN 0694–AB06

Chemical Weapons Convention Regulations

AGENCY: Bureau of Industry and Security, Commerce.

ACTION: Final rule.

SUMMARY: On April 25, 1997, the United States ratified the Convention on the Prohibition of the Development, Production, Stockpiling and Use of Chemical Weapons and on Their Destruction, also known as the Chemical Weapons Convention (CWC or Convention). The Bureau of Industry and Security (BIS) published an interim rule, on December 30, 1999, that established the Chemical Weapons Convention Regulations (CWCR) to implement the provisions of the CWC affecting U.S. industry and other U.S. persons. The CWCR include requirements to report certain activities, involving scheduled chemicals and unscheduled discrete organic chemicals, and to provide access for on-site verification by international inspectors of certain facilities and locations in the United States. This final rule updates the CWCR to remove outdated provisions and include additional requirements identified in the implementation of the CWC and by clarifying other CWC requirements.

DATES: This rule is effective April 27, 2006. Although there is no formal comment period, public comments on this regulation are welcome on a continuing basis.

ADDRESSES: You may submit comments, identified by RIN 0694–AB06, by any of the following methods:

- Federal eRulemaking Portal: *http://www.regulations.gov.* Follow the instructions for submitting comments.
- E-mail: *public.comments@bis.doc.gov.* Include ''RIN 0694–AB06'' in the subject line of the message.
- Fax: (202) 482–3355. Please alert the Regulatory Policy Division, by calling (202) 482–2440, if you are faxing comments.
- Mail or Hand Delivery/Courier: Willard Fisher, U.S. Department of Commerce, Bureau of Industry and Security, Regulatory Policy Division, 14th St. & Pennsylvania Avenue, NW., Room 2705, Washington, DC 20230, ATTN: RIN 0694–AB06.

FOR FURTHER INFORMATION CONTACT: For questions of a general or regulatory nature, contact the Regulatory Policy Division, telephone: (202) 482–2440. For program information on declarations, reports, advance notifications, chemical determinations, recordkeeping, inspections and facility agreements, contact the Treaty Compliance Division, Office of Nonproliferation and Treaty Compliance, telephone: (703) 605–4400; for legal questions, contact Rochelle Woodard, Office of the Chief Counsel for Industry and Security, telephone: (202) 482–5301.

SUPPLEMENTARY INFORMATION:

Background

I. Summary of CWCR Changes Contained in This Final Rule

On April 25, 1997, the United States ratified the Convention on the Development, Production, Stockpiling and Use of Chemical Weapons and on Their Destruction, also known as the Chemical Weapons Convention (CWC or Convention). The CWC, which entered into force on April 29, 1997, is an arms control treaty with significant nonproliferation aspects. As such, the CWC bans the development, production, stockpiling or use of chemical weapons and prohibits States Parties to the CWC from assisting or encouraging anyone to engage in a prohibited activity. The CWC provides for declaration and inspection of all States Parties' chemical weapons and chemical weapon production facilities, and oversees the destruction of such weapons and facilities. To fulfill its arms control and nonproliferation objectives, the CWC also establishes a comprehensive verification scheme and requires the declaration and inspection of facilities that produce, process or consume certain ''scheduled'' chemicals and unscheduled discrete organic chemicals, many of which have significant commercial applications. The CWC also requires States Parties to report exports and imports and to impose export and import restrictions on certain chemicals. These requirements apply to all entities under the jurisdiction and control of States Parties, including commercial entities and individuals. States Parties to the CWC, including the United States, have agreed to this verification scheme in order to provide transparency and to ensure that no State Party to the CWC is engaging in prohibited activities.

The Chemical Weapons Convention Implementation Act of 1998 (the Act or CWCIA) (22 U.S.C. 6701 *et seq.*), enacted on October 21, 1998, authorizes the United States to require the U.S. chemical industry and other private entities to submit declarations, notifications and other reports and also to provide access for on-site inspections conducted by inspectors sent by the Organization for the Prohibition of Chemical Weapons. Executive Order (E.O.) 13128 delegates authority to the Department of Commerce to promulgate regulations, obtain and execute warrants, provide assistance to certain facilities, and carry out appropriate functions to implement the CWC, consistent with the Act. The Department of Commerce implements CWC import restrictions under the authority of the International Emergency Economic Powers Act, the National Emergencies Act, and E.O. 12938, as amended by E.O. 13128. The Departments of State and Commerce have implemented the CWC export restrictions under their respective export control authorities. E.O. 13128 designates the Department of State as the United States National Authority (USNA) for purposes of the CWC and the Act.

On December 30, 1999, the Bureau of Industry and Security (BIS), U.S. Department of Commerce, published an interim rule that established the Chemical Weapons Convention Regulations (CWCR) (15 CFR Parts 710–722). The CWCR implemented the provisions of the CWC, affecting U.S. industry and U.S. persons, in accordance with the provisions of the Act. This final rule revises the CWCR by updating them to remove outdated provisions (e.g., the initial declaration requirements in parts 713, 714, and 715) and include additional requirements identified as necessary for the implementation of the CWC provisions and by clarifying other CWC requirements. The changes made by this rule were addressed in a proposed rule and request for public comments that BIS published on December 7, 2004.

Specifically, this final rule makes the following revisions to the CWCR:

A. Revisions to Section 710.1 of the CWCR (Definitions of Terms Used in the CWCR)

This rule revises § 710.1 of the CWCR by amending the definition of ''domestic transfer'' to clarify that the term, as applied to the declaration requirements for Schedule 2 or Schedule 3 chemicals under the CWCR, means the movement of a Schedule 2 or Schedule 3 chemical, in quantities and concentrations greater than the specified thresholds under the convention, outside the geographical boundary of a facility in the United

States to another destination in the United States, for any purpose.

This rule adds a definition for the term ''intermediate'' to § 710.1 of the CWCR in order to clarify the use of that term in § 712.5(d) and Supplement No. 2 to part 715 of the CWCR. Section 710.1 of the CWCR is amended to define ''intermediate'' as ''a chemical formed through chemical reaction that is subsequently reacted to form another chemical.'' The definition of ''intermediate'' also clarifies its use in §§ 712.5(d), 713.2(a)(2)(ii) and 714.1(a)(2)(ii), whereby Schedule 1, Schedule 2 and Schedule 3 chemicals that are intermediates, but not transient intermediates, must be considered when determining if a chemical is subject to declaration. Lastly, Supplement No. 2 to part 715 of the CWCR, which provides examples of unscheduled discrete organic chemicals (UDOCs) and UDOC production, indicates that intermediate UDOCs used in a single or multi-step process to produce another declared UDOC are not subject to declaration requirements under the CWCR.

In addition, this rule adds a definition of the term ''advance notification'' to § 710.1 of the CWCR to clarify the use of that term in part 712 of the CWCR. Section 710.1 of the CWCR defines ''advance notification'' to mean ''a notice informing BIS of a company's intention to export to or import from a State Party a Schedule 1 chemical.'' Advance notifications must be submitted to BIS at least 45 days prior to the proposed export or import, except for exports or imports of 5 milligrams or less of saxitoxin for medical/diagnostic purposes which may be submitted to BIS at least 3 days prior to export or import. The definition contained in this rule also indicates that this notification requirement is in addition to any export license requirement under the Export Administration Regulations (EAR) (15 CFR Parts 730–799) or the International Traffic in Arms Regulations (ITAR) (22 CFR Parts 120–130), or import license requirement under the Alcohol, Tobacco, Firearms and Explosives Regulations (27 CFR part 447).

The definition of the term ''production'' in § 710.1 of the CWCR is revised by adding certain notes that incorporate decisions by the Organization for the Prohibition of Chemical Weapons' Conference of the States Parties (OPCW/CSP) regarding the production of Schedule 1, 2, and 3 chemicals. The first note clarifies that the production of Schedule 1 chemicals includes ''formation through chemical synthesis as well as processing to extract and isolate Schedule 1 chemicals.'' The second note clarifies that the ''production'' of a Schedule 2 or Schedule 3 chemical ''means all steps in the production of a chemical in any units within the same plant through chemical reaction, including any associated processes (e.g., purification, separation, extraction, distillation, or refining) in which the chemical is not converted into another chemical. The exact nature of any associated process (*e.g.*, purification, etc.) is not required to be declared.''

This rule adds a definition of the term ''production by synthesis'' in § 710.1 of the CWCR to clarify the use of the term in § 715.1 of the CWCR (*i.e.*, declaration of production by synthesis of UDOCs for purposes not prohibited by the CWC) and Supplement No. 2 to part 715 of the CWCR (*i.e.*, examples of activities that are not considered to be production by synthesis under part 715 of the CWCR). Section 710.1 of the CWCR defines ''production by synthesis'' to mean ''production of a chemical from its reactants.'' This definition replaces the definition of the term ''synthesis'' in § 710.1 of the CWCR. In addition, a new Supplement No. 2 is added to Part 710 of the CWCR to define the types of production covered under the CWCR.

This rule also amends § 710.1 of the CWCR to add a definition of the term ''protective purposes,'' as it relates to Schedule 1 chemicals, stating that protective purposes means any purpose directly related to protection against toxic chemicals and to protection against chemical weapons.

Finally, this rule amends § 710.1 of the CWCR by adding a definition of the term ''transient intermediate'' in order to clarify the scope of the declaration requirements that apply to the production of certain scheduled chemicals. Section 710.1 of the CWCR defines the term ''transient intermediate'' to mean ''any chemical that is produced in a chemical process, but that only exists for a very short period of time and cannot be isolated, even by modifying or dismantling the plant, altering the chemical production process operating conditions, or stopping the chemical production process altogether.''

B. Amendments to Section 710.2 of the CWCR (Scope of the CWCR)

This rule amends § 710.2(a) of the CWCR by removing the phrase ''The CWCR declaration, reporting, and inspection requirements apply * * *'' from that paragraph. Removal of this phrase clarifies which persons and facilities are generally subject to the provisions of the CWCR.

C. Amendments to Section 710.6 of the CWCR (Relationship Between the CWCR and the Export Administration Regulations)

This rule amends § 710.6 of the CWCR to include a reference to Export Control Classification Number (ECCN) 1C395 on the Commerce Control List (CCL), which is in Supplement No. 1 to part 774 of the EAR. ECCN 1C395 controls the following items: (i) mixtures that contain more than 10 percent, but less than 30 percent, by weight of any single CWC Schedule 2 chemical identified in ECCN 1C350.b and (ii) certain medical, analytical, diagnostic and food testing kits that contain CWC Schedule 2 or Schedule 3 chemicals controlled by ECCN 1C350.b or .c, respectively, in an amount not exceeding 300 grams per chemical.

D. Amendments to Supplement No. 1 to Part 710 of the CWCR (List of States Parties to the CWC)

This rule amends Supplement No. 1 to part 710 of the CWCR (States Parties to the Convention on The Prohibition of The Development, Production, Stockpiling, and Use of Chemical Weapons and on Their Destruction) by updating the list of States Parties to include the following recent additions: Afghanistan, Andorra, Antigua and Barbuda, Azerbaijan, Belize, Bhutan, Cambodia, Cape Verde, Chad, Colombia, Democratic Republic of the Congo, Djibouti, Dominica, Eritrea, Gabon, Grenada, Guatemala, Haiti, Honduras, Jamaica, Kazakhstan, Kiribati, Kyrgyzstan, Liberia, Libya, Madagascar, Malaysia, Marshall Islands, Micronesia (Federated States of), Mozambique, Nauru, Niue, Palau, Rwanda, Saint Kitts and Nevis, Saint Vincent and the Grenadines, Samoa, San Marino, Sao Tome and Principe, Serbia and Montenegro, Sierra Leone, Solomon Islands, Thailand, Timor Leste, Tonga, Tuvalu, Uganda, United Arab Emirates, Vanuatu, Yemen, and Zambia. As of March 25, 2006, 178 countries had become States Parties to the CWC.

E. Amendments to Part 711 of the CWCR (General Information Regarding Declaration, Reporting and Advance Notification Requirements)

This rule adds a new § 711.3 that establishes BIS's authority to contact any company to determine whether it is in compliance with the CWCR. Information requested may relate to the production, processing, consumption, export, import, or other activities involving scheduled chemicals and UDOCs described in Parts 712 through 715 of the CWCR. Any person or facility

subject to the CWCR and receiving such a request for information will be required to provide a response to BIS within the time-frame specified in the request. However, this requirement does not, in itself, impose a requirement to create new records or maintain existing records.

This rule amends § 711.3 of the CWCR by moving it to § 711.4 and specifying a time period within which BIS will respond to chemical determination requests. BIS will respond, in writing, to a chemical determination request within 10 working days of receipt of the request.

This rule removes the declaration and reporting requirements in § 711.4 of the CWCR concerning activities that occurred prior to December 30, 1999, since these requirements should already have been satisfied. A new § 711.7 is added to provide information on where to submit declarations, advance notifications, and reports.

This rule also adds a new § 711.8 that contains instructions for applying for authorization to submit electronic declarations and reports through the Web-Data Entry System for Industry (WebDESI). This electronic submission procedure fulfills the requirements of the Government Paperwork Elimination Act (44 U.S.C. 3504).

F. Amendments to Part 712 of the CWCR (Activities Involving Schedule 1 Chemicals)

This rule adds a new § 712.2(a) that prohibits the production of Schedule 1 chemicals for protective purposes, as defined in § 710.1 of the CWCR. This change is consistent with the provisions in Part VI of the CWC Annex on Implementation and Verification (the ''Verification Annex'') that describe production activities not prohibited under the CWC. These provisions restrict production of Schedule 1 chemicals for protective purposes to a single small-scale facility approved by the State Party and one facility outside of a single small-scale facility, which also must be approved by the State Party. The only two facilities in the United States authorized to produce Schedule 1 chemicals for protective purposes are owned and operated by the U.S. Department of Defense—these facilities are not subject to the CWCR, pursuant to § 710.2(a)(1)(i). Therefore, all facilities subject to the CWCR are prohibited from producing Schedule 1 chemicals for protective purposes.

This rule also clarifies that initial declarations submitted in February 2000 remain valid until they are either amended or rescinded. If you plan to alter the technical layout of your declared facility, you must submit an amended declaration to BIS at least 200 calendar days prior to making any such change to your facility.

This rule revises § 712.3 of the CWCR by moving the annual declaration requirements for Schedule 1 facilities to new § 712.5.

This rule amends § 712.4 of the CWCR to clarify the declaration requirements that apply to the establishment of new Schedule 1 chemical production facilities. If a Schedule 1 chemical production facility has never been declared in a previous calendar year or its initial declaration has been withdrawn in accordance with the requirements of amended § 712.5(g) of this rule, you must submit an initial declaration (including a current detailed technical description of the facility) to BIS at least 200 calendar days prior to commencing production of Schedule 1 chemicals at the facility in quantities greater than 100 grams aggregate per year. Such facilities are considered to be ''new Schedule 1 chemical production facilities'' and are subject to an initial inspection within 200 calendar days of the submission of the initial declaration to BIS.

This rule revises the remainder of part 712 of the CWCR, as follows: (1) Advance notification and annual report requirements for Schedule 1 chemical exports and imports are moved from § 712.5 of the CWCR to § 712.6; (2) provisions for Table 1 to § 712.6 of the CWCR are moved to new Supplement No. 2 to part 712 of the CWCR; (3) procedures concerning declarations and reports returned without action by BIS are described in new § 712.8 of the CWCR; and (4) the due date for Annual Declarations for Anticipated Activities is changed from August 3 to September 3, thereby giving Schedule 1 facilities an additional 30 days in which to complete and submit their declarations.

This rule amends the CWCR provisions that require advance notification of exports and imports of Schedule 1 chemicals by establishing an exception to the requirement that BIS must be notified at least 45 calendar days prior to the export or import of a Schedule 1 chemical to or from another State Party. Advance notification of the export or import of 5 milligrams or less of Saxitoxin—B(7), which is listed in Supplement No. 1 to part 712 of the CWCR, for medical or diagnostic purposes only, must be submitted to BIS at least 3 calendar days (rather than 45 calendar days) prior to the date of export or import.

This rule amends the CWCR provisions concerning requirements for amending Schedule 1 declarations and reports. Section 712.7 of the CWCR is amended by clarifying and specifying deadlines for: (1) The types of changes to information on Schedule 1 chemicals and activities in the Annual Declaration of Past Activities that would require submission of an amended declaration to BIS; (2) the types of changes to export or import information in the Annual Reports on Exports and Imports from undeclared facilities, trading companies and U.S. persons that would require submission of an amended report to BIS; and (3) the types of changes to Schedule 1 chemical facility information (*e.g.*, change in company name, address, declaration point of contact, ownership) that would require submission of an amended declaration or report to BIS. In addition, this rule adds a new § 712.7(d) to the CWCR that provides guidance concerning the submission of inspection-related amendments. Amended declarations, based on the final inspection report, must be submitted to BIS within 45 calendar days of the date of BIS's post-inspection letter.

This rule adds a new § 712.8 to the CWCR that provides guidance concerning certain Schedule 1 declarations and reports that are returned without action. In these cases, BIS would return without action (RWA) any Schedule 1 declarations or reports that are determined to be not required by the CWCR. The returned declaration or report would be accompanied by a cover letter explaining why the declaration or report is being returned without action. BIS would retain a copy of the RWA letter, but would not maintain copies of any declarations or reports that were returned without action.

Finally, the provisions previously contained in § 712.6 and Table 1 to § 712.6 of the CWCR, which provided information on the deadlines for submitting Schedule 1 declarations, reports, advance notifications and amendments to BIS, are updated and moved to new § 712.9 and new Supplement No. 2 to part 712 of the CWCR, respectively.

G. Amendments to Part 713 of the CWCR (Activities Involving Schedule 2 Chemicals)

This rule adds a prohibition against exports of Schedule 2 chemicals to States not Party to the CWC in § 713.1(a). Prior to the publication of this rule, the CWCR prohibited imports of Schedule 2 chemicals from States not Party to the CWC, but did not prohibit exports of Schedule 2 chemicals to such countries. Section 742.18 of the EAR requires a license to export Schedule 2

chemicals to States not Party to the CWC and BIS applies a general policy of denial to license applications for such exports. A license is also required to export Schedule 2 chemicals that are controlled under the ITAR.

This rule revises § 713.1(b), which exempts certain mixtures containing Schedule 2 chemicals from the export and import prohibitions contained in § 713.1(a) of the CWCR, as amended by this rule. Prior to the publication of this rule, Section 713.1(b) of the CWCR exempted mixtures containing 10 percent or less, by weight, of any single Schedule 2 chemical. This rule revises § 713.1(b) of the CWCR to exempt the following mixtures: (i) Mixtures containing 1 percent or less, by weight, of any single Schedule 2A or 2A* chemical; (ii) mixtures containing 10 percent or less, by weight, of any single Schedule 2B chemical; and (iii) products identified as consumer goods packaged for retail sale for personal use or packaged for individual use. However, note that the consumer goods exemption for mixtures that contain Schedule 2 chemicals identified under ECCN 1C350 on the CCL (Supplement No. 1 to part 774 of the EAR) applies only to products identified as consumer goods packaged for retail sale for personal use and not to products packaged for individual use (the latter are exempt only by the CWCR and not by the Australia Group controls under the EAR).

In addition, this rule: (i) Removes the provisions concerning declarations on past production of Schedule 2 chemicals for chemical weapons purposes (previously found in § 713.2 of the CWCR); (ii) removes the provisions concerning Schedule 2 initial declarations and initial reports on exports and imports (previously found in §§ 713.3(a)(1)(i) and 713.4(c)(1) and (c)(2) of the CWCR); (iii) amends the provisions providing guidance concerning amendments to declarations and reports (previously found in § 713.7 of the CWCR); (iv) moves the provisions concerning the frequency and timing of declarations and reports (previously found in § 713.6 of the CWCR) to § 713.7; and (v) provides a description of the procedures that BIS will follow concerning declarations and reports RWA'd in § 713.6 of the CWCR.

This rule moves the Schedule 2 chemical annual declaration requirements previously described in § 713.3 of the CWCR to § 713.2 and amends this section to clarify that the scope of Schedule 2 production activities includes any associated processing steps of the Schedule 2 chemical and intermediates. Only transient intermediates are exempted. This clarification will ensure that the CWCR requirements apply to Schedule 2 chemical production where Schedule 2 chemicals are below the applicable concentration threshold when reacted, but subsequently are concentrated above the threshold during in-line processing.

The provisions previously included in § 713.6 and Table 1 to § 713.6 of the CWCR, which contained information on the deadlines for submitting declarations, reports, advance notifications, and amendments to BIS, are moved to § 713.7 and new Supplement No. 2 to part 713 of the CWCR, respectively. In addition, the CWCR provisions on amended declarations and reports for Schedule 2 chemicals are moved from § 713.7 of the CWCR to § 713.5 and amended by clarifying and specifying deadlines for: (i) The types of changes to information on Schedule 2 chemicals and activities in the Annual Declaration of Past Activities or the combined declaration and report that would require submission of an amended declaration to BIS; (ii) the types of changes to export or import information in the Annual Reports on Exports and Imports from undeclared facilities, trading companies and U.S. persons that would require submission of an amended report to BIS; and (iii) the types of changes to Schedule 2 chemical facility information (*e.g.*, change in company name, address, declaration point of contact, ownership) that would require submission of an amended declaration or report to BIS. This rule also moves § 713.6(d) of the CWCR to § 713.5(d) and revises it to provide guidance concerning the submission of inspection-related amendments. Amended declarations, based on the final inspection report, must be submitted to BIS within 45 calendar days of the date of BIS's post-inspection letter.

This rule amends § 713.6 of the CWCR to provide information concerning the return of certain Schedule 2 declarations and reports without action. BIS will RWA (Return Without Action) any Schedule 2 declarations or reports that are determined not to be required by the CWCR. The returned declaration or report will be accompanied by a cover letter explaining why the declaration or report is being returned without action. BIS will retain a copy of the RWA letter, but will not maintain copies of any declarations or reports that are returned without action.

Finally, the provisions previously contained in § 713.6 and Table 1 to § 713.6 of the CWCR, which provided information on the deadlines for submitting Schedule 2 declarations, reports, and amendments to BIS, are updated and moved to § 713.7 and Supplement No. 2 to part 713 of the CWCR, respectively.

H. Amendments to Part 714 of the CWCR (Activities Involving Schedule 3 Chemicals)

This rule amends § 714.1 of the CWCR by removing the provisions that addressed the past production of Schedule 3 chemicals. This section now contains the annual declaration requirements for Schedule 3 chemicals that were previously described in § 714.2 of the CWCR. This section clarifies the scope of Schedule 3 production activities, as defined by the CWCR, to include any associated processing steps of a Schedule 3 chemical and intermediates. Only transient intermediates are exempted. This ensures that the CWCR requirements apply to Schedule 3 chemical production where Schedule 3 chemicals are below the applicable concentration threshold when reacted, but subsequently are concentrated above the threshold during processing.

Section 714.1 of the CWCR is also amended to clarify the procedures that must be followed when determining the range of Schedule 3 chemical production for your plant site during the previous calendar year. Specifically, this rule includes a statement in § 714.1(c)(1) of the CWCR to indicate that you should not aggregate amounts of production from plants on your plant site that did not individually produce a Schedule 3 chemical in an amount exceeding the applicable declaration threshold (i.e., greater than 30 metric tons). In short, only the production amounts from those plants on your plant site that individually produced greater than 30 metric tons of a Schedule 3 chemical should be aggregated for the purpose of calculating the total amount of a Schedule 3 chemical produced at your plant site during the previous calendar year.

This rule also amends § 714.2 of the CWCR by removing outdated Schedule 3 initial declaration and reporting requirements and by including the annual reporting requirements for exports and imports of Schedule 3 chemicals that were previously described in Section 714.3 of the CWCR. Section 714.3 of the CWCR is amended to include the advance declaration requirements for additionally planned production of Schedule 3 chemicals that were previously described in § 714.4 of the CWCR.

In addition, this rule amends Section 714.4 of the CWCR to include the

requirements for amending Schedule 3 declarations and reports that were previously described in § 714.6 of the CWCR. This section is also amended to clarify and specify the deadlines for: (i) The types of changes to information on Schedule 3 chemicals and activities in the Annual Declaration of Past Activities or the combined declaration and report that would require submission of an amended declaration to BIS; (ii) the types of changes to export or import information in the Annual Reports on Exports and Imports from undeclared facilities, trading companies and U.S. persons that would require submission of an amended report to BIS; and (iii) the types of changes to Schedule 3 chemical facility information (e.g., change in company name, address, declaration point of contact, ownership) that would require submission of an amended declaration or report to BIS. In addition, this rule amends the CWCR to provide guidance in § 714.4(d) concerning the submission of inspection-related amendments. Amended declarations, based on the final inspection report, must be submitted to BIS within 45 calendar days of the date of BIS's post-inspection letter.

This rule amends § 714.5 of the CWCR to provide information concerning the return of certain Schedule 3 declarations and reports without action. BIS will RWA (Return Without Action) any Schedule 3 declarations or reports that are determined not to be required by the CWCR. The returned declaration or report will be accompanied by a cover letter explaining why the declaration or report is being returned without action. BIS will retain a copy of the RWA letter, but will not maintain copies of any declarations or reports that are returned without action.

Finally, this rule amends § 714.6 of the CWCR and adds a new Supplement No. 2 to part 714 of the CWCR to provide updated information on the deadlines for submitting Schedule 3 declarations, reports, and amendments to BIS. Information on the deadlines for submitting Schedule 3 declarations and reports was previously provided in § 714.5 and Table 1 to § 714.5 of the CWCR.

I. Amendments to Part 715 of the CWCR (Activities Involving Unscheduled Discrete Organic Chemicals (UDOCs))

This rule amends § 715.1(a)(1)(ii) (which describes the annual declaration requirements for the production of UDOCs containing the elements phosphorus, sulfur or fluorine, referred to as ''PSF chemicals'') to clarify how to calculate the production by synthesis of PSF chemicals at your plant site during the previous calendar year. Specifically, this rule indicates that, when determining the quantity of each PSF chemical produced by a PSF plant on your plant site, you should only aggregate the PSF chemical production quantities from plants that individually produced a PSF chemical in an amount exceeding 30 metric tons. However, note that § 715.1(a)(1)(i) indicates that, when determining UDOC production by synthesis on your plant site, you should aggregate *all* quantities of UDOCs and PSF chemicals produced, regardless of the amount of PSF chemicals produced (*i.e.*, aggregate any PSF chemicals produced).

This rule also revises § 715.1(b)(1) of the CWCR by removing the initial declaration requirement and replacing it with the annual declaration requirement and adding a new subsection that provides for a new form called the ''No Changes Authorization'' form. This form may be submitted to BIS if there are no updates or changes to any information (other than the certifying official and dates signed and submitted) contained in the annual declaration on past activities previously submitted by your plant site. Section § 715.1(b)(2) of the CWCR also indicates that, when you submit a ''No Changes Authorization'' form to BIS, your plant site's UDOC activities will continue to be declared to the OPCW and your plant site will remain subject to inspection (if applicable) based upon the data reported in your previous (*i.e.*, most recent) annual declaration on past activities.

This rule amends § 715.2 of the CWCR to include requirements for amending UDOC declarations—these requirements were previously described in § 715.3 of the CWCR. This section is also amended by clarifying or specifying the deadlines for: (i) The types of changes to information on UDOCs and activities in the Annual Declaration of Past Activities that would require submission of an amended declaration to BIS and (ii) the types of changes to UDOC plant information (e.g., change in company name, address, declaration point of contact, ownership) that would require submission of an amended declaration to BIS. In addition, this rule amends the CWCR to provide guidance in § 715.2(c) concerning the submission of inspection-related amendments. Amended declarations, based on the final inspection report, must be submitted to BIS within 45 calendar days of the receipt of BIS's post-inspection letter.

This rule amends § 715.3 of the CWCR to provide information concerning the return of certain UDOC declarations without action. BIS will RWA any UDOC declarations that are determined not to be required by the CWCR. The returned declaration will be accompanied by a cover letter explaining why the declaration is being returned without action. BIS will retain a copy of the RWA letter, but will not maintain copies of any declarations that are returned without action.

Finally, this rule amends part 715 of the CWCR by adding a new § 715.4 and a new Supplement No. 3 to part 715 to provide updated information on the deadlines for submitting UDOC declarations and amendments to BIS. Information on the deadlines for submitting UDOC declarations was previously provided in § 715.2 and Table 1 to § 715.2 of the CWCR.

J. Amendments to Part 716 of the CWCR (Initial and Routine Inspections of Declared Facilities)

As part of their obligation under the Convention, each State Party to the CWC is subject to inspection of its chemical facilities engaged in certain activities involving scheduled chemicals. Part 716 of the CWCR provides general information about the conduct of initial and routine inspections of declared facilities subject to inspection under CWC Verification Annex Part VI (E), Part VII (B), Part VIII(B), and Part IX(B).

This rule amends § 716.2(a)(2)(i) of the CWCR to clarify that a facility agreement will be concluded by the U.S. National Authority (in coordination with BIS) with the OPCW before a new Schedule 1 facility, declared pursuant to § 712.4 of the CWCR, can produce above threshold.

This rule amends § 716.4(b)(1) of the CWCR to clarify the scope of inspections by specifying that inspections under part 716 of the CWCR may include visual inspection of parts or areas of the plant site, in addition to the facilities or plants producing scheduled chemicals, in order to address any ambiguity that might arise during the inspection. In addition, photographs may be taken and formal interviews of facility personnel may be conducted. The Host Team Leader is responsible, as described in Section 716.4(b)(2) of the CWCR, for determining whether the Inspection Team's request to inspect any area, building, item or record is reasonable—such determinations are made on the basis of treaty requirements. Verification activities under the CWCR are carried out at declared plant sites—access to other parts of a plant site will be provided in a manner sufficient to

clarify for the Inspection Team any ambiguities that arise during an inspection and in accordance with the facility agreement.

Section 716.4(b)(3) of the CWCR is amended to indicate that: (i) Technology subject to the ITAR shall not be divulged to the Inspection Team without U.S. Government authorization and (ii) each facility that is inspected is responsible for identifying ITAR-controlled technology to the BIS Host Team, if known. The extent to which ITAR controls the transfer of technology to foreign nationals is not affected by the CWCR—all inspection-related activities conducted under the CWCR must comply with any applicable ITAR requirements.

This rule also clarifies the pre-inspection briefing requirements described in § 716.4(c) of the CWCR and the requirements in § 716.4(e) of the CWCR concerning the availability of records. The U.S. facility must provide the Inspection Team and the U.S. Government Host Team with appropriate accommodations in which to review relevant documents and must ensure that all relevant information will be available to the teams. In addition, this rule provides that, whenever the current owner of a declared facility does not have access to records for activities that took place under a previous owner of the facility, because such records were not transferred to the current owner of the facility by the previous owner (e.g., as part of the contract involving the sale of the facility), the previous owner must make such records available to the Host Team (for provision to the Inspection Team). However, the current owner of a facility, upon receiving notification of an inspection, is responsible for informing BIS if the previous owner did not transfer records for activities that took place under the previous ownership—this will allow BIS to contact the previous owner of the facility, to arrange for access to such records, if BIS deems them relevant to the inspection activities.

Section 716.7 of the CWCR, which described requirements concerning the provisions of samples by declared facilities, is revised to restrict the analysis of such samples of the verification of the absence of undeclared scheduled chemicals, unless otherwise agreed after consultation with the facility representative.

In addition, this rule adds a new § 716.10 to clarify that, upon receipt of the final inspection report from the OPCW, BIS will send a copy of the final inspection report to the facility for its review. Facilities may submit comments on the final inspection report to BIS, and BIS will consider those comments, to the extent possible, when commenting on the final report. BIS will also send facilities a post-inspection letter with instructions based on decisions made during the inspection.

Finally, this rule removes and reserves Supplement Nos. 2 and 3 of Part 716 of the CWCR, which included the model facility agreement for Schedule 1 chemicals and Schedule 2 chemicals, respectively.

K. Amendments to Part 717 of the CWCR (CWC Clarification Procedures: Consultations and Challenge Inspections)

Article IX of the CWC contains procedures for States Parties to clarify issues concerning compliance with the CWC. A State Party may request the OPCW to conduct an on-site challenge inspection of any facility or location in the territory or in any other place under the jurisdiction or control of any other State Party. A challenge inspection may be conducted solely for the purpose of clarifying and resolving any questions concerning possible non-compliance with the CWC.

This rule amends § 717.1(b) of the CWCR to clarify that BIS will attempt to contact a person or facility that is subject to the Article IX clarification procedures as early as practicable, prior to issuing an official written request for clarification, and that such person or facility must provide the information required by BIS, pursuant to an Article IX clarification request, within five working days of the receipt of BIS's written request for clarification.

In addition, this rule amends § 717.2 (Challenge Inspections) by adding a new provision in § 717.2(b)(2)(ii) explaining that, if consent is not granted within four hours of a facility's receipt of BIS's inspection notification, BIS will assist the Department of Justice in seeking a criminal warrant. Another new provision, *i.e.*, § 717.2(d)(5), is added to describe the requirements concerning pre-inspection briefings for challenge inspections. Section 717.2(d)(5) requires that, prior to the commencement of the challenge inspection, facility representatives must provide the Inspection Team and Host Team with a pre-inspection briefing on the facility that will include the following: (i) The types of activities being conducted at the facility (*e.g.*, business and manufacturing operations); (ii) safety procedures that must be followed during the inspection; and (iii) administrative and logistical arrangements necessary to facilitate the inspection.

Section 717.3 of the CWCR, which describes requirements concerning the provision of samples by declared facilities, is revised to restrict analysis of samples to verifying the presence or absence of scheduled chemicals or appropriate degradation products, unless agreed otherwise.

Finally, this rule adds a new § 717.5 to clarify that, upon receipt of the final inspection report from the OPCW, BIS will forward a copy to the facility, for comment, and will give consideration to the facility's comments prior to responding to the OPCW via the U.S. National Authority. In addition, Section 717.5 provides that, upon receipt of the final inspection report, BIS will send the facility a post-inspection letter detailing the issues that require follow-up action.

L. Amendments to Part 719 of the CWCR (Enforcement)

This rule amends part 719 of the CWCR to clarify that the scope of violations under the Chemical Weapons Convention Implementation Act (the Act) includes willfully failing or refusing to permit access to or copying of ''any record'' required to be established or maintained by the Act or the CWCR—not just those records exempt from disclosure under the Act or the CWCR, as previously stated in section 719.2(a)(2)(iii) of the CWCR. In addition, this rule amends the civil and criminal penalty provisions in sections 719.2(b)(2) and 719.2(c), respectively, to make the same clarification, with respect to the penalties that may be assessed for violations of the recordkeeping requirements in the Act or the CWCR.

M. Amendments to Part 721 of the CWCR (Inspection of Records and Recordkeeping)

This rule amends part 721 of the CWCR to clarify the circumstances under which the previous owner of a declared facility must retain supporting materials and documentation in accordance with the requirements of section 721.2. Specifically, section 721.2(a) is amended to clarify that, if a declared facility is sold, the previous owner of the facility must retain all supporting materials and documentation that were not transferred to the current owner of the facility (*e.g.*, as part of the contract involving the sale of the facility); otherwise, the current owner of the facility is responsible for retaining such supporting materials and documentation. Whenever the previous owner of a declared facility retains such supporting materials and documentation, the owner must inform

BIS of any subsequent change in address or other contact information, so that BIS will be able to contact the previous owner of the facility, to arrange for access to such records, if BIS deems them relevant to inspection activities involving the facility.

II. Summary of Public Comments on the December 7, 2004, Proposed CWCR Rule

On December 7, 2004, BIS published a rule in the **Federal Register** (69 FR 70754), with a request for comments, that proposed amendments to the CWCR to update the CWCR (by adding new requirements identified since the implementation of the CWC) and clarify certain other CWC requirements. BIS received comments from five respondents. Following is a summary of those comments, along with BIS's responses. The comments are organized by regulatory section, with similar comments grouped under the same section heading.

A. Section 710.1 ''Definitions of Terms Used in the Chemical Weapons Convention Regulations (CWCR)''

Comments: One respondent questioned the definition of ''production by synthesis'' set forth in the regulation. The respondent stated that, ''Production by synthesis means production of a chemical that is isolated for use or sale.'' The respondent further stated that, "'synthesis'' chemically means production of a chemical from its reactants. (See Wikipedia, ''Chemical Synthesis,'' *http://en.wikipedia.org/wiki/Chemical_synthesis*). It is distinguished by production of a saleable product by another means, such as processing or biological mediation.'' The respondent suggested that, perhaps, BIS omitted a definition or inappropriately transposed the order of the definitions of ''production'' and ''production by synthesis.'' The respondent stated that the definition of synthesis, in any case, has a ''very specific connotation under the CWC; *e.g.*, UDOCs have to be 'produced by synthesis' (Verification Annex, Part IX, A.1.(b))'' and that this ''connotation'' is not reflected in the revised regulation.

Response: The definition of ''production by synthesis'' has been revised in this final rule to mean ''production of a chemical from its reactants.'' This definition is consistent with language used in the interim CWCR, which has been applied since the CWC entered into force in the United States and has been deemed consistent with CWC requirements through application and practice. Note that Section 715.1(a)(2) of the CWCR establishes criteria for UDOCs produced by synthesis that have been isolated for use or sale as a specific end product.

B. Section 711.3 ''Compliance Review''

Comments: Two respondents noted that they believe BIS already had the authority to conduct compliance reviews under the CWCR. They acknowledged the need for the compliance review element, but suggested that BIS provide companies 30 days to respond to requests for information under new Section 711.3 of the CWCR.

Response: BIS's objective has been, and will continue to be, to minimize the burden of companies to comply with the CWCR, while at the same time ensuring that individual companies and the United States comply with the terms of the CWC and the CWC Implementation Act. In response to comments received, BIS has revised the regulation to state that, if BIS makes a request pursuant to new Section 711.3 of the CWCR, BIS will provide companies 30 days to respond to such request.

Comments: One respondent stated that those companies, which have some sites that are subject to declaration requirements under the CWCR and other sites that are not, should not be required to keep records that substantiate activities at an undeclared site for purposes of compliance.

Response: Section 711.3 of the CWCR does not require companies to maintain records other than those they would normally maintain, pursuant to regular business practices or pursuant to applicable CWCR requirements.

C. Section 714.4(a) ''Changes to Information That Directly Affects a Declared [Schedule 3] Plant Site's Annual Declaration of Past Activities or Combined Annual Declaration or Report Which Was Previously Submitted to BIS''

Comments: One respondent requested that BIS clarify the circumstances under which the proposed requirement in Section 714.4(a) would apply to changes in the ''purpose'' of Schedule 3 chemical production. Section 714.4(a) of the proposed rule stated that an amended declaration or report must be submitted to BIS within 15 days of a change in the ''types'' of Schedule 3 chemicals produced, the ''production range'' for these chemicals (as specified in the CWCR), the ''purpose'' of such production, and the addition of ''new plants'' for Schedule 3 chemical production. The respondent stated that information on the ''purpose'' of production appeared to be ancillary to and only needed under the remote circumstance that a plant site becomes aware of: (1) ''additional plants'' on the plant site producing a Schedule 3 chemical or (2) the production of an ''additional chemical'' at a plant already reporting under the plant site. The respondent requested that BIS provide clarification, by way of examples, of the circumstances under which changes to the ''purpose'' of Schedule 3 production would require submission of an amended declaration to BIS.

Response: Section 714.4(a) of the proposed rule required that an amendment be submitted to BIS within 15 days of any change in: (1) The types of Schedule 3 chemicals produced, (2) the production range of Schedule 3 chemicals (as specified in the CWCR), (3) the purpose of Schedule 3 chemical production, and (4) the addition of new plant(s) for producing Schedule 3 chemicals. To eliminate any uncertainty concerning whether or not a change in a single type of information identified in Section 714.4(a) (*e.g.*, the ''purpose'' of Schedule 3 chemical production) would require submission of an amendment, BIS clarified the language in Section 714.4(a) of the proposed rule by revising the phrase, ''You must submit an amended declaration or report to BIS within 15 days of any change in the following information * * *,'' in the introductory text of paragraph (a), to read, ''You must submit an amended declaration or report to BIS within 15 days of determining that there has been a change in any of the following information that you have previously declared or reported * * *''. BIS also clarified that section by replacing the word ''and,'' at the end of paragraph (a)(3), with the word ''or.'' These changes to Section 714.4(a) clearly indicate that a change in any one of the four types of information listed therein would require the submission of an amendment to BIS within 15 days from the date that a company determines such a change has occurred. For example, if a plant site declares consumption (''In-line consumption as produced (captive use)'') of a Schedule 3 chemical as the only ''purpose'' of production in its declaration on past activities, but later learns that the chemical was also sold to another company in the United States, the plant site must submit an amendment to its declaration, declaring the additional end-use (*i.e.*, transfer to another company or industry), within 15 days of having determined that the chemical was transferred, as well as consumed.

Note: In contrast to the amendment requirements in Section 714.4(a) of the CWCR, Section 714.3(a)(2) states that a ''Declaration on Additionally Planned Activities'' is not required to change

anticipated end-use(s) of a chemical (*i.e.*, purposes of production), unless there are other anticipated changes that must be declared, as specified in Section 714.3(a)(1)(i) through (a)(1)(iv) of the CWCR (*e.g.*, the addition of a previously undeclared plant or chemical).

D. Sections 713.5(b)(5) and 714.4(b) ''Changes to Export or Import Information Submitted in Annual Reports on Exports and Imports From Undeclared Plant Sites, Trading Companies and U.S. Persons''

Comments: Two respondents commented on the proposed end-use information requirements in Sections 713.5(b)(5) and 714.4(b)(5) of the CWCR, as they apply to changes to Schedule 2 and Schedule 3 annual reports previously submitted to BIS. One respondent noted that the CWCR do not require that information on end-use be included in an Annual Report of Exports or Imports. Both respondents asked BIS to indicate whether the end-use information requirements in Sections 713.5(b)(5) and 714.4(b)(5) of the CWCR were added to these sections in error or, if they were added intentionally, to clarify the purpose of the requirements.

Response: BIS has determined that the requirement to submit end-use information was inadvertently included in sections 714.4 and 713.5 of the CWCR and has removed the requirement from both of these sections.

E. Section 716.3(a) ''Consent to Inspections; Warrants for Inspections''

Comments: One respondent stated that the regulations should provide companies with the option of giving ''advance consent'' to routine and challenge inspections, as set forth in sections 716 and 717 of the CWCR, respectively. The respondent stated that such advance consent would become effective upon issuance by the U.S. National Authority (USNA) of a written notification of inspection, as specified in Section 716.5(a)(2) of the CWCR. The respondent suggested that this option should allow the owner to choose whether to have the advance consent expire at the end of a specified period of time or to have no expiration date. To implement this option, the respondent suggested that BIS could include an ''advance consent'' provision in the annual declaration form that would allow the individual completing the form to check the appropriate boxes to indicate whether or not ''advance consent'' is given and, if so, whether that consent will expire at a specified time or have no expiration date. Alternatively, the respondent suggests that ''advance consent'' could be indicated by submission of a letter from the owner to BIS that would provide ''advance consent.'' The respondent stated that this mode of consent would not diminish any rights under the rule to withdraw consent at any time.

Response: Section 305(a) of the Chemical Weapons Convention Implementation Act (CWCIA) requires the United States Government to ''seek the consent of the owner or the owner, operator, occupant, or agent in charge of the premises to be inspected prior to any inspection * * *'' (See 22 U.S.C. 6701, 6725, Pub. L. 105–277, Section 305(a)). BIS has made a conservative interpretation of this requirement and therefore seeks actual consent from the authorized owner, operator or agent in charge, after notification, prior to every inspection. We have adopted this interpretation to ensure that the rights bestowed on the public by the CWCIA are fully addressed. Accordingly, BIS will not adopt a method for the submission of advance consent to inspections.

F. Section 716.4(b)(1) ''Description of Inspections''

Comments: One respondent stated that the use of the word ''may,'' in the context of the areas that can be included in a visual inspection, creates uncertainty with regard to those areas of a facility that are subject to inspection and those that are not. The respondent stated that visual inspection of areas outside the declared plant site should be required only if there are no other means of clarifying an ambiguity. The respondent asserted that BIS should provide clarification in Section 716 of the CWCR, or at least in the preamble to the final rule, concerning which areas of the declared plant and plant site will be subject to visual inspection and which areas may be subject to visual inspection. The respondent also suggested that BIS should provide a more detailed explanation in Section 716 about managed access and other protections that may apply to inspections.

Response: BIS cannot provide a list of areas that will be or may be subject to visual inspection because each inspection is conducted differently within the limits of the CWC and the Act. As the representative of the United States (Inspected State Party), the Host Team Leader is responsible, as described in section 716.4(b)(2), for determining whether the Inspection Team's request to inspect any area, building, item or record is reasonable. Such determinations are made by the Host Team Leader on the basis of treaty requirements. Verification activities are carried out at declared ''plant sites.'' The CWC states that the focus of inspections shall be the declared plant (see CWC Part VII paragraph 25, Part VIII paragraph 20, and Part IX paragraph 17 for Schedule 2, Schedule 3 and UDOC inspections, respectively). These activities are further described in the CWCR. Access to other parts of a plant site are provided in a manner sufficient to clarify, to the satisfaction of the Inspection Team, any ambiguities that arise during an inspection. Managed access is a means through which access to other parts of a plant site is controlled, and it cannot be narrowly defined.

G. Section 716.4(b)(2) ''Scope of Consent''

Comments: One respondent stated that there is no mention of the facility's role in determining whether or not an Inspection Team's request for access is reasonable. The respondent stated that input from the inspected facility is crucial to any determination made by the Host Team with regard to access and other inspection activities. The respondent, therefore, suggested that Section 716.4(b)(2) should be revised to read as follows:

> ''The Host Team Leader will make the determination of whether the Inspection Team's request to inspect any area, building, item or record is reasonable after consultation with the owner, operator, occupant or agent in charge of a facility.''

Response: The Host Team Leader, as the representative of the United States during an inspection, has the sole responsibility for determining whether a request made by the Inspection Team is reasonable and necessary. The inspection being conducted at the facility is a U.S. Government-led inspection and therefore any interaction with the Inspection Team or decisions made regarding the conduct of the inspection are wholly within the province and authority of the U.S. Government. As a courtesy, BIS has made it a practice to consult with the facility prior to making these decisions. However, there is no obligation on the part of the U.S. Government to follow the instruction of, or await comment from, the facility when considering an Inspection Team request. Therefore, BIS will not revise section 716.4 to reflect the respondent's requested language.

H. Section 716.4(b)(3) ''ITAR Controlled Technology''

Comments: One respondent stated that, in order to maximize the protection of technology controlled for export under the International Traffic in Arms

Regulations (ITAR) (22 CFR 120–130), the first sentence of this section should be revised to read as follows:

''ITAR-controlled technology cannot be divulged to the Inspection Team without U.S. Government (USG) authorization regardless of the nationalities of the Inspection Team members.''

Response: A key role for BIS, during CWC inspections of facilities, is to ensure that these inspections are conducted in a manner that does not adversely impact facility compliance with the requirements of the International Traffic in Arms Regulations (ITAR), which are administered by the U.S. Department of State. The terms under which members of the Inspection Team may have access to ITAR-controlled technology and information are subject to the provisions of those regulations and the instructions given to the Department of Commerce by the Department of State. The language proposed by the respondent would materially affect the implementation of those ITAR provisions and, therefore, will not be incorporated into the CWCR.

Comments: Another respondent stated that the procedures through which the U.S. Government authorizes the release of ITAR technology during CWC inspections are unclear. The respondent requested that BIS clarify the procedures (if any) for authorizing the release of such technology.

Response: The CWCR do not alter the ITAR provisions or procedures (22 CFR 120–130) as they apply to the transfer of technology to foreign nationals. Procedurally, if there is no approval from the U.S. Department of State or its duly designated U.S. Government representative for disclosure of ITAR technology during an inspection, such technology cannot be disclosed.

I. Section 716.4(e) ''Records Review''

Comments: Two respondents commented on the requirement in Section 716.4(e) of the CWCR that, whenever the current owner of a declared facility does not have access to records for activities that took place under a previous owner of the facility, the previous owner must make such records available to the Host Team, for provision to the Inspection Team. One of the respondents said that, if contractually, records were transferred to the new owners of a facility subject to the CWCR, the previous owners should not be obligated to maintain duplicates of those records. Both respondents stated that this section of the CWCR appeared to impose an indefinite recordkeeping obligation upon former owners of declared facilities who were no longer subject to the CWCR and suggested that BIS should amend this section of the CWCR to clarify that, under any circumstances where the previous owner is obligated to maintain records, the five-year retention period described in Section 721.2(b) of the CWCR would apply.

Response: Section 716.4(e) of the CWCR does not obligate the previous owner of a declared facility to maintain duplicates of records that were contractually transferred to the new owner of the facility. The company that legally owns the records after the sale is responsible for retaining the records and making them available for inspection. Accordingly, there is no duplication of recordkeeping. Section 721.2(b) establishes a five year retention period for all supporting materials and documentation related to compliance with the CWCR, so there are no open-ended record keeping obligations under the CWCR. However, in order to clarify the recordkeeping requirements that apply to previous owners of declared facilities, BIS is amending Section 716.4(e) to expressly indicate that, ''if a facility does not have access to records for activities that took place under previous ownership, because such records were not transferred to the current owner of the facility by the previous owner (*e.g.*, as part of the contract involving the sale of the facility), the previous owner must make such records available to the Host Team for provision to the Inspection Team * * *.'' The current owner of a facility, upon receiving notification of an inspection, would be responsible for informing BIS if the previous owner did not transfer records for activities that took place under the previous ownership—this will allow BIS to contact the previous owner of the facility, to arrange for access to such records, if BIS deems them relevant to the inspection activities. BIS is also amending Section 721.2(a) of the CWCR, consistent with the clarifications to Section 716.4, to specify that ''in the event that a declared facility is sold, the previous owner of the facility must retain all * * * supporting materials and documentation that were not transferred to the current owner of the facility (*e.g.*, as part of the contract involving the sale of the facility)—otherwise, the current owner of the facility is responsible for retaining such supporting materials and documentation.'' In addition, if the previous owner of a declared facility decides to retain such supporting materials and documentation, the owner must inform BIS of any subsequent change in address or other contact information, so that BIS will be able to contact the previous owner, to arrange for access to the records, in the event that BIS deems them relevant to inspection activities involving the facility.

J. Section 716.10 ''Post-Inspection Activities''

Comments: Two respondents stated that the CWCR do not provide a time frame for the submission of a facility's comments on a final inspection report from the OPCW. The respondents suggested that BIS establish a time frame that coincides with the deadline for the submission of inspection-related amendments (45 calendar days).

Response: The respondents were correct in noting that the CWCR do not establish a specific deadline for an inspected facility to submit comments on a final inspection report. The CWC requires that State Parties submit comments on a final inspection report, to the Director-General of the Technical Secretariat of the OPCW, not later than 30 days following the completion of an inspection. As a courtesy, BIS has provided companies with the opportunity to review and comment on the inspection report, but is under no obligation to await or incorporate such comments in the final submission to the OPCW. However, BIS notes the utility of a deadline for the submission of comments by facilities on the final inspection report. Therefore, BIS has amended the CWCR to allow inspected facilities a minimum of 7 working days, from the time they receive a copy of the final inspection report, to submit their comments on the report.

K. Part 717 ''Challenge inspections''

Comments: The same respondent, who commented on adding a provision that would allow companies to supply advance consent for routine inspections (see comments on Section 716.3(a), above), suggested that BIS should also provide for advance consent to challenge inspections.

Response: For the reasons stated in its response to the respondent's comments on Section 716.3(a) of the CWCR, BIS will not amend the CWCR to provide for the submission of advance consent to challenge inspections. (For further discussion of the basis for this decision, see the BIS response to the comments received for Section 716.3(a), above.)

L. Section 717.2(a) and (b) ''Warrants'' and ''Notification of Challenge Inspection''

Comments: One respondent stated that the challenge inspection procedures in Part 717 of the proposed CWCR do not contain provisions analogous to the initial/routine inspection procedures in either Section 716.3(a), which states that the owner, operator, or agent in charge of a facility may consent to an inspection, or Section 716.5(a)(1)(ii), which provides that BIS's inspection notification will include a request that the facility indicate whether it will consent to an inspection. The respondent noted that, while obtaining the consent of the owner, operator, or agent in charge of a facility to an inspection is not expressly stated in Part 717, it is implied because Section 717.2(a) of the proposed rule indicates that failure to provide consent will result in the issuance of a criminal warrant. The respondent felt that part 717 of the proposed rule creates ambiguity and uncertainty, because it does not expressly indicate whether or how BIS would request a facility's consent to an inspection, and suggested that the following sentences be added to Sections 717.2(a) and 717.2(b)(2)(ii):

Section 717.2(a)—''The owner, operator, occupant or agent in charge of a facility may consent to a challenge inspection. The individual giving consent on behalf of the facility represents that he or she has the authority to make this decision for the facility.''

Section 717.2(b)(2)(ii)—''In addition to appropriate information provided by the OPCW in its notification to the USNA, BIS's inspection notification to the facility will request that the facility indicate whether it will consent to an inspection and will state whether an advance team is available to assist the site in preparation for the inspection.''

Response: BIS has amended Sections 717.2(a) and 717.2(b)(2)(ii) of the CWCR to expressly indicate that BIS will request the owner, operator, or agent in charge of a facility to provide consent prior to a challenge inspection of the facility.

M. Typographical Errors

Comment: One respondent indicated that there were two typographical errors in the Supplementary Information part of the CWCR proposed rule, under Part I (''Summary of CWCR Changes Contained in This Proposed Rule''), section (G), titled ''Proposed Amendments to Part 713 of the CWCR (Activities Involving Schedule 2 Chemicals).'' The respondent stated that BIS should add an ''s'' to the word ''prohibit,'' in the second sentence of the first paragraph under section (G), and delete the word ''not'' from the phrase ''not packaged for retail sale for personal use,'' in the last sentence of the second paragraph under section (G).

Response: The word ''prohibit,'' in the second sentence of the first paragraph in section (G), is intended to modify ''Chemical Weapons Convention Regulations.'' Because the word ''regulations'' is plural, the use of the word ''prohibit'' is appropriate in this sentence. BIS has amended the last sentence of the second paragraph in section (G) by removing the word ''not'' from the phrase ''not packaged for retail sale for personal use.''

Rulemaking Requirements

1. This final rule has been determined to be significant for purposes of E.O. 12866.

2. Notwithstanding any other provision of law, no person is required to respond to, nor shall any person be subject to a penalty for failure to comply with, a collection of information subject to the Paperwork Reduction Act of 1995 (44 U.S.C. 3501 *et seq.*) (PRA), unless that collection of information displays a currently valid Office of Management and Budget (OMB) Control Number. This rule revises an existing collection of information subject to the requirements of the PRA. This collection has been approved by OMB under Control Number 0694–0091 (Chemical Weapons Convention—Declaration and Report Forms), which carries burden hour estimates of 10.6 hours for Schedule 1 Chemicals, 11.9 hours for Schedule 2 chemicals, 2.5 hours for Schedule 3 chemicals, 5.3/5.1 for unscheduled discrete organic chemicals, and 0.17 hours for Schedule 1 notifications. This rule adds a new Section 711.3 to the Chemical Weapons Convention Regulations (CWCR) that authorizes BIS to contact any facility to request information concerning production, processing, consumption, export, import, or other activities involving scheduled chemicals and UDOCs, described in Parts 712 through 715 of the CWCR, in order to determine whether or not the facility is in compliance with the CWCR. This new requirement applies to all persons and facilities that are subject to the reporting or declaration provisions of the CWCR, as set forth in Part 721. The total estimated annual burden hours for the compliance reviews authorized under new Section 711.3 would be 85 hours and the total estimated annual cost would be $3,236.46. This rule also adds a new requirement for the submission of amendments (to previously submitted declarations and reports) resulting from inspection findings. The total estimated annual burden hours for this new amendment requirement would be 112 hours and the total estimated annual cost would be $4,267. Note that the estimated burden hours and cost for inspection related amendments are already included in the information collection authorization from OMB. Therefore, to avoid double counting the information, it does not appear as a separate line item under the revision to the information collection for this final rule. Finally, this rule adds a new reporting form, entitled ''No Changes Authorization Form,'' for UDOC facilities to use, if appropriate, for certifying that there are no changes to the information declared in a UDOC facility's prior year's annual declaration on past activities. This new form will reduce industry's estimated annual burden by 15 hours and $571.50. Note that, like the information related to inspection-related amendments, the estimated burden hours and cost for implementing the ''No Changes Authorization Form'' are included in a prior information collection authorization from OMB. In conclusion, the total estimated annual burden hours for declarations, reports, amendments, and requests for compliance-related information under this final rule will increase from 4401 burden hours to 4471 burden hours.

The changes made by this rule are addressed under two separate information collection submissions.

Comments are invited on: (i) Whether the collection of information is necessary for the functions of the agency, including whether the information shall have practical utility; (ii) the accuracy of the agency's estimate of the information collection burden; (iii) ways to enhance the quality, utility, and clarity of the information to be collected; and (iv) ways to minimize the burden of the collection on respondents, including through the use of automated collection techniques or other forms of information technology.

Send comments regarding this burden estimate or any other aspect of this collection of information, including suggestions for reducing the burden, to David Rostker, Office of Management and Budget (OMB), by e-mail to *David_Rostker@omb.eop.gov,* or by fax to (202) 395–7285; and to the Regulatory Policy Division, Bureau of Industry and Security, Department of Commerce, P.O. Box 273, Washington, DC 20044.

3. This rule does not contain policies with Federalism implications as that term is defined in Executive Order 13132.

4. The Regulatory Flexibility Act (RFA), as amended by the Small Business Regulatory Enforcement Fairness Act of 1996 (SBREFA), 5 U.S.C. 601 *et seq.*, generally requires an agency to prepare a regulatory flexibility analysis of any rule subject to the notice and comment rulemaking requirements under the Administrative Procedure Act (5 U.S.C. 553) or any other statute, unless the agency certifies that the rule will not have a significant economic impact on a substantial number of small entities. Under section 605(b) of the RFA, however, if the head of an agency certifies that a rule will not have a significant economic impact on a substantial number of small entities, the statute does not require the agency to prepare a regulatory flexibility analysis. Pursuant to section 605(b), the Chief Counsel for Regulations, Department of Commerce, certified to the Chief Counsel for Advocacy, Small Business Administration, that the promulgation of this final rule will not have a significant economic impact on a substantial number of small entities for the reasons explained below. Consequently, BIS has not prepared a regulatory flexibility analysis.

Small entities include small businesses, small organizations and small governmental jurisdictions. For purposes of assessing the impacts of this final rule on small entities, small entity is defined as: (1) A small business according to RFA default definitions for small business (based on SBA size standards), (2) a small governmental jurisdiction that is a government of a city, county, town, school district or special district with a population of less than 50,000, and (3) a small organization that is any not-for-profit enterprise which is independently owned and operated and is not dominant in its field. BIS has determined that this final rule would affect only the first category of small entities (*i.e.*, small businesses). The President reported to the Congress, in December 2003, as required under section 309 of the CWC Implementation Act, that 297 U.S. companies representing 691 facilities, plant sites, and trading companies were subject to the declaration and reporting requirements under the Chemical Weapons Convention Regulations (CWCR). Although BIS estimates that the majority of these 297 companies are substantially sized businesses, having more than 500 employees, BIS does not have sufficient information on these companies to definitively characterize them as large entities. The Small Business Administration (SBA) has established standards for what constitutes a small business, with respect to each of the Standard Industrial Classification (SIC) code categories for ''Chemicals and Allied Products.'' However, BIS is not able to determine which of these SIC code categories apply to the companies that are subject to the declaration, reporting, advance notification, recordkeeping or inspection requirements of this rule. Therefore, for the purpose of assessing the impact of this final rule, BIS assumes that the 297 companies are small entities.

Although this final rule will affect a substantial number of small entities (*i.e.*, 297 companies), the additional recordkeeping and reporting requirements imposed by this rule will not have a significant economic impact on these entities.

First, this rule adds a new section 711.3 that authorizes BIS to contact any facility to determine whether or not it is in compliance with the CWCR. The information that BIS is authorized to request concerns production, processing, consumption, export, import, or other activities involving scheduled chemicals and UDOCs described in parts 712 through 715 of the CWCR. This new requirement applies to all persons and facilities subject to the reporting or declaration provisions of the CWCR, as set forth in part 721. The total estimated annual burden hours for the compliance reviews authorized under new section 711.3 would be 85 hours and the total estimated annual cost would be $3,236.46.

Second, this rule adds a new requirement for the submission of amendments (to previously submitted declarations and reports) resulting from inspection findings. The total estimated annual burden hours for the new amendment requirement would be 112 hours and the total estimated annual cost would be $4,267.

Finally, this rule adds a new reporting form, entitled ''No Changes Authorization Form,'' for UDOC facilities to use, if appropriate, for certifying that there are no changes to the information declared in a UDOC facility's prior year's annual declaration on past activities. This new form will reduce industry's estimated annual burden by 15 hours and $571.50.

The total estimated increase in annual burden hours to implement the additional recordkeeping and reporting requirements described above would be 197 burden hours and the total estimated annual cost would be $7,503.46. The total cost of these recordkeeping and reporting requirements would represent only a small percentage of the revenues generated by the affected companies. Although this final rule will affect a substantial number of small entities (i.e., 297 companies), the total economic impact on the affected entities (i.e., $7,503.46) will not be significant. Since the revisions that this rule makes to the CWCR will not impose a significant economic impact on a substantial number of small entities, BIS did not prepare a regulatory flexibility analysis for this rule.

Finally, the changes made by this rule should be viewed in light of the fact that BIS's discretion in formulating the declaration, reporting and advance notification, and recordkeeping requirements of the CWCR is limited by the Chemical Weapons Convention (the Convention). The Organization for the Prohibition of Chemical Weapons (OPCW) has issued forms for States Parties to use for declarations. In drafting the CWCR requirements and the forms for U.S. persons to use, BIS has consistently interpreted the Convention's requirements as narrowly as possible to ensure that only information that the United States National Authority must declare to the OPCW is to be submitted to BIS. Other States Parties, such as Canada, have imposed much broader reporting requirements on their industries, with the government taking on the responsibility of determining which of the information collected must be declared to the OPCW. In addition, certain declaration requirements of the Convention are subject to interpretation by States Parties. Until the Conference of States Parties establishes clear rules for these requirements, States Parties may use their ''national discretion'' to implement them. ''National discretion'' generally means a reasonable interpretation of the requirement. For requirements currently subject to ''national discretion,'' BIS has adopted in this rule the minimum requirements consistent with a reasonable reading of the Convention, keeping in mind its purposes and objectives.

List of Subjects

15 CFR Part 710

Chemicals, Exports, Foreign Trade, Imports, Treaties.

15 CFR Part 711

Chemicals, Confidential business information, Reporting and recordkeeping requirements.

15 CFR Part 712

Chemicals, Exports, Foreign Trade, Imports, Reporting and recordkeeping requirements.

15 CFR Part 713

Chemicals, Exports, Foreign Trade, Imports, Reporting and recordkeeping requirements.

15 CFR Part 714

Chemicals, Exports, Foreign Trade, Imports, Reporting and recordkeeping requirements.

15 CFR Part 715

Chemicals, Exports, Foreign Trade, Imports, Reporting and recordkeeping requirements.

15 CFR Part 716

Chemicals, Confidential business information, Reporting and recordkeeping requirements, Search warrant, Treaties.

15 CFR Part 717

Chemicals, Confidential business information, Reporting and recordkeeping requirements, Search warrant, Treaties.

15 CFR Part 718

Confidential business information, Reporting and recordkeeping requirements.

15 CFR Part 719

Administrative proceedings, Exports, Imports, Penalties, Violations.

15 CFR Part 720

Penalties, violations.

15 CFR Part 721

Reporting and recordkeeping requirements.

■ Accordingly, the Chemical Weapons Convention Regulations, 15 CFR, chapter VII, subchapter B, parts 710 through 722, are revised to read as follows:

PART 710—GENERAL INFORMATION AND OVERVIEW OF THE CHEMICAL WEAPONS CONVENTION REGULATIONS (CWCR)

Sec.
710.1 Definitions of terms used in the Chemical Weapons Convention Regulations (CWCR).
710.2 Scope of the CWCR.
710.3 Purposes of the Convention and CWCR.
710.4 Overview of scheduled chemicals and examples of affected industries.
710.5 Authority.
710.6 Relationship between the Chemical Weapons Convention Regulations and the Export Administration Regulations, the International Traffic in Arms Regulations, and the Alcohol, Tobacco, Firearms, and Explosives Regulations.
Supplement No. 1 to Part 710—States Parties to the Convention on the Prohibition of the Development, Production, Stockpiling and Use of Chemical Weapons and on Their Destruction
Supplement No. 2 to Part 710—Definitions of Production

Authority: 22 U.S.C. 6701 *et seq.*; E.O. 13128, 64 FR 36703, 3 CFR 1999 Comp., p. 199.

§ 710.1 Definitions of terms used in the Chemical Weapons Convention Regulations (CWCR).

The following are definitions of terms used in the CWCR (parts 710 through 729 of this subchapter, unless otherwise noted):

Act (The). Means the Chemical Weapons Convention Implementation Act of 1998 (22 U.S.C. 6701 *et seq.*).

Advance Notification. Means a notice informing BIS of a company's intention to export to or import from a State Party a Schedule 1 chemical. This advance notification must be submitted to BIS at least 45 days prior to the date of export or import (except for transfers of 5 milligrams or less of saxitoxin for medical/diagnostic purposes, which must be submitted to BIS at least 3 days prior to export or import). BIS will inform the company in writing of the earliest date the shipment may occur under the advance notification procedure. This advance notification requirement is imposed in addition to any export license requirements under the Department of Commerce's Export Administration Regulations (15 CFR parts 730 through 799) or the Department of State's International Traffic in Arms Regulations (22 CFR parts 120 through 130) or any import license requirements under the Department of Justice's Bureau of Alcohol, Tobacco, Firearms and Explosives Regulations (27 CFR part 447).

Bureau of Industry and Security (BIS). Means the Bureau of Industry and Security of the United States Department of Commerce, including Export Administration and Export Enforcement.

By-product. Means any chemical substance or mixture produced without a separate commercial intent during the manufacture, processing, use or disposal of another chemical substance or mixture.

Chemical Weapon. Means the following, together or separately:

(1) Toxic chemicals and their precursors, except where intended for purposes not prohibited under the Chemical Weapons Convention (CWC), provided that the type and quantity are consistent with such purposes;

(2) Munitions and devices, specifically designed to cause death or other harm through the toxic properties of those toxic chemicals specified in paragraph (1) of this definition, which would be released as a result of the employment of such munitions and devices;

(3) Any equipment specifically designed for use directly in connection with the employment of munitions or devices specified in paragraph (2) of this definition.

Chemical Weapons Convention (CWC or Convention). Means the Convention on the Prohibition of the Development, Production, Stockpiling and Use of Chemical Weapons and on Their Destruction, and its annexes opened for signature on January 13, 1993.

Chemical Weapons Convention Regulations (CWCR). Means the regulations contained in 15 CFR parts 710 through 729.

Consumption. Consumption of a chemical means its conversion into another chemical via a chemical reaction. Unreacted material must be accounted for as either waste or as recycled starting material.

Declaration or report form. Means a multi-purpose form to be submitted to BIS regarding activities involving Schedule 1, Schedule 2, Schedule 3, or unscheduled discrete organic chemicals. Declaration forms will be used by facilities that have data declaration obligations under the CWCR and are ''declared'' facilities whose facility-specific information will be transmitted to the OPCW. Report forms will be used by entities that are ''undeclared'' facilities or trading companies that have limited reporting requirements for only export and import activities under the CWCR and whose facility-specific information will not be transmitted to the OPCW. Information from declared facilities, undeclared facilities and trading companies will also be used to compile U.S. national aggregate figures on the production, processing, consumption, export and import of specific chemicals. See also related definitions of declared facility, undeclared facility and report.

Declared facility or plant site. Means a facility or plant site that submits declarations of activities involving Schedule 1, Schedule 2, Schedule 3, or unscheduled discrete organic chemicals above specified threshold quantities.

Discrete organic chemical. Means any chemical belonging to the class of chemical compounds consisting of all compounds of carbon, except for its

oxides, sulfides, and metal carbonates, identifiable by chemical name, by structural formula, if known, and by Chemical Abstract Service registry number, if assigned. (Also see the definition for unscheduled discrete organic chemical.)

Domestic transfer. Means, with regard to declaration requirements for Schedule 1 chemicals under the CWCR, any movement of any amount of a Schedule 1 chemical outside the geographical boundary of a facility in the United States to another destination in the United States, for any purpose. Also means, with regard to declaration requirements for Schedule 2 and Schedule 3 chemicals under the CWCR, movement of a Schedule 2 or Schedule 3 chemical in quantities and concentrations greater than specified thresholds, outside the geographical boundary of a facility in the United States, to another destination in the United States, for any purpose. Domestic transfer includes movement between two divisions of one company or a sale from one company to another. Note that any movement to or from a facility outside the United States is considered an export or import for reporting purposes, not a domestic transfer. (Also see definition of United States.)

EAR. Means the Export Administration Regulations (15 CFR parts 730–799).

Explosive. Means a chemical (or a mixture of chemicals) that is included in Class 1 of the United Nations Organization hazard classification system.

Facility. Means any plant site, plant or unit.

Facility Agreement. Means a written agreement or arrangement between a State Party and the Organization relating to a specific facility subject to on-site verification pursuant to Articles IV, V, and VI of the Convention.

Host Team. Means the U.S. Government team that accompanies the inspection team from the Organization for the Prohibition of Chemical Weapons during a CWC inspection for which the regulations in the CWCR apply.

Host Team Leader. Means the representative from the Department of Commerce who heads the U.S. Government team that accompanies the Inspection Team during a CWC inspection for which the regulations in the CWCR apply.

Hydrocarbon. Means any organic compound that contains only carbon and hydrogen.

Impurity. Means a chemical substance unintentionally present with another chemical substance or mixture.

Inspection Notification. Means a written announcement to a plant site by the United States National Authority (USNA) or the BIS Host Team of an impending inspection under the Convention.

Inspection Site. Means any facility or area at which an inspection is carried out and which is specifically defined in the respective facility agreement or inspection request or mandate or inspection request as expanded by the alternative or final perimeter.

Inspection Team. Means the group of inspectors and inspection assistants assigned by the Director-General of the Technical Secretariat to conduct a particular inspection.

Intermediate. Means a chemical formed through chemical reaction that is subsequently reacted to form another chemical.

ITAR. Means the International Traffic in Arms Regulations (22 CFR parts 120–130).

Organization for the Prohibition of Chemical Weapons (OPCW). Means the international organization, located in The Hague, the Netherlands, that administers the CWC.

Person. Means any individual, corporation, partnership, firm, association, trust, estate, public or private institution, any State or any political subdivision thereof, or any political entity within a State, any foreign government or nation or any agency, instrumentality or political subdivision of any such government or nation, or other entity located in the United States.

Plant. Means a relatively self-contained area, structure or building containing one or more units with auxiliary and associated infrastructure, such as:

(1) Small administrative area;

(2) Storage/handling areas for feedstock and products;

(3) Effluent/waste handling/treatment area;

(4) Control/analytical laboratory;

(5) First aid service/related medical section; and

(6) Records associated with the movement into, around, and from the site, of declared chemicals and their feedstock or product chemicals formed from them, as appropriate.

Plant site. Means the local integration of one or more plants, with any intermediate administrative levels, which are under one operational control, and includes common infrastructure, such as:

(1) Administration and other offices;

(2) Repair and maintenance shops;

(3) Medical center;

(4) Utilities;

(5) Central analytical laboratory;

(6) Research and development laboratories;

(7) Central effluent and waste treatment area; and

(8) Warehouse storage.

Precursor. Means any chemical reactant which takes part, at any stage in the production, by whatever method, of a toxic chemical. The term includes any key component of a binary or multicomponent chemical system.

Processing. Means a physical process such as formulation, extraction and purification in which a chemical is not converted into another chemical.

Production. Means the formation of a chemical through chemical reaction, including biochemical or biologically mediated reaction (see Supplement No. 2 to this part).

(1) Production of Schedule 1 chemicals means formation through chemical synthesis as well as processing to extract and isolate Schedule 1 chemicals.

(2) Production of a Schedule 2 or Schedule 3 chemical means all steps in the production of a chemical in any units within the same plant through chemical reaction, including any associated processes (e.g., purification, separation, extraction, distillation, or refining) in which the chemical is not converted into another chemical. The exact nature of any associated process (e.g., purification, etc.) is not required to be declared.

Production by synthesis. Means production of a chemical from its reactants.

Protective purposes in relation to Schedule 1 chemicals. Means any purpose directly related to protection against toxic chemicals and to protection against chemical weapons. Further means the Schedule 1 chemical is used for determining the adequacy of defense equipment and measures.

Purposes not prohibited by the CWC. Means the following:

(1) Any peaceful purpose related to an industrial, agricultural, research, medical or pharmaceutical activity or other activity;

(2) Any purpose directly related to protection against toxic chemicals and to protection against chemical weapons;

(3) Any military purpose of the United States that is not connected with the use of a chemical weapon and that is not dependent on the use of the toxic or poisonous properties of the chemical weapon to cause death or other harm; or

(4) Any law enforcement purpose, including any domestic riot control

purpose and including imposition of capital punishment.

Report. Means information due to BIS on exports and imports of Schedule 1, Schedule 2 or Schedule 3 chemicals above applicable thresholds. Such information is included in the national aggregate declaration transmitted to the OPCW. Facility-specific information is not included in the national aggregate declaration. Note: This definition does not apply to parts 719 and 720 of the CWCR (see the definition of ''report'' in § 719.1(b) of the CWCR).

Schedules of Chemicals. Means specific lists of toxic chemicals, groups of chemicals, and precursors contained in the CWC. See Supplements No. 1 to parts 712 through 714 of the CWCR.

State Party. Means a country for which the CWC is in force. See Supplement No. 1 to this part.

Storage. For purposes of Schedule 1 chemical reporting, means any quantity that is not accounted for under the categories of production, export, import, consumption or domestic transfer.

Technical Secretariat. Means the organ of the OPCW charged with carrying out administrative and technical support functions for the OPCW, including carrying out the verification measures delineated in the CWC.

Toxic Chemical. Means any chemical which, through its chemical action on life processes, can cause death, temporary incapacitation, or permanent harm to humans or animals. The term includes all such chemicals, regardless of their origin or of their method of production, and regardless of whether they are produced in facilities, in munitions, or elsewhere. Toxic chemicals that have been identified for the application of verification measures are in schedules contained in Supplements No. 1 to parts 712 through 714 of the CWCR.

Trading company. Means any person involved in the export and/or import of scheduled chemicals in amounts greater than specified thresholds, but not in the production, processing or consumption of such chemicals in amounts greater than threshold amounts requiring declaration. If such persons exclusively export or import scheduled chemicals in amounts greater than specified thresholds, they are subject to reporting requirements but are not subject to routine inspections. Such persons must be the principal party in interest of the exports or imports and may not delegate CWC reporting responsibilities to a forwarding or other agent.

Transfer. See domestic transfer.

Transient intermediate. Means any chemical which is produced in a chemical process but, because it is in a transition state in terms of thermodynamics and kinetics, exists only for a very short period of time, and cannot be isolated, even by modifying or dismantling the plant, or altering process operating conditions, or by stopping the process altogether.

Undeclared facility or plant site. Means a facility or plant site that is not subject to declaration requirements because of past or anticipated production, processing or consumption involving scheduled or unscheduled discrete organic chemicals above specified threshold quantities. However, such facilities and plant sites may have a reporting requirement for exports or imports of such chemicals.

Unit. Means the combination of those items of equipment, including vessels and vessel set up, necessary for the production, processing or consumption of a chemical.

United States. Means the several States of the United States, the District of Columbia, and the commonwealths, territories, and possessions of the United States, and includes all places under the jurisdiction or control of the United States, including any of the places within the provisions of paragraph (41) of section 40102 of Title 49 of the United States Code, any civil aircraft of the United States or public aircraft, as such terms are defined in paragraphs (1) and (37), respectively, of section 40102 of Title 49 of the United States Code, and any vessel of the United States, as such term is defined in section 3(b) of the Maritime Drug Enforcement Act, as amended (section 1903(b) of Title 46 App. of the United States Code).

United States National Authority (USNA). Means the Department of State serving as the national focal point for the effective liaison with the Organization for the Prohibition of Chemical Weapons and other States Parties to the Convention and implementing the provisions of the Chemical Weapons Convention Implementation Act of 1998 in coordination with an interagency group designated by the President consisting of the Secretary of Commerce, Secretary of Defense, Secretary of Energy, the Attorney General, and the heads of other agencies considered necessary or advisable by the President, or their designees. The Secretary of State is the Director of the USNA.

Unscheduled chemical. Means a chemical that is not contained in Schedule 1, Schedule 2, or Schedule 3 (see Supplements No. 1 to parts 712 through 714 of the CWCR).

Unscheduled Discrete Organic Chemical (UDOC). Means any ''discrete organic chemical'' that is not contained in the Schedules of Chemicals (see Supplements No. 1 to parts 712 through 714 of the CWCR) and subject to the declaration requirements of part 715 of the CWCR. Unscheduled discrete organic chemicals subject to declaration under the CWCR are those produced by synthesis that are isolated for use or sale as a specific end-product.

You. The term ''you'' or ''your'' means any person (see also definition of ''person''). With regard to the declaration and reporting requirements of the CWCR, ''you'' refers to persons that have an obligation to report certain activities under the provisions of the CWCR.

§ 710.2 Scope of the CWCR.

The Chemical Weapons Convention Regulations (parts 710 through 729 of this subchapter), or CWCR, implement certain obligations of the United States under the Convention on the Prohibition of the Development, Production, Stockpiling and Use of Chemical Weapons and on Their Destruction, known as the CWC or Convention.

(a) *Persons and facilities subject to the CWCR.* (1) The CWCR apply to all persons and facilities located in the United States, except the following U.S. Government facilities:

(i) Department of Defense facilities;

(ii) Department of Energy facilities; and

(iii) Facilities of other U.S. Government agencies that notify the USNA of their decision to be excluded from the CWCR.

(2) For purposes of the CWCR, ''United States Government facilities'' are those facilities owned and operated by a U.S. Government agency (including those operated by contractors to the agency), and those facilities leased to and operated by a U.S. Government agency (including those operated by contractors to the agency). ''United States Government facilities'' do not include facilities owned by a U.S. Government agency and leased to a private company or other entity such that the private company or entity may independently decide for what purposes to use the facilities.

(b) *Activities subject to the CWCR.* The activities subject to the CWCR (parts 710 through 729 of this subchapter) are activities, including production, processing, consumption, exports and imports, involving chemicals further described in parts 712 through 715 of the CWCR. These do not include activities involving inorganic

chemicals other than those listed in the Schedules of Chemicals, or other specifically exempted unscheduled discrete organic chemicals.

§ 710.3 Purposes of the Convention and CWCR.

(a) *Purposes of the Convention.* (1) The Convention imposes upon the United States, as a State Party, certain declaration, inspection, and other obligations. In addition, the United States and other States Parties to the Convention undertake never under any circumstances to:

(i) Develop, produce, otherwise acquire, stockpile, or retain chemical weapons, or transfer, directly or indirectly, chemical weapons to anyone;

(ii) Use chemical weapons;

(iii) Engage in any military preparations to use chemical weapons; or

(iv) Assist, encourage or induce, in any way, anyone to engage in any activity prohibited by the Convention.

(2) One objective of the Convention is to assure States Parties that lawful activities of chemical producers and users are not converted to unlawful activities related to chemical weapons. To achieve this objective and to give States Parties a mechanism to verify compliance, the Convention requires the United States and all other States Parties to submit declarations concerning chemical production, consumption, processing and other activities, and to permit international inspections within their borders.

(b) *Purposes of the Chemical Weapons Convention Regulations.* To fulfill the United States' obligations under the Convention, the CWCR (parts 710 through 729 of this subchapter) prohibit certain activities, and compel the submission of information from all facilities in the United States, except for Department of Defense and Department of Energy facilities and facilities of other U.S. Government agencies that notify the USNA of their decision to be excluded from the CWCR on activities, including exports and imports of scheduled chemicals and certain information regarding unscheduled discrete organic chemicals as described in parts 712 through 715 of the CWCR. U.S. Government facilities are those owned by or leased to the U.S. Government, including facilities that are contractor-operated. The CWCR also require access for on-site inspections and monitoring by the OPCW, as described in parts 716 and 717 of the CWCR.

§ 710.4 Overview of scheduled chemicals and examples of affected industries.

The following provides examples of the types of industries that may be affected by the CWCR (parts 710 through 729 of this subchapter). These examples are not exhaustive, and you should refer to parts 712 through 715 of the CWCR to determine your obligations.

(a) Schedule 1 chemicals are listed in Supplement No. 1 to part 712 of the CWCR. Schedule 1 chemicals have little or no use in industrial and agricultural industries, but may have limited use for research, pharmaceutical, medical, public health, or protective purposes.

(b) Schedule 2 chemicals are listed in Supplement No. 1 to part 713 of the CWCR. Although Schedule 2 chemicals may be useful in the production of chemical weapons, they also have legitimate uses in areas such as:

(1) Flame retardant additives and research;

(2) Dye and photographic industries (*e.g.*, printing ink, ball point pen fluids, copy mediums, paints, etc.);

(3) Medical and pharmaceutical preparation (*e.g.*, anticholinergics, arsenicals, tranquilizer preparations);

(4) Metal plating preparations;

(5) Epoxy resins; and

(6) Insecticides, herbicides, fungicides, defoliants, and rodenticides.

(c) Schedule 3 chemicals are listed in Supplement No. 1 to part 714 of the CWCR. Although Schedule 3 chemicals may be useful in the production of chemical weapons, they also have legitimate uses in areas such as:

(1) The production of:

(i) Resins;

(ii) Plastics;

(iii) Pharmaceuticals;

(iv) Pesticides;

(v) Batteries;

(vi) Cyanic acid;

(vii) Toiletries, including perfumes and scents;

(viii) Organic phosphate esters (*e.g.*, hydraulic fluids, flame retardants, surfactants, and sequestering agents); and

(2) Leather tannery and finishing supplies.

(d) Unscheduled discrete organic chemicals are used in a wide variety of commercial industries, and include acetone, benzoyl peroxide and propylene glycol.

§ 710.5 Authority.

The CWCR (parts 710 through 729 of this subchapter) implement certain provisions of the Chemical Weapons Convention under the authority of the Chemical Weapons Convention Implementation Act of 1998 (Act), the National Emergencies Act, the International Emergency Economic Powers Act (IEEPA), as amended, and the Export Administration Act of 1979, as amended, by extending verification and trade restriction requirements under Article VI and related parts of the Verification Annex of the Convention to U.S. persons. In Executive Order 13128 of June 25, 1999, the President delegated authority to the Department of Commerce to promulgate regulations to implement the Act, and consistent with the Act, to carry out appropriate functions not otherwise assigned in the Act but necessary to implement certain reporting, monitoring and inspection requirements of the Convention and the Act.

§ 710.6 Relationship between the Chemical Weapons Convention Regulations and the Export Administration Regulations, the International Traffic in Arms Regulations, and the Alcohol, Tobacco, Firearms and Explosives Regulations.

Certain obligations of the U.S. Government under the CWC pertain to exports and imports. The obligations on exports are implemented in the Export Administration Regulations (EAR) (15 CFR parts 730 through 799) and the International Traffic in Arms Regulations (ITAR) (22 CFR parts 120 through 130). See in particular §§ 742.2 and 742.18 and part 745 of the EAR, and Export Control Classification Numbers 1C350, 1C351, 1C355 and 1C395 of the Commerce Control List (Supplement No. 1 to part 774 of the EAR). The obligations on imports are implemented in the Chemical Weapons Convention Regulations (§§ 712.2 and 713.1) and the Alcohol, Tobacco, Firearms and Explosives Regulations in 27 CFR part 447.

Supplement No. 1 to Part 710—States Parties to the Convention on the Prohibition of the Development, Production, Stockpiling, and Use of Chemical Weapons and on Their Destruction

List of States Parties as of March 25, 2006

Afghanistan
Albania
Algeria
Andorra
Antigua and Barbuda
Argentina
Armenia
Australia
Austria
Azerbaijan
Bahrain
Bangladesh
Belarus
Belgium
Belize
Benin
Bhutan

Bolivia
Bosnia-Herzegovina
Botswana
Brazil
Brunei Darussalam*
Bulgaria
Burkina Faso
Burundi
Cambodia
Cameroon
Canada
Cape Verde
Chad
Chile
China***
Colombia
Congo (Democratic Republic of the)
Cook Islands**
Costa Rica
Cote d'Ivoire (Ivory Coast)
Croatia
Cuba
Cyprus
Czech Republic
Denmark
Djibouti
Dominica
Ecuador
El Salvador
Equatorial Guinea
Eritrea
Estonia
Ethiopia
Fiji
Finland
France
Gabon
Gambia
Georgia
Germany
Ghana
Greece
Grenada
Guatemala
Guinea
Guyana
Haiti
Holy See*
Honduras
Hungary
Iceland
India
Indonesia
Iran (Islamic Republic of)
Ireland
Italy
Jamaica
Japan
Jordan
Kazakhstan
Kenya
Kiribati
Korea (Republic of)
Kuwait
Kyrgyzstan
Laos (P.D.R.)*
Latvia
Lesotho
Liberia
Libya
Liechtenstein
Lithuania
Luxembourg
Macedonia (The Former Yugoslav Republic of)
Madagascar
Malawi
Malaysia
Maldives
Mali
Malta
Marshall Islands
Mauritania
Mauritius
Mexico
Micronesia (Federated States of)
Moldova (Republic of)*
Monaco
Mongolia
Morocco
Mozambique
Namibia
Nauru
Nepal
Netherlands***
New Zealand
Nicaragua
Niger
Nigeria
Niue**
Norway
Oman
Pakistan
Palau
Panama
Papua New Guinea
Paraguay
Peru
Philippines
Poland
Portugal
Qatar
Romania
Russian Federation
Rwanda
Saint Kitts and Nevis
Saint Lucia
Saint Vincent and the Grenadines
Samoa
San Marino
Sao Tome and Principe
Saudi Arabia
Senegal
Serbia and Montenegro
Seychelles
Sierra Leone
Singapore
Slovak Republic*
Slovenia
Solomon Islands
South Africa
Spain
Sri Lanka
Sudan
Suriname
Swaziland
Sweden
Switzerland
Tajikistan
Tanzania, United Republic of
Thailand
Timor Leste (East Timor)
Togo
Tonga
Trinidad and Tobago
Tunisia
Turkey
Turkmenistan
Tuvalu
Uganda
Ukraine
United Arab Emirates
United Kingdom
United States
Uruguay
Uzbekistan
Vanuatu
Venezuela
Vietnam
Yemen
Zambia
Zimbabwe

* For export control purposes, these destinations are identified using a different nomenclature under the Commerce Country Chart in Supplement No. 1 to part 738 of the Export Administration Regulations (EAR) (15 CFR parts 730–799).

** For export control purposes, Cook Islands and Niue are not identified on the Commerce Country Chart in Supplement No. 1 to part 738 of the EAR and are treated the same as New Zealand, in accordance with § 738.3(b) of the EAR.

*** For CWC States Parties purposes, a territory, possession, or department of any country that is listed in this Supplement as a State Party to the CWC, is treated the same as the country of which it is a territory, possession, or department (*e.g.*, China includes Hong Kong and Macau; the Netherlands includes Aruba and the Netherlands Antilles).

SUPPLEMENT NO. 2 TO PART 710.—DEFINITIONS OF PRODUCTION

Schedule 1 chemicals	Schedule 2 and Schedule 3 chemicals	Unscheduled discrete organic chemicals (UDOCs)
Produced by a biochemical or biologically mediated reaction		Produced by synthesis*
Formation through chemical synthesis. Processing to extract and isolate Schedule 1 chemicals.	All production steps in any units within the same plant which includes associated processes—purification, separation, extraction distillation or refining.**	

* Intermediates used in a single or multi-step process to produce another declared UDOC are not declarable.

** Intermediates are subject to declaration, except ''transient intermediates,'' which are those chemicals in a transition state in terms of thermodynamics and kinetics, that exist only for a very short period of time, and cannot be isolated, even by modifying or dismantling the plant, or by altering process operating conditions, or by stopping the process altogether are not subject to declaration.

PART 711—GENERAL INFORMATION REGARDING DECLARATION, REPORTING, AND ADVANCE NOTIFICATION REQUIREMENTS, AND THE ELECTRONIC FILING OF DECLARATIONS AND REPORTS

Sec.
711.1 Overviews of declaration, reporting, and advance notification requirements.
711.2 Who submits declarations, reports, and advance notifications?
711.3 Compliance review.
711.4 Assistance in determining your obligations.
711.5 Numerical precision of submitted data.
711.6 Where to obtain forms.
711.7 Where to submit declarations, reports, and advance notifications.
711.8 How to request authorization from BIS to make electronic submissions of declarations or reports.

Authority: 22 U.S.C. 6701 *et seq.*; E.O. 13128, 64 FR 36703, 3 CFR 1999 Comp., p. 199.

§ 711.1 Overviews of declaration, reporting, and advance notification requirements.

Parts 712 through 715 of the CWCR (parts 710 through 729 of this subchapter) describe the declaration, advance notification and reporting requirements for Schedule 1, 2 and 3 chemicals and for unscheduled discrete organic chemicals (UDOCs). For each type of chemical, the Convention requires annual declarations. If, after reviewing parts 712 through 715 of the CWCR, you determine that you have declaration, advance notification or reporting requirements, you may obtain the appropriate forms by contacting the Bureau of Industry and Security (BIS) (see § 711.6 of the CWCR).

§ 711.2 Who submits declarations, reports, and advance notifications.

The owner, operator, or senior management official of a facility subject to declaration, reporting, or advance notification requirements under the CWCR (parts 710 through 729 of this subchapter) is responsible for the submission of all required documents in accordance with all applicable provisions of the CWCR.

§ 711.3 Compliance review.

Periodically, BIS will request information from persons and facilities subject to the CWCR to determine compliance with the reporting, declaration and notification requirements set forth herein. Information requested may relate to the production, processing, consumption, export, import, or other activities involving scheduled chemicals and unscheduled discrete organic chemicals described in parts 712 through 715 of the CWCR. Any person or facility subject to the CWCR and receiving such a request for information will be required to provide a response to BIS within 30 working days of receipt of the request. This requirement does not, in itself, impose a requirement to create new records or maintain existing records in a manner other than that directed by the recordkeeping provisions set forth in part 721 of the CWCR.

§ 711.4 Assistance in determining your obligations.

(a) *Determining if your chemical is subject to declaration, reporting or advance notification requirements.* (1) If you need assistance in determining if your chemical is classified as a Schedule 1, Schedule 2, or Schedule 3 chemical, or is an unscheduled discrete organic chemical, submit your written request for a chemical determination to BIS. Such requests may be sent via facsimile to (703) 605–4425, e-mailed to *cdr@cwc.gov,* or mailed to the Treaty Compliance Division, Bureau of Industry and Security, U.S. Department of Commerce, 1555 Wilson Boulevard, Suite 700, Arlington, Virginia 22209–2405, and must be marked, ''ATTN: Chemical Determination.'' Your request should include the information noted in paragraph (a)(2) of this section to ensure an accurate determination. Also include any additional information that you feel is relevant to the chemical or process involved (see part 718 of the CWCR for provisions regarding treatment of confidential business information). If you are unable to provide all of the information required in paragraph (a)(2) of this section, you should include an explanation identifying the reasons or deficiencies that preclude you from supplying the information. If BIS cannot make a determination based upon the information submitted, BIS will return the request to you and identify the additional information that is necessary to complete a chemical determination. BIS will provide a written response to your chemical determination request within 10 working days of receipt of the request.

(2) Include the following information in each chemical determination request:

(i) Date of request;

(ii) Company name and complete street address;

(iii) Point of contact;

(iv) Phone and facsimile number of contact;

(v) E-mail address of contact, if you want an acknowledgment of receipt sent via e-mail;

(vi) Chemical Name;

(vii) Structural formula of the chemical, if the chemical is not specifically identified by name and chemical abstract service registry number in Supplements No. 1 to parts 712 through 714 of the CWCR; and

(viii) Chemical Abstract Service registry number, if assigned.

(b) *Other inquiries.* If you need assistance in interpreting the provisions of the CWCR or need assistance with declaration, forms, reporting, advance notification, inspection or facility agreement issues, contact BIS's Treaty Compliance Division by phone at (703) 605–4400. If you require a response from BIS in writing, submit a detailed request to BIS that explains your question, issue, or request. Send the request to the address or facsimile included in paragraph (a) of this section, or e-mail the request to *cwcqa@cwc.gov.* Your request must be marked, ''ATTN: CWCR Assistance.''

§ 711.5 Numerical precision of submitted data.

Numerical information submitted in declarations and reports is to be provided per applicable rounding rules in each part (*i.e.*, parts 712 through 715 of the CWCR) with a precision equal to that which can be reasonably provided using existing documentation, equipment, and measurement techniques.

§ 711.6 Where to obtain forms.

(a) Forms to complete declarations and reports required by the CWCR may be obtained by contacting: Treaty Compliance Division, Bureau of Industry and Security, U.S. Department of Commerce, 1555 Wilson Blvd., Suite 700, Arlington, VA 22209–2405, Telephone: (703) 605–4400. Forms and forms software may also be downloaded from the Internet at www.cwc.gov.

(b) If the amount of information you are required to submit is greater than the given form will allow, multiple copies of forms may be submitted.

§ 711.7 Where to submit declarations, reports and advanced notifications.

Declarations, reports and advance notifications required by the CWCR

must be sent to: Treaty Compliance Division, Bureau of Industry and Security, U.S. Department of Commerce, 1555 Wilson Blvd., Suite 700, Arlington, VA 22209–2405, Telephone: (703) 605–4400. Advanced notifications may also be sent by facsimile to (703) 235–1481. Specific types of declarations and reports and due dates are outlined in Supplement No. 2 to parts 712 through 715 of the CWCR.

§ 711.8 How to request authorization from BIS to make electronic submissions of declarations or reports.

(a) *Scope.* This section provides an optional method of submitting declarations or reports. Specifically, this section applies to the electronic submission of declarations and reports required under the CWCR. If you choose to submit declarations and reports by electronic means, all such electronic submissions must be made through the Web-Data Entry System for Industry (Web-DESI), which can be accessed on the CWC web site at www.cwc.gov.

(b) *Authorization.* If you or your company has a facility, plant site, or trading company that has been assigned a U.S. Code Number (USC Number), you may submit declarations and reports electronically, once you have received authorization from BIS to do so. An authorization to submit declarations and reports electronically may be limited or withdrawn by BIS at any time. There are no prerequisites for obtaining permission to submit electronically, nor are there any limitations with regard to the types of declarations or reports that are eligible for electronic submission. However, BIS may direct, for any reason, that any electronic declaration or report be resubmitted in writing, either in whole or in part.

(1) *Requesting approval to submit declarations and reports electronically.* To submit declarations and reports electronically, you or your company must submit a written request to BIS at the address identified in § 711.6 of the CWCR. Both the envelope and letter must be marked, ''ATTN: Electronic Declaration or Report Request.'' Your request should be on company letterhead and must contain your name or the company's name, your mailing address at the company, the name of the facility, plant site or trading company and its U.S. Code Number, the address of the facility, plant site or trading company (this address may be different from the mailing address), the list of persons who are authorized to view, edit, and/or submit declarations and reports on behalf of your company, and the telephone number and name and title of the owner, operator, or senior management official responsible for certifying that each person listed in the request is authorized to view, edit, and/or submit declarations and reports on behalf of you or your company (*i.e.*, the certifying official). Additional information required for submitting electronic declarations and reports may be found on BIS's Web site at *www.cwc.gov.* Once you have completed and submitted the necessary certifications, BIS will review your request for authorization to view, edit, and/or submit declarations and reports electronically. BIS will notify you if additional information is required and/or upon completion of its review.

Note to § 711.8(b)(1): You must submit a separate request for each facility, plant site or trading company owned by your company (*e.g.*, each site that is assigned a unique U.S. Code Number).

(2) *Assignment and use of passwords for facilities, plant sites and trading companies (USC password) and Web-DESI user accounts (user name and password).* (i) Each person, facility, plant site or trading company authorized to submit declarations and reports electronically will be assigned a password (USC password) that must be used in conjunction with the U.S.C. Number. Each person authorized by BIS to view, edit, and/or submit declarations and reports electronically for a facility, plant site or trading company will be assigned a Web-DESI user account (user name and password) telephonically by BIS. A Web-DESI user account will be assigned to you only if your company has certified to BIS that you are authorized to act for it in viewing, editing, and/or submitting electronic declarations and reports under the CWCR.

Note to § 711.8(b)(2)(i): When persons must have access to multiple Web-DESI accounts, their companies must identify such persons on the approval request for each of these Web-DESI accounts. BIS will coordinate with such persons to ensure that the assigned user name and password is the same for each account.

(ii) Your company may reveal the facility, plant site or trading company password (USC password) only to Web-DESI users with valid passwords, their supervisors, and employees or agents of the company with a commercial justification for knowing the password.

(iii) If you are an authorized Web-DESI account user, you may not:

(A) Disclose your user name or password to anyone;

(B) Record your user name or password, either in writing or electronically;

(C) Authorize another person to use your user name or password; or

(D) Use your user name or password following termination, either by BIS or by your company, of your authorization or approval for Web-DESI use.

(iv) To prevent misuse of the Web-DESI account:

(A) If Web-DESI user account information (i.e., user name and password) is lost, stolen or otherwise compromised, the company and the user must report the loss, theft or compromise of the user account information, immediately, by calling BIS at (703) 235–1335. Within two business days of making the report, the company and the user must submit written confirmation to BIS at the address provided in § 711.6 of the CWCR.

(B) Your company is responsible for immediately notifying BIS whenever a Web-DESI user leaves the employ of the company or otherwise ceases to be authorized by the company to submit declarations and reports electronically on its behalf.

(v) No person may use, copy, appropriate or otherwise compromise a Web-DESI account user name or password assigned to another person. No person, except a person authorized access by the company, may use or copy the facility, plant site or trading company password (USC password), nor may any person steal or otherwise compromise this password.

(c) *Electronic submission of declarations and reports*—(1) *General instructions.* Upon submission of the required certifications and approval of the company's request to use electronic submission, BIS will provide instructions on both the method for transmitting declarations and reports electronically and the process for submitting required supporting documents, if any. These instructions may be modified by BIS from time to time.

(2) *Declarations and reports.* The electronic submission of a declaration or report will constitute an official document as required under parts 712 through 715 of the CWCR. Such submissions must provide the same information as written declarations and reports and are subject to the recordkeeping provisions of part 720 of the CWCR. The company and Web-DESI user submitting the declaration or report will be deemed to have made all representations and certifications as if the submission were made in writing by the company and signed by the certifying official. Electronic submission of a declaration or report will be

considered complete upon transmittal to BIS.

(d) *Updating.* A company approved for electronic submission of declarations or reports under Web-DESI must promptly notify BIS of any change in its name, ownership or address. If your company wishes to have a person added as a Web-DESI user, your company must inform BIS and follow the instructions provided by BIS. Your company should conduct periodic reviews to ensure that the company's designated certifying official and Web-DESI users are persons whose current responsibilities make it necessary and appropriate that they act for the company in either capacity.

PART 712—ACTIVITIES INVOLVING SCHEDULE 1 CHEMICALS

Sec.

712.1 Round to zero rule that applies to activities involving Schedule 1 chemicals.
712.2 Restrictions on activities involving Schedule 1 chemicals.
712.3 Initial declaration requirements for declared facilities which are engaged in the production of Schedule 1 chemicals for purposes not prohibited by the CWC.
712.4 New Schedule 1 production facility.
712.5 Annual declaration requirements for facilities engaged in the production of Schedule 1 chemicals for purposes not prohibited by the CWC.
712.6 Advance notification and annual report of all exports and imports of Schedule 1 chemicals to, or from, other States Parties.
712.7 Amended declaration or report.
712.8 Declarations and reports returned without action by BIS.
712.9 Deadlines for submission of Schedule 1 declarations, reports, advance notifications, and amendments.
Supplement No. 1 to Part 712—Schedule 1 Chemicals
Supplement No. 2 to Part 712—Deadlines for Submission of Schedule 1 Declarations, Reports, Advance Notifications, Reports, and Amendments

Authority: 22 U.S.C. 6701 *et seq.*; 50 U.S.C. 1601 *et seq.*; 50 U.S.C. 1701 *et seq.*; E.O. 12938, 59 FR 59099, 3 CFR, 1994 Comp., p. 950, as amended by E.O. 13094, 63 FR 40803, 3 CFR, 1998 Comp., p. 200; E.O. 13128, 64 FR 36703, 3 CFR 1999 Comp., p. 199.

§ 712.1 Round to zero rule that applies to activities involving Schedule 1 chemicals.

Facilities that produce, export or import mixtures containing less than 0.5% aggregate quantities of Schedule 1 chemicals (see Supplement No. 1 to this part) as unavoidable by-products or impurities may round to zero and are not subject to the provisions of this part 712. Schedule 1 content may be calculated by volume or weight, whichever yields the lesser percent. Note that such mixtures may be subject to the regulatory requirements of other federal agencies.

§ 712.2 Restrictions on activities involving Schedule 1 chemicals.

(a) You may not produce Schedule 1 chemicals for protective purposes.

(b) You may not import any Schedule 1 chemical unless:

(1) The import is from a State Party;

(2) The import is for research, medical, pharmaceutical, or protective purposes;

(3) The import is in types and quantities strictly limited to those that can be justified for such purposes; and

(4) You have notified BIS at least 45 calendar days prior to the import, pursuant to § 712.6 of the CWCR.

Note 1 to § 712.2(b): Pursuant to § 712.6, advance notifications of import of saxitoxin of 5 milligrams or less for medical/diagnostic purposes must be submitted to BIS at least 3 days prior to import.

Note 2 to § 712.2(b): For specific provisions relating to the prior advance notification of exports of all Schedule 1 chemicals, see § 745.1 of the Export Administration Regulations (EAR) (15 CFR parts 730 through 799). For specific provisions relating to license requirements for exports of Schedule 1 chemicals, see § 742.2 and § 742.18 of the EAR for Schedule 1 chemicals subject to the jurisdiction of the Department of Commerce and see the International Traffic in Arms Regulations (22 CFR parts 120 through 130) for Schedule 1 chemicals subject to the jurisdiction of the Department of State.

(c)(1) The provisions of paragraphs (a) and (b) of this section do not apply to the retention, ownership, possession, transfer, or receipt of a Schedule 1 chemical by a department, agency, or other entity of the United States, or by a person described in paragraph (c)(2) of this section, pending destruction of the Schedule 1 chemical;

(2) A person referred to in paragraph (c)(1) of this section is:

(i) Any person, including a member of the Armed Forces of the United States, who is authorized by law or by an appropriate officer of the United States to retain, own, possess transfer, or receive the Schedule 1 chemical; or

(ii) In an emergency situation, any otherwise non-culpable person if the person is attempting to seize or destroy the Schedule 1 chemical.

§ 712.3 Initial declaration requirements for declared facilities which are engaged in the production of Schedule 1 chemicals for purposes not prohibited by the CWC.

Initial declarations submitted in February 2000 remain valid until amended or rescinded. If you plan to change/amend the technical description of your facility submitted with your initial declaration, you must submit an amended initial declaration to BIS 200 calendar days prior to implementing the change (see § 712.5(b)(1)(ii) of the CWCR).

§ 712.4 New Schedule 1 production facility.

(a) *Establishment of a new Schedule 1 production facility.* (1) If your facility has never before been declared under § 712.5 of the CWCR, or the initial declaration for your facility has been withdrawn pursuant to § 712.5(g) of the CWCR, and you intend to begin production of Schedule 1 chemicals at your facility in quantities greater than 100 grams aggregate per year for research, medical, or pharmaceutical purposes, you must provide an initial declaration (with a current detailed technical description of your facility) to BIS in no less than 200 calendar days in advance of commencing such production. Such facilities are considered to be ''new Schedule 1 production facilities'' and are subject to an initial inspection within 200 calendar days of submitting an initial declaration.

(2) New Schedule 1 production facilities that submit an initial declaration pursuant to paragraph (a)(1) of this section are considered approved Schedule 1 production facilities for purposes of the CWC, unless otherwise notified by BIS within 30 days of receipt by BIS of that initial declaration.

(b) *Types of declaration forms required.* If your new Schedule 1 production facility will produce in excess of 100 grams aggregate of Schedule 1 chemicals, you must complete the Certification Form, Form 1–1 and Form A. You must also provide a detailed technical description of the new facility or its relevant parts, and a detailed diagram of the declared areas in the facility.

(c) Two hundred days after a new Schedule 1 production facility submits its initial declaration, it is subject to the declaration requirements in § 712.5(a)(1) and (a)(2) and § 712.5(b)(1)(ii) of the CWCR.

§ 712.5 Annual declaration requirements for facilities engaged in the production of Schedule 1 chemicals for purposes not prohibited by the CWC.

(a) *Declaration requirements*—(1) *Annual declaration on past activities.* You must complete the forms specified in paragraph (b)(2) of this section if you produced at your facility in excess of 100 grams aggregate of Schedule 1 chemicals in the previous calendar year. As a declared Schedule 1 facility, in addition to declaring the production of each Schedule 1 chemical that

comprises your aggregate production of Schedule 1 chemicals, you must also declare any Schedule 1, Schedule 2, or Schedule 3 precursor used to produce the declared Schedule 1 chemical. You must further declare each Schedule 1 chemical used (consumed) and stored at your facility, and domestically transferred from your facility during the previous calendar year, whether or not you produced that Schedule 1 chemical at your facility.

(2) *Annual declaration on anticipated activities.* You must complete the forms specified in paragraph (b)(3) of this section if you anticipate that you will produce at your facility more than 100 grams aggregate of Schedule 1 chemicals in the next calendar year. If you are not already a declared facility, you must complete an initial declaration (see § 712.4 of the CWCR) 200 calendar days before commencing operations or increasing production which will result in production of more than 100 grams aggregate of Schedule 1 chemicals.

(b) *Declaration forms to be used*—(1) *Initial declaration.* (i) You must have completed the Certification Form, Form 1–1 and Form A if you produced at your facility in excess of 100 grams aggregate of Schedule 1 chemicals in calendar years 1997, 1998, or 1999. You must have provided a detailed current technical description of your facility or its relevant parts including a narrative statement, and a detailed diagram of the declared areas in the facility.

(ii) If you plan to change the technical description of your facility from your initial declaration completed and submitted pursuant to § 712.3 or § 712.4 of the CWCR, you must submit an amended initial declaration to BIS 200 calendar days prior to the change. Such amendments to your initial declaration must be made by completing a Certification Form, Form 1–1 and Form A, including the new description of the facility. See § 712.7 of the CWCR for additional instructions on amending Schedule 1 declarations.

(2) *Annual declaration on past activities.* If you are subject to the declaration requirement of paragraph (a)(1) of this section, you must complete the Certification Form and Forms 1–1, 1–2, 1–2A, 1–2B, and Form A if your facility was involved in the production of Schedule 1 chemicals in the previous calendar year. Form B is optional.

(3) *Annual declaration on anticipated activities.* If you anticipate that you will produce at your facility in excess of 100 grams aggregate of Schedule 1 chemicals in the next calendar year you must complete the Certification Form and Forms 1–1, 1–4, and Form A. Form B is optional.

(c) *Quantities to be declared.* If you produced in excess of 100 grams aggregate of Schedule 1 chemicals in the previous calendar year, you must declare the entire quantity of such production, rounded to the nearest gram. You must also declare the quantity of any Schedule 1, Schedule 2 or Schedule 3 precursor used to produce the declared Schedule 1 chemical, rounded to the nearest gram. You must further declare the quantity of each Schedule 1 chemical consumed or stored by, or domestically transferred from, your facility, whether or not the Schedule 1 chemical was produced by your facility, rounded to the nearest gram. In calculating the amount of Schedule 1 chemical you produced, consumed or stored, count only the amount of the Schedule 1 chemical(s) in a mixture, not the total weight of the mixture (i.e., do not count the weight of the solution, solvent, or container).

(d) For the purpose of determining if a Schedule 1 chemical is subject to declaration, you must declare a Schedule 1 chemical that is an intermediate, but not a transient intermediate.

(e) *''Declared'' Schedule 1 facilities and routine inspections.* Only facilities that submitted a declaration pursuant to paragraph (a)(1) or (a)(2) of this section or § 712.4 of the CWCR are considered ''declared'' Schedule 1 facilities. A ''declared'' Schedule 1 facility is subject to initial and routine inspection by the OPCW (see part 716 of the CWCR).

(f) *Approval of declared Schedule 1 production facilities.* Facilities that submit declarations pursuant to this section are considered approved Schedule 1 production facilities for purposes of the CWC, unless otherwise notified by BIS within 30 days of receipt by BIS of an annual declaration on past activities or annual declaration on anticipated activities (see paragraphs (a)(1) and (a)(2) of this section). If your facility does not produce more than 100 grams aggregate of Schedule 1 chemicals, no approval by BIS is required.

(g) *Withdrawal of Schedule 1 initial declarations.* A facility subject to §§ 712.3, 712.4 and 712.5 of the CWCR may withdraw its initial declaration at any time by notifying BIS in writing. A notification requesting the withdrawal of the initial declaration should be sent on company letterhead to the address in § 711.6 of the CWCR. BIS will acknowledge receipt of the withdrawal of the initial declaration. Facilities withdrawing their initial declaration may not produce subsequently in excess of 100 grams aggregate of Schedule 1 chemicals within a calendar year unless pursuant to § 712.4.

§ 712.6 Advance notification and annual report of all exports and imports of Schedule 1 chemicals to, or from, other States Parties.

Pursuant to the Convention, the United States is required to notify the OPCW not less than 30 days in advance of every export or import of a Schedule 1 chemical, in any quantity, to or from another State Party. In addition, the United States is required to provide a report of all exports and imports of Schedule 1 chemicals to or from other States Parties during each calendar year. If you plan to export or import any quantity of a Schedule 1 chemical from or to your declared facility, undeclared facility or trading company, you must notify BIS in advance of the export or import and complete an annual report of exports and imports that actually occurred during the previous calendar year. The United States will transmit to the OPCW the advance notifications and a detailed annual declaration of each actual export or import of a Schedule 1 chemical from/to the United States. Note that the advance notification and annual report requirements of this section do not relieve you of any requirement to obtain a license for export of Schedule 1 chemicals subject to the EAR or ITAR or a license for import of Schedule 1 chemicals from the Department of Justice under the Alcohol, Tobacco, Firearms and Explosives Regulations in 27 CFR part 447. Only ''declared'' facilities, as defined in § 712.5(e) of the CWCR, are subject to initial and routine inspections pursuant to part 716 of the CWCR.

(a) *Advance notification of exports and imports.* You must notify BIS at least 45 calendar days prior to exporting or importing any quantity of a Schedule 1 chemical, except for exports or imports of 5 milligrams or less of Saxitoxin—B (7)—for medical/diagnostic purposes, listed in Supplement No. 1 to this part to or from another State Party. Advance notification of export or import of 5 milligrams or less of Saxitoxin for medical/diagnostic purposes only, must be submitted to BIS at least 3 calendar days prior to export or import. Note that advance notifications for exports may be sent to BIS prior to or after submission of a license application to BIS for Schedule 1 chemicals subject to the EAR and controlled under ECCN 1C351 or to the Department of State for Schedule 1 chemicals controlled under the ITAR. Such advance notifications must be submitted separately from license applications.

(1) Advance notifications should be on company letterhead or must clearly identify the reporting entity by name of company, complete address, name of contact person and telephone and facsimile numbers, along with the following information:

(i) Chemical name;

(ii) Structural formula of the chemical;

(iii) Chemical Abstract Service (CAS) Registry Number;

(iv) Quantity involved in grams;

(v) Planned date of export or import;

(vi) Purpose (end-use) of export or import (i.e., research, medical, pharmaceutical, or protective purposes);

(vii) Name(s) of exporter and importer;

(viii) Complete street address(es) of exporter and importer;

(ix) U.S. export license or control number, if known; and

(x) Company identification number, once assigned by BIS.

(2) Send the advance notification by facsimile to (703) 235–1481 or to the following address for mail and courier deliveries: Treaty Compliance Division, Bureau of Industry and Security, Department of Commerce, 1555 Wilson Boulevard, Suite 700, Arlington, VA 22209–2405, Attn: ''Advance Notification of Schedule 1 Chemical [Export] [Import].''

(3) Upon receipt of the advance notification, BIS will inform the exporter or importer of the earliest date after which the shipment may occur under the advance notification procedure. To export a Schedule 1 chemical subject to an export license requirement either under the EAR or the ITAR, the exporter must have applied for and been granted a license (see § 742.2 and § 742.18 of the EAR, or the ITAR at 22 CFR parts 120 through 130).

(b) *Annual report requirements for exports and imports of Schedule 1 chemicals.* Any person subject to the CWCR that exported or imported any quantity of Schedule 1 chemical to or from another State Party during the previous calendar year has a reporting requirement under this section.

(1) *Annual report on exports and imports.* Declared and undeclared facilities, trading companies, and any other person subject to the CWCR that exported or imported any quantity of a Schedule 1 chemical to or from another State Party in a previous calendar year must submit an annual report on exports and imports.

(2) *Report forms to submit.*—(i) *Declared Schedule 1 facilities.* (A) If your facility declared production of a Schedule 1 chemical and you also exported or imported any amount of that same Schedule 1 chemical, you must report the export or import by submitting either:

(*1*) *Combined declaration and report.* Submit, along with your declaration, Form 1–3 for that same Schedule 1 chemical to be reported. Attach Form A, as appropriate; Form B is optional; or

(2) *Report.* Submit, separately from your declaration, a Certification Form, Form 1–1, and a Form 1–3 for each Schedule 1 chemical to be reported. Attach Form A, as appropriate; Form B is optional.

(B) If your facility declared production of a Schedule 1 chemical and exported or imported any amount of a different Schedule 1 chemical, you must report the export or import by submitting either:

(*1*) *Combined declaration and report.* Submit, along with your declaration, a Form 1–3 for each Schedule 1 chemical to be reported. Attach Form A, as appropriate; Form B is optional; or

(*2*) *Report.* Submit, separately from your declaration, a Certification Form, Form 1–1, and a Form 1–3 for each Schedule 1 chemical to be reported. Attach Form A, as appropriate; Form B is optional.

(ii) If you are an undeclared facility, trading company, or any other person subject to the CWCR, and you exported or imported any amount of a Schedule 1 chemical, you must report the export or import by submitting a Certification Form, Form 1–1, and a Form 1–3 for each Schedule 1 chemical to be reported. Attach Form A, as appropriate; Form B is optional.

(c) Paragraph (a) of this section does not apply to the activities and persons set forth in § 712.2(b) of the CWCR.

§ 712.7 Amended declaration or report.

In order for BIS to maintain accurate information on previously submitted facility declarations, including information necessary to facilitate inspection notifications and activities or to communicate declaration or report requirements, amended declarations or reports will be required under the following circumstances described in this section. This section applies only to annual declarations on past activities and annual reports on exports and imports submitted for the previous calendar year or annual declarations on anticipated activities covering the current calendar year, unless specified otherwise in a final inspection report.

(a) *Changes to information that directly affect inspection of a declared facility's Annual Declaration of Past Activities (ADPA) or Annual Declaration on Anticipated Activities (ADAA).* You must submit an amended declaration or report to BIS within 15 days of any change in the following information:

(1) Types of Schedule 1 chemicals produced (*e.g.*, additional Schedule 1 chemicals);

(2) Quantities of Schedule 1 chemicals produced;

(3) Activities involving Schedule 1 chemicals; and

(4) End-use of Schedule 1 chemicals (*e.g.*, additional end-use(s)).

(b) *Changes to export or import information submitted in Annual Reports on Exports and Imports from undeclared facilities, trading companies and U.S. persons.* You must submit an amended report or amended combined declaration and report for changes to export or import information within 15 days of any change in the following export or import information:

(1) Types of Schedule 1 chemicals exported or imported (*e.g.*, additional Schedule 1 chemicals);

(2) Quantities of Schedule 1 chemicals exported or imported;

(3) Destination(s) of Schedule 1 chemicals exported;

(4) Source(s) of Schedule 1 chemicals imported;

(5) Activities involving exports and imports of Schedule 1 chemicals; and

(6) End-use(s) of Schedule 1 chemicals exported or imported (*e.g.*, additional end-use(s)).

(c) *Changes to company and facility information previously submitted to BIS in the ADPA, the ADAA, and the Annual Report on Exports and Imports.*—(1) *Internal company changes.* You must submit an amended declaration or report to BIS within 30 days of any change in the following information:

(i) Name of declaration/report point of contact (D–POC), including telephone number, facsimile number, and e-mail address;

(ii) Name(s) of inspection point(s) of contact (I–POC), including telephone number(s), and facsimile number(s);

(iii) Company name (see § 712.7(c)(2) of the CWCR for other company changes);

(iv) Company mailing address;

(v) Facility name;

(vi) Facility owner, including telephone number, and facsimile number; and

(vii) Facility operator, including telephone number, and facsimile number.

(2) *Change in ownership of company or facility.* If you sold or purchased a declared facility or trading company, you must submit an amended declaration or report to BIS, either before the effective date of the change or

within 30 days after the effective date of the change. The amended declaration or report must include the following information:

(i) Information that must be submitted to BIS by the company selling a declared facility:

(A) Name of seller (*i.e.*, name of the company selling a declared facility);

(B) Name of the declared facility and U.S. Code Number for that facility;

(C) Name of purchaser (*i.e.*, name of the new company purchasing a declared facility) and identity of contact person for the purchaser, if known;

(D) Date of ownership transfer or change;

(E) Additional details on sale of the declared facility relevant to ownership or operational control over any portion of that facility (*e.g.*, whether the entire facility or only a portion of the declared facility has been sold to a new owner); and

(F) Details regarding whether the new owner will submit the next declaration or report for the entire calendar year during which the ownership change occurred, or whether the previous owner and new owner will submit separate declarations or reports for the periods of the calendar year during which each owned the facility or trading company.

(*1*) If the new owner is responsible for submitting the declaration or report for the entire current year, it must have in its possession the records for the period of the year during which the previous owner owned the facility.

(*2*) If the previous owner and new owner will submit separate declarations for the periods of the calendar year during which each owned the facility (''part-year declarations''), and if, at the time of transfer of ownership, the previous owner's activities are not above the declaration thresholds set forth in §§ 712.4 and 712.5 of the CWCR, the previous owner and the new owner must still submit declarations to BIS with the below threshold quantities indicated.

(*3*) If the part-year declarations submitted by the previous owner and the new owner are not, when combined, above the declaration threshold set forth in §§ 712.4 and 712.5 of the CWCR, BIS will return the declarations without action as set forth in § 712.8 of the CWCR.

(*4*) If part-year reports are submitted by the previous owner and the new owner as required in § 712.5 of the CWCR, BIS will submit both reports in the OPCW.

(ii) Information that must be submitted to BIS by the company purchasing a declared facility:

(A) Name of purchaser (*i.e.*, name of company purchasing a declared facility;

(B) Mailing address of purchaser;

(C) Name of declaration point of contact (D–POC) for the purchaser, including telephone number, facsimile number, and e-mail address;

(D) Name of inspection points of contact (I–POC) for the purchaser, including telephone number(s), facsimile number(s) and e-mail address(es);

(E) Name of the declared facility and U.S. Code Number for that facility;

(F) Location of the declared facility;

(G) Owner and operator of the declared facility, including telephone number, and facsimile number; and

(H) Details on the next declaration or report submission on whether the new owner will submit the declaration or report for the entire calendar year during which the ownership change occurred, or whether the previous owner and new owner will submit separate declarations or reports for the periods of the calendar year during which each owned the facility or trading company.

(*1*) If the new owner is taking responsibility for submitting the declaration or report for the entire current year, it must have in its possession the records for the period of the year during which the previous owner owned the facility.

(*2*) If the previous owner and new owner will submit separate declarations for the periods of the calendar year during which each owned the facility, and, at the time of transfer of ownership, the previous owner's activities are not above the declaration thresholds set forth in §§ 712.4 and 712.5 of the CWCR, the previous owner and the new owner must still submit declarations to BIS with the below threshold quantities indicated.

(*3*) If the part-year declarations submitted by the previous owner and the new owner are not, when combined, above the declaration threshold set forth in §§ 712.4 and 712.5 of the CWCR, BIS will return the declarations without action as set forth in § 712.8 of the CWCR.

(*4*) If part-year reports are submitted by the previous owner and the new owner as required in § 712.5 of the CWCR, BIS will submit both reports to the OPCW.

Note 1 to § 712.7(c): You must submit an amendment to your most recently submitted declaration or report for declaring changes to internal company information (*e.g.*, company name change) or changes in ownership of a facility or trading company that have occurred since the submission of this declaration or report. BIS will process the amendment to ensure current information is on file regarding the facility or trading company (*e.g.*, for inspection notifications and correspondence) and will also forward the amended declaration to the OPCW to ensure that they also have current information on file regarding your facility or trading company.

Note 2 to § 712.7(c): You may notify BIS of change in ownership via a letter to the address given in § 711.6 of the CWCR. If you are submitting an amended declaration or report, use Form B to address details regarding the sale of the declared facility or trading company.

Note 3 to § 712.7(c): For ownership changes, the declared facility or trading company will maintain its original U.S. Code Number, unless the facility or trading company is sold to multiple owners, at which time BIS will assign new U.S. Code Numbers for the new facilities.

(d) *Inspection-related amendments.* If, following completion of an inspection (see parts 716 and 717 of the CWCR), you are required to submit an amended declaration based on the final inspection report, BIS will notify you in writing of the information that will be required pursuant to §§ 716.10 and 717.5 of the CWCR. You must submit an amended declaration to BIS no later than 45 days following your receipt of the BIS post-inspection letter.

(e) *Non-substantive changes.* If, subsequent to the submission of your declaration or report to BIS, you discover one or more non-substantive typographical errors in your declaration or report, you are not required to submit an amended declaration or report to BIS. Instead, you may correct these errors in a subsequent declaration or report.

(f) *Documentation required for amended declarations or reports.* If you are required to submit an amended declaration or report to BIS pursuant to paragraph (a), (b), (c), or (d) of this section, you must submit either:

(1) A letter containing all of the corrected information required, in accordance with the provisions of this section, to amend your declaration or report; or

(2) Both of the following:

(i) A new Certification Form (*i.e.*, Form 1–1); and

(ii) The specific forms (*e.g.*, annual declaration on past activities) containing the corrected information required, in accordance with the provisions of this part 712, to amend your declaration or report.

§ 712.8 Declarations and reports returned without action by BIS.

If you submit a declaration or report and BIS determines that the information contained therein is not required by the

CWCR, BIS will return the original declaration or report to you, without action, accompanied by a letter explaining BIS's decision. In order to protect your confidential business information, BIS will not maintain a copy of any declaration or report that is returned without action (RWA). However, BIS will maintain a copy of the RWA letter.

§ 712.9 Deadlines for submission of Schedule 1 declarations, reports, advance notifications, and amendments.

Declarations, reports, advance notifications, and amendments required under this part must be postmarked by the appropriate date identified in Supplement No. 2 to this part 712. Required declarations, reports, advance notifications, and amendments include:

(a) Annual declaration on past activities (Schedule 1 chemical production during the previous calendar year);

(b) Annual report on exports and imports of Schedule 1 chemicals from facilities, trading companies, and other persons (during the previous calendar year);

(c) Combined declaration and report (production of Schedule 1 chemicals, as well as exports or imports of the same or different Schedule 1 chemicals, by a declared facility during the previous calendar year);

(d) Annual declaration on anticipated activities (anticipated production of Schedule 1 chemicals in the next calendar year);

(e) Advance notification of any export to or import from another State Party;

(f) Initial declaration of a new Schedule 1 chemical production facility; and

(g) Amended declaration or report, including combined declaration and report.

SUPPLEMENT NO. 1 TO PART 712.—SCHEDULE 1 CHEMICALS

	(CAS registry number)
A. Toxic chemicals:	
(1) O-Alkyl ($\leq C_{10}$, incl. cycloalkyl) alkyl (Me, Et, n-Pr or i-Pr)-phosphonofluoridates	
e.g. Sarin: O-Isopropyl methylphosphonofluoridate	(107–44–8)
Soman: O-Pinacolyl methylphosphonofluoridate	(96–64–0)
(2) O-Alkyl ($\leq C_{10}$, incl. cycloalkyl) N,N-dialkyl (Me, Et, n-Pr or i-Pr) phosphoramidocyanidates e.g. Tabun: O-Ethyl N,N-dimethyl phosphoramidocyanidate	(77–81–6)
(3) O-Alkyl (H or $\leq C_{10}$, incl. cycloalkyl) S–2-dialkyl (Me, Et, n-Pr or i-Pr)-aminoethyl alkyl (Me, Et, n-Pr or i-Pr) phosphonothiolates and corresponding alkylated or protonated salts e.g. VX: O-Ethyl S–2-diisopropylaminoethyl methyl phosphonothiolate	(50782–69–9)
(4) Sulfur mustards:	
2-Chloroethylchloromethylsulfide	(2625–76–5)
Mustard gas: Bis(2-chloroethyl)sulfide	(505–60–2)
Bis(2-chloroethylthio)methane	(63869–13–6)
Sesquimustard: 1,2-Bis(2-chloroethylthio)ethane	(3563–36–8)
1,3-Bis(2-chloroethylthio)-n-propane	(63905–10–2)
1,4-Bis(2-chloroethylthio)-n-butane	(142868–93–7)
1,5-Bis(2-chloroethylthio)-n-pentane	(142868–94–8)
Bis(2-chloroethylthiomethyl)ether	(63918–90–1)
O-Mustard: Bis(2-chloroethylthioethyl)ether	(63918–89–8)
(5) Lewisites:	
Lewisite 1: 2-Chlorovinyldichloroarsine	(541–25–3)
Lewisite 2: Bis(2-chlorovinyl)chloroarsine	(40334–69–8)
Lewisite 3: Tris(2-chlorovinyl)arsine	(40334–70–1)
(6) Nitrogen mustards:	
HN1: Bis(2-chloroethyl)ethylamine	(538–07–8)
HN2: Bis(2-chloroethyl)methylamine	(51–75–2)
HN3: Tris(2-chloroethyl)amine	(555–77–1)
(7) Saxitoxin	(35523–89–8)
(8) Ricin	(9009–86–3)
B. Precursors:	
(9) Alkyl (Me, Et, n-Pr or i-Pr) phosphonyldifluorides e.g. DF: Methylphosphonyldifluoride	(676–99–3)
(10) O-Alkyl (H or $\leq C_{10}$, incl. cycloalkyl) O–2-dialkyl (Me, Et, n-Pr or i-Pr)-aminoethyl alkyl (Me, Et, N-Pr or i-Pr) phosphonites and corresponding alkylated or protonated salts e.g. QL: O-Ethyl O–2-diisopropylaminoethyl methylphosphonite	(57856–11–8)
(11) Chlorosarin: O-Isopropyl methylphosphonochloridate	(1445–76–7)
(12) Chlorosoman: O-Pinacolyl methylphosphonochloridate	(7040–57–5)

Notes to Supplement No. 1

Note 1: Note that the following Schedule 1 chemicals are controlled for export purposes under the Export Administration Regulations (see part 774 of the EAR, the Commerce Control List): Saxitoxin (35523–89–8) and Ricin (9009–86–3).

Note 2: All Schedule 1 chemicals not listed in Note 1 to this Supplement are controlled for export purposes by the Directorate of Defense Trade Controls of the Department of State under the International Traffic in Arms Regulations (22 CFR parts 120 through 130).

SUPPLEMENT NO. 2 TO PART 712.—DEADLINES FOR SUBMISSION OF SCHEDULE 1 DECLARATIONS, ADVANCE NOTIFICATIONS, REPORTS, AND AMENDMENTS

Declarations, advance notifications and reports	Applicable forms	Due dates
Annual Declaration on Past Activities (previous calendar year)—Declared facility (past production).	Certification, 1–1, 1–2,1–2A,1–2B, A (as appropriate), B (optional).	February 28th of the year following any calendar year in which more than 100 grams aggregate of Schedule 1 chemicals were produced,

SUPPLEMENT NO. 2 TO PART 712.—DEADLINES FOR SUBMISSION OF SCHEDULE 1 DECLARATIONS, ADVANCE NOTIFICATIONS, REPORTS, AND AMENDMENTS—Continued

Declarations, advance notifications and reports	Applicable forms	Due dates
Annual report on exports and imports (previous calendar year) (facility, trading company, other persons).	Certification, 1–1,1–3, A (as appropriate), B (optional).	February 28th of the year following any calendar year in which Schedule 1 chemicals were exported or imported.
Combined Declaration and Report	Certification, 1–1, 1–2, 1–2A, 1–2B, 1–3, A (as appropriate), B (optional).	February 28th of the year following any calendar year in which Schedule 1 chemicals were produced, exported, or imported.
Annual Declaration of Anticipated Activities (next calendar year).	Certification, 1–1, 1–4, A (as appropriate), B (optional).	September 3rd of the year prior to any calendar year in which Schedule 1 activities are anticipated to occur.
Advance Notification of any export to or import from another State Party.	Notify on letterhead. See § 712.6 of the CWCR.	45 calendar days prior to any export or import of Schedule 1 chemicals, except 3 days prior to export or import of 5 milligrams or less of saxitoxin for medical/diagnositc purposes.
Initial Declaration of a new Schedule 1 facility (technical description).	Certification, 1–1, A (as appropriate), B (optional).	200 calendar days prior to producing in excess of 100 grams aggregate of Schedule 1 chemicals.
Amended Declaration	Certification, 1–1, 1–2, 1–2A.	
—Chemicals/Activities: § 712.7(a)		—15 calendar days after change in information.
—Company information: § 712.7(c)		—30 calendar days after change in information.
—Post-inspection letter: § 712.7(d)		—45 calendar days after receipt of letter.
Amended Report § 712.7(b)	Certification, 1–1, 1–3, A (as appropriate), B (optional).	—15 calendar days after change in information.
Amended Combined Declaration & Report	Certification, 1–1, 1–2, 1–2A, 1–3, A (as appropriate), B (optional).	—15 calendar days after change in information.

PART 713—ACTIVITIES INVOLVING SCHEDULE 2 CHEMICALS

Sec.
713.1 Prohibition on exports and imports of Schedule 2 chemicals to and from States not Party to the CWC.
713.2 Annual declaration requirements for plant sites that produce, process or consume Schedule 2 chemicals in excess of specified thresholds.
713.3 Annual declaration and reporting requirements for exports and imports of Schedule 2 chemicals.
713.4 Advance declaration requirements for additionally planned production, processing or consumption of Schedule 2 chemicals.
713.5 Amended declaration or report.
713.6 Declarations and reports returned without action by BIS.
713.7 Deadlines for submission of Schedule 2 declarations, reports, and amendments.
Supplement No. 1 to Part 713—Schedule 2 Chemicals
Supplement No. 2 to Part 713—Deadlines for Submission of Schedule 2 Declarations, Reports, and Amendments

Authority: 22 U.S.C. 6701 *et seq.*; 50 U.S.C. 1601 *et seq.*; 50 U.S.C. 1701 *et seq;* E.O. 12938 59 FR 59099, 3 CFR, 1994 Comp., p. 950, as amended by E.O. 13094, 63 FR 40803, 3 CFR, 1998 Comp., p. 200; E.O. 13128, 64 FR 36703, 3 CFR 1999 Comp., p. 199.

§ 713.1 Prohibition on exports and imports of Schedule 2 chemicals to and from States not Party to the CWC.

(a) You may not export any Schedule 2 chemical (see Supplement No. 1 to this part) to any destination or import any Schedule 2 chemical from any destination other than a State Party to the Convention. See Supplement No. 1 to part 710 of the CWCR for a list of States that are party to the Convention.

Note to § 713.1(a): See § 742.18 of the Export Administration Regulations (EAR) (15 CFR part 742) for prohibitions that apply to exports of Schedule 2 chemicals to States not Party to the CWC.

(b) Paragraph (a) of this section does not apply to:

(1) The export or import of a Schedule 2 chemical to or from a State not Party to the CWC by a department, agency, or other entity of the United States, or by any person, including a member of the Armed Forces of the United States, who is authorized by law, or by an appropriate officer of the United States to transfer or receive the Schedule 2 chemical;

(2) Mixtures containing Schedule 2A chemicals, if the concentration of each Schedule 2A chemical in the mixture is 1% or less by weight (note, however, that such mixtures may be subject to the regulatory requirements of other federal agencies);

(3) Mixtures containing Schedule 2B chemicals if the concentration of each Schedule 2B chemical in the mixture is 10% or less by weight (note, however, that such mixtures may be subject to the regulatory requirements of other federal agencies); or

(4) Products identified as consumer goods packaged for retail sale for personal use or packaged for individual use.

§ 713.2 Annual declaration requirements for plant sites that produce, process or consume Schedule 2 chemicals in excess of specified thresholds.

(a) *Declaration of production, processing or consumption of Schedule 2 chemicals for purposes not prohibited by the CWC*—(1) *Quantities of production, processing or consumption that trigger declaration requirements.* You must complete the forms specified in paragraph (b) of this section if you have been or will be involved in the following activities:

(i) *Annual declaration on past activities.* (A) You produced, processed or consumed at one or more plants on your plant site during any of the previous three calendar years, a Schedule 2 chemical in excess of any of the following declaration threshold quantities:

(*1*) 1 kilogram of chemical BZ: 3-Quinuclidinyl benzilate (see Schedule 2, paragraph A.3 in Supplement No. 1 to this part);

(*2*) 100 kilograms of chemical PFIB: 1,1,3,3,3-Pentafluoro-2(trifluoromethyl)-1-propene or 100 kilograms of chemical Amiton: 0,0-Diethyl S-[2-(diethylamino)

ethyl] phosphorothiolate and corresponding alkylated or protonated salts (see Schedule 2, paragraphs A.1 and A.2 in Supplement No. 1 to this part); or

(*3*) 1 metric ton of any chemical listed in Schedule 2, Part B (see Supplement No. 1 to this part).

(B) In order to trigger a declaration requirement for a past activity (i.e., production, processing or consumption) involving a Schedule 2 chemical, a plant on your plant site must have exceeded the applicable declaration threshold for that particular activity during one or more of the previous three calendar years. For example, if a plant on your plant site produced 800 kilograms of thiodiglycol and consumed 300 kilograms of the same Schedule 2 chemical, during the previous calendar year, you would not have a declaration requirement based on these activities, because neither activity at your plant would have exceeded the declaration threshold of 1 metric ton for that Schedule 2 chemical. However, a declaration requirement would apply if an activity involving a Schedule 2 chemical at the plant exceeded the declaration threshold in an earlier year (i.e., during the course of any other calendar year within the past three calendar years), as indicated in the example provided in the note to this paragraph.

Note to § 713.2(a)(1)(i)(B): To determine whether or not you have an annual declaration on past activities requirement for Schedule 2 chemicals, you must determine whether you produced, processed or consumed a Schedule 2 chemical above the applicable threshold at one or more plants on your plant site in any one of the three previous calendar years. For example, for the 2004 annual declaration on past activities period, if you determine that one plant on your plant site produced greater than 1 kilogram of the chemical BZ in calendar year 2002, and no plants on your plant site produced, processed or consumed any Schedule 2 chemical above the applicable threshold in calendar years 2003 or 2004, you still have a declaration requirement under this paragraph for the previous calendar year (2004). However, you must only declare on Form 2–3 (question 2–3.1), production data for calendar year 2004. You would declare ''0'' production because you did not produce BZ above the applicable threshold in calendar year 2004. Since the plant site did not engage in any other declarable activity (i.e., consumption, processing) in the 2002–2004 declaration period, you would leave blank questions 2–3.2 and 2–3.3 on Form 2–3. Note that declaring a ''0'' production quantity for 2004, as opposed to leaving the question blank, permits BIS to distinguish the activity that triggered the declaration requirement from activities that were not declarable during that period.

(ii) *Annual declaration on anticipated activities*. You anticipate that you will produce, process or consume at one or more plants on your plant site during the next calendar year, a Schedule 2 chemical in excess of the applicable declaration threshold set forth in paragraphs (a)(1)(i)(A)(*1*) through (*3*) of this section.

Note to § 713.2(a)(1)(ii): A null ''0'' declaration is not required if you do not plan to produce, process or consume a Schedule 2 chemical in the next calendar year.

(2) *Schedule 2 chemical production*. (i) For the purpose of determining Schedule 2 production, you must include all steps in the production of a chemical in any units within the same plant through chemical reaction, including any associated processes (e.g., purification, separation, extraction, distillation, or refining) in which the chemical is not converted into another chemical. The exact nature of any associated process (e.g., purification, etc.) is not required to be declared.

(ii) For the purpose of determining if a Schedule 2 chemical is subject to declaration, you must declare an intermediate Schedule 2 chemical, but not a transient intermediate Schedule 2 chemical.

(3) *Mixtures containing a Schedule 2 chemical*. (i) *Mixtures that must be counted*. You must count the quantity of each Schedule 2 chemical in a mixture, when determining the total quantity of a Schedule 2 chemical produced, processed, or consumed at a plant on your plant site, if the concentration of each Schedule 2 chemical in the mixture is 30% or more by volume or by weight, whichever yields the lesser percent. Do not count a Schedule 2 chemical in the mixture that represents less than 30% by volume or by weight.

(ii) *How to count the quantity of each Schedule 2 chemical in a mixture*. If your mixture contains 30% or more concentration of a Schedule 2 chemical, you must count the quantity (weight) of each Schedule 2 chemical in the mixture, not the total weight of the mixture. You must separately declare each Schedule 2 chemical with a concentration in the mixture that is 30% or more and exceeds the quantity threshold detailed in paragraphs (a)(1)(i)(A)(*1*) through (*3*) of this section.

(iii) *Determining declaration requirements for production, processing and consumption*. If the total quantity of a Schedule 2 chemical produced, processed or consumed at a plant on your plant site, including mixtures that contain 30% or more concentration of a Schedule 2 chemical, exceeds the applicable declaration threshold set forth in paragraphs (a)(1)(i)(A)(*1*) through (*3*) of this section, you have a declaration requirement. For example, if during calendar year 2001, a plant on your plant site produced a mixture containing 300 kilograms of thiodiglycol in a concentration of 32% and also produced 800 kilograms of thiodiglycol, the total amount of thiodiglycol produced at that plant for CWCR purposes would be 1100 kilograms, which exceeds the declaration threshold of 1 metric ton for that Schedule 2 chemical. You must declare past production of thiodiglycol at that plant site for calendar year 2001. If, on the other hand, a plant on your plant site processed a mixture containing 300 kilograms of thiodiglycol in a concentration of 25% and also processed 800 kilograms of thiodiglycol in other than mixture form, the total amount of thiodiglycol processed at that plant for CWCR purposes would be 800 kilograms and would not trigger a declaration requirement. This is because the concentration of thiodiglycol in the mixture is less than 30% and therefore did not have to be ''counted'' and added to the other 800 kilograms of processed thiodiglycol at that plant.

(b) *Types of declaration forms to be used*—(1) *Annual declaration on past activities*. You must complete the Certification Form and Forms 2–1, 2–2, 2–3, 2–3A, and Form A if one or more plants on your plant site produced, processed or consumed more than the applicable threshold quantity of a Schedule 2 chemical described in paragraphs (a)(1)(i)(A)(*1*) through (*3*) of this section in any of the three previous calendar years. Form B is optional. If you are subject to annual declaration requirements, you must include data for the previous calendar year only.

(2) *Annual declaration on anticipated activities*. You must complete the Certification Form and Forms 2–1, 2–2, 2–3, 2–3A, 2–3C, and Form A if you plan to produce, process, or consume at any plant on your plant site a Schedule 2 chemical above the applicable threshold set forth in paragraphs (a)(1)(i)(A)(*1*) through (*3*) of this section during the following calendar year. Form B is optional.

(c) *Quantities to be declared*—(1) *Production, processing and consumption of a Schedule 2 chemical above the declaration threshold*—(i) *Annual declaration on past activities*. If you are required to complete forms pursuant to paragraph (a)(1)(i) of this section, you must declare the aggregate quantity resulting from each type of activity (production, processing or consumption) from each plant on your plant site that exceeds the applicable

threshold for that Schedule 2 chemical. Do not include in these aggregate production, processing, and consumption quantities any data from plants on the plant site that did not individually produce, process or consume a Schedule 2 chemical in amounts greater than the applicable threshold. For example, if a plant on your plant site produced a Schedule 2 chemical in an amount greater than the applicable declaration threshold during the previous calendar year, you would have to declare only the production quantity from that plant, provided that the total amount of the Schedule 2 chemical processed or consumed at the plant did not exceed the applicable declaration threshold during any one of the previous three calendar years. If in the previous calendar year your production, processing and consumption activities all were below the applicable declaration threshold, but your declaration requirement is triggered because of production activities occurring in an earlier year, you would declare ''0'' only for the declared production activities.

(ii) *Annual declaration on anticipated activities.* If you are required to complete forms pursuant to paragraph (a)(1)(ii) of this section, you must declare the aggregate quantity of any Schedule 2 chemical that you plan to produce, process or consume at any plant(s) on your plant site above the applicable thresholds set forth in paragraphs (a)(1)(i)(A)(*1*) through (*3*) of this section during the next calendar year. Do not include in these anticipated aggregate production, processing, and consumption quantities any data from plants on the plant site that you do not anticipate will individually produce, process or consume a Schedule 2 chemical in amounts greater than the applicable thresholds.

(2) *Rounding.* For the chemical BZ, report quantities to the nearest hundredth of a kilogram (10 grams). For PFIB and the Amiton family, report quantities to the nearest 1 kilogram. For all other Schedule 2 chemicals, report quantities to the nearest 10 kilograms.

(d) *''Declared'' Schedule 2 plant site.* A plant site that submitted a declaration pursuant to paragraph (a)(1) of this section is a ''declared'' plant site.

(e) *Declared Schedule 2 plant sites subject to initial and routine inspections.* A ''declared'' Schedule 2 plant site is subject to initial and routine inspection by the Organization for the Prohibition of Chemical Weapons if it produced, processed or consumed in any of the three previous calendar years, or is anticipated to produce, process or consume in the next calendar year, in excess of ten times the applicable declaration threshold set forth in paragraphs (a)(1)(i)(A)(*1*) through (*3*) of this section (see part 716 of the CWCR). A ''declared'' Schedule 2 plant site that has received an initial inspection is subject to routine inspection.

§ 713.3 Annual declaration and reporting requirements for exports and imports of Schedule 2 chemicals.

(a) *Declarations and reports of exports and imports of Schedule 2 chemicals*—(1) *Declarations.* A Schedule 2 plant site that is declared because it produced, processed or consumed a Schedule 2 chemical at one or more plants above the applicable threshold set forth in paragraph (b) of this section, and also exported from or imported to the plant site that same Schedule 2 chemical above the applicable threshold, must submit export and import information as part of its declaration.

(2) *Reports.* The following persons must submit a report if they individually exported or imported a Schedule 2 chemical above the applicable threshold indicated in paragraph (b) of this section:

(i) A declared plant site that exported or imported a Schedule 2 chemical that was different than the Schedule 2 chemical produced, processed or consumed at one or more plants at the plant site above the applicable declaration threshold;

(ii) An undeclared plant site;

(iii) A trading company; or

(iv) Any other person subject to the CWCR.

Note to § 713.3(a)(1) and (a)(2)(i): A declared Schedule 2 plant site may need to declare exports or imports of Schedule 2 chemicals that it produced, processed or consumed above the applicable threshold and also report exports or imports of different Schedule 2 chemicals that it did not produce, process or consume above the applicable threshold quantities. The report may be submitted to BIS either with or separately from the annual declaration on past activities (see § 713.3(d) of the CWCR).

Note to § 713.3(a)(2): The U.S. Government will not submit to the OPCW company-specific information relating to the export or import of Schedule 2 chemicals contained in reports . The U.S. Government will add all export and import information contained in reports to export and import information contained in declarations to establish the U.S. national aggregate declaration on exports and imports.

Note to § 713.3(a)(1) and (2): Declared and undeclared plant sites must count, for declaration or reporting purposes, all exports from and imports to the *entire* plant site, not only from or to individual plants on the plant site.

(b) *Quantities of exports or imports that trigger a declaration or reporting requirement.* (1) You have a declaration or reporting requirement and must complete the forms specified in paragraph (d) of this section if you exported or imported a Schedule 2 chemical in excess of the following threshold quantities:

(i) 1 kilogram of chemical BZ: 3-Quinuclidinyl benzilate (See Schedule 2, paragraph A.3 included in Supplement No. 1 to this part);

(ii) 100 kilograms of chemical PFIB: 1,1,3,3,3-Pentafluoro-2(trifluoromethyl)-1-propene or 100 kilograms of Amiton: O,O Diethyl S-[2(diethylamino)ethyl] phosphorothiolate *and* corresponding alkylated or protonated salts (see Schedule 2, paragraphs A.1 and A.2 included in Supplement No.1 to this part); or

(iii) 1 metric ton of any chemical listed in Schedule 2, Part B (see Supplement No.1 to this part).

(2) *Mixtures containing a Schedule 2 chemical.* The quantity of each Schedule 2 chemical contained in a mixture must be counted for the declaration or reporting of an export or import only if the concentration of each Schedule 2 chemical in the mixture is 30% or more by volume or by weight, whichever yields the lesser percent. You must declare separately each Schedule 2 chemical whose concentration in the mixture is 30% or more.

Note 1 to § 713.3(b)(2): See § 713.2(a)(2)(ii) of the CWCR for information on counting amounts of Schedule 2 chemicals contained in mixtures and determining declaration and reporting requirements.

Note 2 to § 713.3(b)(2): The ''30% and above'' mixtures rule applies only for declaration and reporting purposes. This rule does not apply for purposes of determining whether the export of your mixture to a non-State Party requires an End-Use Certificate or for determining whether you need an export license from BIS (see § 742.2, § 742.18 and § 745.2 of the Export Administration Regulations) or from the Department of State (see the International Traffic in Arms Regulations (22 CFR parts 120 through130)).

(c) *Declaration and reporting requirements*—(1) *Annual declaration on past activities.* A plant site described in paragraph (a)(1) of this section that has an annual declaration requirement for the production, processing, or consumption of a Schedule 2 chemical for the previous calendar year also must declare the export and/or import of that same Schedule 2 chemical if the amount exceeded the applicable threshold set forth in paragraph (b) of this section. The plant site must declare such export or import information as part of its annual declaration of past activities.

(2) *Annual report on exports and imports.* Declared plant sites described in paragraph (a)(2)(i) of this section, and undeclared plant sites, trading companies or any other person (described in paragraphs (a)(2)(ii) through (iv) of this section) subject to the CWCR that exported or imported a Schedule 2 chemical in a previous calendar year in excess of the applicable thresholds set forth in paragraph (b) of this section must submit an annual report on such exports or imports.

(d) *Types of declaration and reporting forms to be used*—(1) *Annual declaration on past activities.* If you are a declared Schedule 2 plant site, as described in paragraph (a)(1) of this section, you must complete Form 2–3B, in addition to the forms required by § 713.2(b)(1) of the CWCR, for each declared Schedule 2 chemical exported or imported above the applicable threshold in the previous calendar year.

(2) *Annual report on exports and imports.* (i) If you are a declared plant site, as described in paragraph (a)(2)(i) of this section, you may fulfill your annual reporting requirements by:

(A) Submitting, *with* your annual declaration on past activities, a Form 2–3B for each Schedule 2 chemical you exported or imported above the applicable threshold. Attach Form A, as appropriate; Form B is optional; or

(B) Submitting, *separately from* your annual declaration on past activities, a Certification Form, Form 2–1, and Form 2–3B for each Schedule 2 chemical you exported or imported above the applicable threshold. Attach Form A, as appropriate; Form B is optional.

(ii) If you are an undeclared plant site, trading company or any other person subject to the CWCR, you must complete the Certification Form, Form 2–1, and Form 2–3B for each Schedule 2 chemical you exported or imported above the applicable threshold. Attach Form A, as appropriate; Form B is optional.

(e) *Quantities to be declared*—(1) *Calculations.* If you exported from or imported to your plant site, trading company, or other location more than the applicable threshold of a Schedule 2 chemical in the previous calendar year, you must declare or report all exports and imports of that chemical by country of destination or country of origin, respectively, and indicate the total amount exported to or imported from each country.

(2) *Rounding.* For purposes of declaring or reporting exports and imports of a Schedule 2 chemical, you must total all exports and imports per calendar year per recipient or source and then round as follows: For the chemical BZ, the total quantity for each country of destination or country of origin (source) should be reported to the nearest hundredth of a kilogram (10 grams); for PFIB and Amiton and corresponding alkylated or protonated salts, the quantity for each destination or source should be reported to the nearest 1 kilogram; and for all other Schedule 2 chemicals, the total quantity for each destination or source should be reported to the nearest 10 kilograms.

§ 713.4 Advance declaration requirements for additionally planned production, processing, or consumption of Schedule 2 chemicals.

(a) *Declaration requirements for additionally planned activities.* (1) You must declare additionally planned production, processing, or consumption of Schedule 2 chemicals after the annual declaration on anticipated activities for the next calendar year has been delivered to BIS if:

(i) You plan that a previously undeclared plant on your plant site under § 713.2(a)(1)(ii) of the CWCR will produce, process, or consume a Schedule 2 chemical above the applicable declaration threshold;

(ii) You plan to produce, process, or consume at a plant declared under § 713.2(a)(1)(ii) of the CWCR an additional Schedule 2 chemical above the applicable declaration threshold;

(iii) You plan an additional activity (production, processing, or consumption) at your declared plant above the applicable declaration threshold for a chemical declared under § 713.2(a)(1)(ii) of the CWCR;

(iv) You plan to increase the production, processing, or consumption of a Schedule 2 chemical by a plant declared under § 713.2(a)(1)(ii) of the CWCR from the amount exceeding the applicable declaration threshold to an amount exceeding the applicable inspection threshold (see § 716.1(b)(2) of the CWCR);

(v) You plan to change the starting or ending date of anticipated production, processing, or consumption declared under § 713.2(a)(1)(ii) of the CWCR by more than three months; or

(vi) You plan to increase your production, processing, or consumption of a Schedule 2 chemical by a declared plant site by 20 percent or more above that declared under § 713.2(a)(1)(ii) of the CWCR.

(2) If you must submit a declaration on additionally planned activities because you plan to engage in any of the activities listed in paragraphs (a)(1)(i) through (vi) of this section, you also should declare changes to your declaration relating to the following activities. You do not have to submit an additionally planned declaration if you are only changing the following non-quantitative activities:

(i) Changes to the plant's production capacity;

(ii) Changes or additions to the product group codes for the plant site or the plant(s);

(iii) Changes to the plant's activity status (i.e., dedicated, multipurpose, or other status);

(iv) Changes to the plant's multipurpose activities;

(v) Changes to the plant site's status relating to domestic transfer of the chemical;

(vi) Changes to the plant site's purposes for which the chemical will be produced, processed or consumed; or

(vii) Changes to the plant site's status relating to exports of the chemical or the addition of new countries for export.

(b) *Declaration forms to be used.* If you are required to declare additionally planned activities pursuant to paragraph (a) of this section, you must complete the Certification Form and Forms 2–1, 2–2, 2–3, and 2–3C as appropriate. Such forms are due to BIS at least 15 days prior to beginning the additional activity.

§ 713.5 Amended declaration or report.

In order for BIS to maintain accurate information on previously submitted plant site declarations, including information necessary to facilitate inspection notifications and activities or to communicate declaration or reporting requirements, amended declarations or reports will be required under the circumstances described in this section. This section applies only to annual declarations on past activities submitted for the three previous calendar years, annual reports on exports and imports for the previous calendar year or annual declarations on anticipated activities covering the current calendar year, unless specified otherwise in a final inspection report.

(a) *Changes to information that directly affect inspection of a declared plant site's Annual Declaration of Past Activities (ADPA) or Combined Annual Declaration and Report.* You must submit an amended declaration or report to BIS within 15 days of any change in the following information:

(1) Types of Schedule 2 chemicals produced, processed, or consumed;

(2) Quantities of Schedule 2 chemicals produced, processed, or consumed;

(3) Activities involving Schedule 2 chemicals (production, processing, consumption);

(4) End-use of Schedule 2 chemicals (e.g., additional end-use(s));

(5) Product group codes for Schedule 2 chemicals produced, processed, or consumed;

(6) Production capacity for manufacturing a specific Schedule 2 chemical at particular plant site;

(7) Exports or imports (e.g., changes in the types of Schedule 2 chemicals exported or imported or in the quantity, recipients, or sources of such chemicals);

(8) Domestic transfers (e.g., changes in the types of Schedule 2 chemicals, types of destinations, or product group codes); and

(9) Addition of new plant(s) for the production, processing, or consumption of Schedule 2 chemicals.

(b) *Changes to export or import information submitted in Annual Reports on Exports and Imports from undeclared plant sites, trading companies and U.S. persons.* You must submit an amended report or amended combined declaration and report to BIS within 15 days of any change in the following export or import information:

(1) Types of Schedule 2 chemicals exported or imported (additional Schedule 2 chemicals);

(2) Quantities of Schedule 2 chemicals exported or imported;

(3) Destination(s) of Schedule 2 chemicals exported; and

(4) Source(s) of Schedule 2 chemicals imported.

(c) *Changes to company and plant site information that must be maintained by BIS for the ADPA, Annual Declaration on Anticipated Activities (ADAA), and the Annual Report on Exports and Imports*—(1) *Internal company changes.* You must submit an amended declaration or report to BIS within 30 days of any change in the following information:

(i) Name of declaration/report point of contact (D–POC), including telephone number, facsimile number, and e-mail address;

(ii) Name(s) of inspection point(s) of contact (I–POC), including telephone number(s), facsimile number(s) and e-mail address(es);

(iii) Company name (see paragraph (c)(2) of this section for other company changes);

(iv) Company mailing address;

(v) Plant site name;

(vi) Plant site owner, including telephone number, and facsimile number;

(vii) Plant site operator, including telephone number, and facsimile number;

(viii) Plant name;

(ix) Plant owner, including telephone number, and facsimile number; and

(x) Plant operator, including telephone number and facsimile number.

(2) *Change in ownership of company, plant site, or plant.* If you sold *or* purchased a declared plant site, plant, or trading company you must submit an amended declaration or report to BIS, either before the effective date of the change or within 30 days after the effective date of the change. The amended declaration or report must include the following information:

(i) Information that must be submitted to BIS by the company selling a declared plant site:

(A) Name of seller (i.e., name of the company selling a declared plant site);

(B) Name of the declared plant site and U.S. Code Number for that plant site;

(C) Name of purchaser (i.e., name of the new company/owner purchasing a declared plant site) and identity of contact person for the purchaser, if known;

(D) Date of ownership transfer or change;

(E) Additional (e.g., unique) details on the sale of the declared plant site relevant to ownership or operational control over any portion of the declared plant site (e.g., whether the entire plant site or only a portion of the declared plant site has been sold to a new owner); and

(F) Details regarding whether the new owner will submit the next declaration or report for the entire calendar year during which the ownership change occurred, or whether the previous owner and new owner will submit separate declarations or reports for the periods of the calendar year during which each owned the plant site or trading company.

(*1*) If the new owner is responsible for submitting the declaration or report for the entire current year, it must have in its possession the records for the period of the year during which the previous owner owned the plant site.

(*2*) If the previous owner and new owner will submit separate declarations or reports for the periods of the calendar year during which each owned the plant site, and, if at the time of transfer of ownership, the previous owner's activities are not above the declaration or reporting thresholds set forth in § 713.2(a)(1)(i)(A)(*1*) through (*3*) and § 713.3(b)(1)(i) through (iii) of the CWCR, respectively, the previous owner and the new owner must still submit declarations to BIS with the below threshold quantities indicated.

(*3*) If the part-year declarations submitted by the previous owner and the new owner are not, when combined, above the declaration thresholds set forth in § 713.2(a)(1)(i)(A)(*1*) through (*3*) of the CWCR, BIS will return the declarations without action as set forth in § 713.6 of the CWCR.

(*4*) If part-year reports submitted by the previous owner and the new owner are not, when combined, above the thresholds in §§ 713.3(b)(1)(i) through (iii) of the CWCR, BIS will return the reports without action as set forth in § 713.6 of the CWCR.

(ii) Information that must be submitted to BIS by the company purchasing a declared plant site:

(A) Name of purchaser (i.e., name of individual or company purchasing a declared plant site);

(B) Mailing address of purchaser;

(C) Name of declaration point of contact (D–POC) for the purchaser, including telephone number, facsimile number, and e-mail address;

(D) Name of inspection point(s) of contact (I–POC) for the purchaser, including telephone number(s), facsimile number(s) and e-mail address(es);

(E) Name of the declared plant site and U.S. Code Number for that plant site;

(F) Location of the declared plant site;

(G) Owner of the declared plant site, including telephone number, and facsimile number;

(H) Operator of the declared plant site, including telephone number, and facsimile number;

(I) Name of plant(s) where Schedule 2 activities exceed the applicable declaration threshold;

(J) Owner and operator of plant(s) where Schedule 2 activities exceed the applicable declaration threshold, including telephone numbers, and facsimile numbers;

(K) Location of the plant where Schedule 2 activities exceed the applicable declaration threshold; and

(L) Details on the next declaration or report submission on whether the new owner will submit the declaration or report for the entire calendar year during which the ownership change occurred, or whether the previous owner and new owner will submit separate declarations or reports for the periods of the calendar year during which each owned the plant site or trading company.

Note 1 to § 713.5(c): You must submit an amendment to your most recently submitted declaration or report for declaring changes to internal company information (e.g., company name change) or changes in ownership of a facility or trading company that have occurred since the submission of this declaration or report. BIS will process the amendment to ensure current information is

on file regarding the facility or trading company (e.g., for inspection notifications and correspondence) and will also forward the amended declaration to the OPCW to ensure that they also have current information on file regarding your facility or trading company.

Note 2 to § 713.5(c): You may notify BIS of change in ownership via a letter to the address given in § 711.6 of the CWCR. If you are submitting an amended declaration or report, use Form B to address details regarding the sale of the declared plant site or trading company.

Note 3 to § 713.5(c): For ownership changes, the declared facility or trading company will maintain its original U.S. Code Number, unless the plant site or trading company is sold to multiple owners, at which time BIS will assign new U.S. Code Numbers.

(d) *Inspection-related amendments.* If, following the completion of an inspection (see parts 716 and 717 of the CWCR), you are required to submit an amended declaration based on the final inspection report, BIS will notify you in writing of the information that will be required pursuant to §§ 716.10 and 717.5 of the CWCR. You must submit an amended declaration to BIS no later than 45 days following your receipt of BIS's post-inspection letter.

(e) *Non-substantive changes.* If, subsequent to the submission of your declaration or report to BIS, you discover one or more non-substantive typographical errors in your declaration or report, you are not required to submit an amended declaration or report to BIS. Instead, you may correct these errors in a subsequent declaration or report.

(f) *Documentation required for amended declarations or reports.* If you are required to submit an amended declaration or report to BIS pursuant to paragraph (a), (b), (c), or (d) of this section, you must submit either:

(1) A letter containing all of the corrected information required, in accordance with the provisions of this section, to amend your declaration or report; or

(2) Both of the following:

(i) A new Certification Form; and

(ii) The specific forms required for the declaration or report type being amended (e.g., annual declaration on past activities) containing the corrected information required, in accordance with the requirements of this section, to amend your declaration or report.

§ 713.6 Declarations and reports returned without action by BIS.

If you submit a declaration or report and BIS determines that the information contained therein is not required by the CWCR, BIS will return the original declaration or report to you, without action, accompanied by a letter explaining BIS's decision. In order to protect your confidential business information, BIS will not maintain a copy of any declaration or report that is returned without action (RWA). However, BIS will maintain a copy of the RWA letter.

§ 713.7 Deadlines for submission of Schedule 2 declarations, reports, and amendments.

Declarations, reports, and amendments required under this part must be postmarked by the appropriate date identified in Supplement No. 2 to this part 713. Required declarations, reports, and amendments include:

(a) Annual declaration on past activities (production, processing, or consumption of Schedule 2 chemicals during the previous calendar year);

(b) Annual report on exports and imports of Schedule 2 chemicals by plant sites, trading companies, and other persons subject to the CWCR (during the previous calendar year);

(c) Combined declaration and report (production, processing, or consumption of Schedule 2 chemicals, as well as exports or imports of the same or different Schedule 2 chemicals, by a declared plant site during the previous calendar year);

(d) Annual declaration on anticipated activities (production, processing or consumption) involving Schedule 2 chemicals during the next calendar year;

(e) Declaration on Additionally Planned Activities (production, processing or consumption) involving Schedule 2 chemicals; and

(f) Amended declaration and report, including combined declaration and report.

SUPPLEMENT NO. 1 TO PART 713.—SCHEDULE 2 CHEMICALS

	(CAS registry number)
A. Toxic chemicals:	
(1) Amiton: O,O-Diethyl S-[2-(diethylamino)ethyl] phosphorothiolate and corresponding alkylated or protonated salts	(78–53–5)
(2) PFIB: 1,1,3,3,3-Pentafluoro-2-(trifluoromethyl)-1-propene	(382–21–8)
(3) BZ: 3-Quinuclidinyl benzilate	(6581–06–2)
B. Precursors:	
(4) Chemicals, except for those listed in Schedule 1, containing a phosphorus atom to which is bonded one methyl, ethyl or propyl (normal or iso) group but not further carbon atoms, e.g. Methylphosphonyl dichloride	(676–97–1)
Dimethyl methylphosphonate	(756–79–6)
Exemption: Fonofos: O-Ethyl S-phenyl ethylphosphono-thiolothionate	(944–22–9)
(5) N,N-Dialkyl (Me, Et, n-Pr or i-Pr) phosphoramidic dihalides	
(6) Dialkyl (Me, Et, n-Pr or i-Pr) N,N-dialkyl (Me, Et, n-Pr or i-Pr)-phosphoramidates	
(7) Arsenic trichloride	(7784–34–1)
(8) 2,2-Diphenyl-2-hydroxyacetic acid	(76–93–7)
(9) Quinuclidine-3-ol	(1619–34–7)
(10) N,N-Dialkyl (Me, Et, n-Pr or i-Pr) aminoethyl-2-chlorides and corresponding protonated salts	
(11) N,N-Dialkyl (Me, Et, n-Pr or i-Pr) aminoethane-2-ols and corresponding protonated salts	
Exemptions: N,N-Dimethylaminoethanol and corresponding protonated salts	(108–01–0)
N,N-Diethylaminoethanol and corresponding protonated salts	(100–37–8)
(12) N,N-Dialkyl (Me, Et, n-Pr or i-Pr) aminoethane-2-thiols and corresponding protonated salts	
(13) Thiodiglycol: Bis(2-hydroxyethyl)sulfide	(111–48–8)
(14) Pinacolyl alcohol: 3,3-Dimethylbutane-2-ol	(464–07–3)

Notes to Supplement No. 1

Note 1: Note that the following Schedule 2 chemicals are controlled for export purposes by the Directorate of Defense Trade Controls of the Department of State under the International Traffic in Arms Regulations (22 CFR parts 120 through 130): Amiton: O,O-Diethyl S-[2-(diethylamino)ethyl] phosphorothiolate and corresponding alkylated or protonated salts (78–53–5); BZ: 3-Quinuclidinyl benzilate 6581–06–2); and Methylphosphonyl dichloride (676–97–1).

Note 2: All Schedule 2 chemicals not listed in Note 1 to this Supplement are controlled for export purposes under the Export Administration Regulations (see part 774 of the EAR, the Commerce Control List).

SUPPLEMENT NO. 2 TO PART 713.—DEADLINES FOR SUBMISSION OF SCHEDULE 2 DECLARATIONS, REPORTS, AND AMENDMENTS

Declarations and reports	Applicable forms	Due dates
Annual Declaration on Past Activities (previous calendar year)—Declared plant site (production, processing, or consumption).	Certification, 2–1, 2–2, 2–3, 2–3A, 2–3B (if also exported or imported), A (as appropriate), B (optional).	February 28 of the year following any calendar year in which the production, processing, or consumption of a Schedule 2 chemical exceeded the applicable declaration thresholds in §713.2(a)(1)(i) of the CWCR.
Annual Report on Exports and Imports (previous calendar year)—Plant site, trading company, other persons.	Certification, 2–1, 2–3B, A (as appropriate), B (optional).	February 28 of the year following any calendar year in which exports or imports of a Schedule 2 chemical by a plant site, trading company, or other person subject to the CWCR (as described in §713.3(a)(2) of the CWCR) exceeded the applicable thresholds in §713.3(b)(1) of the CWCR.
Combined Declaration & Report—Declared plant site (production, processing, or consumption; exports and imports).	Certification, 2–1, 2–2, 2–3, 2–3A, 2–3B, A (as appropriate), B (optional).	February 28 of the year following any calendar year in which the production, processing, or consumption of a Schedule 2 chemical and the export or import of the same or a different Schedule 2 chemical by a declared plant site exceeded the applicable thresholds in §§713.2(a)(1)(i) and 713.3(b)(1), respectively, of the CWCR.
Annual Declaration on Anticipated Activities (next calendar year).	Certification, 2–1, 2–2, 2–3, 2–3A, 2–3C, A (as appropriate), B (optional).	September 3 of the year prior to any calendar year in which Schedule 2 activities are anticipated to occur.
Declaration on Additionally Planned Activities (production, processing and consumption).	Certification, 2–1, 2–2, 2–3, 2–3A, 2–3C, A (as appropriate), B (optional).	15 calendar days before the additionally planned activity begins.
Amended Declaration	Certification, 2–1, 2–2, 2–3 2–3A, 2–3B (if also exported or imported), A (as appropriate), B (optional).	
—Declaration information		—15 calendar days after change in information.
—Company information		—30 calendar days after change in information.
—Post-inspection letter		—45 calendar days after receipt of letter.
Amended Report	Certification, 2–1, 2–3B, A (as appropriate), B (optional).	—15 calendar days after change in information.
Amended Combined Declaration & Report	Certification, 2–1, 2–2, 2–3, 2–3A, 2–3B, A (as appropriate), B (optional).	—15 calendar days after change in information.

PART 714—ACTIVITIES INVOLVING SCHEDULE 3 CHEMICALS

Sec.

714.1 Annual declaration requirements for plant sites that produce a Schedule 3 chemical in excess of 30 metric tons.
714.2 Annual reporting requirements for exports and imports in excess of 30 metric tons of Schedule 3 chemicals.
714.3 Advance declaration requirements for additionally planned production of Schedule 3 chemicals.
714.4 Amended declaration or report.
714.5 Declarations and reports returned without action by BIS.
714.6 Deadlines for submission of Schedule 3 declarations, reports, and amendments.
Supplement No. 1 to Part 714—Schedule 3 Chemicals
Supplement No. 2 to Part 714—Deadlines for Submission of Schedule 3 Declarations, Reports, and Amendments

Authority: 22 U.S.C. 6701 *et seq.*; E.O. 13128, 64 FR 36703, 3 CFR 1999 Comp., p. 199.

§714.1 Annual declaration requirements for plant sites that produce a Schedule 3 chemical in excess of 30 metric tons.

(a) *Declaration of production of Schedule 3 chemicals for purposes not prohibited by the CWC.*—(1) *Production quantities that trigger the declaration requirement.* You must complete the appropriate forms specified in paragraph (b) of this section if you have produced or anticipate producing a Schedule 3 chemical (see Supplement No. 1 to this part) as follows:

(i) *Annual declaration on past activities.* You produced at one or more plants on your plant site in excess of 30 metric tons of any single Schedule 3 chemical during the previous calendar year.

(ii) *Annual declaration on anticipated activities.* You anticipate that you will produce at one or more plants on your plant site in excess of 30 metric tons of any single Schedule 3 chemical in the next calendar year.

(2) *Schedule 3 chemical production.* (i) For the purpose of determining Schedule 3 production, you must include all steps in the production of a chemical in any units within the same plant through chemical reaction, including any associated processes (e.g., purification, separation, extraction, distillation, or refining) in which the chemical is not converted into another chemical. The exact nature of any associated process (e.g., purification, etc.) is not required to be declared.

(ii) For the purpose of determining if a Schedule 3 chemical is subject to declaration, you must declare an intermediate Schedule 3 chemical, but not a transient intermediate Schedule 3 chemical.

(3) *Mixtures containing a Schedule 3 chemical.* (i) *When you must count the quantity of a Schedule 3 chemical in a*

mixture for declaration purposes. The quantity of each Schedule 3 chemical contained in a mixture must be counted for declaration purposes only if the concentration of each Schedule 3 chemical in the mixture is 80% or more by volume or by weight, whichever yields the lesser percent.

(ii) *How to count the amount of a Schedule 3 chemical in a mixture.* If your mixture contains 80% or more concentration of a Schedule 3 chemical, you must count only the amount (weight) of the Schedule 3 chemical in the mixture, not the total weight of the mixture.

(b) *Types of declaration forms to be used.*—(1) *Annual declaration on past activities.* You must complete the Certification Form and Forms 3–1, 3–2, 3–3, and Form A if one or more plants on your plant site produced in excess of 30 metric tons of any single Schedule 3 chemical during the previous calendar year. Form B is optional.

(2) *Annual declaration on anticipated activities.* You must complete the Certification Form, and Forms 3–1 and 3–3 if you anticipate that you will produce at one or more plants on your plant site in excess of 30 metric tons of any single Schedule 3 chemical in the next calendar year.

(c) *Quantities to be declared.* (1) *Production of a Schedule 3 chemical in excess of 30 metric tons.* If your plant site is subject to the declaration requirements of paragraph (a) of this section, you must declare the range within which the production at your plant site falls (30 to 200 metric tons, 200 to 1,000 metric tons, etc.) as specified on Form 3–3. When specifying the range of production for your plant site, you must aggregate the production quantities of all plants on the plant site that produced the Schedule 3 chemical in amounts greater than 30 metric tons. Do not aggregate amounts of production from plants on the plant site that did not individually produce a Schedule 3 chemical in amounts greater than 30 metric tons. You must complete a separate Form 3–3 for each Schedule 3 chemical for which production at your plant site exceeds 30 metric tons.

(2) *Rounding.* To determine the production range into which your plant site falls, add all the production of the declared Schedule 3 chemical during the calendar year from all plants on your plant site that produced the Schedule 3 chemical in amounts exceeding 30 metric tons, and round to the nearest ten metric tons.

(d) *''Declared'' Schedule 3 plant site.* A plant site that submitted a declaration pursuant to paragraph (a)(1) of this section is a ''declared'' Schedule 3 plant site.

(e) *Routine inspections of declared Schedule 3 plant sites.* A ''declared'' Schedule 3 plant site is subject to routine inspection by the Organization for the Prohibition of Chemical Weapons (see part 716 of the CWCR) if:

(1) The declared plants on your plant site produced in excess of 200 metric tons aggregate of any Schedule 3 chemical during the previous calendar year; or

(2) You anticipate that the declared plants on your plant site will produce in excess of 200 metric tons aggregate of any Schedule 3 chemical during the next calendar year.

§ 714.2 Annual reporting requirements for exports and imports in excess of 30 metric tons of Schedule 3 chemicals.

(a) Any person subject to the CWCR that exported from or imported into the United States in excess of 30 metric tons of any single Schedule 3 chemical during the previous calendar year has a reporting requirement under this section.

(1) *Annual report on exports and imports.* Declared plant sites, undeclared plant sites, trading companies, or any other person subject to the CWCR that exported from or imported into the United States in excess of 30 metric tons of any single Schedule 3 chemical during the previous calendar year must submit an annual report on exports and imports.

Note 1 to § 714.2(a)(1): Declared and undeclared plant sites must count, for reporting purposes, all exports from and imports to the entire plant site, not only from or to individual plants on the plant site.

Note 2 to § 714.2(a)(1): The U.S. Government will not submit to the OPCW company-specific information relating to the export or import of Schedule 3 chemicals contained in reports. The U.S. Government will add all export and import information contained in reports to establish the U.S. national aggregate declaration on exports and imports.

(2) *Mixtures containing a Schedule 3 chemical.* The quantity of a Schedule 3 chemical contained in a mixture must be counted for reporting an export or import only if the concentration of the Schedule 3 chemical in the mixture is 80% or more by volume or by weight, whichever yields the lesser percent. For reporting purposes, only count the weight of the Schedule 3 chemical in the mixture, not the entire weight of the mixture.

Note to § 714.2(a)(2): The ''80% and above'' mixtures rule applies only for reporting purposes. This rule does not apply for purposes of determining whether the export of your mixture to a non-State Party requires an End-Use Certificate or for determining whether you need an export license from BIS (see 15 CFR 742.2, 742.18 and 745.2 of the Export Administration Regulations) or from the Department of State (see the International Traffic in Arms Regulations (22 CFR parts 120 through 130)).

(b) *Types of forms to be used.*—(1) *Declared Schedule 3 plant sites.* (i) If your plant site is declared for production of a Schedule 3 chemical (and has completed questions 3–3.1 and 3–3.2 on Form 3–3) and you also exported from or imported to your plant site in excess of 30 metric tons of that same Schedule 3 chemical, you must report the export or import by either:

(A) Completing question 3–3.3 on Form 3–3 on your declaration for that same Schedule 3 chemical; or

(B) Submitting, separately from your declaration, a Certification Form, Form 3–1, and a Form 3–3 for each Schedule 3 chemical to be reported, completing only question 3–3.3. Attach Form A, as appropriate; Form B is optional.

(ii) If your plant site is declared for production of a Schedule 3 chemical and you exported or imported in excess of 30 metric tons of a different Schedule 3 chemical, you must report the export or import by either:

(A) Submitting, along with your declaration, a Form 3–3 for each Schedule 3 chemical to be reported, completing only question 3–3.3. Attach Form A, as appropriate; Form B is optional; or

(B) Submitting, separately from your declaration, a Certification Form, Form 3–1 and a Form 3.3 for each Schedule 3 chemical to be reported, completing only question 3–3.3. Attach Form A, as appropriate; Form B is optional.

(2) If you are an undeclared plant site, a trading company, or any other person subject to the CWCR, you must submit a Certification Form, Form 3–1, and a Form 3–3 for each Schedule 3 chemical to be reported, completing only question 3–3.3. Attach Form A, as appropriate; Form B is optional.

(c) *Quantities to be reported*—(1) *Calculations.* If you exported from or imported to your plant site or trading company more than 30 metric tons of a Schedule 3 chemical in the previous calendar year, you must report all exports and imports of that chemical by country of destination or country of origin, respectively, and indicate the total amount exported to or imported from each country.

(2) *Rounding.* For purposes of reporting exports and imports of a Schedule 3 chemical, you must total all exports and imports per calendar year

per recipient or source and then round to the nearest 0.1 metric tons.

Note to § 714.2(c): Under the Convention, the United States is obligated to provide the OPCW a national aggregate annual declaration of the quantities of each Schedule 3 chemical exported and imported, with a quantitative breakdown for each country or destination involved. The U.S. Government will *not* submit your company-specific information relating to the export or import of a Schedule 3 chemical reported under this § 714.2. The U.S. Government will add all export and import information submitted by various facilities under this section to produce a national aggregate annual declaration of destination-by-destination trade for each Schedule 3 chemical.

§ 714.3 Advance declaration requirements for additionally planned production of Schedule 3 chemicals.

(a) *Declaration requirements.* (1) You must declare additionally planned production of Schedule 3 chemicals after the annual declaration on anticipated activities for the next calendar year has been delivered to BIS if:

(i) You plan that a previously undeclared plant on your plant site under § 714.1(a)(1)(ii) of the CWCR will produce a Schedule 3 chemical above the declaration threshold;

(ii) You plan to produce at a plant declared under § 714.1(a)(1)(ii) of the CWCR an additional Schedule 3 chemical above the declaration threshold;

(iii) You plan to increase the production of a Schedule 3 chemical by declared plants on your plant site from the amount exceeding the applicable declaration threshold to an amount exceeding the applicable inspection threshold (see § 716.1(b)(3) of the CWCR); or

(iv) You plan to increase the aggregate production of a Schedule 3 chemical at a declared plant site to an amount above the upper limit of the range previously declared under § 714.1(a)(1)(ii) of the CWCR.

(2) If you must submit a declaration on additionally planned activities because you plan to engage in any of the activities listed in paragraphs (a)(1)(i) through (iv) of this section, you also should declare any changes to the anticipated purposes of production or product group codes. You do not have to submit a declaration on additionally planned activities if you are only changing your purposes of production or product group codes.

(b) *Declaration forms to be used.* If you are required to declare additionally planned activities pursuant to paragraph (a) of this section, you must complete the Certification Form and Forms 3–1, 3–2, and 3–3 as appropriate. Such forms are due to BIS at least 15 days in advance of the beginning of the additional or new activity.

§ 714.4 Amended declaration or report.

In order for BIS to maintain accurate information on previously submitted plant site declarations, including information necessary to facilitate inspection notifications and activities or to communicate declaration or reporting requirements, amended declarations or reports will be required under the following circumstances described in this section. This section applies only to annual declarations on past activities and annual reports on exports and imports submitted for the previous calendar year or annual declarations on anticipated activities covering the current calendar year, unless specified otherwise in a final inspection report.

(a) *Changes to information that directly affects a declared plant site's Annual Declaration of Past Activities (ADPA) or Combined Annual Declaration or Report which was previously submitted to BIS.* You must submit an amended declaration or report to BIS within 15 days of determining that there has been a change in any of the following information that you have previously declared or reported:

(1) Types of Schedule 3 chemicals produced (e.g., production of additional Schedule 3 chemicals);

(2) Production range (e.g., from 30 to 200 metric tons to above 200 to 1000 metric tons) of Schedule 3 chemicals;

(3) Purpose of Schedule 3 chemical production (e.g., additional end-uses); or

(4) Addition of new plant(s) for production of Schedule 3 chemicals.

(b) *Changes to export or import information submitted in Annual Reports on Exports and Imports from undeclared plant sites, trading companies and U.S. persons.* You must submit an amended report or amended combined declaration and report to BIS within 15 days of any change in the following export or import information:

(1) Types of Schedule 3 chemicals exported or imported (additional Schedule 3 chemicals);

(2) Quantities of Schedule 3 chemicals exported or imported;

(3) Destination(s) of Schedule 3 chemicals exported; and

(4) Source(s) of Schedule 3 chemicals imported.

(c) *Changes to company and plant site information submitted in the ADPA, the Annual Declaration of Anticipated Activities, and the Annual Report on Exports and Imports*—(1) *Internal company changes.* You must submit an amended declaration or report to BIS within 30 days of any change in the following information:

(i) Name of declaration/report point of contact (D–POC), including telephone number, facsimile number, and e-mail address;

(ii) Name(s) of inspection point(s) of contact (I–POC), including telephone number, and facsimile number, and e-mail address(es);

(iii) Company name (see 714.4(c)(2) for other company changes);

(iv) Company mailing address;

(v) Plant site name;

(vi) Plant site owner, including telephone number and facsimile number;

(vii) Plant site operator, including telephone number and facsimile number;

(viii) Plant name;

(xi) Plant owner, including telephone number and facsimile number; and

(x) Plant operator, including telephone number and facsimile number.

(2) *Change in ownership of company, plant site, or plant.* If you sold or purchased a declared company, plant site or plant, you must submit an amended declaration or report to BIS, either before the effective date of the change or within 30 days after the effective date of the change. The amended declaration or report must include the following information.

(i) Information that must be submitted to BIS by a company selling a declared plant site:

(A) Name of seller (i.e., name of the company selling a declared plant site);

(B) Name of declared plant site and U.S. Code Number for that plant site;

(C) Name of purchaser (i.e., name of company purchasing a declared plant site) and identity of the new owner and contact person for the purchaser, if known;

(D) Date of ownership transfer;

(E) Additional (e.g., unique) details on the sale of the plant site relevant to ownership or operational control over any portion of the declared plant site (e.g., whether the entire plant site or only a portion of the declared plant site has been sold to a new owner); and

(F) Details regarding whether the new owner will submit the declaration or report for the entire calendar year during which the ownership change occurred, or whether the previous owner and the new owner will submit separate declarations or reports for the periods of the calendar year during which each owned the plant site or trading company.

(*1*) If the new owner is responsible for submitting the declaration or report for

the entire current year, it must have in its possession the records for the period of the year during which the previous owner owned the plant site or trading company.

(*2*) If the previous owner and new owner will submit separate declarations or reports for the periods of the calendar year during which each owned the plant site or trading company, and, at the time of transfer of ownership, the previous owner's activities are not above the declaration or reporting thresholds set forth in § 714.1(a)(1) and § 714.2(a)(1) of the CWCR, respectively, the previous owner and the new owner must still submit declarations to BIS with the below threshold quantities indicated.

(*3*) If the part-year declarations submitted by the previous owner and the new owner are not, when combined, above the declaration threshold set forth in § 714.1(a)(1) of the CWCR, BIS will return the declarations without action as set forth in § 714.5 of the CWCR.

(*4*) If part-year reports are not, when combined, above the reporting threshold set forth in § 714.2(a)(1) of the CWCR, BIS will return the reports without action as set forth in § 714.5 of the CWCR.

(ii) Information that must be submitted to BIS by the company purchasing a declared plant site:

(A) Name of purchaser (i.e., name of individual or company purchasing a declared plant site);

(B) Mailing address of purchaser;

(C) Name of declaration point of contact (D–POC) for the purchaser, including telephone number, facsimile number, and e-mail address;

(D) Name(s) of inspection point(s)s of contact (I–POC) for the purchaser, including telephone number, facsimile number, and e-mail address(es);

(E) Name of the declared plant site and U.S. Code Number for that plant site;

(F) Location of the declared plant site;

(G) Operator of the declared plant site, including telephone number, and facsimile number;

(H) Name of plant where Schedule 3 production exceeds the declaration threshold;

(I) Owner of plant where Schedule 3 production exceeds the declaration threshold;

(J) Operator of plant where Schedule 3 production exceeds the declaration threshold; and

(K) Details on the next declaration or report submission on whether the new owner will submit the declaration or report for the entire calendar year during which the ownership change occurred, or whether the previous owner and new owner will submit separate declarations or reports for the periods of the calendar year during which each owned the plant site or trading company.

Note 1 to § 714.4(c): You must submit an amendment to your most recently submitted declaration or report for declaring changes to internal company information (e.g., company name change) or changes in ownership of a facility or trading company that have occurred since the submission of this declaration or report. BIS will process the amendment to ensure current information is on file regarding the facility or trading company (e.g., for inspection notifications and correspondence) and will also forward the amended declaration to the OPCW to ensure that they also have current information on file regarding your facility or trading company.

Note 2 to § 714.4(c): You may notify BIS of change in ownership via a letter to the address given in § 711.6 of the CWCR. If you are submitting an amended declaration or report, use Form B to address details regarding the sale of the declared plant site or trading company.

Note 3 to § 714.4(c): For ownership changes, the declared plant site or trading company will maintain its original U.S. Code Number, unless the plant site or trading company is sold to multiple owners, at which time BIS will assign new U.S. Code Numbers.

(d) *Inspection-related amendments.* If, following the completion of an inspection (see parts 716 and 717 of the CWCR), you are required to submit an amended declaration based on the final inspection report, BIS will notify you in writing of the information to be amended pursuant to §§ 716.10 and 717.5(b) of the CWCR. Amended declarations must be submitted to BIS no later than 45 days following your receipt of BIS's post-inspection letter.

(e) *Non-substantive changes.* If, subsequent to the submission of your declaration or report to BIS, you discover one or more non-substantive typographical errors in your declaration or report, you are not required to submit an amended declaration or report to BIS. Instead, you may correct these errors in a subsequent declaration or report.

(f) *Documentation required for amended declarations or reports.* If you are required to submit an amended declaration or report to BIS pursuant to paragraph (a), (b), (c), or (d) of this section, you must submit either:

(1) A letter containing all of the corrected information required, in accordance with the provisions of this section, to amend your declaration or report; or

(2) Both of the following:

(i) A new Certification Form; and

(ii) The specific forms required for the declaration or report type being amended (*e.g.*, annual declaration on past activities) containing the corrected information required, in accordance with the requirements of this section, to amend your declaration or report.

§ 714.5 Declarations and reports returned without action by BIS.

If you submit a declaration or report and BIS determines that the information contained therein is not required by the CWCR, BIS will return the original declaration or report to you, without action, accompanied by a letter explaining BIS's decision. In order to protect your confidential business information, BIS will not maintain a copy of any declaration or report that is returned without action. However, BIS will maintain a copy of the RWA letter.

§ 714.6 Deadlines for submission of Schedule 3 declarations, reports, and amendments.

Declarations, reports, and amendments required under this part must be postmarked by the appropriate date identified in Supplement No. 2 to this part 714 of the CWCR. Required declarations, reports, and amendments include:

(a) Annual declaration on past activities (production of Schedule 3 chemicals during the previous calendar year);

(b) Annual report on exports and imports of Schedule 3 chemicals from plant sites, trading companies, and other persons subject to the CWCR (during the previous calendar year);

(c) Combined declaration and report (production of Schedule 3 chemicals, as well as exports or imports of the same or different Schedule 3 chemicals, by a declared plant site during the previous calendar year);

(d) Annual declaration on anticipated activities (anticipated production of Schedule 3 chemicals during the next calendar year);

(e) Declaration on Additionally Planned Activities (additionally planned production of Schedule 3 chemicals); and

(f) Amended declaration and report, including combined declaration and report.

SUPPLEMENT NO. 1 TO PART 714.—SCHEDULE 3 CHEMICALS

	(CAS registry number)
A. Toxic chemicals:	
(1) Phosgene: Carbonyl dichloride	(75–44–5)
(2) Cyanogen chloride	(506–77–4)
(3) Hydrogen cyanide	(74–90–8)
(4) Chloropicrin: Trichloronitromethane	(76–06–2)
B. Precursors:	
(5) Phosphorus oxychloride	(10025–87–3)
(6) Phosphorus trichloride	(7719–12–2)
(7) Phosphorus pentachloride	(10026–13–8)
(8) Trimethyl phosphite	(121–45–9)
(9) Triethyl phosphite	(122–52–1)
(10) Dimethyl phosphite	(868–85–9)
(11) Diethyl phosphite	(762–04–9)
(12) Sulfur monochloride	(10025–67–9)
(13) Sulfur dichloride	(10545–99–0)
(14) Thionyl chloride	(7719–09–7)
(15) Ethyldiethanolamine	(139–87–7)
(16) Methyldiethanolamine	(105–59–9)
(17) Triethanolamine	(102–71–6)

Note to Supplement No. 1: Refer to Supplement No. 1 to part 774 of the Export Administration Regulations (the Commerce Control List), ECCNs 1C350 and 1C355, for export controls related to Schedule 3 chemicals.

SUPPLEMENT NO. 2 TO PART 714.—DEADLINES FOR SUBMISSION OF SCHEDULE 3 DECLARATIONS, REPORTS, AND AMENDMENTS

Declarations	Applicable forms	Due dates
Annual Declaration on Past Activities (previous calendar year)—Declared plant site (production).	Certification, 3–1, 3–2, 3–3 (if also exported or imported), A (as appropriate), B (optional).	February 28 of the year following any calendar year in which the production of a Schedule 3 chemical exceeded the declaration threshold in §714.1(a)(1)(i) of the CWCR.
Annual Report on Exports and Imports (previous calendar year)—Plant site, trading company, other persons.	Certification, 3–1, 3–3.3 and 3–3.4, A (as appropriate), B (optional).	February 28 of the year following any calendar year in which exports or imports of a Schedule 3 chemical by a plant site, trading company, or other person subject to the CWCR (as described in §714.2(a) of the CWCR) exceeded the threshold in §714.2(a) of the CWCR.
Combined Declaration & Report	Certification, 3–1, 3–2, and 3–3, A (as appropriate), B (optional).	February 28 of the year following any calendar year in which the production of a Schedule 3 chemical and the export or import of the same or a different Schedule 3 chemical by a declared plant site exceeded the applicable thresholds in §§714.1(a)(1)(i) and 714.2(a), respectively, of the CWCR.
Annual Declaration on Anticipated Activities (Production) (next calendar year).	Certification, 3–1, 3–2, 3–3.2, A (as appropriate), B (optional).	September 3 of the year prior to any calendar year in which Schedule 3 production is anticipated to occur.
Declaration on Additionally Planned Activities	Certification, 3–1, 3–3.1 and 3–3.2, A (as appropriate), B (optional).	15 calendar days before the additionally planned activity begins.
Amended Declaration	Certification, 3–1, 3–2, 3–3.	
—Declaration information		—15 calendar days after change in information.
—Company information		—30 calendar days after change in information.
—Post-inspection letter		—45 calendar days after receipt of letter.
Amended Report	Certification, 3–1, 3–2, 3–3, A (as appropriate), B (optional).	—15 calendar days after change in information.
Amended Combined Declaration & Report	Certification, 3–1, 3–2, 3–3, A (as appropriate), B (optional).	—15 calendar days after change in information.

PART 715—ACTIVITIES INVOLVING UNSCHEDULED DISCRETE ORGANIC CHEMICALS (UDOCs)

Sec.

715.1 Annual declaration requirements for production by synthesis of unscheduled discrete organic chemicals (UDOCs).
715.2 Amended declaration.
715.3 Declarations returned without action by BIS.
715.4 Deadlines for submitting UDOC declarations, no changes authorization forms, and amendments.
Supplement No. 1 to Part 715—Definition of an Unscheduled Discrete Organic Chemical

Supplement No. 2 to Part 715—Examples of Unscheduled Discrete Organic Chemicals (UDOCS) and UDOC Production

Supplement No. 3 to Part 715—Deadlines for Submission of Declarations, No Changes Authorization Forms, and Amendments for Unscheduled Discrete Organic Chemical (UDOC) Facilities

Authority: 22 U.S.C. 6701 *et seq.*; E.O. 13128, 64 FR 36703, 3 CFR 1999 Comp., p. 199.

§ 715.1 Annual declaration requirements for production by synthesis of unscheduled discrete organic chemicals (UDOCs).

(a) *Declaration of production by synthesis of UDOCs for purposes not prohibited by the CWC.*—(1) *Production quantities that trigger the declaration requirement.* See § 711.6 of the CWCR for information on obtaining the forms you will need to declare production of unscheduled discrete organic chemicals. You must complete the forms specified in paragraph (b) of this section if your plant site produced by synthesis:

(i) In excess of 200 metric tons aggregate of all UDOCs (including all UDOCs containing the elements phosphorus, sulfur or fluorine, referred to as ''PSF chemicals'') during the previous calendar year; or

(ii) In excess of 30 metric tons of an individual PSF chemical at one or more plants at your plant site during the previous calendar year.

Note to § 715.1(a)(1)(ii): In calculating the aggregate production quantity of each individual PSF chemical produced by a PSF plant, do not include production of a PSF chemical that was produced in quantities less than 30 metric tons. Include only production quantities from those PSF plants that produced more than 30 metric tons of an individual PSF chemical.

(2) *UDOCs subject to declaration requirements under this part.* (i) UDOCs subject to declaration requirements under this part are those produced by synthesis that have been isolated for:

(A) Use; or

(B) Sale as a specific end product.

(ii) *Exemptions.* (A) Polymers and oligomers consisting of two or more repeating units;

(B) Chemicals and chemical mixtures produced through a biological or biomediated process;

(C) Products from the refining of crude oil, including sulfur-containing crude oil;

(D) Metal carbides (i.e., chemicals consisting only of metal and carbon); and

(E) UDOCs produced by synthesis that are ingredients or by-products in foods designed for consumption by humans and/or animals.

Note to § 715.1(a)(2): See Supplement No. 2 to this part 715 for examples of UDOCs subject to the declaration requirements of this part, and for examples of activities that are not considered production by synthesis.

(3) *Exemptions for UDOC plant sites.* UDOC plant sites that exclusively produced hydrocarbons or explosives are exempt from UDOC declaration requirements. For the purposes of this part, the following definitions apply for hydrocarbons and explosives:

(i) Hydrocarbon means any organic compound that contains only carbon and hydrogen; and

(ii) Explosive means a chemical (or a mixture of chemicals) that is included in Class 1 of the United Nations Organization hazard classification system.

(b) *Types of declaration forms to be used.*—(1) *Annual declaration on past activities.* You must complete the *Certification Form and Form UDOC* (consisting of two pages), unless there are no changes from the previous year's declaration and you submit a *No Changes Authorization Form* pursuant to paragraph (b)(2) of this section. Attach Form A as appropriate; Form B is optional.

(2) *No Changes Authorization Form.* You may complete the *No Changes Authorization Form* if there are no updates or changes to any information (except the certifying official and dates signed and submitted) in your plant site's previously submitted annual declaration on past activities. Your plant site's activities will be declared to the OPCW and subject to inspection, if applicable, based upon the data reported in the most recent UDOC Declaration that you submitted to BIS.

Note to § 715.1(b)(2): If, after submitting the *No Changes Authorization Form,* you have changes to information, you must submit a complete amendment to the annual declaration on past activities. See § 715.2 of the CWCR.

(c) *''Declared'' UDOC plant site.* A plant site that submitted a declaration pursuant to paragraph (a)(1) of this section is a ''declared'' UDOC plant site.

(d) *Routine inspections of declared UDOC plant sites.* A ''declared'' UDOC plant site is subject to routine inspection by the Organization for the Prohibition of Chemical Weapons (see part 716 of the CWCR) if it produced by synthesis more than 200 metric tons aggregate of UDOCs during the previous calendar year.

§ 715.2 Amended declaration.

In order for BIS to maintain accurate information on previously submitted plant site declarations, including current information necessary to facilitate inspection notifications and activities or to communicate declaration requirements, amended declarations will be required under the following circumstances described in this section. This section applies only to annual declarations on past activities submitted for the previous calendar year, unless specified otherwise in a final inspection report.

(a) *Changes to information that directly affects a declared plant site's Annual Declaration of Past Activities (ADPA) which was previously submitted to BIS.* You must submit an amended declaration to BIS within 15 days of any change in the following information:

(1) Product group codes for UDOCs produced in quantities exceeding the applicable declaration threshold specified in § 715.1(a)(1) of the CWCR;

(2) Approximate number of plants at the declared plant site that produced any amount of UDOCs (including all PSF chemicals);

(3) Aggregate amount of production (by production range) of UDOCs produced by all plants at the declared plant site;

(4) Exact number of plants at the declared plant site that individually produced more than 30 metric tons of a single PSF chemical; and

(5) Production range of each plant at the declared plant site that individually produced more than 30 metric tons of a single PSF chemical.

(b) *Changes to company and plant site information submitted in the ADPA that must be maintained by BIS.*—(1) *Internal company changes.* You must submit an amended declaration to BIS within 30 days of any change in the following information:

(i) Name of declaration point of contact (D–POC), including telephone number, facsimile number, and e-mail address;

(ii) Name(s) of inspection point(s) of contact (I–POC), including telephone number, facsimile number(s) and e-mail address(es);

(iii) Company name (see 715.2(b)(2) for other company changes);

(iv) Company mailing address;

(v) Plant site name;

(vi) Plant site owner, including telephone number and facsimile number; and

(vii) Plant site operator, including telephone number and facsimile number.

(2) *Change in ownership of company or plant site.* If you sold or purchased a declared plant site, you must submit an amended declaration to BIS, either before the effective date of the change or within 30 days after the effective date of

the change. The amended declaration must include the following information.

(i) Information that must be submitted to BIS by the company selling a declared plant site:

(A) Name of seller (i.e., name of company selling a declared plant site);

(B) Name of declared plant site name and U.S. Code Number for that plant site;

(C) Name of purchaser (i.e., name of new company purchasing a declared plant site) and identity of contact person for the purchaser, if known;

(D) Date of ownership transfer or change;

(E) Additional details on the sale of the declared plant site relevant to ownership or operational control over any portion of the declared plant site (e.g., whether the entire plant site or only a portion of the declared plant site has been sold to a new owner); and

(F) Details regarding whether the new owner will submit the declaration for the entire calendar year during which the ownership change occurred, or whether the previous owner and new owner will submit separate declarations for the periods of the calendar year during which each owned the plant site.

(*1*) If the new owner is responsible for submitting the declaration for the entire current year, it must have in its possession the records for the period of the year during which the previous owner owned the plant site.

(*2*) If the previous owner and new owner will submit separate declarations for the periods of the calendar year during which each owned the plant site, and, if at the time of transfer of ownership, the previous owner's activities are not above the declaration thresholds set forth in § 715.1(a)(1) of the CWCR, the previous owner and the new owner must still submit declarations to BIS with the below threshold quantities indicated.

(*3*) If the part-year declarations submitted by the previous owner and the new owner are not, when combined, above the declaration threshold set forth in § 715.1(a)(1) of the CWCR, BIS will return the declarations without action as set forth in § 715.3 of the CWCR.

(ii) Information that must be submitted to BIS by the company purchasing a declared plant site:

(A) Name of purchaser (i.e., name of individual or company purchasing a declared plant site);

(B) Mailing address of purchaser;

(C) Name of declaration point of contact (D–POC) for the purchaser, including telephone number, facsimile number, and e-mail address;

(D) Name(s) of inspection point(s) of contact (I–POC) for the purchaser, including telephone number(s), facsimile number(s), and e-mail address(es);

(E) Name of the declared plant site and U.S. Code Number for that plant site;

(F) Location of the declared plant site;

(G) Name of plant site where the production of UDOCs exceeds the applicable declaration threshold;

(H) Owner of plant site where the production of UDOCs exceeds the applicable declaration threshold, including telephone number and facsimile number;

(I) Operator of plant site where the production of UDOCs exceeds the applicable declaration threshold, including telephone number and facsimile number; and

(J) Details on the next declaration or report submission on whether the new owner will submit the declaration or report for the entire calendar year during which the ownership change occurred, or whether the previous owner and new owner will submit separate declarations or report for the periods of the calendar year during which each owned the plant site.

Note 1 to § 715.2(b): You must submit an amendment to your most recently submitted declaration or report for declaring changes to internal company information (e.g., company name change) or changes in ownership of a facility or trading company that have occurred since the submission of this declaration or report. BIS will process the amendment to ensure current information is on file regarding the facility or trading company (e.g., for inspection notifications and correspondence) and will also forward the amended declaration to the OPCW to ensure that they also have current information on file regarding your facility or trading company.

Note 2 to § 715.2(b): You may notify BIS of change in ownership via a letter to the address given in § 711.6 of the CWCR. If you are submitting an amended declaration, use Form B to address details regarding the sale of the declared plant site.

Note 3 to § 715.2(b): For ownership changes, the declared plant site will maintain its original U.S. Code Number, unless the plant site is sold to multiple owners, at which time BIS will assign new U.S. Code Numbers.

(c) *Inspection-related amendments.* If, following completion of an inspection (see part 716 or 717 of the CWCR), you are required to submit an amended declaration based on the final inspection report, BIS will notify you in writing of the information that will be required pursuant to §§ 716.10 and 717.5 of the CWCR. You must submit an amended declaration to BIS no later than 45 days following your receipt of BIS's post-inspection letter.

(d) *Non-substantive changes.* If, subsequent to the submission of your declaration to BIS, you discover one or more non-substantive typographical errors in your declaration, you are not required to submit an amended declaration to BIS. Instead, you may correct these errors in a subsequent declaration.

(e) *Documentation required for amended declarations.* If you are required to submit an amended declaration to BIS pursuant to paragraph (a), (b), or (c) of this section, you must submit either:

(1) A letter containing all of the corrected information required, in accordance with the provisions of this section, to amend your declaration; or

(2) Both of the following:

(i) A new Certification Form; and

(ii) The specific form required for the declaration containing the corrected information required, in accordance with the requirements of this section, to amend your declaration.

§ 715.3 Declarations returned without action by BIS.

If you submit a declaration and BIS determines that the information contained therein is not required by the CWCR, BIS will return the original declaration to you, without action, accompanied by a letter explaining BIS's decision. In order to protect your confidential business information, BIS will not maintain a copy of any declaration that is returned without action. However, BIS will maintain a copy of the RWA letter.

§ 715.4 Deadlines for submitting UDOC declarations, no changes authorization forms, and amendments.

Declarations, no changes authorization forms, and amendments required under this part must be postmarked by the appropriate dates identified in Supplement No. 3 to this part 715 of the CWCR. Required documents under this part include:

(a) *Annual Declaration on Past Activities* (UDOC production during the previous calendar year);

(b) *No Changes Authorization Form* (may be completed and submitted to BIS when there are no changes to any information in your plant site's previously submitted annual declaration on past activities, except the certifying official and the dates signed and submitted); and

(c) Amended declaration.

Supplement No. 1 to Part 715—Definition of an Unscheduled Discrete Organic Chemical

Unscheduled discrete organic chemical means any chemical: (1) Belonging to the class of chemical compounds consisting of all compounds of carbon except for its oxides, sulfides and metal carbonates identifiable by chemical name, by structural formula, if known, and by Chemical Abstract Service registry number, if assigned; and (2) that is not contained in the Schedules of Chemicals (see Supplements No. 1 to parts 712 through 714 of the CWCR). Unscheduled discrete organic chemicals subject to declaration under this part are those produced by synthesis that are isolated for use or sale as a specific end-product.

Note: Carbon oxides consist of chemical compounds that contain only the elements carbon and oxygen and have the chemical formula C_xO_y, where x and y denote integers. The two most common carbon oxides are carbon monoxide (CO) and carbon dioxide (CO_2). Carbon sulfides consist of chemical compounds that contain only the elements carbon and sulfur, and have the chemical formula C_aS_b, where a and b denote integers. The most common carbon sulfide is carbon disulfide (CS_2). Metal carbonates consist of chemical compounds that contain a metal (i.e., the Group I Alkalis, Groups II Alkaline Earths, the Transition Metals, or the elements aluminum, gallium, indium, thallium, tin, lead, bismuth or polonium), and the elements carbon and oxygen. Metal carbonates have the chemical formula $M_d(CO_3)_e$, where d and e denote integers and M represents a metal. Common metal carbonates are sodium carbonate (Na_2CO_3) and calcium carbonate (C_aCO_3). In addition, metal carbides or other compounds consisting of only a metal, as described in this Note, and carbon (e.g., calcium carbide (C_aC_2)), are exempt from declaration requirements (see § 715.1(a)(2)(ii)(D) of the CWCR).

Supplement No. 2 to Part 715—Examples of Unscheduled Discrete Organic Chemicals (UDOCs) and UDOC Production

(1) Examples of UDOCs not subject to declaration include:

(i) UDOCs produced coincidentally as by-products that are not isolated for use or sale as a specific end product, and are routed to, or escape from, the waste stream of a stack, incinerator, or waste treatment system or any other waste stream;

(ii) UDOCs, contained in mixtures, which are produced coincidentally and not isolated for use or sale as a specific end-product;

(iii) UDOCs produced by recycling (i.e., involving one of the processes listed in paragraph (3) of this supplement) of previously declared UDOCs;

(iv) UDOCs produced by the mixing (i.e., the process of combining or blending into one mass) of previously declared UDOCs; and

(v) UDOCs that are intermediates and that are used in a single or multi-step process to produce another declared UDOC.

(2) Examples of UDOCs that you must declare under part 715 of the CWCR include, but are not limited to, the following, unless they are not isolated for use or sale as a specific end product:

(i) Acetophenone (CAS #98–86–2);

(ii) 6-Chloro-2-methyl aniline (CAS #87–63–8);

(iii) 2-Amino-3-hydroxybenzoic acid (CAS #548–93–6); and

(iv) Acetone (CAS #67–64–1).

(3) Examples of activities that are not considered ''production by synthesis'' under part 715 of the CWCR, which means the end products resulting from such activities would not be declared under part 715, are as follows:

(i) Fermentation;

(ii) Extraction;

(iii) Purification;

(iv) Distillation; and

(v) Filtration.

Supplement No. 3 to Part 715.—Deadlines for Submission of Declarations, No Changes Authorization Forms, and Amendments for Unscheduled Discrete Organic Chemical (UDOC) Facilities

Declarations	Applicable forms	Due dates
Annual Declaration on Past Activities (previous calendar year)—Declared plant site.	Certification, UDOC, A (as appropriate), B (optional).	February 28 of the year following any calendar year in which the production of UDOCs exceeded the applicable declaration threshold in § 715.1(a)(1) of the CWCR.
No Changes Authorization Form (declaration required, but no changes to data contained in previously submitted annual declaration on past activities (previous calendar year)—Declared plant site.	No Changes Authorization Form	February 28 of the year following any calendar year in which the production of UDOCs exceeded the applicable declaration threshold in § 715.1(a)(1) of the CWCR.
Amended Declaration	Certification, UDOC, A (as appropriate), B (optional).	
—Declaration information		—15 calendar days after change in information.
—Company information		—30 calendar days after change in information.
—Post-inspection letter		—45 calendar days after receipt of letter.

PART 716—INITIAL AND ROUTINE INSPECTIONS OF DECLARED FACILITIES

Sec.

716.1 General information on the conduct of initial and routine inspections.
716.2 Purposes and types of inspections of declared facilities.
716.3 Consent to inspections; warrants for inspections.
716.4 Scope and conduct of inspections.
716.5 Notification, duration and frequency of inspections.
716.6 Facility agreements.
716.7 Samples.
716.8 On-site monitoring of Schedule 1 facilities.
716.9 Report of inspection-related costs.
716.10 Post-inspection activities.
Supplement No. 1 to Part 716—Notification, Duration, and Frequency of Inspections
Supplement No. 2 to Part 716—[Reserved]
Supplement No. 3 to Part 716—[Reserved]

Authority: 22 U.S.C. 6701 et seq.; E.O. 13128, 64 FR 36703, 3 CFR 1999 Comp., p. 199.

§ 716.1 General information on the conduct of initial and routine inspections.

This part provides general information about the conduct of initial and routine inspections of declared facilities subject to inspection under CWC Verification Annex Part VI(E), Part VII(B), Part VIII(B) and Part IX(B). See part 717 of the CWCR for provisions concerning challenge inspections.

(a) *Overview.* Each State Party to the CWC, including the United States, has agreed to allow certain inspections of declared facilities by inspection teams employed by the Organization for the Prohibition of Chemical Weapons (OPCW) to ensure that activities are consistent with obligations under the Convention. BIS is responsible for leading, hosting and escorting inspections of all facilities subject to the provisions of the CWCR (see § 710.2 of the CWCR).

(b) *Declared facilities subject to initial and routine inspections*—(1) *Schedule 1 facilities.* (i) Your declared facility is subject to inspection if it produced in excess of 100 grams aggregate of Schedule 1 chemicals in the previous calendar year or anticipates producing in excess of 100 grams aggregate of Schedule 1 chemicals during the next calendar year.

(ii) If you are a new Schedule 1 production facility pursuant to § 712.4 of the CWCR, your facility is subject to an initial inspection within 200 days of submitting an initial declaration.

Note to § 716.1(b)(1): All Schedule 1 facilities submitting a declaration are subject to inspection.

(2) *Schedule 2 plant sites*—(i) *Inspection thresholds for Schedule 2 plant sites.* Your declared plant site is subject to inspection if at least one plant on your plant site produced, processed or consumed, in any of the three previous calendar years, or you anticipate that at least one plant on your plant site will produce, process or consume in the next calendar year, any Schedule 2 chemical in excess of the following:

(A) 10 kg of chemical BZ: 3-Quinuclidinyl benzilate (see Schedule 2, Part A, paragraph 3 in Supplement No. 1 to part 713 of the CWCR);

(B) 1 metric ton of chemical PFIB: 1,1,3,3,3-Pentafluoro-2(trifluoromethyl)-1-propene or any chemical belonging to the Amiton family (see Schedule 2, Part A, paragraphs 1 and 2 in Supplement No. 1 to part 713 of the CWCR); or

(C) 10 metric tons of any chemical listed in Schedule 2, Part B (see Supplement No. 1 to part 713 of the CWCR).

(ii) *Initial inspection for new Schedule 2 plant sites.* Your declared plant site is subject to an initial inspection within the first year after submitting a declaration, if at least one plant on your plant site produced, processed or consumed in any of the three previous years, or you anticipate that at least one plant on your plant site will produce, process or consume in the next calendar year, any Schedule 2 chemical in excess of the threshold quantities set forth in paragraphs (b)(2)(i)(A) through (C) of this section.

Note to § 716.1(b)(2): The applicable inspection threshold for Schedule 2 plant sites is ten times higher than the applicable declaration threshold. Only declared plant sites, comprising at least one declared plant that exceeds the applicable inspection threshold, are subject to inspection.

(3) *Schedule 3 plant sites.* Your declared plant site is subject to inspection if the declared plants on your plant site produced during the previous calendar year, or you anticipate they will produce in the next calendar year, in excess of 200 metric tons aggregate of any Schedule 3 chemical.

Note to § 716.1(b)(3): The methodology for determining a declarable and inspectable plant site is different. A Schedule 3 plant site that submits a declaration is subject to inspection only if the aggregate production of a Schedule 3 chemical at all declared plants on the plant site exceeds 200 metric tons.

(4) *Unscheduled discrete organic chemical plant sites.* Your declared plant site is subject to inspection if it produced by synthesis more than 200 metric tons aggregate of unscheduled discrete organic chemicals (UDOC) during the previous calendar year.

Note 1 to § 716.1(b)(4): You must include amounts of unscheduled discrete organic chemicals containing phosphorus, sulfur or fluorine in the calculation of your plant site's aggregate production of unscheduled discrete organic chemicals.

Note 2 to § 716.1(b)(4): All UDOC plant sites that submit a declaration based on § 715.1(a)(1)(i) of the CWCR are subject to a routine inspection.

(c) *Responsibilities of the Department of Commerce.* As the host and escort for the international Inspection Team for all inspections of facilities subject to the provisions of the CWCR under this part, BIS will:

(1) Lead on-site inspections;

(2) Provide Host Team notification to the facility of an impending inspection;

(3) Take appropriate action to obtain an administrative warrant in the event the facility does not consent to the inspection;

(4) Dispatch an advance team to the vicinity of the site to provide administrative and logistical support for the impending inspection and, upon request, to assist the facility with inspection preparation;

(5) Escort the Inspection Team on-site throughout the inspection process;

(6) Assist the Inspection Team with verification activities;

(7) Negotiate the development of a site-specific facility agreement, if appropriate (see § 716.6); and

(8) Ensure that an inspection adheres to the Convention, the Act and any warrant issued thereunder, and a site-specific facility agreement, if concluded.

§ 716.2 Purposes and types of inspections of declared facilities.

(a) *Schedule 1 facilities*—(1) *Purposes of inspections.* The aim of inspections of Schedule 1 facilities is to verify that:

(i) The facility is not used to produce any Schedule 1 chemical, except for the declared Schedule 1 chemicals;

(ii) The quantities of Schedule 1 chemicals produced, processed or consumed are correctly declared and consistent with needs for the declared purpose; and

(iii) The Schedule 1 chemical is not diverted or used for purposes other than those declared.

(2) *Types of inspections*—(i) *Initial inspections.* (A) During initial inspections of declared Schedule 1 facilities, in addition to the verification activities listed in paragraph (a)(1) of this section, the Host Team and the Inspection Team will draft site-specific facility agreements (see § 716.6 of the CWCR) for the conduct of routine inspections.

(B) For new Schedule 1 production facilities declared pursuant to § 712.4 of the CWCR, the U.S. National Authority, in coordination with BIS, will conclude a facility agreement with the OPCW before the facility begins producing above 100 grams aggregate of Schedule 1 chemicals.

(ii) *Routine inspections.* During routine inspections of declared Schedule 1 facilities, the verification activities listed in paragraph (a)(1) of this section will be carried out pursuant to site-specific facility agreements (see § 716.6 of the CWCR) developed during the initial inspections and concluded between the U.S. Government and the OPCW pursuant to the Convention.

(b) *Schedule 2 plant sites*—(1) *Purposes of inspections.* (i) The general aim of inspections of declared Schedule 2 plant sites is to verify that activities are in accordance with obligations under the Convention and consistent with the information provided in declarations. Particular aims of inspections of declared Schedule 2 plant sites are to verify:

(A) The absence of any Schedule 1 chemical, especially its production, except in accordance with the provisions of the Convention;

(B) Consistency with declarations of production, processing or consumption of Schedule 2 chemicals; and

(C) Non-diversion of Schedule 2 chemicals for activities prohibited under the Convention.

(ii) During initial inspections, Inspection Teams shall collect information to determine the frequency and intensity of subsequent inspections by assessing the risk to the object and purpose of the Convention posed by the relevant chemicals, the characteristics of the plant site and the nature of the activities carried out there. The

Inspection Team will take the following criteria into account, inter alia:

(A) The toxicity of the scheduled chemicals and of the end-products produced with them, if any;

(B) The quantity of the scheduled chemicals typically stored at the inspected site;

(C) The quantity of feedstock chemicals for the scheduled chemicals typically stored at the inspected site;

(D) The production capacity of the Schedule 2 plants; and

(E) The capability and convertibility for initiating production, storage and filling of toxic chemicals at the inspected site.

(2) *Types of inspections*—(i) *Initial inspections.* During initial inspections of declared Schedule 2 plant sites, in addition to the verification activities listed in paragraph (b)(1) of this section, the Host Team and the Inspection Team will generally draft site-specific facility agreements for the conduct of routine inspections (see § 716.6 of the CWCR).

(ii) *Routine inspections.* During routine inspections of declared Schedule 2 plant sites, the verification activities listed in paragraph (b)(1) of this section will be carried out pursuant to any appropriate site-specific facility agreements developed during the initial inspections (see § 716.6 of the CWCR), and concluded between the U.S. Government and the OPCW pursuant to the Convention and the Act.

(c) *Schedule 3 plant sites*—(1) *Purposes of inspections.* The general aim of inspections of declared Schedule 3 plant sites is to verify that activities are consistent with the information provided in declarations. The particular aim of inspections is to verify the absence of any Schedule 1 chemical, especially its production, except in accordance with the Convention.

(2) *Routine inspections.* During routine inspections of declared Schedule 3 plant sites, in addition to the verification activities listed in paragraph (c)(1) of this section, the Host Team and the Inspection Team may draft site-specific facility agreements for the conduct of subsequent routine inspections (see § 716.6 of the CWCR). Although the Convention does not require facility agreements for declared Schedule 3 plant sites, the owner, operator, occupant or agent in charge of a plant site may request one. The Host Team will not seek a facility agreement if the owner, operator, occupant or agent in charge of the plant site does not request one. Subsequent routine inspections will be carried out pursuant to site-specific facility agreements, if applicable.

(d) *Unscheduled discrete organic chemical plant sites*—(1) *Purposes of inspections.* The general aim of inspections of declared UDOC plant sites is to verify that activities are consistent with the information provided in declarations. The particular aim of inspections is to verify the absence of any Schedule 1 chemical, especially its production, except in accordance with the Convention.

(2) *Routine inspections.* During routine inspections of declared UDOC plant sites, in addition to the verification activities listed in paragraph (d)(1) of this section, the Host Team and the Inspection Team may develop draft site-specific facility agreements for the conduct of subsequent routine inspections (see § 716.6 of the CWCR). Although the Convention does not require facility agreements for declared UDOC plant sites, the owner, operator, occupant or agent in charge of a plant site may request one. The Host Team will not seek a facility agreement if the owner, operator, occupant or agent in charge of the plant site does not request one. Subsequent routine inspections will be carried out pursuant to site-specific facility agreements, if applicable.

§ 716.3 Consent to inspections; warrants for inspections.

(a) The owner, operator, occupant or agent in charge of a facility may consent to an initial or routine inspection. The individual giving consent on behalf of the facility represents that he or she has the authority to make this decision for the facility.

(b) In instances where consent is not provided by the owner, operator, occupant or agent in charge for an initial or routine inspection, BIS will seek administrative warrants as provided by the Act.

§ 716.4 Scope and conduct of inspections.

(a) *General.* Each inspection shall be limited to the purposes described in § 716.2 of the CWCR and shall be conducted in the least intrusive manner, consistent with the effective and timely accomplishment of its purpose as provided in the Convention.

(b) *Scope.*—(1) *Description of inspections.* During inspections, the Inspection Team:

(i) Will receive a pre-inspection briefing from facility representatives;

(ii) Will visually inspect the facilities or plants producing scheduled chemicals or UDOCs, which may include storage areas, feed lines, reaction vessels and ancillary equipment, control equipment, associated laboratories, first aid or medical sections, and waste and effluent handling areas, as necessary to accomplish their inspection;

(iii) May visually inspect other parts or areas of the plant site to clarify an ambiguity that has arisen during the inspection;

(iv) May take photographs or conduct formal interviews of facility personnel;

(v) May examine relevant records; and

(vi) May take samples as provided by the Convention, the Act and consistent with the requirements set forth by the Director of the United States National Authority, at 22 CFR part 103, and the facility agreement, if applicable.

(2) *Scope of consent.* When an owner, operator, occupant, or agent in charge of a facility consents to an initial or routine inspection, he or she is consenting to provide access to the Inspection Team and Host Team to any area of the facility, any item located on the facility, interviews with facility personnel, and any records necessary for the Inspection Team to complete its mission pursuant to paragraph (a) of this section, except for information subject to export control under ITAR (22 CFR parts 120 through 130) (see paragraph (b)(3) of this section). When consent is granted for an inspection, the owner, operator, occupant, or agent in charge agrees to provide the same degree of access provided for under section 305 of the Act. The determination of whether the Inspection Team's request to inspect any area, building, item or record is reasonable is the responsibility of the Host Team Leader.

(3) *ITAR-controlled technology.* ITAR-controlled technology shall not be divulged to the Inspection Team without U.S. Government authorization (such technology includes, but is not limited to technical data related to Schedule 1 chemicals or Schedule 2 chemicals identified in Note 2 to Supplement No. 1 to Part 712 or Note 1 to Supplement No. 1 to Part 713, respectively, of the CWCR; also see 22 CFR Section 121.1, i.e., the United States Munitions List). Facilities being inspected are responsible for the identification of ITAR-controlled technology to the BIS Host Team, if known.

(c) *Pre-inspection briefing.* Upon arrival of the Inspection Team and Host Team at the inspection site and before commencement of the inspection, facility representatives will provide the Inspection Team and Host Team with a pre-inspection briefing on the facility, the activities carried out there, safety measures, and administrative and logistical arrangements necessary for the inspection, which may be aided with the use of maps and other

documentation as deemed appropriate by the facility. The time spent for the briefing will be limited to the minimum necessary and may not exceed three hours.

(1) The pre-inspection briefing will address:

(i) Facility health and safety issues and requirements, and associated alarm systems;

(ii) Declared facility activities, business and manufacturing operations;

(iii) Physical layout;

(iv) Delimitation of declared facility;

(v) Scheduled chemicals on the facility (declared and undeclared);

(vi) Block flow diagram or simplified process flow diagram;

(vii) Plants and units specific to declared operations;

(viii) Administrative and logistic information; and

(ix) Data declaration updates/revisions.

(2) The pre-inspection briefing may also address, inter alia:

(i) Introduction of key facility personnel;

(ii) Management, organization and history;

(iii) Confidential business information concerns;

(iv) Types and location of records/documents;

(v) Draft facility agreement, if applicable; and

(vi) Proposed inspection plan.

(d) *Visual plant inspection.* The Inspection Team may visually inspect the declared plant or facility and other areas or parts of the plant site as agreed by the Host Team Leader after consulting with the facility representative.

(e) *Records review.* The facility must provide the Inspection Team with access to all supporting materials and documentation used by the facility to prepare declarations and to comply with the CWCR (see §§ 721.1 and 721.2 of the CWCR) and with appropriate accommodations in which the Inspection Team can review these supporting materials and documentation. Such access will be provided in appropriate formats (e.g., paper copies, electronic remote access by computer, microfilm, or microfiche) through the U.S. Government Host Team to Inspection Teams during the inspection period or as otherwise agreed upon by the Inspection Team and Host Team Leader. If a facility does not have access to records for activities that took place under previous ownership, because such records were not transferred to the current owner of the facility by the previous owner (e.g., as part of the contract involving the sale of the facility), the previous owner must make such records available to the Host Team for provision to the Inspection Team in accordance with section 305 of the Act. However, the current owner of a facility, upon receiving notification of an inspection (see § 716.5 of the CWCR), is responsible for informing BIS if the previous owner did not transfer records for activities that took place under the previous ownership—this will allow BIS to contact the previous owner of the facility, to arrange for access to such records, if BIS deems them relevant to the inspection activities.

(f) *Effect of facility agreements.* Routine inspections at facilities for which the United States has concluded a facility agreement with the OPCW will be conducted in accordance with the facility agreement. The existence of a facility agreement does not in any way limit the right of the owner, operator, occupant, or agent in charge of the facility to withhold consent to an inspection request.

(g) *Hours of inspections.* Consistent with the provisions of the Convention, the Host Team will ensure, to the extent possible, that each inspection is commenced, conducted, and concluded during ordinary working hours, but no inspection shall be prohibited or otherwise disrupted from commencing, continuing or concluding during other hours.

(h) *Health and safety regulations and requirements.* In carrying out their activities, the Inspection Team and Host Team shall observe federal, state, and local health and safety regulations and health and safety requirements established at the inspection site, including those for the protection of controlled environments within a facility and for personal safety. Such health and safety regulations and requirements will be set forth in, but will not necessarily be limited to, the facility agreement, if applicable.

(i) *Preliminary findings.* Upon completion of an inspection, the Inspection Team will meet with the Host Team and facility personnel to review the written preliminary findings of the Inspection Team and to clarify ambiguities. The Host Team will discuss the preliminary findings with the facility, and the Host Team Leader will take into consideration the facility's input when providing official comments on the preliminary findings to the Inspection Team. This meeting will be completed not later than 24 hours after the completion of the inspection.

§ 716.5 Notification, duration and frequency of inspections.

(a) *Inspection notification.*—(1)(i) *Content of notice.* Inspections of facilities may be made only upon issuance of written notice by the United States National Authority (USNA) to the owner and to the operator, occupant or agent in charge of the premises to be inspected. BIS will also provide a separate inspection notification to the inspection point of contact identified in declarations submitted by the facility. If the United States is unable to provide actual written notice to the owner and to the operator, occupant or agent in charge, BIS (or the Federal Bureau of Investigation, if BIS is unable) may post notice prominently at the facility to be inspected. The notice shall include all appropriate information provided by the OPCW to the USNA concerning:

(A) The type of inspection;

(B) The basis for the selection of the facility or location for the type of inspection sought;

(C) The time and date that the inspection will begin and the period covered by the inspection; and

(D) The names and titles of the Inspection Team members.

(ii) *Consent to inspection.* In addition to appropriate information provided by the OPCW in its notification to the USNA, BIS's inspection notification will request that the facility indicate whether it will consent to an inspection, and will state whether an advance team is available to assist the site in preparation for the inspection. If an advance team is available, facilities that request advance team assistance are not required to reimburse the U.S. Government for costs associated with these activities. If a facility does not agree to provide consent to an inspection within four hours of receipt of the inspection notification, BIS will seek an administrative warrant. The current owner of a facility, upon receiving notification of an inspection, is also responsible for informing BIS if the previous owner did not transfer (to the current owner) records for activities that took place under the previous ownership (see § 716.4(e) of the CWCR)—this will allow BIS to contact the previous owner of the facility, to arrange for access to such records, if BIS deems them relevant to the inspection activities.

(iii) The following table sets forth the notification procedures for inspection:

TABLE TO § 716.5(A)(1)

Activity	Agency action	Facility action
(A) OPCW notification inspection	(*1*) U.S. National Authority transmits actual written notice and inspection authorization to the owner and operator, occupant, or agent in charge via facsimile within 6 hours.	Acknowledges receipt of facsimile.
	(*2*) Upon notification from the U.S. National Authority, BIS immediately transmits inspection notification via facsimile to the inspection point of contract to ascertain whether the facility (*i*) grants consent and (*ii*) requests assistance in preparing for the inspection. In absence of consent within four hours of facility receipt, BIS intends to seek an administrative warrant.	(*A*) Indicated whether it grants consent. (*B*) May request advance team support. No requirement for reimbursement of U.S. Government's services.
(B) Preparation for inspection	(*1*) BIS advance team generally arrives in the vicinity of the facility to be inspected 1–2 days after OPCW notification for logistical and administrative preparations.	If advance team support is provided, facility works with the advance team on inspection-related issues.
	(*2*) If records for activities that took place under the previous ownership of the facility are deemed relevant to the inspection, BIS will contact the previous owner of the facility to arrange for access to any such records required under the CWCR that have not been transferred to the current owner.	The current owner of the facility must inform BIS if the previous owner of the facility did not transfer (to the current owner) records for activities that took place under the previous ownership.

(2) *Timing of notice.*—(i) *Schedule 1 facilities.* For declared Schedule 1 facilities, the Technical Secretariat will notify the USNA of an initial inspection not less than 72 hours prior to arrival of the Inspection Team in the United States, and will notify the USNA of a routine inspection not less than 24 hours prior to arrival of the Inspection Team in the United States. The USNA will provide written notice to the owner and to the operator, occupant or agent in charge of the premises within six hours of receiving notification from the OPCW Technical Secretariat or as soon as possible thereafter. BIS will provide Host Team notice to the inspection point of contact of the facility as soon as possible after the OPCW notifies the USNA of the inspection.

(ii) *Schedule 2 plant sites.* For declared Schedule 2 plant sites, the Technical Secretariat will notify the USNA of an initial or routine inspection not less than 48 hours prior to arrival of the Inspection Team at the plant site to be inspected. The USNA will provide written notice to the owner and to the operator, occupant or agent in charge of the premises within six hours of receiving notification from the OPCW Technical Secretariat or as soon as possible thereafter. BIS will provide Host Team notice to the inspection point of contact at the plant site as soon as possible after the OPCW notifies the USNA of the inspection.

(iii) *Schedule 3 and UDOC plant sites.* For declared Schedule 3 and UDOC plant sites, the Technical Secretariat will notify the USNA of a routine inspection not less than 120 hours prior to arrival of the Inspection Team at the plant site to be inspected. The USNA will provide written notice to the owner and to the operator, occupant or agent in charge of the premises within six hours of receiving notification from the OPCW Technical Secretariat or as soon as possible thereafter. BIS will provide Host Team notice to the inspection point of contact of the plant site as soon as possible after the OPCW notifies the USNA of the inspection.

(b) *Period of inspections.*—(1) *Schedule 1 facilities.* For a declared Schedule 1 facility, the Convention does not specify a maximum duration for an initial inspection. The estimated period of routine inspections will be as stated in the facility agreement, unless extended by agreement between the Inspection Team and the Host Team Leader, and will be based on the risk to the object and purpose of the Convention posed by the quantities of chemicals produced, the characteristics of the facility and the nature of the activities carried out there. The Host Team Leader will consult with the inspected facility on any request for extension of an inspection prior to making an agreement with the Inspection Team. Activities involving the pre-inspection briefing and preliminary findings are in addition to inspection activities. See § 716.4(c) and (i) of the CWCR for a description of these activities.

(2) *Schedule 2 plant sites.* For declared Schedule 2 plant sites, the maximum duration of initial and routine inspections shall be 96 hours, unless extended by agreement between the Inspection Team and the Host Team Leader. The Host Team Leader will consult with the inspected plant site on any request for extension of an inspection prior to making an agreement with the Inspection Team. Activities involving the pre-inspection briefing and preliminary findings are in addition to inspection activities. See § 716.4(c) and (i) of the CWCR for a description of these activities.

(3) *Schedule 3 and UDOC plant sites.* For declared Schedule 3 or UDOC plant sites, the maximum duration of routine inspections shall be 24 hours, unless extended by agreement between the Inspection Team and the Host Team Leader. The Host Team Leader will consult with the inspected plant site on any request for extension of an inspection prior to making an agreement with the Inspection Team. Activities involving the pre-inspection briefing and preliminary findings are in addition to inspection activities. See § 716.4(c) and (i) of the CWCR for a description of these activities.

(c) *Frequency of inspections.* The frequency of inspections is as follows:

(1) *Schedule 1 facilities.* As provided by the Convention, the frequency of inspections at declared Schedule 1 facilities is determined by the OPCW based on the risk to the object and purpose of the Convention posed by the

quantities of chemicals produced, the characteristics of the facility and the nature of the activities carried out at the facility. The frequency of inspections will be stated in the facility agreement.

(2) *Schedule 2 plant sites.* As provided by the Convention and the Act, the maximum number of inspections at declared Schedule 2 plant sites is two per calendar year per plant site. The OPCW will determine the frequency of routine inspections for each declared Schedule 2 plant site based on the Inspection Team's assessment of the risk to the object and purpose of the Convention posed by the relevant chemicals, the characteristics of the plant site, and the nature of the activities carried out there. The frequency of inspections will be stated in the facility agreement, if applicable.

(3) *Schedule 3 plant sites.* As provided by the Convention, no declared Schedule 3 plant site may receive more than two inspections per calendar year and the combined number of inspections of Schedule 3 and UDOC plant sites in the United States may not exceed 20 per calendar year.

(4) *UDOC plant sites.* As provided by the Convention, no declared UDOC plant site may receive more than two inspections per calendar year and the combined number of inspections of Schedule 3 and UDOC plant sites in the United States may not exceed 20 per calendar year.

§ 716.6 Facility agreements.

(a) *Description and requirements.* A facility agreement is a site-specific agreement between the U.S. Government and the OPCW. Its purpose is to define procedures for inspections of a specific declared facility that is subject to inspection because of the type or amount of chemicals it produces, processes or consumes.

(1) *Schedule 1 facilities.* The Convention requires that facility agreements be concluded between the United States and the OPCW for all declared Schedule 1 facilities. For new Schedule 1 production facilities declared pursuant to § 712.4 of the CWCR, the USNA, in coordination with the Department of Commerce, will conclude a facility agreement with the OPCW before the facility begins producing above 100 grams aggregate of Schedule 1 chemicals.

(2) *Schedule 2 plant sites.* The USNA will ensure that such facility agreements are concluded with the OPCW unless the owner, operator, occupant or agent in charge of the plant site and the OPCW Technical Secretariat agree that such a facility agreement is not necessary.

(3) *Schedule 3 and UDOC plant sites.* If the owner, operator, occupant or agent in charge of a declared Schedule 3 or UDOC plant site requests a facility agreement, the USNA will ensure that a facility agreement for such a plant site is concluded with the OPCW.

(b) *Notification; negotiation of draft and final facility agreements; and conclusion of facility agreements.* Prior to the development of a facility agreement, BIS shall notify the owner, operator, occupant, or agent in charge of the facility, and if the owner, operator, occupant or agent in charge so requests, the notified person may participate in preparations with BIS representatives for the negotiation of such an agreement. During the initial or routine inspection of a declared facility, the Inspection Team and the Host Team will negotiate a draft facility agreement or amendment to a facility agreement. To the maximum extent practicable consistent with the Convention, the owner and the operator, occupant or agent in charge of the facility may observe facility agreement negotiations between the U.S. Government and OPCW. As a general rule, BIS will consult with the affected facility on the contents of the agreements and take the facility's views into consideration during negotiations. BIS will participate in the negotiation of, and approve, all final facility agreements with the OPCW. Facilities will be notified of and have the right to observe final facility agreement negotiations between the United States and the OPCW to the maximum extent practicable, consistent with the Convention. Prior to the conclusion of a final facility agreement, the affected facility will have an opportunity to comment on the facility agreement. BIS will give consideration to such comments prior to approving final facility agreements with the OPCW. The USNA shall ensure that facility agreements for Schedule 1, Schedule 2, Schedule 3 and UDOC facilities are concluded, as appropriate, with the OPCW in coordination with BIS.

(c) [Reserved]

(d) *Further information.* For further information about facility agreements, please write or call: Treaty Compliance Division, Bureau of Industry and Security, U.S. Department of Commerce, 1555 Wilson Boulevard, Suite 700, Arlington, VA 22209, Telephone: (703) 605–4400.

§ 716.7 Samples.

The owner, operator, occupant or agent in charge of a facility must provide a sample as provided for in the Convention and the Act and consistent with requirements set forth by the Director of the United States National Authority in 22 CFR part 103. Analysis will be restricted to verifying the absence of undeclared scheduled chemicals, unless otherwise agreed after consultation with the facility representative.

§ 716.8 On-site monitoring of Schedule 1 facilities.

Declared Schedule 1 facilities are subject to verification by monitoring with on-site instruments as provided by the Convention. For facilities subject to the CWCR, however, such monitoring is not anticipated. The U.S. Government will ensure that any monitoring that may be requested by the OPCW is carried out pursuant to the Convention and U.S. law.

§ 716.9 Report of inspection-related costs.

Pursuant to section 309(b)(5) of the Act, any facility that has undergone any inspections pursuant to the CWCR during a given calendar year must report to BIS within 90 days of an inspection on its total costs related to that inspection. Although not required, such reports should identify categories of costs separately if possible, such as personnel costs (production-line, administrative, legal), costs of producing records, and costs associated with shutting down chemical production or processing during inspections, if applicable. This information should be reported to BIS on company letterhead at the address given in § 716.6(d) of the CWCR, with the following notation: ''Attn: Report of inspection-related costs.''

§ 716.10 Post-inspection activities.

BIS will forward a copy of the final inspection report to the inspected facility for their review upon receipt from the OPCW. Facilities may submit comments on the final inspection report to BIS, within the time-frame specified by BIS (*i.e.*, at least 7 working days from receipt of the report), and BIS will consider them, to the extent possible, when commenting on the final report. BIS will also send facilities a post-inspection letter detailing the issues that require follow-up action, *e.g.*, amended declaration requirement (see §§ 712.7(d), 713.5(d), 714.4(d), and 715.2(c) of the CWCR), information on the status of the draft facility agreement, if applicable, and the date on which the report on inspection-related costs (see § 716.9 of the CWCR) is due to BIS.

SUPPLEMENT NO. 1 TO PART 716.—NOTIFICATION, DURATION AND FREQUENCY OF INSPECTIONS

	Schedule 1	Schedule 2	Schedule 3	Unscheduled discrete organic chemicals
Notice of initial or routine inspection to USNA.	72 hours prior to arrival of Inspection Team at the point of entry (initial); 24 hours prior to arrival of Inspection Team at the point of entry (routine).	48 hours prior to arrival of Inspection Team at the plant site.	120 hours prior to arrival of Inspection Team at the plant site.	120 hours prior to arrival of Inspection Team at the plant site.
Duration of inspection	As specified in facility agreement.	96 hours	24 hours	24 hours.
Maximum number of inspections.	Determined by OPCW based on characteristics of facility and the nature of the activities carried out at the facility.	2 per calendar year per plant site.	2 per calendar year per plant site.	2 per calendar year per plant site.
Notification of challenge inspection to USNA*.	12 hours prior to arrival of inspection team at the point of entry.			
Duration of Challenge inspection*.	84 hours.			

* See part 717 of the CWCR.

Supplement Nos. 2–3 to Part 716 [Reserved]

PART 717—CWC CLARIFICATION PROCEDURES (CONSULTATIONS AND CHALLENGE INSPECTIONS)

Sec.
717.1 Clarification procedures; challenge inspection requests pursuant to Article IX of the Convention.
717.2 Challenge inspections.
717.3 Samples.
717.4 Report of inspection-related costs.
717.5 Post-inspection activities.

Authority: 22 U.S.C. 6701 *et seq.*, 2681; E.O. 13128, 64 FR 36703, 3 CFR 1999 Comp., p. 199.

§ 717.1 Clarification procedures; challenge inspection requests pursuant to Article IX of the Convention.

(a) Article IX of the Convention sets forth procedures for clarification, between States Parties, of issues about compliance with the Convention. States Parties may attempt to resolve such issues through consultation between themselves or through the Organization for the Prohibition of Chemical Weapons (OPCW). A State Party may also request the OPCW to conduct an on-site challenge inspection of any facility or location in the territory or in any other place under the jurisdiction or control of any other State Party. Such an on-site challenge inspection request shall be for the sole purpose of clarifying and resolving any questions concerning possible non-compliance with the Convention.

(b) In the event that BIS receives a request for clarification, pursuant to Article IX of the Convention, concerning possible non-compliance with the CWC, any person or facility subject to the CWCR (parts 710 through 729 of this subchapter) that receives an official written request from BIS for clarification must, within five working days from receipt of such request, provide BIS with any relevant information required to respond to the OPCW or the State Party(ies) who requested clarification under Article IX. BIS will contact the person or facility subject to the Article IX clarification, as early as practicable, prior to issuing an official written request for clarification to the person or facility.

§ 717.2 Challenge inspections.

Persons or facilities, other than U.S. Government facilities as defined in § 710.2(a) of the CWCR, may be subject to a challenge inspection by the OPCW concerning possible non-compliance with the requirements of the Convention, irrespective of whether or not they are required to submit declarations or reports under the CWCR. BIS will host and escort the international Inspection Team for challenge inspections in the United States of such persons or facilities.

(a) *Consent to challenge inspections; warrants for challenge inspections.* (1) The owner, operator, occupant or agent in charge of a facility may consent to a challenge inspection. The individual giving consent on behalf of the facility represents that he or she has the authority to make this decision for the facility. The facility must respond to the notice of inspection, which includes within it a request for consent to the inspection, within four hours of the facility's receipt of the notice of inspection from BIS.

(2) In instances where the owner, operator, occupant or agent in charge of a facility does not consent to a challenge inspection, BIS will assist the Department of Justice in seeking a criminal warrant as provided by the Act. The existence of a facility agreement does not in any way limit the right of the operator of the facility to withhold consent to a challenge inspection request.

(b) *Notice of challenge inspection.* Challenge inspections may be made only upon issuance of written notice by the United States National Authority (USNA) to the owner and to the operator, occupant or agent in charge of the premises. BIS will provide notice of inspection to the inspection point of contact at such time that a person or facility has been clearly established, if possible, and when notification is deemed appropriate. If the United States is unable to provide actual written notice to the owner and to the operator, occupant or agent in charge, BIS (or another appropriate agency, if BIS is unable) may post notice prominently at the plant, plant site or other facility or location to be inspected.

(1) *Timing.* The OPCW will notify the USNA of a challenge inspection not less than 12 hours before the planned arrival of the Inspection Team at the U.S. point of entry. Written notice will be provided to the owner and to the operator, occupant, or agent in charge of the premises at any appropriate time determined by the USNA after receipt of notification from the OPCW Technical Secretariat.

(2)(i) *Content of notice.* The notice of inspection shall include all appropriate information provided by the OPCW to the United States National Authority concerning:

(A) The type of inspection;

(B) The basis for the selection of the facility or locations for the type of inspection sought;

(C) The time and date that the inspection will begin and the period covered by the inspection;

(D) The names and titles of the Inspection Team members; and

(E) All appropriate evidence or reasons provided by the requesting State Party for seeking the inspection.

(ii) In addition to appropriate information provided by the OPCW in its notification to the USNA, the notice of inspection that BIS delivers to the facility will request the facility to indicate whether it will consent to an inspection and will state whether an advance team is available to assist the site in preparation for the inspection. If an advance team is available, facilities that request advance team assistance are not required to reimburse the U.S. Government for costs associated with these activities. If a facility does not agree to provide consent to an inspection within four hours of receipt of the inspection notification, BIS will assist the Department of Justice in seeking a criminal warrant.

(c) *Period of inspection.* Challenge inspections will not exceed 84 hours, unless extended by agreement between the Inspection Team and the Host Team Leader.

(d) *Scope and conduct of inspections*—(1) *General.* Each inspection shall be limited to the purposes described in this section and conducted in the least intrusive manner, consistent with the effective and timely accomplishment of its purpose as provided in the Convention.

(2) *Scope of inspections.* If an owner, operator, occupant, or agent in charge of a facility consents to a challenge inspection, the inspection will be conducted under the authority of the Act and in accordance with the provisions of Article IX and applicable provisions of the Verification Annex of the Convention. If consent is not granted, the inspection will be conducted pursuant to the terms of a criminal warrant issued under the authority of the Act.

(3) *Hours of inspections.* Consistent with the provisions of the Convention, the Host Team will ensure, to the extent possible, that each inspection is commenced, conducted, and concluded during ordinary working hours, but no inspection shall be prohibited or otherwise disrupted from commencing, continuing or concluding during other hours.

(4) *Health and safety regulations and requirements.* In carrying out their activities, the Inspection Team and Host Team shall observe federal, state, and local health and safety regulations and health and safety requirements established at the inspection site, including those for the protection of controlled environments within a facility and for personal safety.

(5) *Pre-inspection briefing.* Upon arrival of the Inspection Team and the Host Team in the vicinity of the inspection site and before commencement of the inspection, facility representatives will provide the Inspection Team and the Host Team with a pre-inspection briefing concerning the facility, the activities carried out there, safety measures, and administrative and logistical arrangements necessary for the inspection, which may be aided with the use of maps and other documentation as deemed appropriate by the facility. The time spent for the briefing may not exceed three hours.

§ 717.3 Samples.

If requested by the Inspection Team, the owner, operator, occupant or agent in charge of a facility must provide a sample, as provided for in the Convention and the Act and consistent with requirements set forth by the Director of the United States National Authority in 22 CFR part 103. This may be done by providing a sample, taken in the presence of the Inspection Team, to the U.S. Host Team leader, who will then release it to the Inspection Team for analysis. Analysis of the sample may be restricted to verifying the presence or absence of Schedule 1, 2, or 3 chemicals, or appropriate degradation products, unless agreed otherwise.

§ 717.4 Report of inspection-related costs.

Pursuant to section 309(b)(5) of the Act, any facility that has undergone any inspections pursuant to the CWCR during a given calendar year must report to BIS within 90 days of an inspection on its total costs related to that inspection. Although not required, such reports should identify categories of costs separately if possible, such as personnel costs (production-line, administrative, legal), costs of producing records, and costs associated with shutting down chemical production or processing during inspections, if applicable. This information should be reported to BIS on company letterhead at the address given in § 716.6(d) of the CWCR, with the following notation: ''AATTN: Report of Inspection-related Costs.''

§ 717.5 Post-inspection activities.

BIS will forward a copy of the final inspection report to the inspected facility for their review upon receipt from the OPCW. Facilities may submit comments on the final inspection report to BIS, and BIS will consider them, to the extent possible, when commenting on the final report. BIS will also send facilities a post-inspection letter detailing the issues that require follow-up action and the date on which the report on inspection-related costs (see § 717.4 of the CWCR) is due to BIS.

PART 718—CONFIDENTIAL BUSINESS INFORMATION

Sec.
718.1 Definition.
718.2 Identification of confidential business information.
718.3 Disclosure of confidential business information.
Supplement No. 1 to Part 718—Confidential Business Information Declared or Reported

Authority: 22 U.S.C. 6701 *et seq.*; E.O. 13128, 64 FR 36703, 3 CFR 1999 Comp., p. 199.

§ 718.1 Definition.

The Chemical Weapons Convention Implementation Act of 1998 (''the Act'') defines confidential business information as information included in categories specifically identified in sections 103(g)(1) and 304(e)(2) of the Act and other trade secrets as follows:

(a) Financial data;

(b) Sales and marketing data (other than shipment data);

(c) Pricing data;

(d) Personnel data;

(e) Research data;

(f) Patent data;

(g) Data maintained for compliance with environmental or occupational health and safety regulations;

(h) Data on personnel and vehicles entering and personnel and personal passenger vehicles exiting the site;

(i) Any chemical structure;

(j) Any plant design, process, technology or operating method;

(k) Any operating requirement, input, or result that identifies any type or quantity of chemicals used, processed or produced;

(l) Any commercial sale, shipment or use of a chemical; or

(m) Information that qualifies as a trade secret under 5 U.S.C. 552(b)(4) (Freedom of Information Act), provided such trade secret is obtained from a U.S. person or through the U.S. Government.

718.2 Identification of confidential business information.

(a) *General.* Certain confidential business information submitted to BIS

in declarations and reports does not need to be specifically identified and marked by the submitter, as described in paragraph (b) of this section. Other confidential business information submitted to BIS in declarations and reports and confidential business information provided to the Host Team during inspections must be identified by the inspected facility so that the Host Team can arrange appropriate marking and handling.

(b) *Confidential business information contained in declarations and reports.* (1) BIS has identified those data fields on the declaration and report forms that request ''confidential business information'' as defined by the Act. These data fields are identified in the table provided in Supplement No. 1 to this part.

(2) You must specifically identify in a cover letter submitted with your declaration or report any additional information on a declaration or report form (i.e., information not provided in one of the data fields listed in the table included in Supplement No. 1 to this part), including information provided in attachments to Form A or Form B, that you believe is confidential business information, as defined by the Act, and must describe how disclosure would likely result in competitive harm.

Note to § 718.2(b): BIS has also determined that descriptions of Schedule 1 facilities submitted with Initial Declarations as attachments to Form A contain confidential business information, as defined by the Act.

(c) *Confidential business information contained in advance notifications.* Information contained in advance notifications of exports and imports of Schedule 1 chemicals is not subject to the confidential business information provisions of the Act. You must identify information in your advance notifications of Schedule 1 imports that you consider to be privileged and confidential, and describe how disclosure would likely result in competitive harm. See § 718.3(b) of the CWCR for provisions on disclosure to the public of such information by the U.S. Government.

(d) *Confidential business information related to inspections disclosed to, reported to, or otherwise acquired by, the U.S. Government.* (1) During inspections, certain confidential business information, as defined by the Act, may be disclosed to the Host Team. Facilities being inspected are responsible for identifying confidential business information to the Host Team, so that if it is disclosed to the Inspection Team, appropriate marking and handling can be arranged, in accordance with the provisions of the Convention (see § 718.3(c)(1)(ii) of the CWCR). Confidential business information not related to the purpose of an inspection or not necessary for the accomplishment of an inspection, as determined by the Host Team, may be removed from sight, shrouded, or otherwise not disclosed.

(2) Before or after inspections, confidential business information related to an inspection that is contained in any documents or that is reported to, or otherwise acquired by, the U.S. Government, such as facility information for pre-inspection briefings, facility agreements, and inspection reports, must be identified by the facility so that it may be appropriately marked and handled. If the U.S. Government creates derivative documents from such documents or reported information, they will also be marked and handled as confidential business information.

§ 718.3 Disclosure of confidential business information.

(a) *General.* Confidentiality of information will be maintained by BIS consistent with the non-disclosure provisions of the Act, the Export Administration Regulations (15 CFR parts 730 through 799), the International Traffic in Arms Regulations (22 CFR parts 120 through 130), and applicable exemptions under the Freedom of Information Act, as appropriate.

(b) *Disclosure of confidential business information contained in advance notifications.* Information contained in advance notifications of exports and imports of Schedule 1 chemicals is not subject to the confidential business information provisions of the Act. Disclosure of such information will be in accordance with the provisions of the relevant statutory and regulatory authorities as follows:

(1) *Exports of Schedule 1 chemicals.* Confidentiality of all information contained in these advance notifications will be maintained consistent with the non-disclosure provisions of the Export Administration Regulations (15 CFR parts 730 through 799), the International Traffic in Arms Regulations (22 CFR parts 120 through 130), and applicable exemptions under the Freedom of Information Act, as appropriate; and

(2) *Imports of Schedule 1 chemicals.* Confidentiality of information contained in these advance notifications will be maintained pursuant to applicable exemptions under the Freedom of Information Act.

(c) *Disclosure of confidential business information pursuant to § 404(b) of the Act*—(1) *Disclosure to the Organization for the Prohibition of Chemical Weapons (OPCW).* (i) As provided by Section 404(b)(1) of the Act, the U.S. Government will disclose or otherwise provide confidential business information to the Technical Secretariat of the OPCW or to other States Parties to the Convention, in accordance with provisions of the Convention, particularly with the provisions of the Annex on the Protection of Confidential Information (Confidentiality Annex).

(ii) *Convention provisions.* (A) The Convention provides that States Parties may designate information submitted to the Technical Secretariat as confidential, and requires the OPCW to limit access to, and prevent disclosure of, information so designated, except that the OPCW may disclose certain confidential information submitted in declarations to other States Parties if requested. The OPCW has developed a classification system whereby States Parties may designate the information they submit in their declarations as ''restricted,'' ''protected,'' or ''highly protected,'' depending on the sensitivity of the information. Other States Parties are obligated, under the Convention, to store and restrict access to information which they receive from the OPCW in accordance with the level of confidentiality established for that information.

(B) The OPCW Inspection Team members are prohibited, under the terms of their employment contracts and pursuant to the Confidentiality Annex of the Convention, from disclosing to any unauthorized persons, during their employment and for five years after termination of their employment, any confidential information coming to their knowledge or into their possession in the performance of their official duties.

(iii) *U.S. Government designation of information to the Technical Secretariat.* It is the policy of the U.S. Government to designate all facility information it provides to the Technical Secretariat in declarations, reports and Schedule 1 advance notifications as ''protected.'' It is the policy of the U.S. Government to designate confidential business information that it discloses to Inspection Teams during inspections as ''protected'' or ''highly protected,'' depending on the sensitivity of the information. The Technical Secretariat is responsible for storing and limiting access to any confidential business information contained in a document according to its established procedures.

(2) *Disclosure to Congress.* Section 404(b)(2) of the Act provides that the U.S. Government must disclose confidential business information to any committee or subcommittee of Congress with appropriate jurisdiction upon the

written request of the chairman or ranking minority member of such committee or subcommittee. No such committee or subcommittee, and no member and no staff member of such committee or subcommittee, may disclose such information or material except as otherwise required or authorized by law.

(3) *Disclosure to other Federal agencies for law enforcement actions and disclosure in enforcement proceedings under the Act.* Section 404(b)(3) of the Act provides that the U.S. Government must disclose confidential business information to other Federal agencies for enforcement of the Act or any other law, and must disclose such information when relevant in any proceeding under the Act. Disclosure will be made in such manner as to preserve confidentiality to the extent practicable without impairing the proceeding. Section 719.14(b) of the CWCR provides that all hearings will be closed, unless the Administrative Law Judge for good cause shown determines otherwise. Section 719.20 of the CWCR provides that parties may request that the administrative law judge segregate and restrict access to confidential business information contained in material in the record of an enforcement proceeding.

(4) *Disclosure to the public; national interest determination.* Section 404(c) of the Act provides that confidential business information, as defined by the Act, that is in the possession of the U.S. Government, is exempt from public disclosure in response to a Freedom of Information Act request, except when such disclosure is determined to be in the national interest.

(i) *National interest determination.* The United States National Authority (USNA), in coordination with the CWC interagency group, shall determine on a case-by-case basis if disclosure of confidential business information in response to a Freedom of Information Act request is in the national interest.

(ii) *Notification of intent to disclose pursuant to a national interest determination.* The Act provides for notification to the affected person of intent to disclose confidential business information based on the national interest, unless such notification of intent to disclose is contrary to national security or law enforcement needs. If, after coordination with the agencies that constitute the CWC interagency group, the USNA does not determine that such notification of intent to disclose is contrary to national security or law enforcement needs, the USNA will notify the person that submitted the information and the person to whom the information pertains of the intent to disclose the information.

SUPPLEMENT NO. 1 TO PART 718.—CONFIDENTIAL BUSINESS INFORMATION DECLARED OR REPORTED *

	Fields containing confidential business information
Schedule 1 Forms:	
Certification Form ..	NONE.
Form 1–1	NONE.
Form 1–2	All fields.
Form 1–2A	All fields.
Form 1–2B	All fields.
Form 1–3	All fields.
Form 1–4	All fields.
Schedule 2 Forms:	
Certification Form ..	NONE.
Form 2–1	NONE.
Form 2–2	Question 2–2.9
Form 2–3	All fields.
Form 2–3A	All fields.
Form 2–3B	All fields.
Form 2–3C	All fields.
Form 2–4	All fields.
Schedule 3 Forms:	
Certification Form ..	NONE.
Form 3–1	NONE.
Form 3–2	NONE.
Form 3–3	All fields.
Form 3–4	All fields.
Unscheduled Discrete Organic Chemicals Forms:	
Certification Form ..	NONE.
Form UDOC	NONE.
FORMS A and B and attachments (all Schedules and UDOCs).	Case-by-case; must be identified by submitter.

* This table lists those data fields on the Declaration and Report Forms that request ''confidential business information'' (CBI) as defined by the Act (sections 103(g) and 304(e)(2)). As provided by section 404(a) of the Act, CBI is exempt from disclosure in response to a Freedom of Information Act (FOIA) request under sections 552(b)(3) and 552(b)(4) (5 U.S.C.A. 552(b)(3)–(4)), unless a determination is made, pursuant to section 404(c) of the Act, that such disclosure is in the national interest. Other FOIA exemptions to disclosure may also apply. You must identify CBI provided in Form A and/or Form B attachments, and provide the reasons supporting your claim of confidentiality, except that Schedule 1 facility technical descriptions submitted with initial declarations are always considered to include CBI. If you believe that information you are submitting in a data field marked ''none'' in the Table is CBI, as defined by the Act, you must identify the specific information and provide the reasons supporting your claim of confidentiality in a cover letter.

PART 719—ENFORCEMENT

Sec.

719.1 Scope and definitions.
719.2 Violations of the Act subject to administrative and criminal enforcement proceedings.
719.3 Violations of the IEEPA subject to judicial enforcement proceedings.
719.4 Violations and sanctions under the Act not subject to proceedings under the CWCR.
719.5 Initiation of administrative proceedings.
719.6 Request for hearing and answer.
719.7 Representation.
719.8 Filing and service of papers other than the NOVA.
719.9 Summary decision.
719.10 Discovery.
719.11 Subpoenas.
719.12 Matters protected against disclosure.
719.13 Prehearing conference.
719.14 Hearings.
719.15 Procedural stipulations.
719.16 Extension of time.
719.17 Post-hearing submissions.
719.18 Decisions.
719.19 Settlement.
719.20 Record for decision.
719.21 Payment of final assessment.
719.22 Reporting a violation.

Authority: 22 U.S.C. 6701 *et seq.*; 50 U.S.C. 1601 *et seq.*; 50 U.S.C. 1701 *et seq.*; E.O. 12938, 59 FR 59099, 3 CFR 1994, Comp., p. 950; E.O. 13128, 64 FR 36703, 3 CFR 1999 Comp., p. 199.

§ 719.1 Scope and definitions.

(a) *Scope.* This part 719 describes the various sanctions that apply to violations of the Act and the CWCR. It also establishes detailed administrative procedures for certain violations of the Act. The three categories of violations are as follows:

(1) *Violations of the Act subject to administrative and criminal enforcement proceedings.* Section 719.2 of the CWCR sets forth violations for which the statutory basis is the Act. BIS investigates these violations and, for administrative proceedings, prepares charges, provides legal representation to the U.S. Government, negotiates settlements, and makes recommendations to officials of the Department of State with respect to the initiation and resolution of proceedings. The administrative procedures applicable to these violations are found in §§ 719.5 through 719.22 of the CWCR. The Department of State gives notice of initiation of administrative proceedings and issues orders imposing penalties pursuant to 22 CFR part 103, subpart C.

(2) *Violations of the International Emergency Economic Powers Act (IEEPA) subject to judicial enforcement proceedings.* Section 719.3 of the CWCR sets forth violations of the Chemical Weapons Convention for which the statutory basis is the IEEPA. BIS refers these violations to the Department of Justice for civil or criminal judicial enforcement.

(3) *Violations and sanctions under the Act not subject to proceedings under the CWCR.* Section 719.4 of the CWCR sets forth violations and sanctions under the

Act that are not violations of the CWCR and that are not subject to proceedings under the CWCR. This section is included solely for informational purposes. BIS may assist in investigations of these violations, but has no authority to initiate any enforcement action under the CWCR.

Note to § 719.1(a): This part 719 does not apply to violations of the export requirements imposed pursuant to the Chemical Weapons Convention and set forth in the Export Administration Regulations (EAR) (15 CFR parts 730 through 799) and in the International Traffic in Arms Regulations (ITAR) (22 CFR parts 120 through 130).

(b) *Definitions.* The following are definitions of terms as used only in parts 719 and 720 of the CWCR. For definitions of terms applicable to parts 710 through 718 and parts 721 and 722 of the CWCR, *see* part 710 of the CWCR.

Act (The). The Chemical Weapons Convention Implementation Act of 1998 (22 U.S.C. 6701–6777).

Assistant Secretary for Export Enforcement. The Assistant Secretary for Export Enforcement, Bureau of Industry and Security, United States Department of Commerce.

Final decision. A decision or order assessing a civil penalty, or otherwise disposing of or dismissing a case, which is not subject to further administrative review, but which may be subject to collection proceedings or judicial review in an appropriate Federal court as authorized by law.

IEEPA. The International Emergency Economic Powers Act, as amended (50 U.S.C. 1701–1706).

Office of Chief Counsel. The Office of Chief Counsel for Industry and Security, United States Department of Commerce.

Report. For purposes of parts 719 and 720 of the CWCR, the term ''report'' means any declaration, report, or advance notification required under parts 712 through 715 of the CWCR.

Respondent. Any person named as the subject of a letter of intent to charge, or a Notice of Violation and Assessment (NOVA) and proposed order.

Under Secretary, Bureau of Industry and Security. The Under Secretary, Bureau of Industry and Security, United States Department of Commerce.

§ 719.2 Violations of the Act subject to administrative and criminal enforcement proceedings.

(a) *Violations.*—(1) *Refusal to permit entry or inspection.* No person may willfully fail or refuse to permit entry or inspection, or disrupt, delay or otherwise impede an inspection, authorized by the Act.

(2) *Failure to establish or maintain records.* No person may willfully fail or refuse:

(i) To establish or maintain any record required by the Act or the CWCR; or

(ii) To submit any report, notice, or other information to the United States Government in accordance with the Act or the CWCR; or

(iii) To permit access to or copying of any record required to be established or maintained by the Act or the CWCR, including any record that is exempt from disclosure under the Act or the CWCR.

(b) *Civil penalties.*—(1) *Civil penalty for refusal to permit entry or inspection.* Any person that is determined to have willfully failed or refused to permit entry or inspection, or to have disrupted, delayed or otherwise impeded an authorized inspection, as set forth in paragraph (a)(1) of this section, shall pay a civil penalty in an amount not to exceed $25,000 for each violation. Each day the violation continues constitutes a separate violation.

(2) *Civil penalty for failure to establish or maintain records.* Any person that is determined to have willfully failed or refused to establish or maintain any record or submit any report, notice, or other information required by the Act or the CWCR, or to have willfully failed or refused to permit access to or copying of any record, including any record exempt from disclosure under the Act or the CWCR as set forth in paragraph (a)(2) of this section, shall pay a civil penalty in an amount not to exceed $5,000 for each violation.

(c) *Criminal penalty.* Any person that knowingly violates the Act by willfully failing or refusing to permit entry or inspection authorized by the Act; or by willfully disrupting, delaying or otherwise impeding an inspection authorized by the Act; or by willfully failing or refusing to establish or maintain any required record, or to submit any required report, notice, or other information; or by willfully failing or refusing to permit access to or copying of any record, including records exempt from disclosure under the Act or the CWCR, shall, in addition to or in lieu of any civil penalty that may be imposed, be fined under Title 18 of the United States Code, be imprisoned for not more than one year, or both.

(d) *Denial of export privileges.* Any person in the United States or any U.S. national may be subject to a denial of export privileges after notice and opportunity for hearing pursuant to part 720 of the CWCR if that person has been convicted under Title 18, section 229 of the United States Code.

§ 719.3 Violations of the IEEPA subject to judicial enforcement proceedings.

(a) *Violations.*—(1) *Import restrictions involving Schedule 1 chemicals.* Except as otherwise provided in § 712.2 of the CWCR, no person may import any Schedule 1 chemical (See Supplement No. 1 to part 712 of the CWCR) unless:

(i) The import is from a State Party;

(ii) The import is for research, medical, pharmaceutical, or protective purposes;

(iii) The import is in types and quantities strictly limited to those that can be justified for such purposes; and

(iv) The importing person has notified BIS not less than 45 calendar days before the import pursuant to § 712.6 of the CWCR.

(2) *Import restrictions involving Schedule 2 chemicals.* Except as otherwise provided in § 713.1 of the CWCR, no person may, on or after April 29, 2000, import any Schedule 2 chemical (see Supplement No. 1 to part 713 of the CWCR) from any destination other than a State Party.

(b) *Civil penalty.* A civil penalty not to exceed $11,000 may be imposed in accordance with this part on any person for each violation of this section.[1]

(c) *Criminal penalty.* Whoever willfully violates paragraph (a)(1) or (2) of this section shall, upon conviction, be fined not more than $50,000, or, if a natural person, imprisoned for not more than ten years, or both; and any officer, director, or agent of any corporation who knowingly participates in such violation may be punished by like fine, imprisonment, or both.[2]

§ 719.4 Violations and sanctions under the Act not subject to proceedings under the CWCR.

(a) *Criminal penalties for development or use of a chemical weapon.* Any person who violates 18 U.S.C. 229 shall be fined, or imprisoned for any term of years, or both. Any person who violates 18 U.S.C. 229 and by whose action the death of another person is the result shall be punished by death or imprisoned for life.

(b) *Civil penalty for development or use of a chemical weapon.* The Attorney

[1] The maximum civil penalty allowed under the International Emergency Economic Powers Act is $11,000 for any violation committed on or after October 23, 1996 (15 CFR 6.4(a)(3)).

[2] Alternatively, sanctions may be imposed under 18 U.S.C. 3571, a criminal code provision that establishes a maximum criminal fine for a felony that is the greatest of: (1) The amount provided by the statute that was violated; (2) an amount not more than $250,000 for an individual, or not more than $500,000 for an organization; or (3) an amount based on gain or loss from the offense.

General may bring a civil action in the appropriate United States district court against any person who violates 18 U.S.C. 229 and, upon proof of such violation by a preponderance of the evidence, such person shall be subject to pay a civil penalty in an amount not to exceed $100,000 for each such violation.

(c) *Criminal forfeiture.* (1) Any person convicted under section 229A(a) of Title 18 of the United States Code shall forfeit to the United States irrespective of any provision of State law:

(i) Any property, real or personal, owned, possessed, or used by a person involved in the offense;

(ii) Any property constituting, or derived from, and proceeds the person obtained, directly or indirectly, as the result of such violation; and

(iii) Any of the property used in any manner or part, to commit, or to facilitate the commission of, such violation.

(2) In lieu of a fine otherwise authorized by section 229A(a) of Title 18 of the United States Code, a defendant who derived profits or other proceeds from an offense may be fined not more than twice the gross profits or other proceeds.

(d) *Injunction.* (1) The United States may, in a civil action, obtain an injunction against:

(i) The conduct prohibited under section 229 or 229C of Title 18 of the United States Code; or

(ii) The preparation or solicitation to engage in conduct prohibited under section 229 or 229D of Title 18 of the United States Code.

(2) In addition, the United States may, in a civil action, restrain any violation of section 306 or 405 of the Act, or compel the taking of any action required by or under the Act or the Convention.

§ 719.5 Initiation of administrative proceedings.

(a) *Letter of intent to charge.* The Director of the Office of Export Enforcement, Bureau of Industry and Security, may notify a respondent by letter of the intent to charge. This letter of intent to charge will advise a respondent that BIS has conducted an investigation and intends to recommend that the Secretary of State issue a Notice of Violation and Assessment (NOVA). The letter of intent to charge will be accompanied by a draft NOVA and proposed order, and will give the respondent a specified period of time to contact BIS to discuss settlement of the allegations set forth in the draft NOVA. An administrative enforcement proceeding is not initiated by a letter of intent to charge. If the respondent does not contact BIS within the specified time, or if the respondent requests it, BIS will make its request for initiation of an administrative enforcement proceeding to the Secretary of State in accordance with paragraph (b) of this section.

(b) *Request for Notice of Violation and Assessment (NOVA).* The Director of the Office of Export Enforcement, Bureau of Industry and Security, may request that the Secretary of State initiate an administrative enforcement proceeding under this § 719.5 and 22 CFR 103.7. If the request is in accordance with applicable law, the Secretary of State will initiate an administrative enforcement proceeding by issuing a NOVA. The Office of Chief Counsel shall serve the NOVA as directed by the Secretary of State.

(c) *Content of NOVA.* The NOVA shall constitute a formal complaint, and will set forth the basis for the issuance of the proposed order. It will set forth the alleged violation(s) and the essential facts with respect to the alleged violation(s), reference the relevant statutory, regulatory or other provisions, and state the amount of the civil penalty to be assessed. The NOVA will inform the respondent of the right to request a hearing pursuant to § 719.6 of the CWCR, inform the respondent that failure to request such a hearing shall result in the proposed order becoming final and unappealable on signature of the Secretary of State, and provide payment instructions. A copy of the regulations that govern the administrative proceedings will accompany the NOVA.

(d) *Proposed order.* A proposed order shall accompany every NOVA, letter of intent to charge, and draft NOVA. It will briefly set forth the substance of the alleged violation(s) and the statutory, regulatory or other provisions violated. It will state the amount of the civil penalty to be assessed.

(e) *Notice.* Notice of the intent to charge or of the initiation of formal proceedings shall be given to the respondent (or respondent's agent for service of process, or attorney) by sending relevant documents, via first class mail, facsimile, or by personal delivery.

§ 719.6 Request for hearing and answer.

(a) *Time to answer.* If the respondent wishes to contest the NOVA and proposed order issued by the Secretary of State, the respondent must request a hearing in writing within 15 business days from the postmarked date of the NOVA. If the respondent requests a hearing, the respondent must answer the NOVA within 30 days from the date of the request for hearing. The request for hearing and answer must be filed with the Administrative Law Judge (ALJ), along with a copy of the NOVA and proposed order, and served on the Office of Chief Counsel, and any other address(es) specified in the NOVA, in accordance with § 719.8 of the CWCR.

(b) *Content of answer.* The respondent's answer must be responsive to the NOVA and proposed order, and must fully set forth the nature of the respondent's defense(s). The answer must specifically admit or deny each separate allegation in the NOVA; if the respondent is without knowledge, the answer will so state and will operate as a denial. Failure to deny or controvert a particular allegation will be deemed an admission of that allegation. The answer must also set forth any additional or new matter the respondent contends supports a defense or claim of mitigation. Any defense or partial defense not specifically set forth in the answer shall be deemed waived, and evidence thereon may be refused, except for good cause shown.

(c) *English required.* The request for hearing, answer, and all other papers and documentary evidence must be submitted in English.

(d) *Waiver.* The failure of the respondent to file a request for a hearing and an answer within the times provided constitutes a waiver of the respondent's right to appear and contest the allegations set forth in the NOVA and proposed order. If no hearing is requested and no answer is provided, the proposed order will be signed and become final and unappealable.

§ 719.7 Representation.

A respondent individual may appear and participate in person, a corporation by a duly authorized officer or employee, and a partnership by a partner. If a respondent is represented by counsel, counsel shall be a member in good standing of the bar of any State, Commonwealth or Territory of the United States, or of the District of Columbia, or be licensed to practice law in the country in which counsel resides, if not the United States. The U.S. Government will be represented by the Office of Chief Counsel. A respondent personally, or through counsel or other representative who has the power of attorney to represent the respondent, shall file a notice of appearance with the ALJ, or, in cases where settlement negotiations occur before any filing with the ALJ, with the Office of Chief Counsel.

§ 719.8 Filing and service of papers other than the NOVA.

(a) *Filing.* All papers to be filed with the ALJ shall be addressed to ''CWC Administrative Enforcement Proceedings'' at the address set forth in the NOVA, or such other place as the ALJ may designate. Filing by United States mail (first class postage prepaid), by express or equivalent parcel delivery service, via facsimile, or by hand delivery, is acceptable. Filing from a foreign country shall be by airmail or via facsimile. A copy of each paper filed shall be simultaneously served on all parties.

(b) *Service.* Service shall be made by United States mail (first class postage prepaid), by express or equivalent parcel delivery service, via facsimile, or by hand delivery of one copy of each paper to each party in the proceeding. The Department of State is a party to cases under the CWCR, but will be represented by the Office of Chief Counsel. Therefore, service on the government party in all proceedings shall be addressed to Office of Chief Counsel for Industry and Security, U.S. Department of Commerce, 14th Street and Constitution Avenue, NW., Room H–3839, Washington, DC 20230, or sent via facsimile to (202) 482–0085. Service on a respondent shall be to the address to which the NOVA and proposed order was sent, or to such other address as the respondent may provide. When a party has appeared by counsel or other representative, service on counsel or other representative shall constitute service on that party.

(c) *Date.* The date of filing or service is the day when the papers are deposited in the mail or are delivered in person, by delivery service, or by facsimile. Refusal by the person to be served, or by the person's agent or attorney, of service of a document or other paper will be considered effective service of the document or other paper as of the date of such refusal.

(d) *Certificate of service.* A certificate of service signed by the party making service, stating the date and manner of service, shall accompany every paper, other than the NOVA and proposed order, filed and served on the parties.

(e) *Computation of time.* In computing any period of time prescribed or allowed by this part, the day of the act, event, or default from which the designated period of time begins to run is not to be included. The last day of the period so computed is to be included unless it is a Saturday, a Sunday, or a legal holiday (as defined in Rule 6(a) of the Federal Rules of Civil Procedure), in which case the period runs until the end of the next day which is neither a Saturday, a Sunday, nor a legal holiday. Intermediate Saturdays, Sundays, and legal holidays are excluded from the computation when the period of time prescribed or allowed is 7 days or less.

§ 719.9 Summary decision.

The ALJ may render a summary decision disposing of all or part of a proceeding on the motion of any party to the proceeding, provided that there is no genuine issue as to any material fact and the party is entitled to summary decision as a matter of law.

§ 719.10 Discovery.

(a) *General.* The parties are encouraged to engage in voluntary discovery regarding any matter, not privileged, which is relevant to the subject matter of the pending proceeding. The provisions of the Federal Rules of Civil Procedure relating to discovery apply to the extent consistent with this part and except as otherwise provided by the ALJ or by waiver or agreement of the parties. The ALJ may make any order which justice requires to protect a party or person from annoyance, embarrassment, oppression, or undue burden or expense. These orders may include limitations on the scope, method, time and place of discovery, and provisions for protecting the confidentiality of classified or otherwise sensitive information, including Confidential Business Information (CBI) as defined by the Act.

(b) *Interrogatories and requests for admission or production of documents.* A party may serve on any party interrogatories, requests for admission, or requests for production of documents for inspection and copying, and a party concerned may apply to the ALJ for such enforcement or protective order as that party deems warranted with respect to such discovery. The service of a discovery request shall be made at least 20 days before the scheduled date of the hearing unless the ALJ specifies a shorter time period. Copies of interrogatories, requests for admission and requests for production of documents and responses thereto shall be served on all parties and a copy of the certificate of service shall be filed with the ALJ. Matters of fact or law of which admission is requested shall be deemed admitted unless, within a period designated in the request (at least 10 days after service, or within such additional time as the ALJ may allow), the party to whom the request is directed serves upon the requesting party a sworn statement either denying specifically the matters of which admission is requested or setting forth in detail the reasons why the party to whom the request is directed cannot truthfully either admit or deny such matters.

(c) *Depositions.* Upon application of a party and for good cause shown, the ALJ may order the taking of the testimony of any person by deposition and the production of specified documents or materials by the person at the deposition. The application shall state the purpose of the deposition and set forth the facts sought to be established through the deposition.

(d) *Enforcement.* The ALJ may order a party to answer designated questions, to produce specified documents or things or to take any other action in response to a proper discovery request. If a party does not comply with such an order, the ALJ may make a determination or enter any order in the proceeding as the ALJ deems reasonable and appropriate. The ALJ may strike related charges or defenses in whole or in part or may take particular facts relating to the discovery request to which the party failed or refused to respond as being established for purposes of the proceeding in accordance with the contentions of the party seeking discovery. In addition, enforcement by any district court of the United States in which venue is proper may be sought as appropriate.

§ 719.11 Subpoenas.

(a) *Issuance.* Upon the application of any party, supported by a satisfactory showing that there is substantial reason to believe that the evidence would not otherwise be available, the ALJ may issue subpoenas to any person requiring the attendance and testimony of witnesses and the production of such books, records or other documentary or physical evidence for the purpose of the hearing, as the ALJ deems relevant and material to the proceedings, and reasonable in scope. Witnesses shall be paid the same fees and mileage that are paid to witnesses in the courts of the United States. In case of contempt, challenge or refusal to obey a subpoena served upon any person pursuant to this paragraph, any district court of the United States, in which venue is proper, has jurisdiction to issue an order requiring any such person to comply with such subpoena. Any failure to obey such order of the court is punishable by the court as a contempt thereof.

(b) *Service.* Subpoenas issued by the ALJ may be served by any of the methods set forth in § 719.8(b) of the CWCR.

(c) *Timing.* Applications for subpoenas must be submitted at least 10 days before the scheduled hearing or

deposition, unless the ALJ determines, for good cause shown, that extraordinary circumstances warrant a shorter time.

§ 719.12 Matters protected against disclosure.

(a) *Protective measures.* The ALJ may limit discovery or introduction of evidence or issue such protective or other orders as in the ALJ's judgment may be needed to prevent undue disclosure of classified or sensitive documents or information, including Confidential Business Information as defined by the Act. Where the ALJ determines that documents containing classified or sensitive matter must be made available to a party in order to avoid prejudice, the ALJ may direct the other party to prepare an unclassified and nonsensitive summary or extract of the documents. The ALJ may compare the extract or summary with the original to ensure that it is supported by the source document and that it omits only so much as must remain undisclosed. The summary or extract may be admitted as evidence in the record.

(b) *Arrangements for access.* If the ALJ determines that the summary procedure outlined in paragraph (a) of this section is unsatisfactory, and that classified or otherwise sensitive matter must form part of the record in order to avoid prejudice to a party, the ALJ may provide the parties opportunity to make arrangements that permit a party or a representative to have access to such matter without compromising sensitive information. Such arrangements may include obtaining security clearances or giving counsel for a party access to sensitive information and documents subject to assurances against further disclosure, including a protective order, if necessary.

§ 719.13 Prehearing conference.

(a) On the ALJ's own motion, or on request of a party, the ALJ may direct the parties to participate in a prehearing conference, either in person or by telephone, to consider:

(1) Simplification of issues;

(2) The necessity or desirability of amendments to pleadings;

(3) Obtaining stipulations of fact and of documents to avoid unnecessary proof; or

(4) Such other matters as may expedite the disposition of the proceedings.

(b) The ALJ may order the conference proceedings to be recorded electronically or taken by a reporter, transcribed and filed with the ALJ.

(c) If a prehearing conference is impracticable, the ALJ may direct the parties to correspond with the ALJ to achieve the purposes of such a conference.

(d) The ALJ will prepare a summary of any actions agreed on or taken pursuant to this section. The summary will include any written stipulations or agreements made by the parties.

§ 719.14 Hearings.

(a) *Scheduling.* Upon receipt of a written and dated request for a hearing, the ALJ shall, by agreement with all the parties or upon notice to all parties of at least 30 days, schedule a hearing. All hearings will be held in Washington, DC, unless the ALJ determines, for good cause shown, that another location would better serve the interest of justice.

(b) *Hearing procedure.* Hearings will be conducted in a fair and impartial manner by the ALJ. All hearings will be closed, unless the ALJ for good cause shown determines otherwise. The rules of evidence prevailing in courts of law do not apply, and all evidentiary material deemed by the ALJ to be relevant and material to the proceeding and not unduly repetitious will be received and given appropriate weight, except that any evidence of settlement which would be excluded under Rule 408 of the Federal Rules of Evidence is not admissible. Witnesses will testify under oath or affirmation, and shall be subject to cross-examination.

(c) *Testimony and record.* (1) A verbatim record of the hearing and of any other oral proceedings will be taken by reporter or by electronic recording, and filed with the ALJ. If any party wishes to obtain a written copy of the transcript, that party shall pay the costs of transcription. The parties may share the costs if both wish a transcript.

(2) Upon such terms as the ALJ deems just, the ALJ may direct that the testimony of any person be taken by deposition and may admit an affidavit or declaration as evidence, provided that any affidavits or declarations have been filed and served on the parties sufficiently in advance of the hearing to permit a party to file and serve an objection thereto on the grounds that it is necessary that the affiant or declarant testify at the hearing and be subject to cross-examination.

(d) *Failure to appear.* If a party fails to appear in person or by counsel at a scheduled hearing, the hearing may nevertheless proceed. The party's failure to appear will not affect the validity of the hearing or any proceeding or action taken thereafter.

§ 719.15 Procedural stipulations.

Unless otherwise ordered and subject to § 719.16 of the CWCR, a written stipulation agreed to by all parties and filed with the ALJ will modify the procedures established by this part.

§ 719.16 Extension of time.

The parties may extend any applicable time limitation by stipulation filed with the ALJ before the time limitation expires, or the ALJ may, on the ALJ's own initiative or upon application by any party, either before or after the expiration of any applicable time limitation, extend the time , except that the requirement that a hearing be demanded within 15 days, and the requirement that a final agency decision be made within 30 days, may not be modified.

§ 719.17 Post-hearing submissions.

All parties shall have the opportunity to file post-hearing submissions that may include findings of fact and conclusions of law, supporting evidence and legal arguments, exceptions to the ALJ's rulings or to the admissibility of evidence, and proposed orders and settlements.

§ 719.18 Decisions.

(a) *Initial decision.* After considering the entire record in the case, the ALJ will issue an initial decision based on a preponderance of the evidence. The decision will include findings of fact, conclusions of law, and a decision based thereon as to whether the respondent has violated the Act. If the ALJ finds that the evidence of record is insufficient to sustain a finding that a violation has occurred with respect to one or more allegations, the ALJ shall order dismissal of the allegation(s) in whole or in part, as appropriate. If the ALJ finds that one or more violations have been committed, the ALJ shall issue an order imposing administrative sanctions.

(b) *Factors considered in assessing penalties.* In determining the amount of a civil penalty, the ALJ shall take into account the nature, circumstances, extent and gravity of the violation(s), and, with respect to the respondent, the respondent's ability to pay the penalty, the effect of a civil penalty on the respondent's ability to continue to do business, the respondent's history of prior violations, the respondent's degree of culpability, the existence of an internal compliance program, and such other matters as justice may require.

(c) *Certification of initial decision.* The ALJ shall immediately certify the initial decision and order to the Executive Director of the Office of Legal Adviser, U.S. Department of State, 2201 C Street, NW., Room 5519, Washington, DC 20520, to the Office of Chief Counsel

at the address in § 719.8, and to the respondent, by personal delivery or overnight mail.

(d) *Review of initial decision.* The initial decision shall become the final agency decision and order unless, within 30 days, the Secretary of State modifies or vacates it, with or without conditions, in accordance with 22 CFR 103.8.

§ 719.19 Settlement.

(a) *Settlements before issuance of a NOVA.* When the parties have agreed to a settlement of the case, the Director of the Office of Export Enforcement will recommend the settlement to the Secretary of State, forwarding a proposed settlement agreement and order, which, in accordance with 22 CFR 103.9(a), the Secretary of State will approve and sign if the recommended settlement is in accordance with applicable law.

(b) *Settlements following issuance of a NOVA.* The parties may enter into settlement negotiations at any time during the time a case is pending before the ALJ. If necessary, the parties may extend applicable time limitations or otherwise request that the ALJ stay the proceedings while settlement negotiations continue. When the parties have agreed to a settlement of the case, the Office of Chief Counsel will recommend the settlement to the Secretary of State, forwarding a proposed settlement agreement and order, which, in accordance with 22 CFR 103.9(b), the Secretary will approve and sign if the recommended settlement is in accordance with applicable law.

(c) *Settlement scope.* Any respondent who agrees to an order imposing any administrative sanction does so solely for the purpose of resolving the claims in the administrative enforcement proceeding brought under this part. This reflects the fact that the government officials involved have neither the authority nor the responsibility for initiating, conducting, settling, or otherwise disposing of criminal proceedings. That authority and responsibility are vested in the Attorney General and the Department of Justice.

(d) *Finality.* Cases that are settled may not be reopened or appealed.

§ 719.20 Record for decision.

(a) *The record.* The transcript of hearings, exhibits, rulings, orders, all papers and requests filed in the proceedings, and, for purposes of any appeal under § 719.18 or under 22 CFR 103.8, the decision of the ALJ and such submissions as are provided for under § 719.18 or 22 CFR 103.8 will constitute the record and the exclusive basis for decision. When a case is settled, the record will consist of any and all of the foregoing, as well as the NOVA or draft NOVA, settlement agreement, and order.

(b) *Restricted access.* On the ALJ's own motion, or on the motion of any party, the ALJ may direct that there be a restricted access portion of the record for any material in the record to which public access is restricted by law or by the terms of a protective order entered in the proceedings. A party seeking to restrict access to any portion of the record is responsible, prior to the close of the proceeding, for submitting a version of the document(s) proposed for public availability that reflects the requested deletion. The restricted access portion of the record will be placed in a separate file and the file will be clearly marked to avoid improper disclosure and to identify it as a portion of the official record in the proceedings. The ALJ may act at any time to permit material that becomes declassified or unrestricted through passage of time to be transferred to the unrestricted access portion of the record.

(c) *Availability of documents.—(1) Scope.* All NOVAs and draft NOVAs, answers, settlement agreements, decisions and orders disposing of a case will be displayed on the BIS Freedom of Information Act (FOIA) Web site, at *http://www.bis.doc.gov/foia,* which is maintained by the Office of Administration, Bureau of Industry and Security, U.S. Department of Commerce. This office does not maintain a separate inspection facility. The complete record for decision, as defined in paragraphs (a) and (b) of this section will be made available on request.

(2) *Timing.* The record for decision will be available only after the final administrative disposition of a case. Parties may seek to restrict access to any portion of the record under paragraph (b) of this section.

§ 719.21 Payment of final assessment.

(a) *Time for payment.* Full payment of the civil penalty must be made within 30 days of the effective date of the order or within such longer period of time as may be specified in the order. Payment shall be made in the manner specified in the NOVA.

(b) *Enforcement of order.* The government party may, through the Attorney General, file suit in an appropriate district court if necessary to enforce compliance with a final order issued under the CWCR. This suit will include a claim for interest at current prevailing rates from the date payment was due or ordered.

(c) *Offsets.* The amount of any civil penalty imposed by a final order may be deducted from any sum(s) owed by the United States to a respondent.

§ 719.22 Reporting a violation.

If a person learns that a violation of the Convention, the Act, or the CWCR has occurred or may occur, that person may notify: Office of Export Enforcement, Bureau of Industry and Security, U.S. Department of Commerce, 14th Street and Constitution Avenue, NW., Room H–4520, Washington, DC 20230; Tel: (202) 482–1208; Facsimile: (202) 482–0964.

PART 720—DENIAL OF EXPORT PRIVILEGES

Sec.

720.1 Denial of export privileges for convictions under 18 U.S.C. 229.
720.2 Initiation of administrative action denying export privileges.
720.3 Final decision on administrative action denying export privileges.
720.4 Effect of denial.

Authority: 22 U.S.C. 6701 *et seq.*; E.O. 13128, 64 FR 36703, 3 CFR 1999 Comp., p. 199.

§ 720.1 Denial of export privileges for convictions under 18 U.S.C. 229.

Any person in the United States or any U.S. national may be denied export privileges after notice and opportunity for hearing if that person has been convicted under Title 18, Section 229 of the United States Code of knowingly:

(a) Developing, producing, otherwise acquiring, transferring directly or indirectly, receiving, stockpiling, retaining, owning, possessing, or using, or threatening to use, a chemical weapon; or

(b) Assisting or inducing, in any way, any person to violate paragraph (a) of this section, or attempting or conspiring to violate paragraph (a) of this section.

§ 720.2 Initiation of administrative action denying export privileges.

(a) *Notice.* BIS will notify any person convicted under Section 229, Title 18, United States Code, of BIS's intent to deny that person's export privileges. The notification letter shall reference the person's conviction, specify the number of years for which BIS intends to deny export privileges, set forth the statutory and regulatory authority for the action, state whether the denial order will be standard or non-standard pursuant to Supplement No. 1 to part 764 of the Export Administration Regulations (15 CFR parts 730 through 799), and provide that the person may request a hearing before the Administrative Law Judge within 30 days from the date of the notification letter.

(b) *Waiver.* The failure of the notified person to file a request for a hearing within the time provided constitutes a waiver of the person's right to contest the denial of export privileges that BIS intends to impose.

(c) *Order of Assistant Secretary.* If no hearing is requested, the Assistant Secretary for Export Enforcement will order that export privileges be denied as indicated in the notification letter.

§ 720.3 Final decision on administrative action denying export privileges.

(a) *Hearing.* Any hearing that is granted by the ALJ shall be conducted in accordance with the procedures set forth in § 719.14 of the CWCR.

(b) *Initial decision and order.* After considering the entire record in the proceeding, the ALJ will issue an initial decision and order, based on a preponderance of the evidence. The ALJ may consider factors such as the seriousness of the criminal offense that is the basis for conviction, the nature and duration of the criminal sanctions imposed, and whether the person has undertaken any corrective measures. The ALJ may dismiss the proceeding if the evidence is insufficient to sustain a denial of export privileges, or may issue an order imposing a denial of export privileges for the length of time the ALJ deems appropriate. An order denying export privileges may be standard or non-standard, as provided in Supplement No. 1 to part 764 of the Export Administration Regulations (15 CFR parts 730 through 799). The initial decision and order will be served on each party, and will be published in the **Federal Register** as the final decision of BIS 30 days after service, unless an appeal is filed in accordance with paragraph (c) of this section.

(c) *Grounds for appeal.* (1) A party may, within 30 days of the ALJ's initial decision and order, petition the Under Secretary, Bureau of Industry and Security, for review of the initial decision and order. A petition for review must be filed with the Office of Under Secretary, Bureau of Industry and Security, Department of Commerce, 14th Street and Constitution Avenue, NW., Washington, DC 20230, and shall be served on the Office of Chief Counsel for Industry and Security or on the respondent. Petitions for review may be filed only on one or more of the following grounds:

(i) That a necessary finding of fact is omitted, erroneous or unsupported by substantial evidence of record;

(ii) That a necessary legal conclusion or finding is contrary to law;

(iii) That prejudicial procedural error occurred; or

(iv) That the decision or the extent of sanctions is arbitrary, capricious or an abuse of discretion.

(2) The appeal must specify the grounds on which the appeal is based and the provisions of the order from which the appeal was taken.

(d) *Appeal procedure.* The Under Secretary, Bureau of Industry and Security, normally will not hold hearings or entertain oral arguments on appeals. A full written statement in support of the appeal must be filed with the appeal and be simultaneously served on all parties, who shall have 30 days from service to file a reply. At his/her discretion, the Under Secretary may accept new submissions, but will not ordinarily accept those submissions filed more than 30 days after the filing of the reply to the appellant's first submission.

(e) *Decisions.* The Under Secretary's decision will be in writing and will be accompanied by an order signed by the Under Secretary, Bureau of Industry and Security, giving effect to the decision. The order may either dispose of the case by affirming, modifying or reversing the order of the ALJ, or may refer the case back to the ALJ for further proceedings. Any order that imposes a denial of export privileges will be published in the **Federal Register**.

§ 720.4 Effect of denial.

Any person denied export privileges pursuant to this part shall be considered a ''person denied export privileges'' for purposes of the Export Administration Regulations (EAR) (15 CFR parts 730 through 799). Orders denying export privileges pursuant to Parts 764 and 766 of the EAR are published in the **Federal Register** when they are issued and are legally controlling documents in accordance with their terms. BIS maintains unofficial compilations of persons denied export privileges on its Web site.

PART 721—INSPECTION OF RECORDS AND RECORDKEEPING

Sec.
721.1 Inspection of records.
721.2 Recordkeeping.
721.3 Destruction or disposal of records.

Authority: 22 U.S.C. 6701 *et seq.*; E.O. 13128, 64 FR 36703, 3 CFR 1999 Comp., p. 199.

§ 721.1 Inspection of records.

Upon request by BIS or any other agency of competent jurisdiction, you must permit access to and copying of any record relating to compliance with the requirements of the CWCR. This requires that you make available the equipment and, if necessary, knowledgeable personnel for locating, reading, and reproducing any record.

§ 721.2 Recordkeeping.

(a) *Requirements.* Each person, facility, plant site or trading company required to submit a declaration, report, or advance notification under parts 712 through 715 of the CWCR must retain all supporting materials and documentation used by a unit, plant, facility, plant site or trading company to prepare such declaration, report, or advance notification to determine production processing, consumption, export or import of chemicals. In the event that a declared facility is sold, the previous owner of the facility must retain all such supporting materials and documentation that were not transferred to the current owner of the facility (e.g., as part of the contract involving the sale of the facility)—otherwise, the current owner of the facility is responsible for retaining such supporting materials and documentation. Whenever the previous owner of a declared facility retains such supporting materials and documentation, the owner must inform BIS of any subsequent change in address or other contact information, so that BIS will be able to contact the previous owner of the facility, to arrange for access to such records, if BIS deems them relevant to inspection activities involving the facility (see § 716.4 of the CWCR).

(b) *Five year retention period.* All supporting materials and documentation required to be kept under paragraph (a) of this section must be retained for five years from the due date of the applicable declaration, report, or advance notification, or for five years from the date of submission of the applicable declaration, report or advance notification, whichever is later. Due dates for declarations, reports and advance notifications are provided in parts 712 through 715 of the CWCR.

(c) *Location of records.* If a facility is subject to inspection under part 716 of the CWCR, records retained under this section must be maintained at the facility or must be accessible electronically at the facility for purposes of inspection of the facility by Inspection Teams. If a facility is not subject to inspection under part 716 of the CWCR, records retained under this section may be maintained either at the facility subject to a declaration, report, or advance notification requirement, or at a remote location, but all records must be accessible to any authorized agent, official or employee of the U.S. Government under § 721.1 of the CWCR.

(d) *Reproduction of original records.* (1) You may maintain reproductions

instead of the original records provided all of the requirements of paragraph (b) of this section are met.

(2) If you must maintain records under this part, you may use any photostatic, miniature photographic, micrographic, automated archival storage, or other process that completely, accurately, legibly and durably reproduces the original records (whether on paper, microfilm, or through electronic digital storage techniques). The process must meet all of the following requirements, which are applicable to all systems:

(i) The system must be capable of reproducing all records on paper.

(ii) The system must record and be able to reproduce all marks, information, and other characteristics of the original record, including both obverse and reverse sides (unless blank) of paper documents in legible form.

(iii) When displayed on a viewer, monitor, or reproduced on paper, the records must exhibit a high degree of legibility and readability. For purposes of this section, legible and legibility mean the quality of a letter or numeral that enable the observer to identify it positively and quickly to the exclusion of all other letters or numerals. Readable and readability mean the quality of a group of letters or numerals being recognized as complete words or numbers.

(iv) The system must preserve the initial image (including both obverse and reverse sides, unless blank, of paper documents) and record all changes, who made them and when they were made. This information must be stored in such a manner that none of it may be altered once it is initially recorded.

(v) You must establish written procedures to identify the individuals who are responsible for the operation, use and maintenance of the system.

(vi) You must keep a record of where, when, by whom, and on what equipment the records and other information were entered into the system.

(3) *Requirements applicable to a system based on digital images.* For systems based on the storage of digital images, the system must provide accessibility to any digital image in the system. The system must be able to locate and reproduce all records according to the same criteria that would have been used to organize the records had they been maintained in original form.

(4) *Requirements applicable to a system based on photographic processes.* For systems based on photographic, photostatic, or miniature photographic processes, the records must be maintained according to an index of all records in the system following the same criteria that would have been used to organize the records had they been maintained in original form.

§ 721.3 Destruction or disposal of records.

If BIS or other authorized U.S. government agency makes a formal or informal request for a certain record or records, such record or records may not be destroyed or disposed of without the written authorization of the requesting entity.

PART 722—INTERPRETATIONS [RESERVED]

Note: This part is reserved for interpretations of parts 710 through 721 and also for applicability of decisions by the Organization for the Prohibition of Chemical Weapons (OPCW).

PARTS 723–729 [RESERVED]

Dated: April 12, 2006.

Matthew S. Borman,

Deputy Assistant Secretary for Export Administration.

[FR Doc. 06–3747 Filed 4–26–06; 8:45 am]

BILLING CODE 3510–33–P

Federal Register

Thursday,
April 27, 2006

Part III

Department of Energy

Office of Energy Efficiency and Renewable Energy

10 CFR Part 431

Energy Conservation Program: Test Procedures for Distribution Transformers; Final Rule

DEPARTMENT OF ENERGY

Office of Energy Efficiency and Renewable Energy

10 CFR Part 431

[Docket No. EE–TP–98–550]

RIN 1904–AA85

Energy Conservation Program: Test Procedures for Distribution Transformers

AGENCY: Office of Energy Efficiency and Renewable Energy, Department of Energy.

ACTION: Final rule.

SUMMARY: Pursuant to Sections 323(b)(10) and 346(a) of the Energy Policy and Conservation Act, as amended, (EPCA or the Act), 42 U.S.C. 6293(b)(10) and 6317(a), the Department of Energy (DOE or the Department) promulgates a rule prescribing test procedures for measuring the energy efficiency of distribution transformers under EPCA, definitions to delineate the products covered by the test procedures, provisions (including a sampling plan) manufacturers must use to implement the test procedures, provisions to allow manufacturers to use calculation methods to determine the efficiency of some of their models, and enforcement testing for distribution transformers. The Department will use the new test procedures in evaluating what energy conservation standards are warranted for distribution transformers other than the low-voltage dry-type. When DOE promulgates such standards, then the test procedures and other provisions adopted today will be used to determine the efficiencies and assess compliance of the transformers subject to these standards. For low-voltage dry-type distribution transformers, the new standards prescribed for them in section 325(y) of EPCA, 42 U.S.C. 6295(y), go into effect on January 1, 2007, and all of the provisions of today's rule will become applicable to those transformers at that time.

EFFECTIVE DATE: This final rule is effective May 30, 2006, except for § 431.197(a)(4)(i), section 6.2(f) of Appendix A and section 6.2(b) and (c) of Appendix A which contain information collection requirements that have not been approved by the Office of Management and Budget (OMB). The Office of Energy Efficiency and Renewable Energy will publish a document in the **Federal Register** announcing the effective date.

FOR FURTHER INFORMATION CONTACT: Cyrus Nasseri, Project Manager, Test Procedures for Distribution Transformers, Docket No. EE–TP–98–550, United States (U.S.) Department of Energy, Energy Efficiency and Renewable Energy, Building Technologies Program, EE–2J, 1000 Independence Avenue, SW., Washington, DC 20585–0121, (202) 586–9138, email: *cyrus.nasseri@ee.doe.gov*.

Francine Pinto, Esq., U.S. Department of Energy, Office of General Counsel, GC–72, 1000 Independence Avenue, SW., Washington, DC 20585–0121, (202) 586–9507, email: *Francine.Pinto@hq.doe.gov*.

SUPPLEMENTARY INFORMATION:

I. Introduction
A. Authority and Background
B. Summary of the Final Rule
II. Discussion
A. General
B. Transformers Subject to the Test Procedure—Definition of Distribution Transformer
1. General
2. Incorporation and Definition of EPCA's Exclusions—General
3. Specific EPCA Exclusions
a. Transformers with Tap Ranges of 20 Percent or More and Special Impedance Transformers
b. Testing Transformers
c. Grounding Transformers
4. Other Exclusions Considered
5. Rebuilt or Refurbished Distribution Transformers
6. Coverage of Liquid-Filled Transformers
C. Test Procedure for Distribution Transformers
1. General Discussion
2. Specific Provisions of the Test Procedure
a. Testing Harmonic Transformers
b. Determining Winding Temperatures
c. Test Set Neutrals
d. Losses from Auxiliary Devices
e. Testing of Multiple Voltage Transformers
f. Short-Circuiting Conductor Strap
g. Revisions Suggested by NEMA in TP 2–2005
h. Language Corrections as to Conversion of the Resistance Measurement to the Reference Temperature and Conducting the No-Load Loss Test
D. Basic Model
1. General Discussion
2. Definition of a Basic Model
E. Manufacturer's Determination of Efficiency
1. General Discussion
2. Sampling Plan
3. Alternative Efficiency Determination Method (AEDM)
F. Enforcement Procedures
III. Procedural Requirements
A. Review Under Executive Order 12866
B. Review Under the Regulatory Flexibility Act of 1980
C. Review Under the Paperwork Reduction Act
D. Review Under the National Environmental Policy Act of 1969
E. Review Under Executive Order 13132
F. Review Under Executive Order 12988
G. Review Under the Unfunded Mandates Reform Act of 1995
H. Review Under the Treasury and General Government Appropriations Act of 1999
I. Review Under Executive Order 12630
J. Review Under the Treasury and General Government Appropriations Act, 2001
K. Review Under Executive Order 13211
L. Review Under Section 32 of the Federal Energy Administration Act of 1974
M. Congressional Notification
IV. Approval of the Office of the Secretary

I. Introduction

A. Authority and Background

Part C of Title III of the Energy Policy and Conservation Act (EPCA) provides for an energy conservation program for certain industrial equipment. (42 U.S.C. 6311–6317) Section 346 of EPCA states that the Secretary of Energy (Secretary) must prescribe testing requirements and energy conservation standards for those ''distribution transformers'' for which the Secretary determines that standards ''would be technologically feasible and economically justified, and would result in significant energy savings.'' (42 U.S.C. 6317(a)) The recent amendments to EPCA set forth in the Energy Policy Act of 2005 (EPACT 2005), Pub. L. 109–58, accomplish the following for this equipment: (1) Section 321(35) of EPCA now defines ''distribution transformer'' (42 U.S.C. 6291(35)), (2) Section 323(b)(10) of EPCA provides that the testing requirements ''shall be based on the 'Standard Test Method for Measuring the Energy Consumption of Distribution Transformers' prescribed by the National Electrical Manufacturers Association (NEMA TP 2–1998).'' (42 U.S.C. 6293(b)(10)),[1] and (3) section 325(y) of EPCA prescribes minimum efficiency levels for low-voltage dry-type distribution transformers (42 U.S.C. 6295(y)).

On October 22, 1997, the Department issued a notice setting forth its determination (hereafter referred to as the ''Determination'') that, based on the best information it had available, energy conservation standards for electric distribution transformers appeared to be technologically feasible and economically justified, and were likely to result in significant energy savings. 62 FR 54809.

The Department subsequently began the process for its issuance of test procedures for distribution transformers. On February 10, 1998, the Department held a public workshop (the ''1998 workshop'') to discuss the following issues: (a) Whether DOE

[1] Section 323(b)(10)(B) also provides that the Department may ''review and revise'' the test procedures established under that subparagraph. (42 U.S.C. 6293(b)(10)(B))

should adopt national and international consensus standards as its test procedures for determining the energy efficiency of distribution transformers, (b) defining the transformers that the test procedures will cover, (c) whether, and to what extent, there is a burden on industry, especially on manufacturers, because of additional testing and data processing, (d) the definition of ''basic model'' for distribution transformers, (e) the sampling plan for units to be tested, (f) the selection of an energy consumption measure for distribution transformers, (g) the selection of reference temperatures, (h) the requirements for applying corrections to measurement data, and (i) the requirements for quality assurance in testing. The Department also gave interested parties an opportunity to submit written comments on these issues.

In 1998, the National Electrical Manufacturers Association (NEMA) published ''NEMA Standards Publication No. TP 2–1998, *Standard Test Method for Measuring the Energy Consumption of Distribution Transformers*,'' (NEMA TP 2–1998) a publication that extracts and presents pertinent parts of the current industry standards for distribution transformer efficiency testing. NEMA TP 2–1998 also presents a weighted average method to compute the energy efficiency of transformers, in order to demonstrate compliance with the efficiency levels in NEMA Standard TP 1–1996 (NEMA TP 1).[2] Comments received at the 1998 workshop, written comments associated with this workshop, and NEMA TP 2–1998 formed the basis for preparing the November 12, 1998, Notice of Proposed Rulemaking (the ''1998 proposed rule'') in this proceeding. 63 FR 63359.

In the 1998 proposed rule, the Department proposed to adopt testing methods that (1) it could use to evaluate distribution transformers during the development of efficiency standards, and (2) manufacturers and DOE would use to determine the efficiency of the transformers which the standards would cover. DOE proposed to incorporate by reference as its test methods the provisions from either the Institute of Electrical and Electronics Engineers (IEEE) Standards C57.12.90–1993 and C57.12.91–1993 (using IEEE C57.12.00–1993 as an additional reference source), or NEMA TP 2–1998. The 1998 proposed rule also included proposed definitions of ''distribution transformer'' and related terms, of terms used in the test procedure provisions, and of ''basic model.'' It also proposed a sampling plan for applying the test procedures to perform compliance testing. The sampling approach was based on the plan for compliance testing in 10 Code of Federal Regulations (CFR) Part 430, which contains energy efficiency requirements for consumer products, but tailored to distribution transformers and with a minimum sample size of five units. The Department selected this approach because it appeared to provide a satisfactory balance between assuring the accuracy of efficiency ratings for distribution transformers and minimizing the testing burden on manufacturers. The Department also sought comment on three alternative compliance approaches for basic models produced in small numbers.

DOE held a public meeting on January 6, 1999, on the 1998 proposed rule and received nine written comments. After reviewing the oral and written comments, DOE concluded that the comments raised a number of significant issues that required additional analysis. On June 23, 1999, the Department reopened the comment period on the 1998 proposed rule, 64 FR 33431, (the ''1999 reopening notice'') to provide an opportunity for additional public comment on the following issues: (a) The suitability of NEMA TP 2–1998 for adoption as the DOE test procedure; (b) the adequacy of stakeholder opportunity to review NEMA TP 2–1998; (c) the transformers covered under the definition of ''distribution transformer;'' (d) the suitability of the definition of ''basic model'' for the purpose of grouping transformers to limit the test burden; and (e) the appropriateness of the proposed sampling plan and a number of alternatives for demonstrating compliance. The Department received five comments in response to the 1999 reopening notice.

On the basis of these comments, two additional comments it received subsequently, and its review of the issues raised by the 1998 proposed rule and the 1999 reopening notice, the Department issued a supplemental notice of proposed rulemaking (SNOPR). 69 FR 45506 (July 29, 2004). In the SNOPR, DOE proposed to adopt (1) a new ''stand alone'' test procedure for distribution transformers, drafted by the Department and consisting almost entirely of test methods contained in NEMA TP 2–1998 and other existing industry standards, (2) revised definitions to establish which transformers the test procedure covers, (3) a new definition of ''basic model'' and a new sampling plan, to implement the test procedures, (4) provisions to allow manufacturers to use calculation methods, instead of testing, to determine the efficiency of some of their models, and (5) enforcement procedures, including a testing protocol, for distribution transformers. DOE held a public meeting on September 27, 2004, on the SNOPR (the ''2004 public meeting'') and received six written comments.

Concurrently with this rulemaking, the Department has evaluated the establishment of energy conservation standards for distribution transformers. On October 2, 2000, the Department made available a *Framework Document for Distribution Transformer Energy Conservation Standards Rulemaking*, which was the subject of a public workshop on November 1, 2000, and on which stakeholders submitted written comments before and after the workshop. 65 FR 59761 (October 6, 2000). Thereafter, the Department visited manufacturers of distribution transformers and posted on DOE's website[3] several draft reports concerning the development of standards for these transformers. On the same day that it published the SNOPR, DOE issued an Advance Notice of Proposed Rulemaking (ANOPR) for distribution transformer standards. 69 FR 45376 (July 29, 2004). Several of the written comments DOE received in response to the ANOPR address issues raised in the SNOPR, and the Department has referenced them in the docket of this rulemaking and has considered them in formulating today's final rule.

On October 18, 2005, the Department published a final rule to place in its regulations the energy conservation standards, and related definitions, that Congress prescribed in EPACT 2005 for certain consumer products and commercial and industrial equipment. 70 FR 60407. The rule included the definitions for ''distribution transformer'' and ''low-voltage dry-type distribution transformer,'' and the standards for low-voltage dry-type distribution transformers, that were contained in EPACT 2005. 10 CFR sections 431.192 and 431.196. The Department put the provisions for all of the commercial and industrial products covered by EPACT 2005, including those for distribution transformers, in 10 CFR Part 431. 70 FR 60414–18. In the prior **Federal Register** notices dealing

[2] NEMA TP 1 contains suggested efficiency levels. Its full name and title are ''NEMA Standards Publication No. TP 1–1996, *Guide for Determining Energy Efficiency for Distribution Transformers.*'' NEMA TP 1 was updated in 2002, with modifications to some of the efficiency levels.

[3] *http://www.eere.energy.gov/buildings/appliance_standards/commercial/dist_transformers.html*

with test procedures for distribution transformers, DOE had proposed adding a new part 432 to include requirements for distribution transformers. 63 FR 63376, 63369; 69 FR 45517, 45520. As a result of DOE's decision, in response to EPACT 2005, to incorporate provisions for distribution transformers into 10 CFR Part 431, today's final rule places the new test procedures for this equipment in Subpart K to 10 CFR Part 431.

B. Summary of the Final Rule

The test procedure in today's rule is based on the test methods contained in NEMA TP 2–1998 [4] and IEEE Standards C57.12.90–1999 and C57.12.91–2001. Initially, the Department will use the test procedure to evaluate distribution transformers for which it is currently developing energy conservation standards. When DOE promulgates such standards, the Department will then require manufacturers to use the test procedure to determine compliance with the standards and as a basis for their efficiency representations for covered transformers. The Department would also use the test procedure in any enforcement proceeding concerning compliance with such standards and related labeling requirements. In addition, the test procedures will become mandatory for all of these purposes—compliance determination, representations and enforcement—for low-voltage dry-type distribution transformers when standards go into effect for them, pursuant to 42 U.S.C. 6295(y), on January 1, 2007.

The language of today's rule sets forth all testing requirements, without reference to other sources, for determining the energy efficiency of distribution transformers. Measurement of electric power consumed by the transformer is in the form of no-load and load losses. The rule specifies methods with which to measure the temperature, current, voltage, extent of distortion in voltage waveform, and direct current resistance of the windings. The rule also prescribes provisions for calculating efficiency. The testing methods are largely the same as those proposed in the SNOPR, with several clarifying changes and a few changes to provide manufacturers with greater flexibility.

[4] In September 2005, NEMA provided the Department with its revised test procedure document, TP 2–2005, which is similar to the rule language in the SNOPR. The Department has treated this submission as a comment on the SNOPR, has incorporated into today's rule a number of the changes that this revision made to the SNOPR's rule language, and addressed below the significant differences between the revision and the SNOPR.

Today's rule amends the definition of ''distribution transformer'' that DOE recently adopted, 70 FR 60416, by adding capacity limits (the same ones the Department proposed in the SNOPR), making minor language and format changes, and clarifying the exclusion of transformers with tap ranges greater than 20 percent. As discussed below, today's definition conforms to, and incorporates the relevant language from, the definition that EPACT 2005 added to EPCA. (42 U.S.C. 6291(35)) The Department's definition establishes which transformers the test procedure covers. It uses the approach DOE proposed in the SNOPR—a broad definition with numerical criteria, but narrowed by the exclusion of specific types of transformers, many of which are not commonly understood to be distribution transformers. The numerical criteria (except for the added capacity limits) and the exclusions are the same as those in EPCA's new definition. They include virtually the same primary and secondary voltage ranges the Department proposed in the SNOPR, most of the exclusions DOE proposed, and no additional exclusions. Today's definition of distribution transformer, however, does not include the exclusions of K-factor and harmonic mitigating distribution transformers, which DOE proposed in the SNOPR but which are absent from the EPCA definition. Stakeholders will have the opportunity in the energy conservation standards rulemaking to comment to the Department on whether standards should apply to these transformers.

Today's rule contains several features designed to reduce the number of transformers that manufacturers would have to test. First, the Department allows manufacturers to group models into ''basic models'' for testing purposes, and defines ''basic model'' as proposed in the SNOPR, with minor clarifications. Second, the rule includes the same type of compliance sampling plan proposed in the SNOPR, except that the sampling plan tolerance is based on a single-unit sample tolerance (confidence limit) of eight percent, rather than the five percent DOE proposed. And third, today's rule allows manufacturers to use alternative methods, other than testing, to determine the efficiency of some basic models. The rule incorporates the SNOPR proposal except that manufacturers need not use a different method for each of the following groups of distribution transformers: low-voltage dry-type, medium-voltage dry-type, and liquid-immersed. Manufacturers can use a single method for transformers in two or all three of these groups so long as the method is validated separately in each of the groups for which the manufacturer uses it. Today's rule also contains the enforcement procedures proposed in the SNOPR, including a testing protocol, modified to be consistent with the revised compliance sampling plan tolerance. Finally, the Department is republishing in this rule, without substantive change, the standards for low-voltage dry-type distribution transformers that it originally codified at 70 FR 70417. Today's rule contains a revised table that has a clearer, more appropriate format than the table in the original rule. The table also includes the reference conditions for the standards, which DOE inadvertently omitted from the initial codification but which are essential elements of the standards, as set forth in Table 4–2 of NEMA TP 1–2002, from which EPCA incorporates the standards. (42 U.S.C. 6295(y))

II. Discussion

A. General

Representatives of several organizations attended the public meeting on September 27, 2004, including trade associations (Copper Development Association, National Electrical Manufacturers Association (NEMA), and National Rural Electric Cooperative Association), transformer manufacturers (Acme Electric Corporation (ACME), ERMCO Distribution Transformers (ERMCO), Federal Pacific Transformer (Federal Pacific or FPT), Kuhlman Electric Corporation, Pemco Corporation (Pemco), and Howard Industries, Inc. (Howard Industries or Howard)), a core steel manufacturer (AK Steel Corporation), electric utility companies (Georgia Power Company and Ameren Services), the Canadian Government (Natural Resources Canada), the National Institute of Standards and Technology (NIST) of the U.S. Department of Commerce, and private research/consulting entities (BB&F Associates, Lawrence Berkeley National Laboratory, Merritt and Associates, Navigant Consulting, Inc., and Optimized Program Services, Inc.). NEMA also submitted a written statement in advance of the public meeting. Following the public meeting, ERMCO, Federal Pacific, Howard Industries, Cooper Power Systems (Cooper) and NEMA each submitted a written statement. In addition, the Department received ten comments in its energy conservation standards rulemaking that pertained to both the

test procedure and the energy conservation standards rulemakings. Therefore, the Department cross-referenced these comments from the energy conservation standards docket (EE–RM/STD–00–550) to this proceeding. The ten cross-referenced comments were submitted by Pemco, ERMCO, Harmonics Limited, NEMA, Federal Pacific, HVOLT, Inc. (HVOLT), Oregon Department of Energy (ODOE), Howard Industries, Power Quality International (PQI) and EMS International Consulting (EMS).

The following summarizes the issues addressed in the preamble of the SNOPR and discusses in detail the points on which significant comments were presented during and after the public meeting.

B. Transformers Subject to the Test Procedure—Definition of Distribution Transformer

1. General

Although EPCA directed DOE to prescribe energy conservation standards and test procedures for certain ''distribution transformers'' (42 U.S.C. 6317(a)), until recently the Act did not define that term. Therefore, the Department undertook to adopt such a definition in this rulemaking. It proposed a definition in the 1998 proposed rule, 63 FR 63362–63, 63369–70, addressed the issue again in the 1999 reopening notice, 64 FR 33432–34, and proposed a substantially revised definition in the SNOPR. 69 FR 45506. That revised definition included transformers meeting numerical criteria as to primary and secondary voltage and capacity, and excluded specifically listed types of transformers. 69 FR 45509–10, 45520–22. The Department designed that definition primarily to (1) encompass within ''distribution transformer'' only those transformers commonly understood to be distribution transformers, i.e. those made for the distribution of electricity, and (2) exclude those distribution transformers for which standards clearly would not produce significant energy savings. 69 FR 45509–10.

EPACT 2005 recently revised EPCA to include a definition of ''distribution transformer'' (42 U.S.C. 6291(35)), thus filling the gap DOE had sought to fill with its own definition. As part of the final rule mentioned above, to place in the CFR certain provisions prescribed in EPACT 2005, the Department incorporated this new definition, almost verbatim, into 10 CFR section 431.192. 70 FR 60407, 60416–17. (In the paragraphs that follow, the new definition is referred to as the ''EPCA'' or ''new'' definition.) The EPCA definition is similar in approach and content to the definition proposed in the SNOPR. It includes numerical criteria—a maximum input voltage and frequency that are similar to those in the SNOPR definition, and a maximum output voltage that is identical—as well as a list of excluded transformers that is quite similar to the SNOPR's list of excluded transformers. (The differences between EPCA's list of exclusions and the SNOPR's list are discussed below. Today's rule adheres to the EPCA list.) The new definition also authorizes DOE to add to the list of exclusions any type of transformer that meets certain criteria.

One significant difference exists, however, between the numerical criteria in the EPCA and SNOPR definitions. No capacity ranges are stated in the new definition, whereas the SNOPR definition limits the term ''distribution transformer'' to liquid immersed units with a capacity of 10 kVA to 2500 kVA, and dry-type units with a capacity of 15 kVA to 2500 kVA. (The Department has been using a similar definition to delineate the transformers it is evaluating in the standards rulemaking. 69 FR 45381–45384.) Transformers outside of these ranges are not typically used for electricity distribution, which is the commonly understood function of a distribution transformer. The Department received no adverse comment on these proposed ranges. Moreover, NEMA agreed with the proposed lower capacity limit for dry-type transformers, indicating that efficiency standards for transformers with lower kVA ratings would fail to meet the criteria in section 346 of EPCA. (NEMA, No. 39 at p. 2; Public Meeting Transcript, No. 42.11 at p. 22) [5] But notwithstanding the lack of any explicit capacity limits in the EPCA definition of distribution transformer, as a practical matter an upper capacity limit is implicit in that definition. A transformer's capacity is to some extent tied to its primary (input) and secondary (output) voltages. Therefore, the maximum limits for primary and secondary voltages, of 34.5 kilovolts and 600 volts, respectively, in the EPCA definition have the practical effect of limiting transformers that meet the definition to those with a maximum capacity in the range of approximately 3750 to 5000 kVA, or possibly slightly higher. The voltage limits in the EPCA definition, however, subsume no lower limit on capacity.

It is unclear whether ''distribution transformer'' as now defined in EPCA and DOE's regulations is, or can be, subject to capacity ranges other than the just-mentioned upper limit. On the one hand, the new definition includes no such capacity limitation, and it authorizes DOE to exclude from the definition, by rule, any transformer if it is designed for a special application, is unlikely to be used in a general purpose application, and significant energy savings would not result from applying standards to it. (42 U.S.C. 6291(35)(B)(iii)) This suggests that unless, and until, DOE acts and identifies capacity ranges that meet these criteria, they are not part of the new definition of distribution transformer. On the other hand, it is uncertain whether Congress intended to regulate as distribution transformers units outside of the capacity ranges in the SNOPR, because few are used to distribute electricity. In addition, at the same time it enacted the new distribution transformer definition, Congress also directed use of, and incorporated into EPCA, provisions of NEMA TP 2–1998 and NEMA TP 1–2002, respectively (42 U.S.C. 6293(b)(10) and 6295(y)), both of which apply only to transformers with capacity ranges similar to those in the SNOPR definition. Thus, Congress may have intended to limit the term ''distribution transformer'' to transformers within the capacity ranges that normally characterize transformers that distribute electricity. If so, that would mean the Department's authority to regulate the efficiency of transformers under 42 U.S.C. 6317 would be limited to transformers within these capacity ranges.

Given the inclusive language of EPCA's definition of distribution transformer, however, the Department is not prepared at this point to infer that EPCA imposes this limitation. The Department also does not possess information on whether transformers outside of these ranges would meet the criteria in 42 U.S.C. 6291(35)(B)(iii), particularly the one on energy savings from applying standards, for exclusion from the definition of distribution transformer. The standards rulemaking

[5] A notation in the form ''NEMA, No. 39 at p. 2'' identifies a written comment the Department has received and has included in the docket of this rulemaking. This particular notation refers to a comment (1) by the National Electrical Manufacturers Association (NEMA), (2) in document number 39 in the docket of this rulemaking (maintained in the Resource Room of the Building Technologies Program), and (3) appearing on page 2 of document number 39. Likewise, ''Public Meeting Transcript, No. 42.11 at p. 22,'' for example, would refer to page 22 of the transcript of the ''Public Meeting on Test Procedures for Distribution Transformers'' held in Washington, DC, September 27, 2005, which is document number 42.11 in the docket of this rulemaking.

for distribution transformers, in which DOE would develop such information, and this test procedure rulemaking to a slightly lesser extent, have focused almost entirely on transformers within the capacity ranges. Thus, at the present time, DOE is proceeding on the premise that ''distribution transformer'' as defined in EPCA includes transformers outside the capacity ranges in the SNOPR.

One option, therefore, would be for the Department to retain this definition in its rules, not revise it in today's rule, and apply it in any standards rulemaking as well. That would have little or no impact on adoption of the test procedures in today's rule, but it might delay issuance of the rule. The Department believes that the test procedures as proposed in the SNOPR and revised for inclusion in today's rule would be valid for determining the efficiency of transformers with capacities up to the limits implicit in EPCA's definition, and below the lower end of the proposed ranges proposed in the SNOPR. Nevertheless, because DOE had not proposed to apply the test procedure to transformers with such capacities, it would have to provide some opportunity for public comment on the applicability of the test procedure to those transformers. Doing so could delay completion of this rulemaking.

The impact in the standards rulemaking, of applying the EPCA definition without capacity limits, would be much greater than the impact of doing so in this test procedure rulemaking. Formulating standards for a product involves developing an understanding of, and evaluating, factors such as the nature of the product, its market, the technical feasibility of potential efficiency improvements, the manufacturing costs of such improvements, the resulting energy savings, the cost of the improved product(s) to purchasers, the impact of efficiency standards on manufacturers and utilities, and environmental and employment impacts, as well as other factors unique to a particular product. The Department has been engaged in such activities with respect to distribution transformers for over five years, examining for the most part products within the capacity ranges in the SNOPR definition of distribution transformer. It is now developing proposed standards for these products. To expand that rulemaking now to include transformers outside these ranges would impose a substantial burden on DOE, and would substantially delay the rulemaking by requiring that the Department go back to the beginning of the process of evaluating standards for these additional transformers. Neither DOE nor stakeholders contemplated that the standards rulemaking would cover these additional transformers. To the contrary, as indicated above, interested parties had reached a consensus as to the transformers to be covered in the standards rulemaking, and expect that DOE will now move as promptly as possible to promulgate standards for these transformers.

Another possibility would be for the Department to attempt to preserve the current scope of the standards and test procedure rulemakings by pursuing exclusion from the definition of distribution transformer, under 42 U.S.C. 6291(35)(B)(iii), of transformers with capacities outside the ranges specified in the SNOPR definition. This too would delay the rulemakings. For DOE to gather relevant information and assess whether transformers above and below the SNOPR's capacity ranges meet the criteria in 42 U.S.C. 6291(35)(B)(iii), would be burdensome and time consuming. And if DOE determined exclusion of these transformers to be warranted, it would have to undertake additional rulemaking proceedings to achieve such exclusion. Moreover, if DOE were to conclude that these transformers do not meet the criteria for exclusion, DOE would be in essentially the same position it is in now.

The Department is determined to avoid further delays in the rulemakings on standards and test procedures for distribution transformers. Therefore, it does not wish either to expand these rulemakings to cover transformers outside the SNOPR's capacity ranges, or to pursue at this time exclusion of such transformers from the definition of distribution transformer. Furthermore, the transformers within these capacity ranges clearly are within the new EPCA definition of distribution transformer, so the Department is authorized to pursue standards for them, and DOE believes there are ample grounds to conclude that such standards are warranted under the criteria of section 346(a) of EPCA, 42 U.S.C. 6317(a).

For these reasons, § 431.192 of today's final rule modifies the EPCA definition of distribution transformer that was recently incorporated into the DOE rules by adding to it the kVA capacity limitations in the SNOPR definition. This definition will not include, as it could not, any transformers excluded from the EPCA definition, and today's test procedure and any standards rulemaking will not cover such transformers. The Department is adopting this definition, with its capacity limitations, for the purpose of delineating the coverage of today's rule, as well as the transformers that will be evaluated in the current standards rulemaking for distribution transformers. The inclusion of the capacity limitations in today's definition does not mean that DOE has concluded that the EPCA definition of distribution transformer includes such limitations. Rather, at some point after completion of the current rulemakings as to distribution transformers, the Department intends to evaluate transformers with larger and smaller capacities than those included in today's definition, review how EPCA should be construed with regard to those transformers, and decide what if any action to take with regard to adoption of efficiency requirements for such transformers. If DOE adopts efficiency requirements for any of these transformers, it would amend the definition of ''distribution transformer'' in its regulations accordingly.

Finally, the capacity limitations in today's definition of ''distribution transformer'' will have no effect on the existing requirements for low-voltage dry-type distribution transformers. EPCA sets forth a definition and standards for this equipment, 42 U.S.C. 6291(38) and 6295(y), which DOE incorporated into its regulations at 10 CFR sections 431.192 and 431.196(a). Because the definition states that a ''low-voltage dry-type distribution transformer'' is a ''distribution transformer'' that meets certain criteria, the addition of capacity limits to the definition of ''distribution transformer'' could be read as affecting what constitutes a ''low-voltage dry-type distribution transformer'' under the regulation. As stated above, however, the maximum limits for primary and secondary voltages of 34.5 kilovolts and 600 volts, respectively, in EPCA's definition of ''distribution transformer,'' in effect limit transformers that meet that definition to those with a maximum capacity of approximately 3750 to 5000 kVA. Similarly, one of the criteria for a ''low-voltage dry-type distribution transformer'' is that its primary voltage not exceed 600 volts, 10 CFR section 431.192, which contemplates a secondary voltage much lower than 600 volts. The obvious effect of this is that a transformer will be a ''low-voltage dry-type distribution transformer'' under the regulations only if its maximum capacity is far less than 3750 kVA, and in all likelihood less than the 2500 kVA maximum in today's definition of distribution transformer. In addition,

EPCA and DOE rules prescribe standards for low-voltage dry-type distribution transformers only with kVA's within the range of 15 to 1000, 42 U.S.C. 6295(y) and 10 CFR section 431.196(a), which are within the 15 to 2500 kVA range that today's definition of ''distribution transformer'' incorporates for dry-type transformers. For these reasons, the capacity limitation in today's definition of ''distribution transformer'' has no impact on the current DOE and EPCA requirements for low-voltage dry-type distribution transformers.

2. Incorporation and Definition of EPCA's Exclusions—General

As indicated above, DOE incorporated into its rules the new EPCA definition of distribution transformer, including the language listing specific types of excluded transformers and authorizing DOE to add to that list. 70 FR 60416–17. Upon further review, the Department has decided to adopt in Section 431.192 of today's rule several editorial, clarifying and format changes to the language concerning the exclusions.

To begin with, this language states that the term ''distribution transformer'' does not include ''a transformer that is designed to be used in a special purpose application and is unlikely to be used in general purpose applications, such as [the list of specifically excluded transformers]'' (42 U.S.C. 6291(35)(B)(ii); 70 FR 60416–17) At first reading, this language appears to exclude unspecified types of transformers that meet the criteria just quoted, and to introduce a list consisting of specific illustrations of the transformers excluded. However, the very next paragraph of the definition states that DOE may, ''by rule,'' exclude ''any transformer not listed'' which meets criteria that, in substantial part, are virtually identical to the criteria just quoted. (42 U.S.C. 6291(35)(B)(iii); 70 FR 60416) If the definition were read as excluding any transformer, in addition to those specifically listed, that met these criteria, this would obviate and render null the provision authorizing DOE to exclude additional transformers that meet these criteria, but only through rulemaking. The Department believes, however, that the soundest construction of these provisions is that transformers not specifically listed in the definition can be excluded only through a DOE rulemaking, thus providing certainty as to which transformers are covered at any given point in time. Use of the language quoted at the beginning of this paragraph to introduce the list of specifically excluded transformers serves to describe those transformers, and helps indicate the types of transformers the statute authorizes DOE to exclude by rule. Therefore, because this provision does not actually delineate excluded transformers, and in order to avoid confusion as to the function of this language, DOE in today's rule has amended section 431.192 by excluding it.

As just indicated, DOE incorporated into its definition of distribution transformer language from EPCA that authorizes DOE to add to the list of excluded transformers. (42 U.S.C. 62912(35)(B)(iii); 70 FR 60416–17) Because this language authorizes action by DOE and does not actually describe transformers that are not ''distribution transformers,'' upon further reflection the Department believes that the language need not be included in the definition in the DOE rules. Therefore, the Department has amended its definition of ''distribution transformer'' by omitting this language from section 431.92 of today's rule.

As to the specific exclusions, the Department indicated when it adopted the EPCA definition, 70 FR 60408, that the definition uses incorrect terms in its exclusions of ''Uninterruptible Power System [UPS] transformer, impedance transformer, * * * [and] sealed and nonventilating transformer.'' (42 U.S.C. 6291(35)(B)(ii)) In accordance with its expressed intention to address such minor drafting problems in future rulemaking proceedings, where Congress has not already done so, 70 FR 60408, in today's rule DOE is amending its definition of distribution transformer to correct use of these terms. First, UPS transformers are commonly referred to as ''Uninterruptible Power *Supply* transformers,'' not ''Uninterruptible Power *System* transformers,'' and therefore DOE adopts the former term in today's rule. Second, every transformer has an impedance, but only transformers with impedances outside of normal ranges, *i.e.,* ''special-impedance'' transformers, warrant exclusion from standards. The Department had proposed to exclude such transformers from its definition of distribution transformer in the SNOPR, and NEMA excludes them from coverage of NEMA TP 1 and TP 2. Therefore, DOE construes EPCA as excluding ''special impedance'' transformers, and today's rule substitutes that term for ''impedance'' in the list of exclusions. Third, IEEE standards define ''sealed'' transformers separately from ''nonventilated'' transformers, treating them as two different types of transformers. The definitions are such that it would be highly unlikely for a particular transformer to be both ''sealed'' and ''nonventilated.'' In the SNOPR, DOE treated them as two separate exclusions from the term ''distribution transformer,'' as it believes is appropriate. In light of the foregoing, DOE construes EPCA as containing separate exclusions for sealed and nonventilated transformers, and today's rule so provides.

The Department has also changed the format for the specific exclusions in section 431.192 of today's rule, and adopted the approach in the SNOPR, by placing the exclusions in a numbered list, rather than simply listing them seriatim in a single paragraph. The Department believes this will make the rule easier to read and use.

Finally, conforming to the approach in EPCA, DOE's recently adopted rule lists the 12 types of transformers it excludes from the term ''distribution transformer,'' but contains no definition for any of them. 70 FR 60416–17. In the SNOPR, DOE proposed definitions for the transformers it proposed to exclude. The Department believes such definitions are warranted because they help to clarify exactly which transformers are covered. Today's rule includes seven definitions drawn from IEEE standards, and five that DOE developed based on industry catalogues, practice and nomenclature. DOE believes they represent a reasonable construction of the EPCA exclusions. Except as indicated in the discussion below of the definitions of special impedance, testing and grounding transformers, they are the same definitions DOE proposed in the SNOPR.

3. Specific EPCA Exclusions

a. Transformers With Tap Ranges of 20 Percent or More and Special Impedance Transformers

EPCA and the Department's recently adopted rule exclude from the definition of ''distribution transformer'' transformers with ''multiple voltage taps, the highest of which equals at least 20 percent more than the lowest.'' 42 U.S.C. 6291(35)(B)(i); 70 FR 60416. The Department reads this language as excluding transformers with a tap range of 20 percent or more. It is similar to the exclusion in the SNOPR of transformers with a tap range greater than 15 percent. The language EPCA uses for this exclusion, however, is ambiguous.

Each distribution transformer with multiple voltage taps has a nominal voltage at which it normally operates and other voltages (taps), typically

above and below its nominal voltage at which it can also operate. The voltage taps enable the transformer to be connected to distribution lines at these other voltages. The tap range represents the difference between the highest and lowest voltage taps relative to the nominal voltage, expressed as a percentage. It is unclear whether, under the EPCA exclusion, a transformer's tap range is determined by computing the percentage of the voltage difference between its lowest and highest voltage taps relative to the voltage of the lower tap, or, as the industry has traditionally done, by adding the sum of the percentages by which the highest and the lowest voltage taps deviate from the nominal voltage. (The traditional industry method is equivalent to the percentage of the difference between the lowest and highest voltage taps relative to the nominal voltage.) These two approaches generally yield two different results for tap range value for any given transformer with multiple voltage taps. For example, a 600-volt primary transformer with two 2.5-percent taps above and four 2.5-percent taps below the nominal, with the highest tap being 630 volts and the lowest 540 volts, would normally be referred to as having a tap range of 15 percent (*i.e.,* 6 times 2.5 percent, or 90 volts as a percentage of 600 volts = 15 percent). Similarly, a 600-volt primary with three 2.5-percent taps above and three 2.5-percent taps below the nominal, with the highest tap being 645 volts and the lowest 555 volts, would also be referred to under the traditional industry approach as having a tap range of 15 percent. However, if the tap percentages for these transformers were calculated as a percentage of the voltage rating of the lowest tap (540 volts and 555 volts in these examples), these two transformers would have a tap range of 16.2 percent and a 16.7 percent, respectively.

The Department believes that EPCA's exclusion of transformers with a tap range of 20 percent or more is best construed as reflecting standard industry practice, such that tap ranges do not vary with the voltage rating of the lowest tap. Rather, tap range should be calculated, and excluded transformers identified, based on the industry practice of calculating the transformer's percent tap range relative to the nominal voltage of the transformer. Accordingly, the Department interprets EPCA as excluding transformers from the definition of ''distribution transformer'' when the aggregate of the transformer's highest to lowest tap voltages, relative to the nominal voltage, equals at least 20 percent. In section 431.192 of today's rule, the Department has incorporated this interpretation into its regulations by adding clarifying language to amend the regulation containing this exclusion that it adapted from EPCA in 70 FR 60416.

The Department also notes that EPCA includes this exclusion in a separate paragraph, rather than in the list that comprises the other exclusions from the definition of ''distribution transformer.'' (42 U.S.C. 6291(35)(B)(i)–(ii)) See 70 FR 60416. To present this exclusion in the same format as the other exclusions, in section 431.192 of today's rule the Department has added ''Transformer with Tap Range of 20 percent or more'' to the list of exclusions and defined that term using the EPCA language that contains the exclusion, modified as just indicated.

As indicated above, the Department had proposed in the SNOPR to exclude transformers with tap ranges greater than 15 percent. 69 FR 45110, 45420–22. Pemco, a manufacturer, expressed the concern that, if the Department declines to adopt efficiency standards for distribution transformers with a tap range of greater than 15 percent (currently the standard tap range for low voltage dry-type transformers), manufacturers might begin producing transformers with a slightly larger tap range, and such transformers would not be covered by standards. (Pemco, No. 48 at p. 2) That could create a significant loophole under the regulations. Since the 20-percent tap range is larger than the previously proposed 15-percent range, exclusion of transformers with tap ranges of at least 20 percent should reduce the risk that transformers with slightly larger tap ranges would be produced in order to avoid coverage. But that risk will not be completely eliminated.

The exclusion of special impedance transformers, as provided in EPCA, as recently incorporated by DOE into 10 CFR section 431.192, and as previously proposed by DOE in the SNOPR, raises a similar issue. The issue is brought into focus by DOE's proposed definition for these transformers in the SNOPR. The proposed definition specified a normal impedance range for each standard kVA rating, and stated that a ''special-impedance transformer'' would be any transformer with an impedance outside the applicable range. Any such transformer would not be a ''distribution transformer'' covered by the proposed rule. 69 FR 45510–11, 45520–22. No commenter objected to this exclusion, and only one specifically addressed it. Howard Industries recommends that DOE replace its proposed normal impedance ranges with ranges included in Howard's comments, which are more in line with ranges ANSI uses to delineate special impedance transformers and on which most utility systems are based. (Howard, No. 55 at p. 3) For most kVA levels, DOE's proposed ranges are broader than Howard's. Hence, DOE's ranges would result in exclusion of fewer transformers, by classifying fewer as ''special impedance.'' In its revised test procedure document, NEMA TP 2–2005, NEMA incorporated DOE's proposed normal impedance ranges. (NEMA, No. 60 Attachment 1 at pp. 5–6)

The Department is concerned that some transformers designed for electricity distribution could be manufactured with impedances outside normal ranges so that they would not be subject to otherwise applicable efficiency standards. Such transformers could be less expensive to manufacture than normal impedance transformers manufactured in compliance with the standards, and therefore could have a competitive advantage over standards-compliant distribution transformers. If this occurred, it would subvert the standards. At best, the manufacturer(s) of such new, non-complying transformers would sell them in place of complying products they would otherwise have sold, and the product would have a share of the market for which DOE analysis demonstrated that standards were technologically feasible and economically justified. This would reduce energy savings below the levels that standards under EPCA are designed to achieve, and reduce the benefits transformer consumers and the public would realize from the standards. At worst, to avoid significant losses of market share to the competing, non-complying transformer, other manufacturers would be forced to produce the same type of non-complying unit. In that case, all or most of the benefit of standards could be lost.

The Department believes that use of the impedance ranges in the proposed rule, to delineate special impedance transformers, is a reasonable implementation of EPCA's exclusion of these transformers. This is the same approach, discussed above, that EPCA follows in its exclusion of transformers with non-standard tap ranges, in that only transformers that are considerably outside the normal ranges are excluded from coverage. To construe EPCA otherwise, that is, to construe it as excluding from coverage any transformer that falls outside the current, standard normal impedance ranges, could spawn a new generation of distribution transformers with impedances outside these ranges, which

would not be subject to Federal efficiency standards and test procedures. As just mentioned, this could subvert DOE's energy efficiency standards. NEMA's inclusion of DOE's proposed impedance ranges in the revised TP 2 standard provided to the Department, and the fact that only one commenter objected to them, indicate they are a sound basis for delineating the special impedance transformers that are excluded from coverage under today's rule and DOE's efficiency standards. Therefore, section 431.192 of today's rule retains the SNOPR's proposed definition of the ''special-impedance transformers'' excluded from the term ''distribution transformer.''

The Department recognizes that this approach may not prevent attempts to circumvent its efficiency requirements through manufacture of distribution transformers that appear to, or do, fall just within this exclusion or the exclusion of transformers with tap ranges of 20 percent or more. Such transformers could conceivably be manufactured for use in standard applications to distribute electricity in power distribution systems, but with efficiencies below those required by DOE's standards. Indeed, other exclusions from today's definition of distribution transformer could also be exploited to justify manufacture of transformers, for standard distribution applications, that do not meet DOE standards. The Department believes one such example may be the exclusion for drive (isolation) transformers. Such transformers can be similar to standard distribution transformers. A manufacturer might be able to produce and market, for standard distribution uses, a transformer that does not meet DOE efficiency standards but that clearly, or arguably meets, DOE's definition of ''drive (isolation) transformer,'' and claim that it is not a ''distribution transformer'' as defined by DOE.

The Department intends to strictly and narrowly construe the exclusions from the definition of ''distribution transformer.'' It will also take appropriate steps, including enforcement action if necessary, if any manufacturer or other party erroneously invokes one of the exclusions as a basis for marketing a transformer that is a ''distribution transformer'' under today's rule but does not meet DOE standards. Moreover, to the extent transformers that do fall within the exclusions begin to be marketed for standard distribution applications, or find widespread use in such applications, DOE will examine whether re-defining the relevant exclusions, and/or legislative action, is warranted.

b. Testing Transformers

EPCA, and DOE's recent rule, also exclude a ''testing transformer'' from the definition of distribution transformer, 42 U.S.C. 6291(35)(B)(ii) and 70 FR 60416, as does section 431.192 of today's rule. The Department proposed this exclusion in the SNOPR. 63 FR 63363; 69 FR 45510. No stakeholder commented on it, in response to either the NOPR or SNOPR, except that in its revised TP 2–2005 document, NEMA deleted the following sentence from the SNOPR's proposed definition of ''testing transformer'': ''This type of transformer is also commonly known as an Instrument Transformer.'' (NEMA, No. 60 Attachment 1 at p. 7) An instrument transformer, however, is a type of transformer used for extending the voltage and current ranges of measuring and control instruments—such as voltmeters, ammeters, wattmeters, and relays—and is not the same as a testing transformer that supplies power to test electrical equipment. The Department recognizes that it erroneously included this sentence in the SNOPR definition of testing transformer and has deleted it from today's rule.

The Department believes that this error would not have lead stakeholders to infer that DOE had proposed to specifically exclude instrument transformers from the definition of ''distribution transformer'' in the SNOPR, for two reasons. First, the remainder of the proposed definition of testing transformer clearly did not include instrument transformers, and second, contrary to the incorrect sentence, testing transformers are not commonly known as instrument transformers. Nevertheless, to the extent the proposed rule may have been read to specifically exclude instrument transformers, DOE believes such an exclusion is unnecessary and unwarranted. The revised NEMA TP 2–2005 contains no such exclusion. Moreover, an instrument transformer would be designed to handle less power than the lower capacity limits (10 kVA for liquid-immersed and 15 kVA for dry-type) in today's definition of distribution transformer, unless it was also designed to distribute electricity. In the former case, the transformer would not be covered under today's rule (or under the SNOPR) even absent a specific exclusion, rendering an exclusion unnecessary. In the latter case, it *should* be covered, and subject to DOE efficiency standards and test procedures, as a ''distribution transformer.'' Hence, there is no reason to consider further the exclusion of ''instrument transformers'' from today's definition of distribution transformer.

c. Grounding Transformers

Finally, section 431.192 of today's final rule contains a clarifying modification to the SNOPR's definition of ''grounding transformer.'' That definition referred to ''[a]n autotransformer with a zig-zag winding arrangement.'' 69 FR 45521. The Department has since become aware that this language is internally inconsistent, because an autotransformer with a zig-zag winding cannot be an autotransformer as defined in the rule, nor does it meet industry's conventional understanding of the term. The Department used the term autotransformer in the proposed grounding transformer definition to describe a type of transformer that does not have a separate physical secondary winding (unlike a conventional transformer). But although a three-phase autotransformer has three coils constituting the primary winding only, and no separate secondary winding, a section of each primary coil is ''tapped-off'' to create, in effect, a secondary winding. A grounding transformer, however, has only a primary winding, and no secondary winding output. In today's rule, in the definition of ''grounding transformer,'' the Department has replaced the reference to an autotransformer with a reference to a transformer with a primary winding and no secondary winding.

4. Other Exclusions Considered

The bulk of the comments on the SNOPR's definition of distribution transformer advocated eliminating or narrowing exclusions DOE had proposed, or adding other exclusions. EPACT 2005 incorporated none of these exclusions into EPCA.

In the SNOPR, DOE had proposed to exclude both harmonic mitigating transformers and K-factor (also referred to as ''harmonic tolerating'') transformers at K–13 and higher, largely based on its view that: (1) regulating them would not save significant amounts of energy, and (2) they are sufficiently expensive that there is little risk they would be purchased in place of more efficient transformers that would be subject to standards. 69 FR 45511, 45520–21. The Department also indicated its belief that few harmonic mitigating transformers would be commonly understood to be distribution transformers. 69 FR 45511. No commenter advocated retention of either exclusion, and several supported eliminating or narrowing them.

Supporting elimination of both exclusions, NEMA stated that the exclusions could be used to avoid efficiency standards. (NEMA, No. 39 at p. 2 and No. 47 at p. 2; Public Meeting Transcript, No. 42.11 at p. 22; NEMA No. 51 at p. 2) The Oregon Department of Energy raised doubts that these transformers would be unable to meet standards and saw no rationale for excluding them. (ODOE, No. 54 at p. 2) Harmonics Limited believes the market for them is large and growing, that use of K-rated transformers to circumvent existing standards has resulted in greater energy consumption, and harmonic transformers can both comply with standards and address harmonics issues. (Harmonics Limited, No. 50 at p. 1) ACME and Pemco advocated elimination of the exclusion for K-factor transformers (Public Meeting Transcript, No. 42.11 at pp. 32–33; Pemco, No. 48 at p. 2), and EMS International Consulting, Inc. (EMS) advocated elimination of the exclusion for harmonic mitigating transformers. (EMS, No. 57 at p. 3) In addition, EMS recommended that DOE cover K-rated transformers (up to a certain level which EMS did not specify), and Federal Pacific recommended narrowing the K-factor exclusion for transformers rated up to 300 kVA and broadening it for transformers above 300 kVA, both on grounds similar to those advanced by commenters who advocated its elimination. (EMS, No. 57 at p. 2; FPT, No. 44 at pp. 2–3 and No. 52 at p. 2)

Based on these comments, and upon further review, DOE has concluded there is not a sufficient basis at this point to exclude harmonic mitigating or K-factor transformers from the definition of distribution transformer. In essence, the Department proposed in the SNOPR to exclude these transformers on the grounds that they are not ''distribution transformers,'' and that energy conservation standards for them would fail to meet the EPCA criteria in 42 U.S.C. 6317(a)(1) because such standards would not save substantial amounts of energy and/or be economically justified. Concerning the first point, as discussed above, EPCA, as amended in EPACT 2005, now defines the term ''distribution transformer.'' Harmonic mitigating and K-factor transformers do not *per se* fail to meet the numerical criteria in this definition, nor are they in the definition's list of excluded transformers. (42 U.S.C. 6291(35)(A) and (B)(i)–(ii))

EPCA, as recently amended, now authorizes DOE, however, to exclude by rule any transformer if it is designed for a special application, if it is unlikely to be used in a general purpose application, and if significant energy savings would not result from applying standards to it. (42 U.S.C. 6291(35)(B)(iii)) DOE previously relied on general information to support the views expressed in the SNOPR that harmonic mitigating and K-factor transformers would not be used for general purpose distribution applications, and that standards for them would not save significant amounts of energy. However, these conclusions were somewhat negated by the comments that these transformers could be sold in place of distribution transformers that are subject to standards, and that their use is increasingly common. Also, the Department is not aware of any more concrete information or analyses that address whether standards for these transformers could save energy. Thus, the Department now has no basis for excluding them under the new criteria in section 42 U.S.C. 6291(35)(B)(iii). For these reasons, DOE cannot conclude at this point that harmonic mitigating or K-factor transformers fail to meet the new EPCA definition of ''distribution transformer.''

Concerning the issue of whether these transformers should be excluded from DOE's definition of distribution transformer on the ground that energy conservation standards for them would not meet the criteria in 42 U.S.C. 6317(a)(1), as just set forth, there is insufficient basis to conclude that such standards would fail to save substantial amounts of energy. Furthermore, comments that harmonic mitigating and K-factor transformers could be manufactured to be in compliance with applicable efficiency standards without excessive cost suggest that standards for this equipment might well be economically justified. As with the issue of potential energy savings, the Department is not aware of any concrete information or analyses that suggest that standards for K-factor and harmonic mitigating transformers are not economically justified. Thus, the Department believes there is insufficient basis to conclude at this point that standards for these transformers would fail to meet the criteria in 42 U.S.C. 6317(a)(1).

Some commenters suggest adding other exclusions to the definition of distribution transformer. Federal Pacific recommends that mining transformers (transformers installed inside a mine, inside equipment operated in a mine, or as a component of underground-digging or tunneling machinery) be excluded from the application of standards, because of their radically different loss characteristics and special dimensional constraints. (FPT, No. 52 at p. 2) Aligning with that comment, NEMA excludes mining transformers from its revised test procedure, TP 2–2005. (NEMA, No. 60, Attachment 1 at p. 1 and p. 4) Pemco asserts the need for an exclusion for transformers subject to dimensional, physical or design constraints, such as height limits, low temperature rise, special sound level requirements, weight limits, and suitability for high altitudes, which, according to Pemco, render it physically impossible or cost-prohibitive for these transformers to meet an efficiency standard. (Pemco, No. 48 at p. 1) Pemco also states that an exclusion is needed for retrofit transformers that have to be exactly the same as the ones they are replacing. (Pemco, No. 48 at p. 1–2) Similarly, Howard Industries advocates an exclusion for retrofit transformers, particularly underground and subway style transformers, on the grounds that they are subject to severe physical or electrical constraints, and would be unable to also meet energy conservation standards. (Public Meeting Transcript, No. 42.11 at p. 36; Howard, No. 55 at p. 3) However, although NEMA views the lack of an exclusion for retrofit transformers as problematic, it did not advocate such an exclusion because it has not formulated a definition or solution for this problem. (Public Meeting Transcript, No. 42.11 at p. 35)

In the SNOPR, DOE did not propose to exclude any of the foregoing types of transformers from its proposed definition of distribution transformer. And as with K-factor and harmonic mitigating transformers, EPCA excludes none of them from its definition of distribution transformer. (42 U.S.C. 6291(35)(A) and (B)(i)-(ii)) Furthermore, the commenters who supported these additional exclusions have provided neither data as to the energy savings potential of standards for these transformers, nor information as to the likelihood they could be used in general purpose applications, and the Department is not aware of any concrete information or analyses that address these points. Therefore, the Department has no basis for excluding any of the transformers discussed in this paragraph under section 321(35)(B)(iii) of EPCA. (42 U.S.C. 6291(35)(B)(iii)) As to whether these transformers satisfy the criteria in 42 U.S.C. 6317(a)(1) for adopting test procedures and standards, the commenters have provided broad claims, but no technical or factual evidence, that addresses this issue.

For these reasons, the Department has concluded that there is not a sufficient basis at this point to exclude harmonic mitigating or K-factor transformers, or

transformers subject to dimensional, physical or design constraints (including mining transformers), from today's definition of distribution transformer, and the definition does not exclude them.

Rather, DOE will revisit the issues of whether, and to what extent, these transformers should be subject to standards, and at what levels, during the standards rulemaking for distribution transformers. As set forth in the Determination notice, the Department can best address issues as to the technological feasibility, economic justification and potential energy savings of energy conservation standards in the standards rulemaking, particularly during evaluation of proposed standard levels. 62 FR 54810. For many products, such as the types of distribution transformers at issue here, the question of whether standards are warranted cannot adequately be addressed without detailed information and analysis. Once the Department has decided to propose additional standard levels for distribution transformers, and has provided its analysis of the levels it has considered in depth, stakeholders will have an opportunity to comment. They can provide factual information and analysis on issues such as whether the proposed standard levels, or other levels, are warranted for particular classes of transformers, including the types just discussed. These comments could also address whether some types of transformers should be completely or partially excluded from standards, including, for example, whether a portion of K-factor transformers should be excluded as advocated by Federal Pacific. To the extent information developed during the standards rulemaking warrants exclusion of any type of transformers from coverage of the new standards (and test procedures), the Department will modify its definition of ''distribution transformer'' accordingly.

5. Rebuilt or Refurbished Distribution Transformers

The Department did not specifically address in the SNOPR whether today's test procedure, as well as efficiency standards for distribution transformers, would apply to rebuilt distribution transformers (*i.e.,* units on which one or more windings have been replaced), or to used or repaired distribution transformers. Nor does EPCA specifically address this question. Several commenters stated that the requirements should apply to rebuilt transformers, commonly referred to also as refurbished transformers. EMS and HVOLT stated that coverage of rebuilt units is necessary to close a potential loophole (EMS, No. 57 at p. 3; HVOLT, No. 53 at p. 3), and ERMCO stated that failure to cover rebuilt units might enable end-users to avoid standards by always rewinding failed units. (ERMCO, No. 49 at p. 2) Manufacturers appeared to be concerned that the increased cost of new, standards-compliant transformers would cause some customers to either purchase rebuilt, instead of new, transformers or rebuild existing transformers they already own. The Oregon Department of Energy agreed that rebuilt transformers should be required to meet new standards, indicating that high-quality rewinding practices can produce products that would meet standards while poor quality work can seriously degrade performance. (ODOE, No. 54 at p. 2) Some commenters also advocated coverage of used and/or repaired distribution transformers. (Howard, No. 55 at p. 3; EMS, No. 57 at p. 3)

EPCA, in essence, seems to require only new distribution transformers, that have not been sold to end users, to meet Federal efficiency requirements. (42 U.S.C. 6302, 6316(a) and 6317(a)(1)) Thus, DOE probably lacks authority to require that used and repaired transformers comply with its test procedures and standards. The same may be true for rebuilt transformers, although for them a genuine issue does exist as to DOE's authority. Generally, EPCA provides that products, when ''manufactured,'' are subject to efficiency standards. (42 U.S.C. 6295(b)–(i) and 6313) It is arguable, but by no means clear, that rebuilt transformers could be considered to be ''manufactured'' again when they are rebuilt, and therefore be classified as new distribution transformers subject to DOE test procedures and standards. If, however, rebuilt products cannot be classified as newly manufactured, DOE would be subject to the same limitation on its authority to regulate them as applies to used and repaired products. In addition, contrary to the suggestion of some commenters that DOE regulate the efficiency of distribution transformers that their owners have re-wound, and where the transformer is not re-sold, EPCA provides authority to regulate only products that are sold, imported or otherwise placed in commerce. (42 U.S.C. 6291, 6311, and 6317(f)(1))

Throughout the history of its appliance efficiency program, DOE has not sought to regulate used units that have been re-conditioned or rebuilt, or have undergone major repairs. Regulating this part of the market, including the enforcement of efficiency requirements, could be an exceedingly complex and burdensome task. By and large, the Department believes EPCA indicates a Congressional intent that DOE focus on the market for new products, and believes that this is where the largest energy savings can be achieved. For distribution transformers in particular, the Department understands that at present rebuilt transformers are only a small part of the market. Moreover, the core dimensions of existing units are fixed, whereas for many newly manufactured transformers the dimensions of existing models could be enlarged in order to allow their efficiencies to increase. Therefore, at least initially, any standard for rebuilt transformers would likely have to be lower than for comparable newly manufactured units, and given the current size of the refurbished transformer market, it appears that significant energy savings could not be achieved by adopting standards for them.

For all of these reasons, the Department does not intend to apply its standards and test procedures to used, repaired and rebuilt distribution transformers. Nevertheless, the Department recognizes that there may be some validity to the concerns raised by commenters about possible substitution of rebuilt for new transformers. If conditions change—for example, if rebuilt transformers become a larger segment of the transformer market—DOE will reconsider its decision not to subject them to energy conservation requirements.

6. Coverage of Liquid-Filled Transformers

Finally, Howard Industries suggested, with regard to liquid-filled transformers, that the utility, municipal, and co-op segment of the market not be subject to mandatory standards, because it already uses life-cycle cost methods in purchasing products, and that only the commercial and industrial segment be subject to such standards. (Howard, No. 55 at p. 4) This is an interesting suggestion, but the Department believes it is untenable because the distribution transformers used in these two market segments are not sufficiently different from one another. If the Department were to adopt efficiency requirements for transformers currently sold in one sector but not the other, DOE believes that the transformers it left unregulated would promptly find their way into the regulated market. The Department is charged with prescribing test procedures and energy conservation standards for those distribution transformers for which it determines standards are technologically feasible

and economically justified and would result in significant energy savings. Liquid-immersed distribution transformers sold into the utility, municipal and co-op segments of the market are ''distribution transformers'' as defined in section 321(35) of EPCA, and, because they clearly are designed for general purpose applications, DOE could not exclude them under paragraph (B)(iii) of that section. (42 U.S.C. 6291(35)) Moreover, in October 1997, the Department made a determination that energy conservation standards for liquid-immersed distribution transformers would appear to be technologically feasible and economically justified, and to result in significant energy savings. 62 FR 54816. For these reasons, today's definition of ''distribution transformer'' does not exclude liquid-immersed transformers, nor any subset of these transformers destined for any particular end-user or market segment.

C. Test Procedure for Distribution Transformers

1. General Discussion

The Department developed the test method in today's final rule (Appendix A to Subpart K of Part 431) in order to have a single, primary reference that would clearly set forth all testing requirements for distribution transformers that may be covered by EPCA energy conservation standards. Almost in its entirety, the test method closely follows NEMA TP 2–1998 and the following four widely used IEEE standards: (1) IEEE C57.12.90–1999, ''IEEE Standard Test Code for Liquid-Immersed Distribution, Power and Regulating Transformers and IEEE Guide for Short Circuit Testing of Distribution and Power Transformers,'' (2) IEEE C57.12.91–2001, ''IEEE Standard Test Code for Dry-Type Distribution and Power Transformers,'' (3) IEEE C57.12.00–2000, ''IEEE Standard General Requirements for Liquid-Immersed Distribution, Power and Regulating Transformers,'' and (4) IEEE C57.12.01–1998, ''IEEE Standard General Requirements for Dry-Type Distribution and Power Transformers Including those with Solid Cast and/or Resin Encapsulated Windings.''

As discussed in the SNOPR, the DOE did not propose to adopt NEMA TP 2–1998 verbatim as the DOE test method because of concerns about whether TP 2–1998 was sufficiently clear, detailed and accurate to serve as the DOE test procedure. 69 FR 45508–09. The Department had also identified problems with the clarity and level of detail in TP 2–1998 in the 1998 proposed rule. 63 FR 63362. Nor did the Department propose to incorporate the four IEEE standards by reference. As stated in the SNOPR, that would require users to consult several reference documents in order to construct the test procedure, whereas having a single reference test procedure would reduce the potential of misinterpreting testing requirements and would enhance the convenience to users. In addition the IEEE standards include test methods not only for distribution transformers, but also for much larger power transformers that are not covered by the DOE test procedure. Nevertheless, the Department relied heavily on techniques and methods from NEMA TP 2–1998 and the four IEEE standards in developing the proposed test procedure and today's final test procedure.

EPACT 2005, which the President signed into law on August 8, 2005, amended EPCA in effect to direct the Department to develop a test procedure for distribution transformers that is ''based on'' NEMA TP 2–1998. (42 U.S.C. 6293(b)(10)). In the SNOPR, DOE stated that it had ''adapted virtually all of the provisions of the [proposed] test procedure from NEMA TP 2[–1998] and the * * * four widely used IEEE standards'' just cited, and had used NEMA TP 2–1998 to develop the proposed test procedure. 69 FR 45508. The Department did not receive any comments from stakeholders indicating that they took issue with these statements. As stated above, today's testing methods are largely the same as those proposed in the SNOPR. Thus, as also set forth above, NEMA TP 2–1998 and the IEEE standards are the bases for these test methods. Indeed, because NEMA TP 2–1998 is based on the IEEE standards, and represents an attempt to incorporate them into a single document, any test method that incorporates the substance of these standards would conform to TP 2–1998. Furthermore, today's test methods and those in NEMA TP 2–1998 are entirely consistent with one another. For all of these reasons, it can be fairly stated that today's test procedure is ''based on'' NEMA TP 2–1998, within the meaning of 42 U.S.C. 6293(b)(10), and satisfies the Congressional intent that the DOE test procedure reflect the content of TP 2.[6]

In response to the SNOPR, several commenters requested that DOE rely on existing testing standards as much as possible, as it does for other products, instead of adopting a new stand-alone test procedure. (FPT, No. 44 at p. 7; Public Meeting Transcript, No. 42.11 at pp. 49, 54–55) NEMA expressed concern that the Department's proposal differed significantly from the existing testing methods (NEMA TP 2–1998 and IEEE), and asserted that industry engineers would need to become experts in the new method, and that this could be a difficult, time consuming process. (Public Meeting Transcript, No. 42.11 at pp. 49–51, 53, 60) The Department recognizes that there will be some burden on manufacturers resulting from today's stand-alone test procedure. This burden, however, should be minimal. The test methods in the DOE test procedure are virtually identical to those in the TP 2–1998 and IEEE standards, and require the same steps for determining losses and calculating efficiency. Comments from stakeholders offered no specifics as to why use of the DOE test procedure would be burdensome for manufacturers and identified no specific provisions in DOE's proposed test procedure that deviate from the TP 2–1998 or IEEE standards. Furthermore, in NEMA's revised TP 2 document, TP 2–2005, the test method closely parallels the SNOPR rule language. (NEMA, No. 60, Attachment 1) This indicates that, upon further reflection, NEMA believes use of DOE's proposed test procedure would not be burdensome for manufacturers.

Federal Pacific states that manufacturers will still be required to reference industry standards, in addition to DOE standards. (FPT, No. 44 at p. 6) The Department believes that due to the similarities between today's test procedure and the TP 2–1998 and IEEE documents, a manufacturer following the DOE test procedure would also be consistent with NEMA TP 2–1998 and the IEEE test procedures.

[6] Although NEMA TP 2–1998 contains a sampling plan for establishing compliance with prescribed efficiency levels, the compliance sampling plan in today's rule, which is discussed in section II–E below, is not based on the plan in TP 2. EPACT 2005 mandates that the Department use 12 industry or voluntary test procedures, each for a different type of product, as the basis for DOE test procedures for those products. All contain test methods, but NEMA TP 2–1998 appears to be the only one that contains a sampling plan. Moreover, for the reasons explained in the SNOPR, that sampling plan is inconsistent with the standards and labeling requirements in EPCA for distribution transformers, and with basic, long-standing elements of DOE's appliance efficiency program. 69 FR 45514. Congress gave no indication in enacting EPACT 2005 that it intended its mandate for use of NEMA TP 2–1998 to change EPCA's standards and labeling requirements, or the structure of DOE's program, for this product. For these reasons, DOE believes Congress intended to require that DOE's test methods for distribution transformers, but not its compliance sampling plan, be based on NEMA TP 2–1998. Accordingly, the Department construes 42 U.S.C. 6393(b)(10) as not affecting the content of its compliance sampling plan for distribution transformers.

Therefore, manufacturers would not have to take separate steps to assure compliance with each test procedure.

Federal Pacific also asserts that a stand-alone DOE test procedure may become a problem if IEEE, ANSI, or NEMA adopt changes to their standards because the changes may have to be incorporated into the DOE test procedure. (FPT, No. 44 at pp. 6–7) This issue is not unique to transformers, and exists whether DOE has a stand-alone test procedure or incorporates by reference one or more industry standards, such as the IEEE test methods for transformers. The Department regulates many other consumer products and commercial equipment, all of which have test procedures. Some of these are DOE-developed, stand-alone test methods, and others incorporate by reference industry standards. Even in the latter situations, no change to an industry standard becomes part of the DOE test procedure unless and until the Department adopts it. In the event of an industry-consensus revision to the test methods for distribution transformers, the Department would consider all petitions from manufacturers seeking to incorporate those changes into today's test procedure.

In sum, the Department continues to believe that having a single, reference test procedure document would enhance the convenience to users and reduce the potential for misinterpretation of testing requirements. Today's final rule adheres to that approach rather than incorporating provisions from the existing industry test procedures.

Commenters did not disagree with the Department's decision not to adopt NEMA TP 2–1998, without modification, as the DOE test procedure. In written comments and during the SNOPR public workshop meeting, however, NEMA proposed that DOE, NEMA and other stakeholders work together to reach a consensus on needed revisions of TP 2, so that NEMA could revise it and DOE could then incorporate it by reference. (NEMA, No. 39 at p. 1; Public Meeting Transcript, No. 42.11 at pp. 22, 49–51, 53, 56–57) NEMA has now completed its revision of TP 2, informing DOE that it obtained approval from its membership and adopted TP 2–2005 on September 19, 2005. (NEMA did not indicate whether other stakeholders were involved in this process.) NEMA proposes that DOE adopt the TP 2–2005 document as its test procedure for distribution transformers, and reference it in the final rule for such test procedures. (NEMA, No. 60 at p.1)

The Department believes that such action would be inappropriate. The Department recognizes NEMA's efforts to revise TP 2 and appreciates NEMA's openness, including its submission of a draft TP 2–200X document in March 2005 (NEMA, No. 59 Attachment 1) and the final TP 2–2005 document in September 2005 (NEMA, No. 60 Attachment 1). These submissions have made a definite contribution to this proceeding. As indicated elsewhere in this preamble, these submissions identified changes that were needed in the proposed rule, and that DOE has adopted in today's final rule. These changes include modification of the definition of load loss and several editorial changes. As also discussed in this preamble, however, stakeholder comments submitted in response to the SNOPR, as well as DOE's own review, have resulted in many other changes that clarify and improve the proposed test procedure. These additional changes include provisions for testing harmonic transformers, clarification of the language concerning test set neutrals, and an alternative to the proposed method for providing short-circuiting conductors. None of the additional changes are reflected in NEMA's final TP 2–2005 document. Moreover, TP 2–2005 contains a number of changes from the SNOPR that should not be included in today's final rule, such as the exclusion of mining transformers. For these reasons, the Department is not incorporating TP 2–2005 as its test procedure rule for distribution transformers. That said, in the future, the Department would consider incorporating verbatim the NEMA test method in TP 2 so long as its substance conforms with the test method then in effect.

2. Specific Provisions of the Test Procedure

a. Testing Harmonic Transformers

As discussed earlier in this notice, the Department proposed in the SNOPR to exclude both harmonic tolerating (K-factor) transformers with a K-factor of K–13 or greater and harmonic mitigating transformers from the definition of distribution transformer, but today's definition includes both of these types of transformers. Several stakeholders who recommended removal of the exemption for these transformers, also recommended that the test procedure should require testing using a linear load profile (K=1), namely, using the fundamental-frequency test current in the measurement of load loss. (NEMA, No. 47 at p. 1; NEMA, No 51 at p. 1; HVOLT, No. 53 at pp. 2–3; PQI, No. 56 at p. 3) Federal Pacific stated that absent an industry standard harmonic load profile, K=1 is the only available method for consistently testing transformers designed for harmonic currents. (Public Meeting Transcript, No. 42.11 at pp. 33–34) Federal Pacific also commented that it uses K=1 to test K-factor transformers when a customer specifies a K-factor transformer but also wants it to meet TP 1 efficiency levels. (FPT, No. 44 at p. 2) When a harmonic transformer is tested with a linear load, however, its measured losses are lower than the losses it would experience under non-linear loads. Therefore, the efficiency rating that results from testing the transformer with a linear load will be higher than the actual efficiency of the harmonic transformer during normal operation (*i.e.,* when the transformer is subject to non-linear loads). Nevertheless, as one commenter indicated, testing harmonic transformers at linear loads does offer a straight-forward testing method that avoids over-complicating the issue. (FPT, No. 44 at p. 3, and No. 52 at p. 2) The Department believes that if its efficiency standards become applicable to K-factor and harmonic mitigating transformers, more efficient harmonic transformers will be manufactured than if the standard did not apply to them. DOE agrees with the above comments, and therefore today's final rule, in Section 4.1 of the test procedure, requires that manufacturers test these transformers using fundamental-frequency test current (corresponding to a linear (K=1)) load.

b. Determining Winding Temperatures

Today's test procedure expands the options available to manufacturers for determining the winding temperature of liquid immersed transformers. IEEE C.57.12.90–1999 provides that the temperature of windings of a liquid-immersed transformer is assumed to be the same as the temperature of the liquid in which the windings are immersed. Adding specificity to this approach, the Department proposed in the SNOPR that the winding temperature of a liquid-immersed distribution transformer would be the average of two temperature sensing devices applied to the outside of the transformer tank, at top oil level and at the bottom of the tank. Howard Industries questioned the accuracy of this method for determining winding temperatures, and recommended instead that DOE require direct (internal) top and bottom measurement of the liquid temperature to determine winding temperature. (Howard, No. 45 at p. 1)

The Department understands that the most common method in the distribution transformer industry for estimating the temperature of liquid immersed windings is by using thermocouples attached to the exterior of the transformer tank, as proposed in the SNOPR. Furthermore, as also proposed in the SNOPR, today's rule requires that winding temperature be measured only after certain conditions have stabilized, which provides greater assurance that these external measurements are a good estimate of the winding temperature. For these reasons, DOE believes Howard's recommendation that DOE *require* direct top and bottom measurement of the liquid could impose significant and unnecessary burdens on manufacturers. Nevertheless, the Department recognizes that such direct measurements would be at least as accurate as external measurements, and that testers who prefer to make direct measurements should be allowed to do so. Therefore, today's final rule allows manufacturers to determine the winding temperature using either exterior tank measurements or direct liquid measurements.

The Department understands that testers normally make external tank temperature measurements using thermocouples that are designed to be thermally insulated from the surrounding environment. The use of insulated thermocouples reduces error in the temperature measurement, and offers greater accuracy in determining the winding temperatures. Therefore, the Department has modified the language in proposed section 3.2.1 to clarify that these external temperature measurements must involve the use of insulated thermocouples.

In addition, proposed section 3.2.1 would give manufacturers the choice of waiting to measure winding temperature until either (a) the windings have been under insulating liquid with no excitation and no current in the windings for four hours before the direct current (dc) resistance is measured; or (b) the temperature of the insulating liquid has stabilized, and the difference between the top and bottom temperature does not exceed 5 °C. These conditions each provide assurance that the temperature of the windings has stabilized when manufacturers measure it. The Department took these two conditions from IEEE C57.12.90–1999, which requires that *both* be met when the tester measures the winding temperature. Howard Industries commented that the DOE test procedure should also require that both be met, to be consistent with the IEEE standard. (Howard, No. 45 at p. 2) The Department recognizes the value of being consistent with IEEE. However, the Department does not believe that for distribution transformers, meeting both conditions is necessary. The IEEE standard encompasses kVA ratings of transformers that are much larger (up to 500,000 kVA and larger) than those covered by today's final rule (no larger than 2,500 kVA). The Department believes that for distribution transformers, which are relatively small compared to many of the kVA ratings addressed by IEEE, manufacturers can achieve accurate winding temperature readings if one of these two conditions is met. Therefore, the language in today's final rule does not require that both conditions be met.

The Department has also made some clarifying and editorial changes to the language of section 3.2.2 in today's rule, which concerns determination of the winding temperature of dry-type transformers. Section 5.2 of IEEE C57.12.91–2001 allows for the determination of such winding temperatures, for both ventilated and sealed units, through either direct measurement or use of the ambient temperature of the test area. The IEEE standard permits the latter, however, only under certain conditions. The Department intended to incorporate the IEEE approach in section 3.2.2 of the test procedure in the SNOPR, but that language appeared instead to permit use of the ambient temperature only in determining the winding temperatures of sealed units, and to apply the conditions for use of ambient temperature also to use of direct measurement. Section 3.2.2 of today's final rule contains revised language that clearly incorporates the IEEE approach.

c. Test Set Neutrals

Part 4.0 of the proposed test procedure set forth provisions for determining transformer losses, including requirements for the test circuits and test sets used during testing. Section 4.3.3 of the SNOPR required use of a ''four-wire, three-wattmeter test circuit,'' and, for delta-wound transformers, use of ''a neutral deriving transformer * * * to obtain neutral and ground.'' Commenting on this section, Howard Industries stated that ''[t]here are options for the design of the power source used to test distribution transformers,'' and recommended adding to this section the phrase ''unless the source is WYE connected.'' (Howard, No. 45 at p. 2) Although the Department does not agree with the change Howard recommended, this comment indicates a need to clarify section 4.4.3. A wye-connected power source can be used to test either a wye- or delta-wound transformer, and a neutral deriving transformer is not needed, and rarely if ever used, to obtain a neutral and ground. The Department has added language to today's final rule to make clear that the test procedure allows the use of wye- and delta-wound power source transformers for testing, and only requires use of a neutral deriving transformer in conjunction with a delta-wound transformer.

Today's final rule also contains a few editorial changes with respect to section 4.3.3 of the SNOPR test procedure. First, because the first sentence of that section, as proposed, concerned three-phase distribution transformers generally and not merely test set neutrals, DOE has now moved the language to section 4.3.2. Second, the remaining language of section 4.4.3 in the SNOPR related only to testing of three-phase transformers, and therefore it has been renumbered in today's final rule as section 4.3.2.3 (part of Three-Phase Test Sets). Third, to improve clarity, the term ''grounding transformer'' has replaced the term ''neutral deriving transformer'' throughout the test procedure. This is because ''grounding transformer'' is more widely understood in the distribution transformer community as referring to the type of transformer used to create a grounded neutral for a delta-wound transformer.

d. Losses From Auxiliary Devices

Sections 4.4.3.1 and 4.5.3.1 of the SNOPR test procedure required losses attributable to test instrumentation to be deducted from measured no-load and load losses, respectively, in determining the total losses of a transformer. Commenters suggested that the final rule also require manufacturers, in determining load losses, to exclude those losses attributable to auxiliary devices installed on a distribution transformer but which are separate from the transformer, such as circuit breakers, fuses, and switches, because such losses are not related to losses from the transformer's windings. (Howard, No. 45 at p. 1, and No. 55 at p. 3; ERMCO, No. 49 at pp. 1–2) These commenters raise a valid concern, although today's final rule *permits,* but does not *require,* the deduction or exclusion of auxiliary device losses from the measured load losses.

When a distribution transformer is equipped with auxiliary devices (generally specified by the customer), these devices produce some energy losses, albeit relatively small in comparison to the unit's total losses.

DOE anticipates that its efficiency standards would apply to distribution transformers without regard to whether auxiliary devices are installed. The standards therefore would not govern the efficiency of auxiliary devices, but instead would apply to the performance of the basic transformer (the equipment to which the auxiliary devices are added). Because the Department is concerned that some manufacturers may find it burdensome or problematic to exclude all or part of the losses attributable to auxiliary devices, each manufacturer will have the discretion to include or exclude some or all of the auxiliary-device losses in the determination of load losses. Although exclusion of all such losses would result in a more accurate efficiency rating for the transformer being tested, inclusion of such losses would understate the efficiency rating of the transformer, and not circumvent any applicable standard. The purchaser would be receiving a slightly more efficient piece of equipment than indicated by the rating. This approach is consistent with the Department's regulations in other portions of its appliance standards program, which generally allow manufacturers the discretion to rate their products at efficiencies lower than could be justified by test results. *e.g.*, 10 CFR section 430.24. It is also consistent with the IEEE standards, which set forth test methods for distribution transformers but do not require exclusion of losses from accessories in measuring transformer losses.

Today's final rule also takes this same approach for instrumentation losses. For the reasons just stated, the Department believes DOE's test procedure should permit, but not require, (as proposed in the SNOPR) that manufacturers deduct instrumentation losses from total losses in determining transformer efficiencies. This will allow manufacturers greater flexibility than was provided by the SNOPR proposal, with no detriment to the public or circumvention of any applicable standard.

Therefore, section 4.5.3.1 of today's test procedure allows manufacturers to exclude from measured load losses those losses attributable to auxiliary devices, and sections 4.4.3.1 and 4.5.3.1 allow exclusion of losses attributable to testing instruments from both no-load and load losses. The Department has, however, slightly modified the SNOPR language in proposed sections 4.4.3.1 and 4.5.3.1 that identified the sources of instrumentation losses. The final rule omits the reference to ''ammeter'' because, upon further consideration, DOE now realizes that no measured transformer losses are attributable to this instrument. The Department has also made two other similar modifications. The term ''wattmeter'' is replaced by ''wattmeter voltage circuit'' because a wattmeter experiences losses through both its current and voltage circuits, but only losses from the voltage circuit are part of measured transformer losses. The term ''instrument transformer'' is changed to ''voltage transformer'' because ''instrument transformer'' refers to both current and voltage transformers, both of which experience losses, and it is only losses of the voltage transformer that are part of measured transformer losses and should be deducted from the total measured losses. None of these revisions is a departure from the substance of the SNOPR. Rather they improve the precision of the final rule and reduce the risk of misinterpretation or misapplication of the test procedure.

With respect to how to deduct the losses from auxiliary devices from the measured load losses, one commenter suggested exclusion of the losses from auxiliary devices by removing the devices (Howard, No. 45 at p. 1), and another suggested excluding the losses by deducting them from measured losses. (ERMCO, No. 49 at p. 2) Because the Department believes both approaches are sound, and would produce the same results, today's final rule allows manufacturers the flexibility of using either one.

e. Testing of Multiple Voltage Transformers

Today's final rule also clarifies treatment of dual-or multiple-voltage transformers under the Department's test procedure. Distribution transformers can be designed with multiple voltage ratings on the primary and/or secondary windings. Efficiency testing for these units can be problematic because, for a given transformer and kVA rating, DOE understands that each transformer will have two or more different efficiencies, *i.e.*, one efficiency for each of its winding configurations. In other words, each multiple voltage transformer experiences different losses (and therefore different efficiencies) when operated at different voltages. This difference in losses is due to differences in current associated with the voltage configuration selected, and generally, the lower voltage ratings will have the higher losses and therefore lower efficiency ratings. The Department intends, however, to have just one standard level that would apply to all transformers in a given class, regardless of the voltage or voltages at which each transformer in that class is designed to operate.

Howard Industries commented that the efficiency measurement on series or multiple voltage transformers should always be based on the highest voltage configuration. (Howard, No. 45 at p. 2; Howard, No. 55 at p. 3) The Department is unable to accept this recommendation, because a transformer designed to operate at more than one nominal voltage would have to comply with the standard at all voltage ratings. Because the lowest voltage ratings would generally have the lowest efficiency ratings, to ensure that each multiple voltage transformer complies with the applicable standard at each voltage at which it operates, the manufacturer would have to determine the transformer's efficiency by testing it (or by calculating its efficiency using an AEDM), either at the voltage rating at which the highest losses occur—generally the lowest voltage—or at each voltage at which the transformer operates. Therefore, today's final rule requires the manufacturer to determine the basic model's efficiency either at the voltage at which the highest losses occur or at each voltage at which the transformer is rated to operate.

f. Short-Circuiting Conductor Strap

Section 4.5.2 of the SNOPR stated that in the test for measuring load losses, ''[t]he conductors used to short-circuit the windings must have a cross-sectional area equal to, or greater than, the corresponding transformer leads.'' 69 FR 45530. Howard Industries asserted that other methods exist for providing short-circuiting conductors or their equivalent, and that the test procedure should also permit manufacturers to use any short circuiting conductor that is ''of sufficient size to limit the tare watts to less than 10 percent of the transformer load losses.'' (Howard, No. 45 at p. 2) In industry parlance, ''tare watts'' are losses associated with the test set-up, and in this instance refer to losses in the short-circuiting conductor. The short-circuiting conductor losses incurred during testing are included in the measured load losses for the transformer being tested, but, as discussed above, may be deducted from the measured load losses. The Department's proposed requirement of a cross sectional area equal to, or greater than, the corresponding transformer leads is based on use of a simple, routine method for short-circuiting the windings by means of the shortest practical conductor between the terminals of the transformer. The Department believes this proposed

requirement would limit the short-circuiting conductor losses to approximately one to three percent of the transformer's measured load losses. Howard's recommended revision contemplates allowing a less conventional approach, and would allow losses in the short-circuiting strap to be as much as ten percent of the load losses.

The Department's proposal generally follows the approach taken in the relevant IEEE standards. The IEEE standards are voluntary, however, and do not preclude manufacturers from using new, improved methods that do not strictly adhere to those standards. But incorporating the standards into DOE's test procedure would make them mandatory and limit manufacturer flexibility to use such new methods.

The determination of losses in the short-circuiting strap is subject to errors, which will contribute to the overall error in the determination of transformer losses because manufacturers can deduct the short-circuiting losses from the measured load losses in making their determination of total losses. DOE is concerned that increasing the permissible losses, as proposed by Howard, might also increase the overall error—perhaps beyond acceptable limits—unless appropriate care is exercised to determine the higher losses of the short-circuiting conductor. Today's rule, however, does not permit automatic deduction of 10 percent or any other fixed percent of losses denominated as occurring in the short-circuiting conductor or any other instrument or device. Instead, the rule provides that, in determining measured load losses, manufacturers may deduct only the losses ''attributable'' to the short-circuiting conductor (as well as certain other instruments and devices). Thus, the rule allows deduction only of actual losses, *i.e.*, losses determined with a reasonable degree of accuracy. Moreover, notwithstanding any increase in the amount of error that would be introduced by adoption of Howard's proposal in today's rule, the overall limit on the range of error for measurement of power losses remains at ± 3 percent, as proposed in the SNOPR. Thus, adoption of the proposal would not have a significant effect on overall results determined under the test procedure.

For these reasons, today's rule allows manufacturers to use alternatives to the method specified in proposed section 4.5.2(b) for providing short-circuiting conductors, so long as such alternatives do not result in losses that are 10 percent or more of the total load losses. The language to implement this approach, however, varies slightly from the language proposed by Howard Industries. Howard's proposed language could be construed as permitting losses as great as 10 percent, even if a manufacturer uses the method prescribed in the SNOPR. The Department sees no reason to allow that, and believes losses of that magnitude should be permitted only if a manufacturer uses alternative methods.

g. Revisions Suggested by NEMA in TP 2–2005

As stated above, NEMA prepared a revised version of NEMA TP 2–1998 and submitted it to the Department for review. (NEMA, No. 60 at p. 1) The Department compared this document, designated by NEMA as TP 2–2005 (NEMA, No. 60 Attachment 1), with the rule language proposed in the SNOPR to identify all changes to the SNOPR's methods, procedures and language. For the purposes of this final rule, DOE is treating the differences that it identified as written comments submitted by NEMA on the SNOPR. The following discussion examines the significant differences that DOE has not addressed elsewhere in this notice.

NEMA's TP 2–2005 contains a definition for ''tolerances on measured losses'' which was not provided in the SNOPR and which reads: ''Measured values of electrical power, voltages, currents, resistances, and temperature are used in the calculations of reported data. To ensure sufficient accuracy in the measured and calculated data, the test system accuracy for each measurement shall fall within the limits specified in Table 4.'' (NEMA, No. 60 Attachment 1, p. 8) The Department has not added this definition to the list of terms it is defining in the final rule because it believes such a definition would not further clarify or add substance to the rule. Except for its range for frequency measurement accuracy, Table 2–1 [7] of TP 2–2005 sets forth the same accuracy ranges as are contained in Table 2.1 in the SNOPR. Moreover, section 2.0 of DOE's test procedure states that ''measurement error will be limited to the values shown in Table 2.1.'' 69 FR 45524. The Department believes these accuracy requirements for the measurement of losses are sufficient and clear, and a definition of ''tolerances on measured losses'' is therefore unnecessary.

As just indicated, Table 2–1 of NEMA TP 2–2005 contains an accuracy range for frequency measurement of ± 0.5 percent. (NEMA, No. 60 Attachment 1, p. 9) The Department has decided not to add such a provision to Table 2.1 of today's final rule, however, for the following reasons. First, neither TP 2–1998 nor the widely-used IEEE test methods, which DOE used to develop today's test procedure, contain an accuracy range for frequency measurement. Secondly, except in unusual cases, it is not needed. When power is supplied from the utility grid, frequency is very accurate and there is no need to prescribe a frequency accuracy or require manufacturers to take steps to assure accuracy. The Department would only require manufacturers to assure accuracy when the power supply is not synchronized with an electric utility grid, and this is addressed in sections 4.4.2 and 4.5.2 of the SNOPR. Thus, the Department has not added a frequency accuracy range to Table 2.1.

Compared to the SNOPR, NEMA's TP 2–2005 contains slightly different and longer definitions of ''load'' and ''no-load'' loss. The SNOPR reads that ''[l]oad loss means, for a distribution transformer, those losses incident to a specified load carried by the transformer, including losses in the windings as well as stray losses in the conducting parts of the transformer. It does not include no-load losses.'' NEMA's revised TP 2–2005 reads ''load loss: The load losses of a transformer are those losses incident to the carrying of a specified load by the transformer. Load losses include I^2R loss in the windings due to load and eddy currents; stray losses due to leakage fluxes in the windings, core clamps, and other parts, and the loss due to circulating currents (if any) in parallel windings, or in parallel winding strands.'' (NEMA, No. 60 Attachment 1, p. 4) The Department has not modified its proposed definition of ''load loss,'' except by deleting the last sentence as NEMA did in TP 2–2005. The Department recognizes that inclusion of this last sentence would make the definition inaccurate, because an insignificant amount of no-load loss is included in the measurement of load loss. Also, retention of this sentence might incorrectly imply that manufacturers should subtract this extremely small amount of no-load loss from load-loss measurements, to determine load loss.

However, DOE believes that the remainder of its proposed definition of ''load loss'' is clear and not susceptible

[7] In the March 2005 draft of NEMA TP 2–200X, Table 4, Measurement Accuracy Requirements, was the correct citation. In preparing the final draft, Table 4 was re-labeled as Table 2–1, and all the values remained the same. The language on page 8 of TP 2–2005 makes references to Table 4; however, this appears to be a typographical error as there is no Table 4 in TP 2–2005.

of misunderstanding, and its brevity is preferable to the approach in TP 2–2005. The description of the various components of ''load loss'' in the NEMA definition helps explain the causes of load loss, but neither alters nor clarifies the definition or the requirements that the definition delineates. Such explanation generally is not included in rule language.

Concerning the definition of ''no-load loss,'' the Department's SNOPR reads: ''[n]o-load loss means those losses that are incident to the excitation of the transformer.'' NEMA's revised TP 2 definition reads: ''no-load (excitation) loss: No-load (excitation) losses are those losses that are incident to the excitation of the transformer. No-load (excitation) losses include core loss, dielectric loss, conductor loss in the winding due to excitation current, and conductor loss due to circulating current in parallel windings. These losses change with the excitation voltage.'' Again, the Department considers the SNOPR definition to be clear and complete for the purposes of this test procedure. As with its suggested definition of ''load loss,'' NEMA's definition of ''no-load loss'' adds information, but its list of components is explanatory rather than substantive, and DOE has concerns similar to those discussed for the ''load loss'' definition. For these reasons, the Department is not modifying, except as indicated, either the ''no-load loss'' or the ''load loss'' definitions.

NEMA TP 2–2005 introduces a definition of ambient temperature. (NEMA, No. 60 Attachment 1, p. 3) This definition appears to be derived from the *American Society of Heating, Refrigerating and Air-Conditioning Engineers (ASHRAE) Terminology of Heating, Ventilation, Air Conditioning, & Refrigeration (Second Edition)* and has several elements that apply to types of transformers that are not distribution transformers. Therefore, it is not applicable to the Department's test procedure. Moreover, DOE believes that, in the context of today's final rule, ambient temperature clearly refers to the room temperature in the location where the measurements are being taken, as DOE intends. For these reasons, the Department believes a definition of ambient temperature is unnecessary in today's rule.

Finally, NEMA TP 2–2005 contains a number of editorial changes to the language in the SNOPR's test methods. The Department has incorporated several of these, such as edits in the first paragraph of proposed section 6.1, in today's final rule.

h. Language Corrections as to Conversion of the Resistance Measurement to the Reference Temperature and Conducting the No-Load Loss Test

Section 3.5 of DOE's proposed test procedure provided an equation for correcting measured resistance to the resistance at the reference temperature. 69 FR 45527. One of the terms of this equation, T_k, consists of a temperature level for copper windings, another for aluminum windings, and a third level ''[w]here copper and aluminum windings are employed in the same transformer.'' However, a separate resistance measurement is performed for each winding of a distribution transformer. Section 3.5 provides for adjustment of each such measurement, and each winding will be either copper or aluminum, but not both. Therefore, the equation for adjusting the measured resistance need not, and should not, include a temperature level that contemplates the use of the two metals together, and in today's final rule, the Department has deleted from section 3.5 the language that includes such a temperature level.

Section 4.4.2 of the proposed test procedure concerns testing for no-load losses. Proposed paragraph (b) of that section directed the tester to ''[e]nergize not less than 25 percent'' of either the high voltage or low voltage winding. 69 FR45530. The Department drew the 25 percent figure from section 8.2.3 of IEEE C57.12.90–2001 and C57.12.91–2001, which recommend energizing 100 percent of the winding in conducting this test, but allow as low as 25 percent. The IEEE standards allow the 25 percent because they apply not only to distribution transformers but also to power transformers. Power transformers may require much higher voltages than are available in the power sources used in performing the no-load test. Distribution transformers, however, require much lower voltages, which can be accommodated by the available power sources. Moreover, distribution transformers rarely have a 25-percent voltage tap that would permit energizing a winding at 25 percent of its rated voltage, and DOE understands that instead, in testing distribution transformers for no-load losses, windings are energized to 100 percent of rated voltage. Hence, DOE has deleted from today's final rule the provision allowing testers to energize 25 percent or more of a winding.

Proposed paragraph (c) of section 4.4.2 required certain conditions with respect to voltage during the no-load loss test, ''unless otherwise specified.'' 69 FR 45530. Once again, DOE drew the quoted language from IEEE standards, where it is included to accommodate testing as to characteristics other than efficiency, in situations where a transformer includes special features requested by a customer. Because this language has no application to efficiency testing, and such testing must always be conducted under the conditions specified in proposed paragraph (b), section 4.4.2(c) of today's final rule does not include this language.

D. Basic Model

1. General Discussion

Under the Department's energy conservation program, DOE has applied the ''basic model'' concept to alleviate burden on manufacturers, by reducing the amount of testing they must do to rate the efficiencies of their products. DOE's intent is that a manufacturer would treat each group of its models that have essentially identical energy consumption characteristics as a ''basic model,'' such that the manufacturer would derive the efficiency rating for all models in the group from testing sample units of these models. All of the models in the group would comprise the ''basic model,'' and they would all have the same efficiency rating. The proposed definition of basic model for distribution transformers implements this approach by permitting manufacturers to aggregate models that have the same energy consumption characteristics, but not models with different characteristics. Components of similar design can be substituted in a basic model without requiring additional testing if the represented measures of energy consumption continue to satisfy applicable provisions for sampling and testing.

2. Definition of a Basic Model

In the SNOPR, the Department proposed a definition of ''basic model'' for distribution transformers that included essentially the same criteria as those contained in the definition proposed in the 1998 proposed rule, plus a requirement that the transformers included in the basic model ''not have any differentiating electrical, physical or functional features that affect energy consumption.'' DOE made several other modifications to the definition, and described these changes in the SNOPR. 69 FR 45512–13.

NEMA commented that the SNOPR definition of ''basic model'' was too vague and needed clarification. (Public Meeting Transcript, No. 42.11 at pp. 22–23) Specifically NEMA was concerned

that the phrase added to the end of the basic model definition ''and do not have any differentiating electrical, physical, or functional features that affect energy consumption'' is unclear. (NEMA, No. 39 at p. 2) DOE believes that these general criteria for the creation of basic models are needed to allow manufacturers the flexibility to create basic model groupings that reflect product features that affect energy consumption. To address NEMA's concern, DOE is modifying the definition slightly to provide that voltage and basic impulse insulation level (BIL) rating are both examples of differentiating electrical features that would cause transformer models to be different basic models. DOE stated in the preamble of the SNOPR that each of these features would be a differentiating electrical characteristic, but the proposed definition itself did not include these examples.

Additionally, NEMA noted it would prefer that the rule contain a table of basic models (NEMA, No. 39 at p. 2) or a tighter definition. (Public Meeting Transcript, No. 42.11 at p. 37) DOE believes that creation of a table of basic models would be impractical for several reasons. First, there are literally thousands of possible designs for any one kVA rating and combination of core steel and winding materials. Second, for DOE to attempt to identify both the energy consumption profile of each such combination of transformer features, as well as the combinations that have common profiles, would be an enormous undertaking. Third, to the extent that any significant number of these possible transformer variations is not produced, either now or in the future, effort may be wasted. And fourth, DOE believes that neither it nor industry can accurately anticipate all future design variations of distribution transformers. A table or other rigid definition, therefore, would (1) fail to provide for future designs, and/or (2) conflict with the rationale for using the ''basic model'' construct, and (3) force future designs to be grouped with models that do not share their energy consumption characteristics. As this last point indicates, NEMA's concern that the part of the definition quoted above could allow additional basic models at a later date is misplaced. To the extent that the definition would allow creation of additional basic models that subsume models with new energy consumption characteristics, this indicates the definition is sound rather than in need of alteration.

DOE recognizes that, given the large number of variations in distribution transformer design, many manufacturers produce numerous basic models. The Department is aware, however, of no reasonable way to aggregate models with different energy consumption characteristics, for purposes of testing, that would produce an accurate efficiency rating for each model included in the grouping. Today's final rule, however, will allow manufacturers to rate the efficiency of many of their transformers based on calculations instead of testing, by using alternative efficiency determination methods. This should substantially alleviate any potential testing burden created by a manufacturer's producing large numbers of basic models.

In summary, DOE will slightly modify the proposed definition of ''basic model'' to explicitly provide that (1) voltage and BIL ratings are examples of differentiating electrical features that would cause transformer models to be different basic models, and (2) each basic model would comprise a group of *models* of distribution transformers. Otherwise, the proposed definition is sound because its specific elements and general criteria combine to allow the grouping of models with similar energy consumption characteristics without allowing models with different characteristics to be included in the same group.

E. Manufacturer's Determination of Efficiency

1. General Discussion

During this rulemaking, NEMA advocated DOE adoption of the sampling plan for compliance testing in NEMA TP 2–1998, which would allow manufacturers to demonstrate the compliance of aggregations of basic models, and the Department presented and solicited comment on several alternative approaches for demonstrating such aggregate compliance. For the reasons discussed in the SNOPR, the Department chose not to propose adoption of either the NEMA TP 2–1998 sampling plan or an alternative approach allowing aggregation. 69 FR 45513–15.

Instead, the Department has adopted both a sampling plan for compliance testing, and provisions allowing use of alternative methods (other than actual testing), for manufacturers to use to determine the efficiency of individual basic models of distribution transformers. As proposed in the SNOPR, today's rule requires each manufacturer to determine the efficiency of each of its basic models on a one-time basis by testing, at least five with compliance testing, and by rating each of the remaining basic models either by testing it, or, under the conditions set forth in the rule, by calculating the basic model's efficiency using an alternative efficiency determination method (AEDM). Where the manufacturer uses an AEDM for a basic model, it would not test units of the basic model to determine its efficiency for purposes of establishing compliance with DOE requirements.

2. Sampling Plan

The Department designed the sampling plan in today's final rule to provide a high probability that manufacturers would find each basic model to be in compliance with the efficiency level at which it is manufactured, but without creating a significant probability that models would be found to meet levels higher than those at which they are manufactured. The latter—''false positives''—would in effect create a regulatory loophole, by allowing transformer models manufactured at efficiency levels below applicable standards to be rated as compliant with those standards. The Department's goal for distribution transformers is to have about a 97.5 percent probability that tests on sample units of a basic model would verify or support an efficiency rating for the model that is equal to or less than the average efficiency of all units of that model manufactured. Stated alternatively, a basic model that is manufactured at or above its rated efficiency would have a probability of not less than 97.5 percent of passing the compliance demonstration test—*i.e.,* being found in compliance with its rated value—based on test results using any sample size.

To accomplish this goal, DOE incorporated into its proposed sampling plan a one-sided statistical z-test, with a 97.5 percent confidence limit for average efficiency or power loss, which manufacturers would apply to the test results derived from testing sample units of a basic model. The 97.5 percent confidence limit in the one-sided z-test corresponds to $2\sigma/\sqrt{n}$, where σ represents the standard deviation of units of distribution transformers, and n is the number of units, including one, in the sample. Thus, for example, if a manufacturer tested a sample of only one unit of a basic model, and its measured power loss did not exceed the rated power loss of the basic model by more than the amount representing two standard deviations, the test would confirm the validity of the rated efficiency. By way of further example, if the manufacturer tested a sample of more than one unit, the numerical value for losses corresponding to the 97.5

percent confidence limit would decrease, and the precision of the determination of the average losses for the basic model would increase.

In developing the SNOPR, DOE had information both to support a standard deviation (SD) for distribution transformers of 2.7 percent and to support one of 4 percent. Since the information in support of the 2.7 percent level was slightly stronger, DOE based the confidence limit (or ''tolerance'') [8] in the SNOPR sampling plan on the SD of 2.7 percent. 69 FR 45515. Two SDs of 2.7 percent correspond to a tolerance for the average efficiency of the sample of units tested of 5/√n percent. (Most commenters who commented on the sampling plan tolerance level addressed it as a straight numerical amount, although in actuality the proposed tolerance is a tolerance that depends on the size of the sample of units tested, and is 5/√n percent. The commenters may have used straight numerical amounts because application of the expression 5/√n percent to a sample size of one would always result in a flat five-percent tolerance.)

The Department received several comments stating that its proposed tolerance was too stringent, and should be relaxed. NEMA notes that the Department's equation relating the average efficiency of the sample and the represented efficiency assumes a tighter performance probability distribution function than is achievable in practice, particularly for small manufacturers. (NEMA, No. 47 at p. 3; NEMA, No. 51 at p. 3)

Four commenters requested that the tolerance for individual units be relaxed from the SNOPR proposal of five percent to eight percent. (ERMCO, No. 43 at p. 2; FPT, No. 44 at p. 6; Howard, No. 45 at p. 2; EMS, No. 57 at p. 3) Federal Pacific commented that use of a five-percent tolerance is too stringent given the variability of transformer losses, particularly the variability of no-load losses. (FPT, No. 44 at p. 6) EMS and ERMCO recommend that the tolerance should be eight percent to be consistent with IEEE/ANSI C57.12.00 and NEMA TP 2. (EMS, No. 57 at p. 3; ERMCO, No. 43 at p. 2) Howard Industries also recommended that the minimum acceptable efficiency level calculation be based on an eight-percent tolerance on total loss. (Howard, No. 45 at p. 2)

Four commenters advocated a 12-percent tolerance, which would equate to three SDs of 4 percent. (Cooper, No. 46 at pp. 1–2; HVOLT, No. 53 at pp. 1–2; PQI, No. 56 at pp. 1–2; NEMA, No. 59 at p. 1, NEMA, No. 60, Attachment 1 at p. 34) This tolerance level would increase the compliance demonstration probability to 99.9 percent, but would also allow for a significant probability of false positives. For example, a basic model designed with losses 2 percent above its rated value would have a 99.4-percent probability of being found to have an efficiency at or above its rated level if the sample size is one, and would have a 97-percent probability of being found to have such an efficiency if the sample size is five. In addition, a 12-percent tolerance would be inconsistent with the much smaller tolerance, for rejection of single units, in existing IEEE standards. For these reasons, the Department is not incorporating the 12-percent tolerance level into its sampling plan.

Three of the commenters advocating the 12-percent tolerance for compliance testing based their position in part on the assertion that DOE's rule for electric motors allows a 20-percent ''test tolerance band.'' (Cooper, No. 46 at p. 2; HVOLT, No. 53 at p. 2; PQI, No. 56 at p. 2) The tolerance to which they refer in the electric motors rule is not applicable to distribution transformers for two reasons. First, the 20-percent tolerance in the motors rule applies during testing that occurs in enforcement proceedings. The rule uses this tolerance to determine the adequacy of the size of the test sample used in the proceeding, following testing of the initial sample, and determination of the sample's mean, standard deviation, and standard error. This 20-percent tolerance has no relevance to compliance testing. Second, application of a particular tolerance with respect to efficiency and losses for electric motors does not indicate the appropriate tolerance for distribution transformers. Induction motors have a similarity to transformers in that their stator and rotor windings are akin somewhat to the primary and secondary windings of a transformer. However, at that point the similarity ends. A transformer has no moving parts in normal operation whereas a motor's main feature is the spinning of the rotor, a mechanical process which in itself absorbs considerable energy. Thus, motors, in addition to having electrical power losses, also have mechanical losses. Consequently the comparison of motors and transformers when discussing tolerances used in determining efficiency is inappropriate.

Based on the information provided in comments, DOE now believes that 4 percent is the better SD to use, and that the available information supporting the 4 percent figure outweighs that supporting the 2.7-percent SD. Two SDs at 4 percent equates to an eight-percent single unit tolerance, and results in a tolerance for the average efficiency of the sample of units tested of 8/√n percent. Increasing the tolerance from 5/√n percent to 8/√n percent increases the probability of demonstrating compliance of a product manufactured at the applicable standard level from about 89 percent to about 98 percent, without introducing a significant probability that a product manufactured below the standard level would be found in compliance. This assumes that the variability of units of the basic model being tested have a standard deviation of 4 percent. The probability of a significant false positive—finding a model in compliance with its rated efficiency where on average the units of that model as manufactured actually experience a power loss 2-percent larger than the rated loss—is approximately 93 percent for a sample of one unit and 81 percent for a sample of five units. Both probabilities, especially the second one, are sufficiently low that a manufacturer would not risk producing a product with power losses 2 percent or more above the losses at which it seeks to rate the product. Thus, today's final rule increases the tolerance from 5/√n percent to 8/√n percent.

Several manufacturers submitted comments asking that DOE confirm that they have the option of testing all transformers of a basic model or some basic models. (Public Meeting Transcript, No. 42.11 at p. 22; NEMA, No. 39 at p. 2) One stakeholder requested clarification that if it chooses to test 100 percent of its production, it would not have to use the sampling plan or an AEDM (alternative efficiency determination method). (Public Meeting Transcript, No. 42.11 at p. 65) NEMA also requested clarification on the number of samples that would have to be tested if the sample size is small. (Public Meeting Transcript, No. 42.11 at p. 67)

As indicated above, once efficiency standards for distribution transformers have gone into effect, today's rule will require each manufacturer to rate the efficiency of each of its basic models on a one-time basis. The rating would enable the manufacturer to establish that the basic model complies with the applicable standard, and provide the basis for any energy representations

[8] The precise statistics term ''confidence limit'' is frequently replaced in engineering applications by a more general term ''tolerance.'' In the preceding discussion, DOE used the precise term to explain the basis of the tolerance in the SNOPR's proposed sampling plan for compliance testing. The Department will use the term ''tolerance'' in the discussion that follows, particularly because all of those who commented on this issue used this term.

(e.g., labeling and certification) required by DOE. 69 FR 45514. The Department intended in its SNOPR proposal, and wishes to confirm with respect to today's rule, that where a manufacturer arrives at this rating through testing, rather than use of an AEDM, the sampling plan would permit the manufacturer to test 100 percent of the units available for testing. The language of section 431.194(b)(2) of the final rule has been modified to make this clear. Thus, where manufacturers have on hand more than five units of a basic model at the time they do compliance testing to rate the basic model, or produce more than five over a six-month period, they would have the discretion to rate the basic model based on testing either all of the units or a sample of at least five units. In addition, the final rule clearly requires compliance testing of 100 percent of the units for basic models for which a manufacturer produces five or fewer units during a six-month period.

None of the provisions in today's rule would prevent a manufacturer from doing continuous testing of 100 percent of the units it produces in order to meet contractual obligations to report to its customers the losses, efficiency or other energy consumption characteristics of each individual unit it sells to them. Nor does the Department anticipate that provisions it may adopt, for assuring compliance with energy conservation standards and for manufacturer representations (e.g., labeling) as to efficiency, would prevent manufacturers from testing all of their units in order to meet such obligations.

3. Alternative Efficiency Determination Method (AEDM)

Under the proposed rule, a manufacturer would have to validate each AEDM it uses based on test data for at least five basic models, derived by testing at least five units of each of these basic models. 69 FR 45522. Taken together, these provisions would require testing of at least 25 units to validate an AEDM. Howard Industries commented that five basic models is too small a sample to adequately represent all the different kVA/voltages/BIL requirements when validating an AEDM and recommended that DOE require 75 models to be tested to validate an AEDM. (Howard, No. 45 at p. 3, and No. 55 at p. 3) Howard also asserted that five basic models was too low a number to verify that the AEDM would accurately predict the efficiency of all liquid-immersed transformers. It stated that transformers vary considerably, with a large number of design options. (Howard, No. 58 at p. 1) In addition to containing the validation requirement, however, the final rule (in section 431.197(a)(2)(i)) also precludes a manufacturer from applying an AEDM to a basic model unless ''the AEDM has been derived from a mathematical model that represents the electrical characteristics of that basic model.'' Thus, apart from any testing to validate the accuracy of an AEDM, this language will require each AEDM to represent any unique or custom-designed electrical characteristics of any basic model to which it applies. DOE believes that this provision satisfactorily addresses Howard's concern that DOE require AEDMs to reflect the particular characteristics of the transformers to which they apply.

The Department believes that to require each AEDM to be validated based on testing of 75 basic models, or some other number larger than five, would create undue burden. The foregoing is particularly true because DOE understands that manufacturers use design models and software to design their distribution transformers, and DOE believes that most AEDMs would be derived from, or consist of, such models and software. Since these design tools would have validity independent of the AEDM substantiation required by DOE regulations, extensive testing to substantiate the validity of AEDMs appears to be unnecessary.

Section 432.12(a)(2)(iii) of the proposed rule restricted the use of each AEDM to one of the following groups of distribution transformers: low-voltage dry-type transformers, medium-voltage dry-type transformers, and liquid-immersed transformers. 69 FR 45522. Upon further review, the Department believes that this provision is too restrictive, and that manufacturers should be permitted to use a single AEDM for distribution transformers in two or all three of these groups, so long as the manufacturer validates the AEDM separately for each group. The Department is aware of no reason why it should limit use of each AEDM to transformers in one of these groups, if the AEDM can validly predict the efficiency for transformers in more than one group. Accordingly, today's final rule allows a single AEDM to apply to two or all three of these groupings. See 10 CFR section 431.197(a)(2) of the rule. The rule also requires that the manufacturer validate each AEDM separately for each group—*i.e.,* low-voltage dry-type, medium-voltage dry-type, and liquid-immersed—for which it uses the AEDM, based on test data for five basic models from such group. 10 CFR section 431.197(a)(2)(iii) of the rule. Thus to substantiate a single global AEDM that would apply to the entire range of distribution transformers (all three groups), a manufacturer would have to test not fewer than 15 basic models (a total of at least 75 units), and it would have to test at least 10 basic models (a total of at least 50 units) to substantiate an AEDM that would apply to two groups. DOE believes this amount of testing to validate the AEDM is sufficient.

The SNOPR also included a requirement that manufacturers ''periodically'' verify each AEDM that they use. 69 FR 45523. Howard Industries recommended that the Department change ''periodically'' to ''annually.'' (Howard, No. 45 at p. 3, and No. 55 at p. 3) The Department considered this proposal, but decided that annual verification of an AEDM, which could include testing, could be unduly burdensome on manufacturers. The Department has also decided, however, largely because of the particular circumstances of the distribution transformer industry, to eliminate the periodic verification requirement from today's final rule. Many distribution transformer manufacturers already engage in continuous testing—sometimes by testing 100 percent of their units—to assure that the actual performance, including efficiency, of their products conforms to the manufacturer's design software and representations to customers. In addition, other provisions of today's final rule authorize DOE to obtain information from manufacturers concerning their use of AEDMs, and to require a manufacturer to do sample testing or take other steps. Thus, DOE now believes that mandatory, periodic, subsequent verification of AEDMs for distribution transformers is unwarranted.

F. Enforcement Procedures

The SNOPR included proposed enforcement procedures, including a sampling plan and other provisions for enforcement testing. 69 FR 45415–17, 45523–23, 45533–34. The Department based the proposed procedures on enforcement provisions in 10 CFR Part 430, which apply when DOE examines whether a basic model of a covered product complies with efficiency requirements set forth in those parts. The SNOPR's enforcement sampling plan was based on the plan in Part 430, but was developed specifically for distribution transformers. It allows testing of small sample sizes and applies only to energy efficiency testing, whereas the Part 430 plan contemplates

larger sample sizes and covers energy use testing.

NEMA requested clarification on when the process of enforcement commences. (Public Meeting Transcript, No. 42.11 at p. 73) The Department initiates the enforcement process when it receives information, either from a third party or other source, indicating that a manufacturer's units may not be in compliance with the national standard. Initially, DOE seeks to meet with the manufacturer and review its underlying test data as to the models in question. DOE would commence enforcement testing procedures if these steps do not resolve identified compliance issues.

The Department also received comments relating to enforcement as to stock units and imported units. Cooper sought clarification on application of efficiency standards to units in stock when standards take effect, and to foreign manufacturers. (Cooper, No. 46 at p. 2) Traditionally, new DOE standards for a product have applied to units manufactured after a certain date, or, in the case of foreign-manufactured units, imported after that date. See, e.g., 42 U.S.C. 6291, 6295, 6311 and 6313. The Department anticipates that this will also be the case for distribution transformers. Therefore, the efficiency levels would not apply to units in a domestic manufacturer's stock prior to the date standards become applicable, or to units imported prior to that date. In all other respects, DOE anticipates that the same requirements and enforcement provisions that apply to domestic units will also apply to imported units. In addition, however, imported units are subject to the provisions of 42 U.S.C. 6301 of EPCA, concerning importation of products subject to EPCA requirements.

HVOLT commented that the Department should require that the efficiency of any foreign-built transformer be verified by a third party before it can be sold in the U.S. (HVOLT, No. 53 at p. 3) The Department believes that this issue is outside the scope of this rulemaking. Today's final rule does not address the DOE administrative framework for manufacturers to follow to demonstrate compliance with distribution transformer energy conservation standards. The Department will likely address such requirements in conjunction with the standards rulemaking.

The SNOPR enforcement sampling plan contained several calculation equations. 69 FR 45533. Federal Pacific requested further explanation and examples of the enforcement calculations. (FPT, No. 44 at p. 6) As explained in the SNOPR, the statistical methods used in those calculations were based on well-established statistical methods for obtaining a confidence interval on a mean. 69 FR 45516. Hence, the Department believes these calculations can be understood by any statistician. In addition, a complete explanation is set forth in NIST Technical Note 1456, *Operating Characteristics of the Proposed Sampling Plans for Testing Distribution Transformers, May 2004,* which has been placed in the docket for this rulemaking and is publicly available at *http://www.eere.energy.gov/buildings/appliance_standards/commercial/dist_transformers.html.* On the other hand, it would be very burdensome for DOE to develop and include in this notice a detailed explanation, in layman's terms, of the statistics and operation of these equations. Furthermore, these equations will be used by DOE, and would not be applied by manufacturers. For these reasons, the Department has concluded that the type of explanation Federal Pacific requests is unwarranted, and would add little useful information to the record of this rulemaking.

III. Procedural Requirements

A. Review Under Executive Order 12866

The Office of Information and Regulatory Affairs of the Office of Management and Budget (OMB) has determined that today's regulatory action is not a ''significant regulatory action'' under Executive Order 12866, ''Regulatory Planning and Review,'' 58 FR 51735 (October 4, 1993). Accordingly, this action was not subject to review under the Executive Order.

B. Review Under the Regulatory Flexibility Act of 1980

The Regulatory Flexibility Act (5 U.S.C. 601 *et seq.*) requires preparation of an initial regulatory flexibility analysis for any rule that by law must be proposed for public comment, unless the agency certifies that the rule, if promulgated, will not have a significant economic impact on a substantial number of small entities. As required by Executive Order 13272, *Proper Consideration of Small Entities in Agency Rulemaking,* 67 FR 53461 (August 16, 2002), DOE published procedures and policies on February 19, 2003, to ensure that the potential impacts of its rules on small entities are properly considered during the rulemaking process. 68 FR 7990. The Department has made its procedures and policies available on the Office of General Counsel's Web site: *http://www.gc.doe.gov.*

The Department reviewed today's final rule under the provisions of the Regulatory Flexibility Act and the procedures and policies published on February 19, 2003, and certified in the SNOPR that the proposed rule would not impose a significant economic impact on a substantial number of small entities. 69 FR 45517. As indicated in section I-A above, when it issued the SNOPR DOE was concurrently pursuing a rulemaking to develop energy conservation standards for low-voltage dry type, medium-voltage dry type and liquid immersed distribution transformers. The Department explained in the SNOPR that, unless and until DOE adoption of such standards, no entities, small or large, would be required to comply with today's final rule. 69 FR 45517. Once the Department adopted standards, however, the rule would become binding on, and could have an economic impact on, small entities which manufacture the distribution transformers subject to the standards. But the nature and extent of such impact, if any, could not be assessed until the Department has promulgated the standards. The Department stated in the SNOPR that, in light of these circumstances, at an appropriate point in conjunction with the standards rulemaking, it will conduct further review under the Regulatory Flexibility Act. The Department received no comments on this issue in response to the SNOPR.

For medium-voltage dry-type and liquid immersed distribution transformers, DOE is continuing to pursue its standards-development rulemaking and the circumstances described in the SNOPR still exist. Therefore, after considering the potential impact of this final rule on small entities that manufacture these transformers, DOE affirms the certification that this rule will not have a significant economic impact on a substantial number of these small entities.

Low-voltage dry-type distribution transformers, however, are no longer included in DOE's rulemaking on energy conservation standards for distribution transformers. Instead, EPCA, as amended in EPACT 20005, now specifies minimum standards for all such transformers manufactured after January 1, 2007, 42 U.S.C. 6295(y), and the Department has incorporated those standards into its regulations. 10 CFR section 431.196. Because today's rule will apply to all distribution transformers that become subject to standards, as of January 1, 2007, the rule

would become binding on all manufacturers, small and large, of low-voltage dry-type distribution transformers. Consequently, under the Regulatory Flexibility Act, the Department must assess the economic impact of this rule on small manufacturers of these transformers.

Small businesses, as defined by the Small Business Administration (SBA) for the distribution transformer manufacturing industry, are manufacturing enterprises with 750 employees or fewer. The Department estimates that, of a total of approximately 55 manufacturers of low-voltage dry-type distribution transformers, about 45 are small businesses under the SBA definition. In today's rule, the enforcement provisions and the methods manufacturers must use to rate its products could potentially impose burdens on these small manufacturers. But DOE has examined these aspects of the rule and determined that they will not have a significant economic impact on a substantial number of small manufacturers of low-voltage dry-type distribution transformers.

As to the enforcement provisions, they require DOE to first attempt to resolve a transformer's possible non-compliance with EPCA requirements by reviewing available information and meeting with the manufacturer. Then, if necessary, DOE must test sample units of the allegedly non-complying basic model(s) to determine whether they comply. See Section 431.198 of the attached rule. Only provisions that come into play once DOE invokes testing—specifically, manufacturers must provide and ship sample units to DOE and must retain all units in the batch sample until a final determination of compliance or non-compliance, and manufacturers may conduct additional testing at their own expense if the DOE testing indicates non-compliance—could impose a significant burden on manufacturers.

None of the enforcement provisions imposes on-going duties on manufacturers. They apply only when an issue of compliance is raised, which at this point is speculative. Indeed, even when they are invoked as to a particular manufacturer, they will only apply to the specific basic model(s) at issue. Moreover, these types of enforcement provisions have been in place for DOE's program for appliance energy conservation standards for more than 15 years, and the Department has commenced the process at most two or three times a year. In every instance it has resolved the matter without proceeding to enforcement testing, the only part of the process that could impose a significant burden on manufacturers. For all of these reasons the Department concludes that the enforcement provisions in today's rule will not have a significant impact on a substantial number of entities, whether small or large.

As to the methods for manufacturers to rate the efficiencies of low-voltage dry-type distribution transformers, DOE notes initially that requirements for testing and rating these transformers are already implicit in EPCA. Specifically, to comply with EPCA's efficiency standards for low-voltage dry-type distribution transformers, 42 U.S.C. 6295(y), manufacturers will have to determine the efficiencies of any such transformers they produce. This necessarily entails the use of testing and rating methods, and if DOE does not prescribe such methods, manufacturers would still be subject to the burden of using such tools. In addition, as noted above, EPCA requires DOE to prescribe testing requirements for any transformers subject to standards, and states that these requirements ''shall be based on'' NEMA TP 2–1998. 42 U.S.C. 6293(b)(10) and 6317(a). Although these provisions allow the Department substantial discretion in prescribing a test method for distribution transformers, they indicate that EPCA contemplates that the DOE method likely would impose burdens equivalent or similar to those imposed by NEMA TP 2–1998. Thus, today's rule itself has an impact on small manufacturers only to the extent it imposes an incremental burden beyond what they would be required to do to comply with EPCA's standards or NEMA TP 2–1998.

This is significant under the Regulatory Flexibility Act because the Act applies only where the agency's rule has a significant impact on small entities. It does not apply to a rule if the agency certifies that ''*the rule* will not * * * have a significant impact on a substantial number of small entities.'' 5 U.S.C. 605(a) (Emphasis added). Thus, the Act does not apply, for example, where the agency merely incorporates statutory requirements into its rules, or adopts the equivalent of statutory requirements without adding any significant impact on small entities. In such instances, it is the statutory requirements, and not the agency's rule, that could have an impact on small entities. The Department therefore examines in the following paragraphs whether today's rule imposes any burdens on small entities beyond those imposed by EPCA.

In prescribing efficiency rating methods, today's rule (1) addresses the number of its basic models a manufacturer must rate through actual testing and how may units of each it must test, (2) prescribes a detailed method for testing each unit, and (3) provides for use of alternative efficiency determination methods for transformers that manufacturers do not rate through testing. See Section 431.193 and 431.197 of the attached rule. As to whether today's method for testing each unit is more burdensome than NEMA TP 2–1998, the two are nearly identical except that the Department's method adds technical detail, clarifying language, and editorial improvements. Thus, the DOE method is no more burdensome, and may alleviate burden because it reduces the need for manufacturers to do background work to provide missing details and clarify ambiguous provisions.

Nor does today's test method impose significantly, if any, more burden than other methods a small manufacturer might reasonably use to comply with the EPACT standards for low-voltage dry-type transformers. A manufacturer might choose to use NEMA TP 2–1998, which as just indicated is no more burdensome than today's method, or NEMA TP 2–2005, which is almost word-for-word the same as the SNOPR's test method and which varies little from today's rule. A manufacturer might also craft a test method from the standards of accepted engineering practice as set forth in IEEE standards. On the one hand, except for the requirements as to equipment calibration in today's rule, the test method in the rule is the equivalent to the method in the four relevant IEEE standards. On the other hand, DOE believes it is possible that small manufacturers might each be able to modify the details of the IEEE test method so as to best fit its products. As a result its costs of testing needed to comply with the EPACT efficiency standards, *i.e.,* implicit in the EPACT requirements, could be lower than the cost of testing under the test method in today's rule. The Department believes that such savings would not be significant, and to some extent would be offset by the resources a small manufacturer would have to expend to research and develop such a customized test method. Today's method does include requirements to calibrate equipment and maintain records of such calibrations, which are not explicitly included in the IEEE standards. But to achieve the accuracy levels required under these standards, a manufacturer would have to engage in some calibration effort. In any event, DOE estimates that today's rule would

require only about one week of staff time to satisfy the calibration requirements in the first year the rule is operative, and about two days a year thereafter. For the foregoing reasons, the Department concludes that, although today's test method might impose modest burdens on small manufacturers of low-voltage dry-type distribution transformers, these burdens are not significant.

However, the final rule's provisions as to the amount of testing required to rate distribution transformer efficiencies are clearly far less burdensome to small manufacturers than methodologies currently in use. The rule requires each manufacturer to test at least five basic models. For each such model, the manufacturer must test the lesser of all units manufactured over a 180 day period or five units, and must rate the basic model's efficiency by applying a formula to the test results. The rule also allows use of AEDMs to rate the remaining basic models. The IEEE standards contain no provision for sampling, or for use of AEDMs, in rating the efficiency of distribution transformers. Moreover, DOE understands that, under current practice, where a manufacturer must rate a low-voltage dry-type transformer's losses—the equivalent of efficiency determination—typically it will test all units and rate them based on their average efficiency. Although, as explained below in footnote 6, EPCA does not direct DOE to use the sampling regimen in NEMA TP 2–1998, that is a methodology a manufacturer might use to determine whether its low-voltage dry-type transformers comply with EPCA's standards. NEMA TP 2–1998's sampling plan provides that, over a 180-day period, either all units manufactured be tested, or that five or more units per month be tested, thus requiring approximately six times as much testing as today's rule. It also contains no provision for rating transformer efficiencies through use of AEDMs. As explained in the SNOPR, 69 FR 45514–15, NEMA TP 2–1998 clearly requires considerably more testing that today's final rule (which requires the same amount of testing as DOE's proposal in the SNOPR).

Insofar as the final rule's reduction in testing burden results from the use of AEDMs, however, this benefit is not without cost. The Department estimates that a manufacturer would have to incur approximately three to six weeks of engineering staff time to develop a valid AEDM, and approximately two weeks of staff time to administer and maintain the AEDM(s) thereafter. The Department estimates, however, that use of AEDMs would allow a manufacturer to do less than 20 percent of the testing that would otherwise be required.

For all of these reasons, the Department certifies that today's final rule would not have a significant economic impact on a substantial number of small entities. Accordingly, DOE has not prepared a regulatory flexibility analysis for this rulemaking. DOE has transmitted the certification and supporting statement of factual basis to the Chief Counsel for Advocacy of the Small Business Administration for review pursuant to 5 U.S.C. 605(b).

C. Review Under the Paperwork Reduction Act

As indicated in the SNOPR, today's final rule contains certain record-keeping requirements. 69 FR 45517. The situation with respect to the Paperwork Reduction Act (44 U.S.C. 3501 *et seq.*) is similar to that described in Section III.B. with respect to the Regulatory Flexibility Act. For the reasons stated there, unless and until the Department requires manufacturers to comply with energy conservation standards for medium-voltage and liquid immersed distribution transformers, no manufacturer of those products would be required to comply with these record-keeping provisions. Therefore, today's rule would not impose on those manufacturers any new reporting requirements requiring clearance by OMB under the Paperwork Reduction Act. The Department recognizes, however, as also set forth in the SNOPR, that if it adopts standards for those distribution transformers, once the standards become operative manufacturers will become subject to the record-keeping requirements in today's rule, and possibly additional reporting and/or record-keeping requirements. 69 FR 45517.

We received no comments on this issue. For medium-voltage and liquid immersed distribution transformers, the Department intends, as stated in the SNOPR, to comply with the Paperwork Reduction Act with respect to the record-keeping requirements in today's rule at the appropriate point in conjunction with the standards development rulemaking.

Since the publication of the SNOPR, however, the Department has adopted standards prescribed by EPCA for low-voltage dry-type distribution transformers. When these standards become operative on January 1, 2007, manufacturers of those products will be required to comply with the record-keeping provisions in today's rule. Therefore, as to these manufacturers today's final rule contains certain record-keeping requirements that must be approved by the OMB pursuant to the Paperwork Reduction Act before the manufacturers may be required to comply with them. Section 431.197(a)(4)(i) would require manufacturers of distribution transformers to have records as to alternative efficiency determination methods available for DOE inspection; section 6.2 of Appendix A would require maintenance of calibration records. As a result, concurrent with or shortly after publication of today's rule, the Department will issue a notice seeking public comment under the Paperwork Reduction Act, with respect to these manufacturers, on the record-keeping requirements in today's rule. After considering any public comments received in response to that notice, DOE will submit the proposed collection of information to OMB for approval pursuant to 44 U.S.C. 3507.

An agency may not conduct or sponsor, and a person is not required to respond to a collection of information unless it displays a currently valid OMB control number. As stated in the ''EFFECTIVE DATE'' line of this notice of final rulemaking, the information collection requirements in § 431.197(a)(4)(i) and section 6.2(b) and (c) of Appendix A will not become effective until OMB approves them. The Department will publish a document in the **Federal Register** advising low-voltage dry-type manufacturers of their effective date. That document also will display the OMB control number.

D. Review Under the National Environmental Policy Act of 1969

DOE has determined that this rule falls into a class of actions that are categorically excluded from review under the National Environmental Policy Act of 1969 (42 U.S.C. 4321 *et seq.*) and the Department's implementing regulations at 10 CFR part 1021. Specifically, this rule establishing test procedures will not affect the quality or distribution of energy and, will not result in any environmental impacts, and, therefore, is covered by the Categorical Exclusion in paragraph A6 to subpart D, 10 CFR part 1021. Accordingly, neither an environmental assessment nor an environmental impact statement is required.

E. Review Under Executive Order 13132

Executive Order 13132, ''Federalism,'' 64 FR 43255 (August 4, 1999), imposes certain requirements on agencies formulating and implementing policies or regulations that preempt State law or that have federalism implications. The Executive Order requires agencies to

examine the constitutional and statutory authority supporting any action that would limit the policymaking discretion of the States and carefully assess the necessity for such actions. The Executive Order also requires agencies to have an accountable process to ensure meaningful and timely input by State and local officials in the development of regulatory policies that have federalism implications. On March 14, 2000, DOE published a statement of policy describing the intergovernmental consultation process it will follow in the development of such regulations 65 FR 13735. DOE has examined today's final rule and has determined that it does not preempt State law and does not have a substantial direct effect on the States, on the relationship between the national government and the States, or on the distribution of power and responsibilities among the various levels of government. No further action is required by Executive Order 13132.

F. Review Under Executive Order 12988

With respect to the review of existing regulations and the promulgation of new regulations, section 3(a) of Executive Order 12988, ''Civil Justice Reform'' (61 FR 4729, February 7, 1996), imposes on Federal agencies the general duty to adhere to the following requirements: (1) Eliminate drafting errors and ambiguity; (2) write regulations to minimize litigation; and (3) provide a clear legal standard for affected conduct rather than a general standard and promote simplification and burden reduction. Section 3(b) of Executive Order 12988 specifically requires that Executive agencies make every reasonable effort to ensure that the regulation: (1) Clearly specifies the preemptive effect, if any; (2) clearly specifies any effect on existing Federal law or regulation; (3) provides a clear legal standard for affected conduct while promoting simplification and burden reduction; (4) specifies the retroactive effect, if any; (5) adequately defines key terms; and (6) addresses other important issues affecting clarity and general draftsmanship under any guidelines issued by the Attorney General. Section 3(c) of Executive Order 12988 requires Executive agencies to review regulations in light of applicable standards in section 3(a) and section 3(b) to determine whether they are met or it is unreasonable to meet one or more of them. DOE has completed the required review and determined that, to the extent permitted by law, this rule meets the relevant standards of Executive Order 12988.

G. Review Under the Unfunded Mandates Reform Act of 1995

Title II of the Unfunded Mandates Reform Act of 1995 (UMRA) (Pub. L. 104–4) requires each Federal agency to assess the effects of Federal regulatory actions on State, local, and Tribal governments and the private sector. For a proposed regulatory action likely to result in a rule that may cause the expenditure by State, local, and Tribal governments, in the aggregate, or by the private sector of $100 million or more in any one year (adjusted annually for inflation), section 202 of UMRA requires a Federal agency to publish a written statement that estimates the resulting costs, benefits, and other effects on the national economy. (2 U.S.C. 1532(a), (b)) The UMRA also requires a Federal agency to develop an effective process to permit timely input by elected officers of State, local, and Tribal governments on a proposed ''significant intergovernmental mandate,'' and requires an agency plan for giving notice and opportunity for timely input to potentially affected small governments before establishing any requirements that might significantly or uniquely affect small governments. On March 18, 1997, DOE published a statement of policy on its process for intergovernmental consultation under UMRA. 62 FR 12820 (also available at *http://www.gc.doe.gov*). Today's rule does not contain any Federal mandate likely to result in an aggregate expenditure of $100 million or more in any year, so these requirements under the Unfunded Mandates Reform Act do not apply.

H. Review Under the Treasury and General Government Appropriations Act of 1999

Section 654 of the Treasury and General Government Appropriations Act, 1999 (Pub. L. 105–277) requires Federal agencies to issue a Family Policymaking Assessment for any rule that may affect family well-being. This rule would not have any impact on the autonomy or integrity of the family as an institution. Accordingly, DOE has concluded that it is not necessary to prepare a Family Policymaking Assessment.

I. Review Under Executive Order 12630

The Department has determined, under Executive Order 12630, ''Governmental Actions and Interference with Constitutionally Protected Property Rights,'' 53 FR 8859 (March 18, 1988), that this regulation would not result in any takings which might require compensation under the Fifth Amendment to the United States Constitution.

J. Review Under the Treasury and General Government Appropriations Act, 2001

Section 515 of the Treasury and General Government Appropriations Act, 2001 (44 U.S.C. 3516 note) provides for agencies to review most disseminations of information to the public under guidelines established by each agency pursuant to general guidelines issued by OMB. OMB's guidelines were published at 67 FR 8452 (February 22, 2002), and DOE's guidelines were published at 67 FR 62446 (October 7, 2002). The Department has reviewed today's final rule under the OMB and DOE guidelines and has concluded that it is consistent with applicable policies in those guidelines.

K. Review Under Executive Order 13211

Executive Order 13211, ''Actions Concerning Regulations That Significantly Affect Energy Supply, Distribution, or Use,'' 66 FR 28355 (May 22, 2001) requires Federal agencies to prepare and submit to the Office of Information and Regulatory Affairs (OIRA), Office of Management and Budget, a Statement of Energy Effects for any proposed significant energy action. A ''significant energy action'' is defined as any action by an agency that promulgated or is expected to lead to promulgation of a final rule, and that: (1) Is a significant regulatory action under Executive Order 12866, or any successor order; and (2) is likely to have a significant adverse effect on the supply, distribution, or use of energy, or (3) is designated by the Administrator of OIRA as a significant energy action. For any proposed significant energy action, the agency must give a detailed statement of any adverse effects on energy supply, distribution, or use should the proposal be implemented, and of reasonable alternatives to the action and their expected benefits on energy supply, distribution, and use.

This final rule is not a significant regulatory action under Executive Order 12866 or any successor order. In addition, it is not likely to have a significant adverse effect on the supply, distribution, or use of energy, nor has it been designated by the Administrator of OIRA as a significant energy action. Thus, DOE has not prepared a Statement of Energy Effects.

L. Review Under Section 32 of the Federal Energy Administration Act of 1974

Under Section 301 of the Department of Energy Organization Act (Pub. L. 95–91), the Department must comply with Section 32 of the Federal Energy Administration Act of 1974 (FEAA), as amended by the Federal Energy Administration Authorization Act of 1977. (15 U.S.C. 788) The Department indicated in the SNOPR that Section 32 applies to the portion of today's rule that incorporates testing methods contained in five commercial standards, requiring consultation with the Attorney General and the Chairman of the Federal Trade Commission concerning the impact of these standards on competition. 69 FR 45506, 45519 (July 29, 2004).

Since publication of the SNOPR, DOE has reviewed this requirement for consultation as it applies to this final rule. While DOE now believes that such consultation is not necessarily required for this rule, since DOE stated in the SNOPR that it would submit it for consultation under Section 32, it has done so. Neither the Attorney General nor the Chairman of the Federal Trade Commission has recommended against incorporation of these standards.

M. Congressional Notification

As required by 5 U.S.C. 801, DOE will report to Congress on the promulgation of this rule prior to its effective date. The report will state that it has been determined that the rule is not a ''major rule'' as defined by 5 U.S.C. 804(2).

IV. Approval of the Office of the Secretary

The Secretary of Energy has approved publication of this final rule.

List of Subjects in 10 CFR Part 431

Administrative practice and procedure, Distribution transformers, Energy conservation.

Issued in Washington, DC, on March 28, 2006.

Douglas L. Faulkner,

Acting Assistant Secretary, Energy Efficiency and Renewable Energy.

■ For the reasons set forth in the preamble, Part 431 of Chapter II of Title 10, Code of Federal Regulations, is amended as set forth below.

PART 431—ENERGY EFFICIENCY PROGRAM FOR CERTAIN COMMERCIAL AND INDUSTRIAL EQUIPMENT

■ 1. The authority citation for Part 431 continues to read as follows:

Authority: 42 U.S.C. 6291–6317.

■ 2. Section 431.191 is revised to read as follows:

§ 431.191 Purpose and scope.

This subpart contains energy conservation requirements for distribution transformers, pursuant to Parts B and C of Title III of the Energy Policy and Conservation Act, as amended, 42 U.S.C. 6291–6317.

■ 3. Section 431.192 is amended by:

■ a. Revising the Section heading.

■ b. Adding introductory language.

■ c. Adding in alphabetical order definitions of ''autotransformer,'' ''basic model,'' ''drive (isolation) transformer,'' ''efficiency,'' ''excitation current or no-load current,'' ''grounding transformer,'' ''liquid-immersed distribution transformer,'' ''load loss,'' ''machine-tool (control) transformer,'' ''medium-voltage dry-type distribution transformer,'' ''no-load loss,'' ''nonventilated transformer,'' ''phase angle,'' ''phase angle correction,'' ''phase angle error,'' ''rectifier transformer,'' ''reference temperature,'' ''regulating transformer,'' ''sealed transformer,'' ''special-impedance transformer,'' ''temperature correction,'' ''test current,'' ''test frequency,'' ''test voltage,'' ''testing transformer,'' ''total loss,'' ''transformer with tap range of 20 percent or more,'' ''uninterruptible power supply transformer,'' ''waveform correction,'' and ''welding transformer.''

■ d. Revising the definition of ''distribution transformer.''

The revision and additions read as follows:

§ 431.192 Definitions.

The following definitions apply for purposes of this subpart:

Autotransformer means a transformer that:

(1) Has one physical winding that consists of a series winding part and a common winding part;

(2) Has no isolation between its primary and secondary circuits; and

(3) During step-down operation, has a primary voltage that is equal to the total of the series and common winding voltages, and a secondary voltage that is equal to the common winding voltage.

Basic model means a group of models of distribution transformers manufactured by a single manufacturer, that have the same insulation type (*i.e.,* liquid-immersed or dry-type), have the same number of phases (*i.e.,* single or three), have the same standard kVA rating, and do not have any differentiating electrical, physical or functional features that affect energy consumption. Differences in voltage and differences in basic impulse insulation level (BIL) rating are examples of differentiating electrical features that affect energy consumption.

Distribution transformer means a transformer that—

(1) Has an input voltage of 34.5 kV or less;

(2) Has an output voltage of 600 V or less;

(3) Is rated for operation at a frequency of 60 Hz; and

(4) Has a capacity of 10 kVA to 2500 kVA for liquid-immersed units and 15 kVA to 2500 kVA for dry-type units; but

(5) The term ''distribution transformer'' does not include a transformer that is an—

(i) Autotransformer;

(ii) Drive (isolation) transformer;

(iii) Grounding transformer;

(iv) Machine-tool (control) transformer;

(v) Nonventilated transformer;

(vi) Rectifier transformer;

(vii) Regulating transformer;

(viii) Sealed transformer;

(ix) Special-impedance transformer;

(x) Testing transformer;

(xi) Transformer with tap range of 20 percent or more;

(xii) Uninterruptible power supply transformer; or

(xiii) Welding transformer.

Drive (isolation) transformer means a transformer that:

(1) Isolates an electric motor from the line;

(2) Accommodates the added loads of drive-created harmonics; and

(3) Is designed to withstand the additional mechanical stresses resulting from an alternating current adjustable frequency motor drive or a direct current motor drive.

Efficiency means the ratio of the useful power output to the total power input.

Excitation current or no-load current means the current that flows in any winding used to excite the transformer when all other windings are open-circuited.

Grounding transformer means a three-phase transformer intended primarily to provide a neutral point for system-grounding purposes, either by means of:

(1) A grounded wye primary winding and a delta secondary winding; or

(2) A transformer with its primary winding in a zig-zag winding arrangement, and with no secondary winding.

Liquid-immersed distribution transformer means a distribution transformer in which the core and coil assembly is immersed in an insulating liquid.

Load loss means, for a distribution transformer, those losses incident to a specified load carried by the

transformer, including losses in the windings as well as stray losses in the conducting parts of the transformer.

* * * * *

Machine-tool (control) transformer means a transformer that is equipped with a fuse or other over-current protection device, and is generally used for the operation of a solenoid, contactor, relay, portable tool, or localized lighting.

Medium-voltage dry-type distribution transformer means a distribution transformer in which the core and coil assembly is immersed in a gaseous or dry-compound insulating medium, and which has a rated primary voltage between 601 V and 34.5 kV.

No-load loss means those losses that are incident to the excitation of the transformer.

Nonventilated transformer means a transformer constructed so as to prevent external air circulation through the coils of the transformer while operating at zero gauge pressure.

Phase angle means the angle between two phasors, where the two phasors represent progressions of periodic waves of either:

(1) Two voltages;

(2) Two currents; or

(3) A voltage and a current of an alternating current circuit.

Phase angle correction means the adjustment (correction) of measurement data to negate the effects of phase angle error.

Phase angle error means incorrect displacement of the phase angle, introduced by the components of the test equipment.

Rectifier transformer means a transformer that operates at the fundamental frequency of an alternating-current system and that is designed to have one or more output windings connected to a rectifier.

Reference temperature means 20 °C for no-load loss, 55 °C for load loss of liquid-immersed distribution transformers at 50 percent load, and 75 °C for load loss of both low-voltage and medium-voltage dry-type distribution transformers, at 35 percent load and 50 percent load, respectively. It is the temperature at which the transformer losses must be determined, and to which such losses must be corrected if testing is done at a different point. (These temperatures are specified in the test method in Appendix A to this part.)

Regulating transformer means a transformer that varies the voltage, the phase angle, or both voltage and phase angle, of an output circuit and compensates for fluctuation of load and input voltage, phase angle or both voltage and phase angle.

Sealed transformer means a transformer designed to remain hermetically sealed under specified conditions of temperature and pressure.

Special-impedance transformer means any transformer built to operate at an impedance outside of the normal impedance range for that transformer's kVA rating. The normal impedance range for each kVA rating for liquid-immersed and dry-type transformers is shown in Tables 1 and 2, respectively.

TABLE 1.—NORMAL IMPEDANCE RANGES FOR LIQUID-IMMERSED TRANSFORMERS

Single-phase transformers		Three-phase transformers	
kVA	Impedance (%)	kVA	Impedance (%)
10	1.0–4.5	15	1.0–4.5
15	1.0–4.5	30	1.0–4.5
25	1.0–4.5	45	1.0–4.5
37.5	1.0–4.5	75	1.0–5.0
50	1.5–4.5	112.5	1.2–6.0
75	1.5–4.5	150	1.2–6.0
100	1.5–4.5	225	1.2–6.0
167	1.5–4.5	300	1.2–6.0
250	1.5–6.0	500	1.5–7.0
333	1.5–6.0	750	5.0–7.5
500	1.5–7.0	1000	5.0–7.5
667	5.0–7.5	1500	5.0–7.5
833	5.0–7.5	2000	5.0–7.5
		2500	5.0–7.5

TABLE 2.—NORMAL IMPEDANCE RANGES FOR DRY-TYPE TRANSFORMERS

Single-phase transformers		Three-phase transformers	
kVA	Impedance (%)	kVA	Impedance (%)
15	1.5–6.0	15	1.5–6.0
25	1.5–6.0	30	1.5–6.0
37.5	1.5–6.0	45	1.5–6.0
50	1.5–6.0	75	1.5–6.0
75	2.0–7.0	112.5	1.5–6.0
100	2.0–7.0	150	1.5–6.0
167	2.5–8.0	225	3.0–7.0
250	3.5–8.0	300	3.0–7.0
333	3.5–8.0	500	4.5–8.0
500	3.5–8.0	750	5.0–8.0
667	5.0–8.0	1000	5.0–8.0
833	5.0–8.0	1500	5.0–8.0
		2000	5.0–8.0
		2500	5.0–8.0

Temperature correction means the mathematical correction(s) of measurement data, obtained when a transformer is tested at a temperature that is different from the reference temperature, to the value(s) that would have been obtained if the transformer had been tested at the reference temperature.

Test current means the current of the electrical power supplied to the transformer under test.

Test frequency means the frequency of the electrical power supplied to the transformer under test.

Test voltage means the voltage of the electrical power supplied to the transformer under test.

Testing transformer means a transformer used in a circuit to produce a specific voltage or current for the purpose of testing electrical equipment.

Total loss means the sum of the no-load loss and the load loss for a transformer.

* * * * *

Transformer with tap range of 20 percent or more means a transformer with multiple voltage taps, the highest of which equals at least 20 percent more than the lowest, computed based on the sum of the deviations of the voltages of these taps from the transformer's nominal voltage.

Uninterruptible power supply transformer means a transformer that supplies power to an uninterruptible power system, which in turn supplies power to loads that are sensitive to power failure, power sags, over voltage, switching transients, line noise, and other power quality factors.

Waveform correction means the adjustment(s) (mathematical correction(s)) of measurement data obtained with a test voltage that is non-sinusoidal, to a value(s) that would have been obtained with a sinusoidal voltage.

Welding transformer means a transformer designed for use in arc welding equipment or resistance welding equipment.

■ 4. Section 431.193 is added to subpart K, under the heading ''Test Procedures,'' to read as follows:

Test Procedures

§ 431.193 Test procedures for measuring energy consumption of distribution transformers.

The test procedures for measuring the energy efficiency of distribution transformers for purposes of EPCA are specified in Appendix A to this subpart.

■ 5. Section 431.196 is amended in paragraph (a) by revising the table to read as follows:

§ 431.196 Energy conservation standards and their effective dates.

(a) * * *

Single phase		Three phase	
kVA	Efficiency (%) [1]	kVA	Efficiency (%) [1]
15	97.7	15	97.0
25	98.0	30	97.5
37.5	98.2	45	97.7
50	98.3	75	98.0
75	98.5	112.5	98.2
100	98.6	150	98.3
167	98.7	225	98.5
250	98.8	300	98.6
333	98.9	500	98.7
		750	98.8
		1000	98.9

[1] Efficiencies are determined at the following reference conditions: (1) for no-load losses, at the temperature of 20 °C, and (2) for load-losses, at the temperature of 75 °C and 35 percent of nameplate load.

(Source: Table 4–2 of National Electrical Manufacturers Association (NEMA) Standard TP–1–2002, ''Guide for Determining Energy Efficiency for Distribution Transformers.'')

* * * * *

■ 6. Sections 431.197 through 431.198 are added to subpart K, under the heading ''Compliance and Enforcement,'' to read as follows:

Compliance and Enforcement

§ 431.197 Manufacturer's determination of efficiency for distribution transformers.

When a manufacturer or other party (both of which this section refers to as a ''manufacturer'') determines the efficiency of a distribution transformer in order to comply with an obligation imposed on it by or pursuant to Part C of Title III of EPCA, 42 U.S.C. 6311–6317, this section applies. This section does not apply to enforcement testing conducted pursuant to § 431.198 of this part.

(a) *Methods used to determine efficiency*—(1) *General requirements.* A manufacturer must determine the efficiency of each basic model of distribution transformer either by testing, in accordance with § 431.193 of this part and paragraphs (b)(2) and (b)(3) of this section, or by application of an alternative efficiency determination method (AEDM) that meets the requirements of paragraphs (a)(2) and (a)(3) of this section; provided, however, that a manufacturer may use an AEDM to determine the efficiency of one or more of its untested basic models only if it determines the efficiency of at least five of its other basic models (selected in accordance with paragraph (b)(1) of this section) through actual testing. For each basic model of distribution transformer that has a configuration of windings which allows for more than one nominal rated voltage, the manufacturer must determine the basic model's efficiency either at the voltage at which the highest losses occur or at each voltage at which the transformer is rated to operate.

(2) *Alternative efficiency determination method.* A manufacturer may apply an AEDM to a basic model pursuant to paragraph (a)(1) of this section only if:

(i) The AEDM has been derived from a mathematical model that represents the electrical characteristics of that basic model;

(ii) The AEDM is based on engineering and statistical analysis, computer simulation or modeling, or other analytic evaluation of performance data; and

(iii) The manufacturer has substantiated the AEDM, in accordance with paragraph (a)(3) of this section, by applying it to, and testing, at least five

other basic models of the same type, *i.e.,* low-voltage dry-type distribution transformers, medium-voltage dry-type distribution transformers, or liquid-immersed distribution transformers.

(3) *Substantiation of an alternative efficiency determination method.* Before using an AEDM, the manufacturer must substantiate the AEDM's accuracy and reliability as follows:

(i) Apply the AEDM to at least five of the manufacturer's basic models that have been selected for testing in accordance with paragraph (b)(1) of this section, and calculate the power loss for each of these basic models;

(ii) Test at least five units of each of these basic models in accordance with the applicable test procedure and paragraph (b)(2) of this section, and determine the power loss for each of these basic models;

(iii) The predicted total power loss for each of these basic models, calculated by applying the AEDM pursuant to paragraph (a)(3)(i) of this section, must be within plus or minus five percent of the mean total power loss determined from the testing of that basic model pursuant to paragraph (a)(3)(ii) of this section; and

(iv) Calculate for each of these basic models the percentage that its power loss calculated pursuant to paragraph (a)(3)(i) is of its power loss determined from testing pursuant to paragraph (a)(3)(ii), compute the average of these percentages, and that calculated average power loss, expressed as a percentage of the average power loss determined from testing, must be no less than 97 percent and no greater than 103 percent.

(4) *Subsequent verification of an AEDM.* (i) Each manufacturer that has used an AEDM under this section shall have available for inspection by the Department of Energy records showing: The method or methods used; the mathematical model, the engineering or statistical analysis, computer simulation or modeling, and other analytic evaluation of performance data on which the AEDM is based; complete test data, product information, and related information that the manufacturer has generated or acquired pursuant to paragraph (a)(3) of this section; and the calculations used to determine the efficiency and total power losses of each basic model to which the AEDM was applied.

(ii) If requested by the Department, the manufacturer shall conduct simulations to predict the performance of particular basic models of distribution transformers specified by the Department, analyses of previous simulations conducted by the manufacturer, sample testing of basic models selected by the Department, or a combination of the foregoing.

(b) *Additional testing requirements*—(1) *Selection of basic models for testing if an AEDM is to be applied.* (i) A manufacturer must select basic models for testing in accordance with the following criteria:

(A) Two of the basic models must be among the five basic models with the highest unit volumes of production by the manufacturer in the prior year, or during the prior 12-calendar-month period beginning in 2003,[1] whichever is later;

(B) No two basic models should have the same combination of power and voltage ratings; and

(C) At least one basic model should be single-phase and at least one should be three-phase.

(ii) In any instance where it is impossible for a manufacturer to select basic models for testing in accordance with all of these criteria, the criteria shall be given priority in the order in which they are listed. Within the limits imposed by the criteria, basic models shall be selected randomly.

(2) *Selection of units for testing within a basic model.* For each basic model a manufacturer selects for testing, it shall select and test units as follows:

(i) If the manufacturer would produce five or fewer units of a basic model over a reasonable period of time (approximately 180 days), then it must test each unit. However, a manufacturer may not use a basic model with a sample size of fewer than five units to substantiate an AEDM pursuant to paragraph (a)(3) of this section.

(ii) If the manufacturer produces more than five units over such period of time, it must either test all such units or select a sample of at least five units at random and test them. Any such sample shall be comprised of production units of the basic model, or units that are representative of such production units.

(3) *Applying results of testing.* In a test of compliance with a represented efficiency, the average efficiency of the sample, $\bar{X}$, which is defined by

$$\bar{X} = \frac{1}{n}\sum_{i=1}^{n} X_i$$

where X_i is the measured efficiency of unit i and n is the number of units tested, must satisfy the condition:

$$\bar{X} \geq \frac{100}{1+\left(1+\frac{0.08}{\sqrt{n}}\right)\left(\frac{100}{RE}-1\right)}$$

where RE is the represented efficiency.

§ 431.198 Enforcement testing for distribution transformers.

(a) *Test notice.* Upon receiving information in writing, concerning the energy performance of a particular distribution transformer sold by a particular manufacturer or private labeler, which indicates that the transformer may not be in compliance with the applicable energy efficiency standard, or upon undertaking to ascertain the accuracy of the efficiency rating on the nameplate or in marketing materials for a distribution transformer, disclosed pursuant to this part, the Department may conduct testing of that equipment under this subpart by means of a test notice addressed to the manufacturer in accordance with the following requirements:

(1) The test notice procedure will only be followed after the Department has examined the underlying test data (or, where appropriate, data as to use of an AEDM) provided by the manufacturer and after the manufacturer has been offered the opportunity to meet with the Department to verify, as applicable, compliance with the applicable efficiency standard, or the accuracy of labeling information, or both. In addition, where compliance of a basic model was certified based on an AEDM, the Department shall have the discretion to pursue the provisions of § 431.197(a)(4)(ii) prior to invoking the test notice procedure. The Department shall be permitted to observe any reverification procedures undertaken pursuant to this subpart, and to inspect the results of such reverification.

(2) The Department will mail or deliver the test notice to the plant manager or other responsible official, as designated by the manufacturer.

(3) The test notice will specify the basic model(s) to be selected for testing, the method of selecting the test sample, the date and time at which testing shall be initiated, the date by which testing is scheduled to be completed and the facility at which testing will be conducted. The test notice may also provide for situations in which a specified basic model is unavailable for testing, and may include alternative basic models. The specified basic model may be one either that the manufacturer has rated by actual testing or that it has rated by the use of an AEDM.

(4) The Department may require in the test notice that the manufacturer shall

[1] When identifying these five basic models, any basic model that does not comply with Federal energy conservation standards for distribution transformers that may be in effect shall be excluded from consideration.

ship at its expense a reasonable number of units of each basic model specified in such test notice to a testing laboratory designated by the Department. The number of units of each basic model specified in a test notice shall not exceed twenty (20).

(5) Except as required or provided in paragraphs (a)(6) or (a)(7) of this section, initially the Department will test five units.

(6) Except as provided in paragraph (a)(7) of this section, if fewer than five units of a basic model are available for testing when the manufacturer receives the test notice, then

(i) DOE will test the available unit(s); or

(ii) If one or more other units of the basic model are expected to become available within six months, DOE may instead, at its discretion, test either:

(A) The available unit(s) and one or more of the other units that subsequently become available (up to a maximum of twenty); or

(B) Up to twenty of the other units that subsequently become available.

(7) Notwithstanding paragraphs (a)(5) and (a)(6) of this section, if testing of the available or subsequently available units of a basic model would be impractical, as for example where a basic model is very large, has unusual testing requirements, or has limited production, the Department may in its discretion decide to base the determination of compliance on the testing of fewer than the available number of units, if the manufacturer so requests and demonstrates that the criteria of this paragraph are met.

(8) When testing units under paragraphs (a)(5), (a)(6), or (a)(7) of this section, DOE shall perform the following number of tests:

(i) If DOE tests four or more units, it will test each unit once;

(ii) If DOE tests two or three units, it will test each unit twice; or

(iii) If DOE tests one unit, it will test that unit four times.

(9) Within five working days of the time the units are selected, the manufacturer shall ship the specified test units of the basic model to the testing laboratory.

(b) *Testing laboratory.* Whenever the Department conducts enforcement testing at a designated laboratory in accordance with a test notice under this section, the resulting test data shall constitute official test data for that basic model. Such test data will be used by the Department to make a determination of compliance or noncompliance.

(c) *Sampling.* The determination that a manufacturer's basic model complies with its labeled efficiency, or the applicable energy efficiency standard, shall be based on the testing conducted in accordance with the statistical sampling procedures set forth in Appendix B of this subpart and the test procedures specified for distribution transformers.

(d) *Test unit selection.* The Department shall select a batch, a batch sample, and test units from the batch sample in accordance with the following provisions of this paragraph and the conditions specified in the test notice.

(1) The batch may be subdivided by the Department utilizing criteria specified in the test notice.

(2) The Department will then randomly select a batch sample of up to 20 units from one or more subdivided groups within the batch. The manufacturer shall keep on hand all units in the batch sample until such time as the basic model is determined to be in compliance or non-compliance.

(3) The Department will randomly select individual test units comprising the test sample from the batch sample.

(4) All random selection shall be achieved by sequentially numbering all of the units in a batch sample and then using a table of random numbers to select the units to be tested.

(e) *Test unit preparation.* (1) Prior to and during the testing, a test unit selected in accordance with paragraph (d) of this section shall not be prepared, modified, or adjusted in any manner unless such preparation, modification, or adjustment is allowed by the applicable Department of Energy test procedure.

(2) No quality control, testing, or assembly procedures shall be performed on a test unit, or any parts and sub-assemblies thereof, that is not performed during the production and assembly of all other units included in the basic model.

(3) A test unit shall be considered defective if such unit is inoperative or is found to be in noncompliance due to failure of the unit to operate according to the manufacturer's design and operating instructions. Defective units, including those damaged due to shipping or handling, shall be reported immediately to the Department. The Department shall authorize testing of an additional unit on a case-by-case basis.

(f) *Testing at manufacturer's option.* (1) If a manufacturer's basic model is determined to be in noncompliance with the applicable energy performance standard at the conclusion of Department testing in accordance with the sampling plan specified in Appendix B of this subpart, the manufacturer may request that the Department conduct additional testing of the basic model according to procedures set forth in Appendix B of this subpart and the test procedures specified for distribution transformers.

(2) All units tested under this paragraph (f) shall be selected and tested in accordance with the provisions given in paragraphs (a)(9), (b), (d) and (e) of this section.

(3) The manufacturer shall bear the cost of all testing conducted under this paragraph (f).

(4) The manufacturer shall cease distribution of the basic model tested under the provisions of this paragraph from the time the manufacturer elects to exercise the option provided in this paragraph until the basic model is determined to be in compliance. The Department may seek civil penalties for all units distributed during such period.

(5) If the additional testing results in a determination of compliance, a notice of allowance to resume distribution shall be issued by the Department.

■ 7. Appendices A and B are added to subpart K, to read as follows:

Appendix A to Subpart K of Part 431—Uniform Test Method for Measuring the Energy Consumption of Distribution Transformers

1.0 Definitions.

The definitions contained in §§ 431.2 and 431.192 are applicable to this Appendix A.

2.0 Accuracy Requirements.

(a) Equipment and methods for loss measurement shall be sufficiently accurate that measurement error will be limited to the values shown in Table 2.1.

TABLE 2.1.—TEST SYSTEM ACCURACY REQUIREMENTS FOR EACH MEASURED QUANTITY

Measured quantity	Test system accuracy
Power Losses	± 3.0%
Voltage	± 0.5%
Current	± 0.5%
Resistance	± 0.5%
Temperature	± 1.0 °C

(b) Only instrument transformers meeting the 0.3 metering accuracy class, or better, may be used under this test method.

3.0 Resistance Measurements

3.1 *General Considerations*

(a) Measure or establish the winding temperature at the time of the winding resistance measurement.

(b) Measure the direct current resistance (R_{dc}) of transformer windings by one of the methods outlined in section 3.3. The methods of section 3.5 must be used to correct load losses to the applicable reference temperature from the temperature at which they are measured. Observe precautions

while taking measurements, such as those in section 3.4, in order to maintain measurement uncertainty limits specified in Table 2.1.

3.2 *Temperature Determination of Windings and Pre-conditions for Resistance Measurement.*

Make temperature measurements in protected areas where the air temperature is stable and there are no drafts. Determine the winding temperature (T_{dc}) for liquid-immersed and dry-type distribution transformers by the methods described in sections 3.2.1 and 3.2.2, respectively.

3.2.1 *Liquid-Immersed Distribution Transformers.*

3.2.1.1 *Methods*

Record the winding temperature (T_{dc}) of liquid-immersed transformers as the average of either of the following:

(a) The measurements from two temperature sensing devices (for example, thermocouples) applied to the outside of the transformer tank and thermally insulated from the surrounding environment, with one located at the level of the oil and the other located near the tank bottom or at the lower radiator header if applicable; or

(b) The measurements from two temperature sensing devices immersed in the transformer liquid, with one located directly above the winding and other located directly below the winding.

3.2.1.2 *Conditions*

Make this determination under either of the following conditions:

(a) The windings have been under insulating liquid with no excitation and no current in the windings for four hours before the dc resistance is measured; or

(b) The temperature of the insulating liquid has stabilized, and the difference between the top and bottom temperature does not exceed 5 °C.

3.2.2 *Dry-Type Distribution Transformers.*

Record the winding temperature (T_{dc}) of dry-type transformers as either of the following:

(a) For ventilated dry-type units, use the average of readings of four or more thermometers, thermocouples, or other suitable temperature sensors inserted within the coils. Place the sensing points of the measuring devices as close as possible to the winding conductors. For sealed units, such as epoxy-coated or epoxy-encapsulated units, use the average of four or more temperature sensors located on the enclosure and/or cover, as close to different parts of the winding assemblies as possible; or

(b) For both ventilated and sealed units, use the ambient temperature of the test area, under the following conditions:

(1) All internal temperatures measured by the internal temperature sensors must not differ from the test area ambient temperature by more than 2 °C.

(2) Enclosure surface temperatures for sealed units must not differ from the test area ambient temperature by more than 2 °C.

(3) Test area ambient temperature should not have changed by more than 3 °C for 3 hours before the test.

(4) Neither voltage nor current has been applied to the unit under test for 24 hours. In addition, increase this initial 24 hour period by any added amount of time necessary for the temperature of the transformer windings to stabilize at the level of the ambient temperature. However, this additional amount of time need not exceed 24 hours.

3.3 *Resistance Measurement Methods.*

Make resistance measurements using either the resistance bridge method, the voltmeter-ammeter method or a resistance meter. In each instance when this Uniform Test Method is used to test more than one unit of a basic model to determine the efficiency of that basic model, the resistance of the units being tested may be determined from making resistance measurements on only one of the units.

3.3.1 *Resistance Bridge Methods.*

If the resistance bridge method is selected, use either the Wheatstone or Kelvin bridge circuit (or the equivalent of either).

3.3.1.1 *Wheatstone Bridge*

(a) This bridge is best suited for measuring resistances larger than ten ohms. A schematic diagram of a Wheatstone bridge with a representative transformer under test is shown in Figure 3.1.

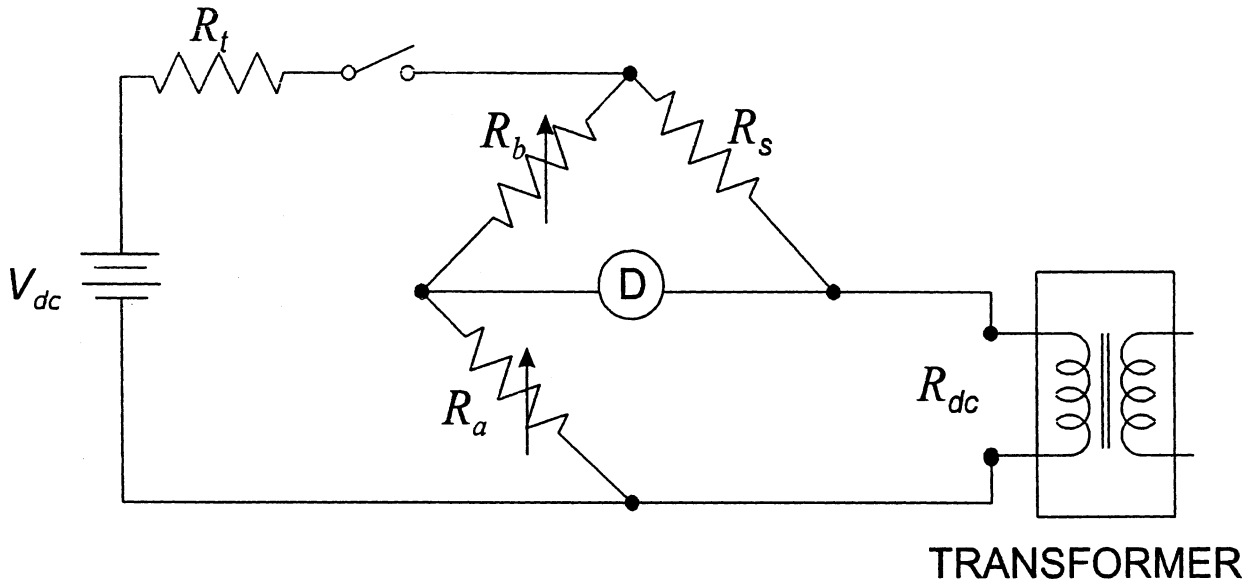

Figure 3.1 Wheatstone Bridge

Where:

R_{dc} is the resistance of the transformer winding being measured,

R_s is a standard resistor having the resistance R_s,

R_a, R_b are two precision resistors with resistance values R_a and R_b , respectively; at least one resistor must have a provision for resistance adjustment,

R_t is a resistor for reducing the time constant of the circuit,

D is a null detector, which may be either a micro ammeter or microvoltmeter or equivalent instrument for observing that no signal is present when the bridge is balanced, and

V_{dc} is a source of dc voltage for supplying the power to the Wheatstone Bridge.

(b) In the measurement process, turn on the source (V_{dc}), and adjust the resistance ratio (R_a/R_b) to produce zero signal at the detector (D). Determine the winding resistance by using equation 3–1 as follows:

$$R_{dc} = R_s\left(R_a/R_b\right) \qquad (3\text{-}1)$$

3.3.1.2 *Kelvin Bridge*

(a) This bridge separates the resistance of the connecting conductors to the transformer winding being measured from the resistance of the winding, and therefore is best suited for measuring resistances of ten ohms and smaller. A schematic diagram of a Kelvin bridge with a representative transformer under test is shown in Figure 3.2.

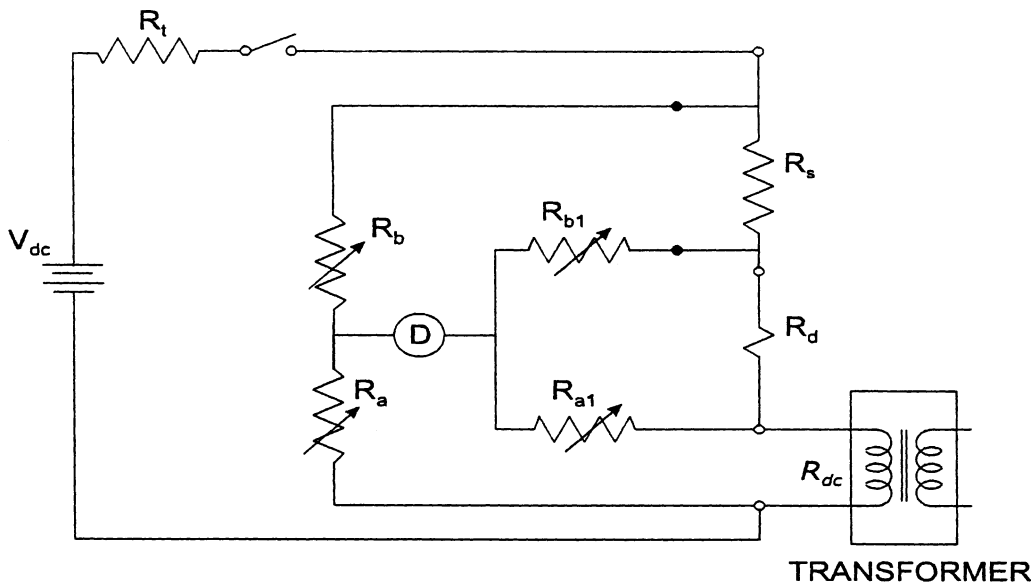

Figure 3.2 Kelvin Bridge

(b) The Kelvin Bridge has seven of the same type of components as in the Wheatstone Bridge. It has two more resistors than the Wheatstone bridge, R_{a1} and R_{b1}. At least one of these resistors must have adjustable resistance. In the measurement process, the source is turned on, two resistance ratios (R_a/R_b) and (R_{a1}/R_{b1}) are adjusted to be equal, and then the two ratios are adjusted together to balance the bridge producing zero signal at the detector. Determine the winding resistance by using equation 3–2 as follows:

$$R_{dc} = R_s\left(R_a/R_b\right) \qquad (3\text{-}2),$$

as with the Wheatstone bridge, with an additional condition that:

$$\left(R_a/R_b\right) = \left(R_{a1}/R_{b1}\right) \qquad (3\text{-}3)$$

(c) The Kelvin bridge provides two sets of leads, current-carrying and voltage-sensing, to the transformer terminals and the standard resistor, thus eliminating voltage drops from the measurement in the current-carrying leads as represented by R_d.

3.3.2 *Voltmeter-Ammeter Method.*

(a) Employ the voltmeter-ammeter method only if the rated current of the winding is greater than one ampere and the test current is limited to 15 percent of the winding current. Connect the transformer winding under test to the circuit shown in Figure 3.3.

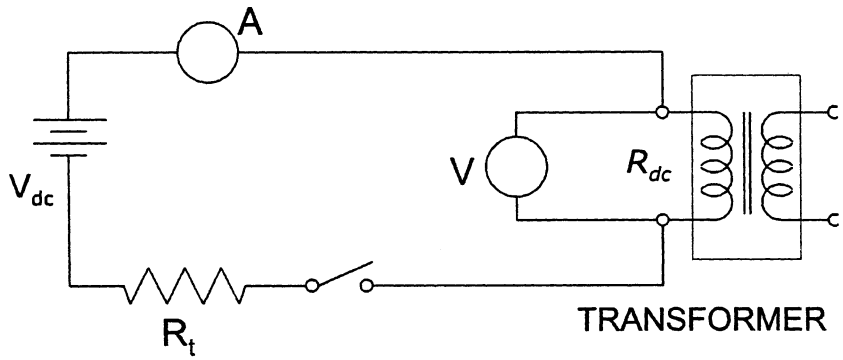

Figure 3.3 Voltmeter-Ammeter Method

Where:

A is an ammeter or a voltmeter-shunt combination for measuring the current (I_{mdc}) in the transformer winding,

V is a voltmeter with sensitivity in the millivolt range for measuring the voltage

(V_{mdc}) applied to the transformer winding,

R_{dc} is the resistance of the transformer winding being measured,

R_t is a resistor for reducing the time constant of the circuit, and

V_{dc} is a source of dc voltage for supplying power to the measuring circuit.

(b) To perform the measurement, turn on the source to produce current no larger than 15 percent of the rated current for the winding. Wait until the current and voltage readings have stabilized and then take simultaneous readings of voltage and current. Determine the winding resistance R_{dc} by using equation 3–4 as follows:

$$R_{dc} = \left(V_{mdc}/I_{mdc}\right) \qquad (3\text{-}4)$$

Where:

V_{mdc} is the voltage measured by the voltmeter V, and

I_{mdc} is the current measured by the ammeter A.

(c) As shown in Figure 3.3, separate current and voltage leads must be brought to the transformer terminals. (This eliminates the errors due to lead and contact resistance.)

3.3.3 *Resistance Meters.*

Resistance meters may be based on voltmeter-ammeter, or resistance bridge, or some other operating principle. Any meter used to measure a transformer's winding resistance must have specifications for resistance range, current range, and ability to measure highly inductive resistors that cover the characteristics of the transformer being tested. Also the meter's specifications for accuracy must meet the applicable criteria of Table 2.1 in section 2.0.

3.4 *Precautions in Measuring Winding Resistance.*

3.4.1 *Required actions.*

The following guidelines must be observed when making resistance measurements:

(a) Use separate current and voltage leads when measuring small (< 10 ohms) resistance.

(b) Use null detectors in bridge circuits, and measuring instruments in voltmeter-ammeter circuits, that have sensitivity and resolution sufficient to enable observation of at least 0.1 percent change in the measured resistance.

(c) Maintain the dc test current at or below 15 percent of the rated winding current.

(d) Inclusion of a stabilizing resistor R_t (see section 3.4.2) will require higher source voltage.

(e) Disconnect the null detector (if a bridge circuit is used) and voltmeter from the circuit before the current is switched off, and switch off current by a suitable insulated switch.

3.4.2 *Guideline for Time Constant.*

(a) The following guideline is suggested for the tester as a means to facilitate the measurement of resistance in accordance with the accuracy requirements of section 2.0:

(b) The accurate reading of resistance R_{dc} may be facilitated by shortening the time constant. This is done by introducing a resistor R_t in series with the winding under test in both the bridge and voltmeter-ammeter circuits as shown in Figures 3.1 to 3.3. The relationship for the time constant is:

$$T_c = \left(L_{tc}/R_{tc}\right) \qquad (3\text{-}5)$$

Where:

T_c is the time constant in seconds,

L_{tc} is the total magnetizing and leakage inductance of the winding under test, in henries, and

R_{tc} is the total resistance in ohms, consisting of R_t in series with the winding resistance R_{dc} and the resistance R_s of the standard resistor in the bridge circuit.

(c) Because R_{tc} is in the denominator of the expression for the time constant, increasing the resistance R_{tc} will decrease the time constant. If the time constant in a given test circuit is too long for the resistance readings to be stable, then a higher resistance can be substituted for the existing R_{tc}, and successive replacements can be made until adequate stability is reached.

3.5 *Conversion of Resistance Measurements.*

(a) Resistance measurements must be corrected, from the temperature at which the winding resistance measurements were made, to the reference temperature. As specified in these test procedures, the reference temperature for liquid-immersed transformers loaded at 50 percent of the rated load is 55 °C. For medium-voltage, dry-type transformers loaded at 50 percent of the rated load, and for low-voltage, dry-type transformers loaded at 35 percent of the rated load, the reference temperature is 75 °C.

(b) Correct the measured resistance to the resistance at the reference temperature using equation 3–6 as follows:

$$R_{ts} = R_{dc}\left[\left(T_s + T_k\right)/\left(T_{dc} + T_k\right)\right] \qquad (3\text{-}6)$$

Where:

R_{ts} is the resistance at the reference temperature, T_s,

R_{dc} is the measured resistance at temperature, T_{dc},

T_s is the reference temperature in °C,

T_{dc} is the temperature at which resistance was measured in °C, and

T_k is 234.5 °C for copper or 225 °C for aluminum.

4.0 Loss Measurement

4.1 *General Considerations.*

The efficiency of a transformer is computed from the total transformer losses, which are determined from the measured value of the no-load loss and load loss power components. Each of these two power loss components is measured separately using test sets that are identical, except that shorting straps are added for the load-loss test. The measured quantities will need correction for instrumentation losses and may need corrections for known phase angle errors in measuring equipment and for the waveform distortion in the test voltage. Any power loss not measured at the applicable reference temperature must be adjusted to that reference temperature. The measured load loss must also be adjusted to a specified output loading level if not measured at the specified output loading level. Test distribution transformers designed for harmonic currents using a sinusoidal waveform (k=1).

4.2 *Measurement of Power Losses.*

4.2.1 *No-Load Loss.*

Measure the no-load loss and apply corrections as described in section 4.4, using the appropriate test set as described in section 4.3.

4.2.2 *Load Loss.*

Measure the load loss and apply corrections as described in section 4.5, using the appropriate test set as described in section 4.3.

4.3 *Test Sets.*

(a) The same test set may be used for both the no-load loss and load loss measurements provided the range of the test set encompasses the test requirements of both tests. Calibrate the test set to national standards to meet the tolerances in Table 2.1 in section 2.0. In addition, the wattmeter, current measuring system and voltage measuring system must be calibrated separately if the overall test set calibration is outside the tolerance as specified in section 2.0 or the individual phase angle error exceeds the values specified in section 4.5.3.

(b) A test set based on the wattmeter-voltmeter-ammeter principle may be used to measure the power loss and the applied voltage and current of a transformer where the transformer's test current and voltage are within the measurement capability of the measuring instruments. Current and voltage transformers, known collectively as instrument transformers, or other scaling devices such as resistive or capacitive dividers for voltage, may be used in the above circumstance, and must be used together with instruments to measure current, voltage, or power where the current or voltage of the transformer under test exceeds the measurement capability of such instruments. Thus, a test set may include a combination of measuring instruments and instrument transformers (or other scaling devices), so long as the current or voltage of the transformer under test does not exceed the measurement capability of any of the instruments.

4.3.1 *Single-Phase Test Sets.*

Use these for testing single-phase distribution transformers.

4.3.1.1 *Without Instrument Transformers.*

(a) A single-phase test set without an instrument transformer is shown in Figure 4.1.

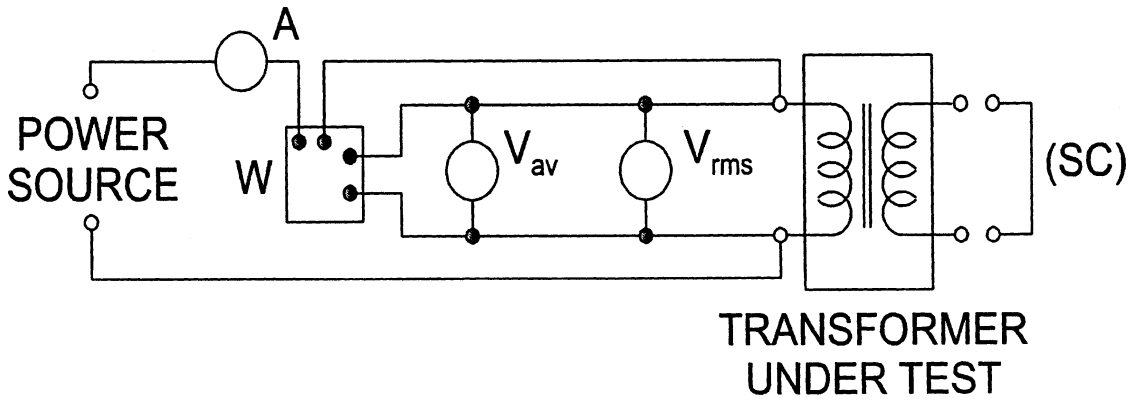

Figure 4.1 Single-Phase Test Set Without Instrument Transformers

Where:

W is a wattmeter used to measure P_{nm} and P_{lm}, the no-load and load loss power, respectively,

V_{rms} is a true root-mean-square (rms) voltmeter used to measure $V_{r(nm)}$ and V_{lm}, the rms test voltages in no-load and load loss measurements, respectively,

V_{av} is an average sensing voltmeter, calibrated to indicate rms voltage for sinusoidal waveforms and used to measure $V_{a(nm)}$, the average voltage in no-load loss measurements,

A is an rms ammeter used to measure test current, especially I_{lm}, the load loss current, and

(SC) is a conductor for providing a short-circuit across the output windings for the load loss measurements.

(b) Either the primary or the secondary winding can be connected to the test set. However, more compatible voltage and current levels for the measuring instruments are available if for no-load loss measurements the secondary (low voltage) winding is connected to the test set, and for load loss measurements the primary winding is connected to the test set. Use the average-sensing voltmeter, V_{av}, only in no-load loss measurements.

4.3.1.2 *With Instrument Transformers.*

A single-phase test set with instrument transformers is shown in Figure 4.2. This circuit has the same four measuring instruments as that in Figure 4.1. The current and voltage transformers, designated as (CT) and (VT), respectively, are added.

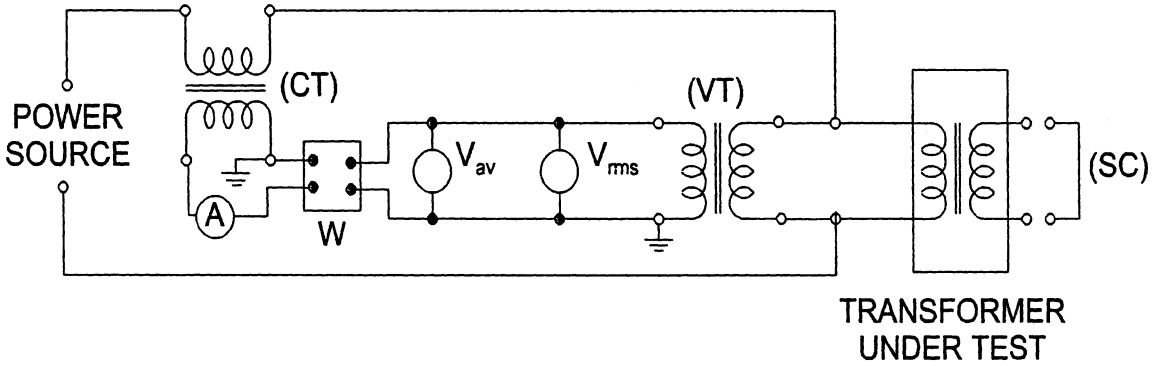

Figure 4.2 Single-Phase Test Set With Instrument Transformers

4.3.2 *Three-Phase Test Sets.*

Use these for testing three-phase distribution transformers. Use in a four-wire, three-wattmeter test circuit.

4.3.2.1 *Without Instrument Transformers.*

(a) A three-phase test set without instrument transformers is shown in Figure 4.3. This test set is essentially the same circuit shown in Figure 4.1 repeated three times, and the instruments are individual devices as shown. As an alternative, the entire instrumentation system of a three-phase test set without transformers may consist of a multi-function analyzer.

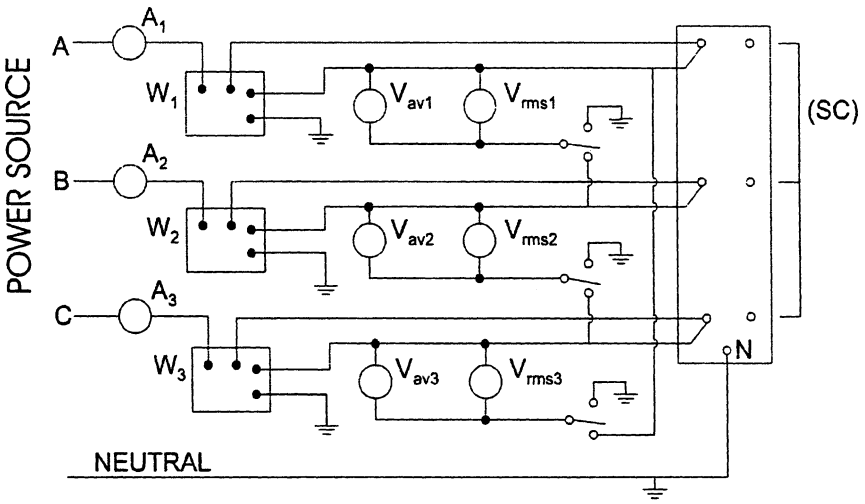

Figure 4.3 Three-Phase Test Set Without Instrument Transformers

(b) Either group of windings, the primary or the secondary, can be connected in wye or delta configuration. If both groups of windings are connected in the wye configuration for the no-load test, the neutral of the winding connected to the test set must be connected to the neutral of the source to provide a return path for the neutral current.

(c) In the no-load loss measurement, the voltage on the winding must be measured. Therefore a provision must be made to switch the voltmeters for line-to-neutral measurements for wye-connected windings and for line-to-line measurements for delta-connected windings.

4.3.2.2 *With Instrument Transformers.* A three-phase test set with instrument transformers is shown in Figure 4.4. This test set is essentially the same circuit shown in Figure 4.2 repeated three times. Provision must be made to switch the voltmeters for line-to-neutral and line-to-line measurements as in section 4.3.2.1. The voltage sensors (''coils'') of the wattmeters must always be connected in the line-to-neutral configuration.

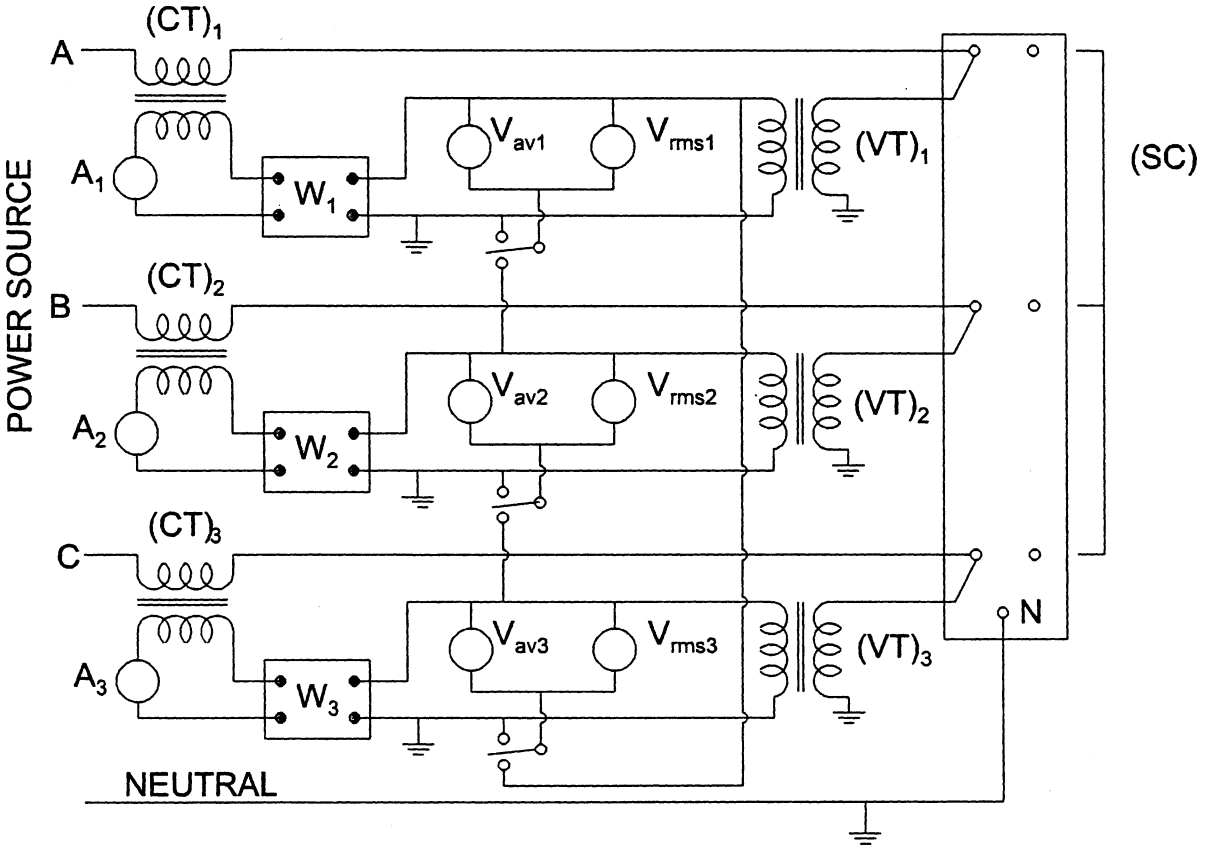

Figure 4.4 Three-Phase Test Set with Instrument Transformers

4.3.2.3 *Test Set Neutrals.*

If the power source in the test circuit is wye-connected, ground the neutral. If the power source in the test circuit is delta-connected, use a grounding transformer to obtain neutral and ground for the test.

4.4 *No-Load Losses: Measurement and Calculations.*

4.4.1 *General Considerations.*

Measurement corrections are permitted but not required for instrumentation losses and for losses from auxiliary devices. Measurement corrections are required:

(a) When the waveform of the applied voltage is non-sinusoidal; and

(b) When the core temperature or liquid temperature is outside the 20 °C ± 10 °C range.

4.4.2 *No-Load Loss Test.*

(a) The purpose of the no-load loss test is to measure no-load losses at a specified excitation voltage and a specified frequency. The no-load loss determination must be based on a sine-wave voltage corrected to the reference temperature. Connect either of the transformer windings, primary or secondary, to the appropriate test set of Figures 4.1 to 4.4, giving consideration to section 4.4.2(a)(2). Leave the unconnected winding(s) open circuited. Apply the rated voltage at rated frequency, as measured by the average-sensing voltmeter, to the transformer. Take the readings of the wattmeter(s) and the average-sensing and true rms voltmeters. Observe the following precautions:

(1) Voltmeter connections. When correcting to a sine-wave basis using the average-voltmeter method, the voltmeter connections must be such that the waveform applied to the voltmeters is the same as the waveform across the energized windings.

(2) Energized windings. Energize either the high voltage or the low voltage winding of the transformer under test.

(3) Voltage and frequency. The no-load loss test must be conducted with rated voltage impressed across the transformer terminals using a voltage source at a frequency equal to the rated frequency of the transformer under test.

(b) Adjust the voltage to the specified value as indicated by the average-sensing voltmeter. Record the values of rms voltage, rms current, electrical power, and average voltage as close to simultaneously as possible. For a three-phase transformer, take all of the readings on one phase before proceeding to the next, and record the average of the three rms voltmeter readings as the rms voltage value.

Note: When the tester uses a power supply that is not synchronized with an electric utility grid, such as a dc/ac motor-generator set, check the frequency and maintain it within ±0.5 percent of the rated frequency of the transformer under test. A power source that is directly connected to, or synchronized with, an electric utility grid need not be monitored for frequency.

4.4.3 *Corrections.*

4.4.3.1 *Correction for Instrumentation Losses.*

Measured losses attributable to the voltmeters and wattmeter voltage circuit, and to voltage transformers if they are used, may be deducted from the total no-load losses measured during testing.

4.4.3.2 *Correction for Non-Sinusoidal Applied Voltage.*

(a) The measured value of no-load loss must be corrected to a sinusoidal voltage, except when waveform distortion in the test voltage causes the magnitude of the correction to be less than 1 percent. In such a case, no correction is required.

(b) To make a correction where the distortion requires a correction of 5 percent or less, use equation 4–1. If the distortion requires a correction to be greater than 5 percent, improve the test voltage and re-test. Repeat until the distortion requires a correction of 5 percent or less.

(c) Determine the no-load losses of the transformer corrected for sine-wave basis from the measured value by using equation 4–1 as follows:

$$P_{ncl} = \frac{P_{nm}}{P_1 + kP_2} \qquad (4\text{-}1)$$

Where:

P_{ncl} is the no-load loss corrected to a sine-wave basis at the temperature (T_{nm}) at which no-load loss is measured,

P_{nm} is the measured no-load loss at temperature T_{nm},

P_1 is the per unit hysteresis loss,

P_2 is the per unit eddy-current loss,

$P_1 + P_2 = 1$,

$$k = \left(\frac{V_{r(nm)}}{V_{a(nm)}}\right)^2,$$

$V_{r(nm)}$ is the test voltage measured by rms voltmeter, and

$V_{a(nm)}$ is the test voltage measured by average-voltage voltmeter.

(d) The two loss components (P_1 and P_2) are assumed equal in value, each assigned a value of 0.5 per unit, unless the actual measurement-based values of hysteresis and eddy-current losses are available (in per unit form), in which case the actual measurements apply.

4.4.3.3 *Correction of No-Load Loss to Reference Temperature.*

After correcting the measured no-load loss for waveform distortion, correct the loss to the reference temperature of 20 °C. If the no-load loss measurements were made between 10 °C and 30 °C, this correction is not required. If the correction to reference temperature is applied, then the core temperature of the transformer during no-load loss measurement (T_{nm}) must be determined within ± 10 °C of the true average core temperature. Correct the no-load loss to the reference temperature by using equation 4–2 as follows:

$$P_{nc} = P_{ncl}\left[1 + 0.00065\left(T_{nm} - T_{nr}\right)\right] \qquad (4\text{-}2)$$

Where:

P_{nc} is the no-load losses corrected for waveform distortion and then to the reference temperature of 20 °C,

P_{nc1} is the no-load losses, corrected for waveform distortion, at temperature T_{nm},

T_{nm} is the core temperature during the measurement of no-load losses, and

T_{nr} is the reference temperature, 20 °C.

4.5 *Load Losses: Measurement and Calculations.*

4.5.1 *General Considerations.*

(a) The load losses of a transformer are those losses incident to a specified load carried by the transformer. Load losses consist of ohmic loss in the windings due to the load current and stray losses due to the eddy currents induced by the leakage flux in the windings, core clamps, magnetic shields, tank walls, and other conducting parts. The ohmic loss of a transformer varies directly with temperature, whereas the stray losses vary inversely with temperature.

(b) For a transformer with a tap changer, conduct the test at the rated current and rated-voltage tap position. For a transformer that has a configuration of windings which allows for more than one nominal rated voltage, determine its load losses either in the winding configuration in which the highest losses occur or in each winding configuration in which the transformer can operate.

4.5.2 *Tests for Measuring Load Losses.*

(a) Connect the transformer with either the high-voltage or low-voltage windings to the appropriate test set. Then short-circuit the winding that was not connected to the test set. Apply a voltage at the rated frequency (of the transformer under test) to the connected windings to produce the rated current in the transformer. Take the readings of the wattmeter(s), the ammeters(s), and rms voltmeter(s).

(b) Regardless of the test set selected, the following preparatory requirements must be satisfied for accurate test results:

(1) Determine the temperature of the windings using the applicable method in section 3.2.1 or section 3.2.2.

(2) The conductors used to short-circuit the windings must have a cross-sectional area equal to, or greater than, the corresponding transformer leads, or, if the tester uses a different method to short-circuit the windings, the losses in the short-circuiting conductor assembly must be less than 10 percent of the transformer's load losses.

(3) When the tester uses a power supply that is not synchronized with an electric utility grid, such as a dc/ac motor-generator set, follow the provisions of the ''Note'' in section 4.4.2.

4.5.3 *Corrections.*

4.5.3.1 *Correction for Losses from Instrumentation and Auxiliary Devices.*

4.5.3.1.1 *Instrumentation Losses.*

Measured losses attributable to the voltmeters, wattmeter voltage circuit and short-circuiting conductor (SC), and to the voltage transformers if they are used, may be deducted from the total load losses measured during testing.

4.5.3.1.2 *Losses from Auxiliary Devices.*

Measured losses attributable to auxiliary devices (*e.g.*, circuit breakers, fuses, switches) installed in the transformer, if any, that are not part of the winding and core assembly, may be excluded from load losses measured during testing. To exclude these losses, either (1) measure transformer losses without the auxiliary devices by removing or by-passing them, or (2) measure transformer losses with the auxiliary devices connected, determine the losses associated with the

auxiliary devices, and deduct these losses from the load losses measured during testing.

4.5.3.2 *Correction for Phase Angle Errors.*

(a) Corrections for phase angle errors are not required if the instrumentation is calibrated over the entire range of power factors and phase angle errors. Otherwise, determine whether to correct for phase angle errors from the magnitude of the normalized per unit correction, β_n, obtained by using equation 4–3 as follows:

$$\beta_n = \frac{V_{lm} I_{lm} (\beta_w - \beta_v + \beta_c) \sin \phi}{p_{lm}} \qquad (4\text{-}3)$$

(b) The correction must be applied if β_n is outside the limits of ±0.01. If β_n is within the limits of ±0.01, the correction is permitted but not required.

(c) If the correction for phase angle errors is to be applied, first examine the total system phase angle ($\beta_w - \beta_v + \beta_c$). Where the total system phase angle is equal to or less than ±12 milliradians (±41 minutes), use either equation 4–4 or 4–5 to correct the measured load loss power for phase angle errors, and where the total system phase angle exceeds ±12 milliradians (±41 minutes) use equation 4–5, as follows:

$$P_{lcl} = P_{lm} - V_{lm} I_{lm} (\beta_w - \beta_v + \beta_c) \sin \phi \qquad (4\text{-}4)$$

$$P_{lcl} = V_{lm} I_{lm} \cos(\phi + \beta_w - \beta_v + \beta_c) \qquad (4\text{-}5)$$

(d) The symbols in this section (4.5.3.2) have the following meanings:

P_{lc1} is the corrected wattmeter reading for phase angle errors,

P_{lm} is the actual wattmeter reading,

V_{lm} is the measured voltage at the transformer winding,

I_{lm} is the measured rms current in the transformer winding,

$$\phi = \cos^{-1} \frac{P_{lm}}{V_{lm} I_{lm}}$$

is the measured phase angle between V_{lm} and I_{lm},

β_w is the phase angle error (in radians) of the wattmeter; the error is positive if the phase angle between the voltage and current phasors as sensed by the wattmeter is smaller than the true phase angle, thus effectively increasing the measured power,

β_v is the phase angle error (in radians) of the voltage transformer; the error is positive if the secondary voltage leads the primary voltage, and

β_c is the phase angle error (in radians) of the current transformer; the error is positive if the secondary current leads the primary current.

(e) The instrumentation phase angle errors used in the correction equations must be specific for the test conditions involved.

4.5.3.3 *Temperature Correction of Load Loss.*

(a) When the measurement of load loss is made at a temperature T_{lm} that is different from the reference temperature, use the procedure summarized in the equations 4–6 to 4–10 to correct the measured load loss to the reference temperature. The symbols used in these equations are defined at the end of this section.

(b) Calculate the ohmic loss (P_e) by using equation 4–6 as follows:

$$\begin{aligned} P_e &= P_{e(p)} + P_{e(s)} \\ &= I^2_{lm(p)} R_{dc(p)} \frac{T_{k(p)} + T_{lm}}{T_{k(p)} + T_{dc}} + I^2_{lm(s)} R_{dc(s)} \frac{T_{k(s)} + T_{lm}}{T_{k(s)} + T_{dc}} \\ &= I^2_{lm(p)} \left[R_{dc(p)} \frac{T_{k(p)} + T_{lm}}{T_{k(p)} + T_{dc}} + \left[\frac{N_1}{N_2} \right]^2 R_{dc(s)} \frac{T_{k(s)} + T_{lm}}{T_{k(s)} + T_{dc}} \right] \end{aligned} \qquad (4\text{-}6)$$

(c) Obtain the stray loss by subtracting the calculated ohmic loss from the measured load loss, by using equation 4–7 as follows:

$$P_s = P_{lc1} - P_e \qquad (4\text{-}7)$$

(d) Correct the ohmic and stray losses to the reference temperature for the load loss by using equations 4–8 and 4–9, respectively, as follows:

$$\begin{aligned} P_{er} &= P_{e(p)} \frac{T_{k(p)} + T_{lr}}{T_{k(p)} + T_{lm}} + P_{e(s)} \frac{T_{k(s)} + T_{lr}}{T_{k(s)} + T_{lm}} \\ &= I^2_{lm(p)} \left[R_{dc(p)} \frac{T_{k(p)} + T_{lr}}{T_{k(p)} + T_{dc}} + \left[\frac{N_1}{N_2} \right]^2 R_{dc(s)} \frac{T_{k(s)} + T_{lr}}{T_{k(s)} + T_{dc}} \right] \end{aligned} \qquad (4\text{-}8)$$

$$P_{sr} = (P_{lc1} - P_e) \frac{T_k + T_{lm}}{T_k + T_{lr}} \qquad (4\text{-}9)$$

(e) Add the ohmic and stray losses, corrected to the reference temperature, to give the load loss, P_{lc2}, at the reference temperature, by using equation 4–10 as follows:

$$P_{lc2} = P_{er} + P_{sr}$$

$$= I_{lm(p)}^2 \left[R_{dc(p)} \frac{T_{k(p)} + T_{lr}}{T_{k(p)} + T_{dc}} + \left[\frac{N_1}{N_2} \right]^2 R_{dc(s)} \frac{T_{k(s)} + T_{lr}}{T_{k(s)} + T_{dc}} \right]$$

$$+ \left[P_{lc1} - I_{lm(p)}^2 \left[R_{dc(p)} \frac{T_{k(p)} + T_{lm}}{T_{k(p)} + T_{dc}} + \left[\frac{N_1}{N_2} \right]^2 R_{dc(s)} \frac{T_{k(s)} + T_{lm}}{T_{k(s)} + T_{dc}} \right] \right] \frac{T_k + T_{lm}}{T_k + T_{lr}} \qquad (4\text{-}10)$$

(f) The symbols in this section (4.5.3.3) have the following meanings:

$I_{lm(p)}$ is the primary current in amperes,
$I_{lm(s)}$ is the secondary current in amperes,
P_e is the ohmic loss in the transformer in watts at the temperature T_{lm},
$P_{e(p)}$ is the ohmic loss in watts in the primary winding at the temperature T_{lm},
$P_{e(s)}$ is the ohmic loss in watts in the secondary winding at the temperature T_{lm},
P_{er} is the ohmic loss in watts corrected to the reference temperature,
P_{lc1} is the measured load loss in watts, corrected for phase angle error, at the temperature T_{lm},
P_{lc2} is the load loss at the reference temperature,
P_s is the stray loss in watts at the temperature T_{lm},
P_{sr} is the stray loss in watts corrected to the reference temperature,
$R_{dc(p)}$ is the measured dc primary winding resistance in ohms,
$R_{dc(s)}$ is the measured dc secondary winding resistance in ohms,
T_k is the critical temperature in degrees Celsius for the material of the transformer windings. Where copper is used in both primary and secondary windings, T_k is 234.5 °C; where aluminum is used in both primary and secondary windings, T_k is 225 °C; where both copper and aluminum are used in the same transformer, the value of 229 °C is used for T_k,
$T_{k(p)}$ is the critical temperature in degrees Celsius for the material of the primary winding: 234.5 °C if copper and 225 °C if aluminum,
$T_{k(s)}$ is the critical temperature in degrees Celsius for the material of the secondary winding: 234.5 °C if copper and 225 °C if aluminum,
T_{lm} is the temperature in degrees Celsius at which the load loss is measured,
T_{lr} is the reference temperature for the load loss in degrees Celsius,
T_{dc} is the temperature in degrees Celsius at which the resistance values are measured, and
N_1/N_2 is the ratio of the number of turns in the primary winding (N_1) to the number of turns in the secondary winding (N_2); for a primary winding with taps, N_1 is the number of turns used when the voltage applied to the primary winding is the rated primary voltage.

5.0 Determining the Efficiency Value of the Transformer

This section presents the equations to use in determining the efficiency value of the transformer at the required reference conditions and at the specified loading level. The details of measurements are described in sections 3.0 and 4.0. For a transformer that has a configuration of windings which allows for more than one nominal rated voltage, determine its efficiency either at the voltage at which the highest losses occur or at each voltage at which the transformer is rated to operate.

5.1 *Output Loading Level Adjustment.*

If the output loading level for energy efficiency is different from the level at which the load loss power measurements were made, then adjust the corrected load loss power, P_{lc2}, by using equation 5–1 as follows:

$$P_{lc} = P_{lc2} \left[\frac{P_{os}}{P_{or}} \right] = P_{lc2} L^2 \qquad (5\text{-}1)$$

Where:

P_{lc} is the adjusted load loss power to the specified energy efficiency load level,
P_{lc2} is as calculated in section 4.5.3.3,
P_{or} is the rated transformer apparent power (name plate),
P_{os} is the specified energy efficiency load level, where , and $P_{os} = P_{or}L^2$, and
L is the per unit load level, e.g., if the load level is 50 percent then ''L'' will be 0.5.

5.2 *Total Loss Power Calculation.*

Calculate the corrected total loss power by using equation 5–2 as follows:

$$P_{ts} = P_{nc} + P_{lc} \qquad (5\text{-}2)$$

Where:

P_{ts} is the corrected total loss power adjusted for the transformer output loading specified by the standard,
P_{nc} is as calculated in section 4.4.3.3, and
P_{lc} is as calculated in section 5.1.

5.3 *Energy Efficiency Calculation.*

Calculate efficiency (η) in percent at specified energy efficiency load level, P_{os}, by using equation 5–3 as follows:

$$\eta = 100 \left(\frac{P_{os}}{P_{os} + P_{ts}} \right) \qquad (5\text{-}3)$$

Where:

P_{os} is as described and calculated in section 5.1, and
P_{ts} is as described and calculated in section 5.2.

5.4 *Significant Figures in Power Loss and Efficiency Data.*

In measured and calculated data, retain enough significant figures to provide at least 1 percent resolution in power loss data and 0.01 percent resolution in efficiency data.

6.0 Test Equipment Calibration and Certification

Maintain and calibrate test equipment and measuring instruments, maintain calibration records, and perform other test and measurement quality assurance procedures according to the following sections. The calibration of the test set must confirm the accuracy of the test set to that specified in section 2.0, Table 2.1.

6.1 *Test Equipment.*

The party performing the tests shall control, calibrate and maintain measuring and test equipment, whether or not it owns the equipment, has the equipment on loan, or the equipment is provided by another party. Equipment shall be used in a manner which assures that measurement uncertainty is known and is consistent with the required measurement capability.

6.2 *Calibration and Certification.*

The party performing the tests must:

(a) Identify the measurements to be made, the accuracy required (section 2.0) and select the appropriate measurement and test equipment;

(b) At prescribed intervals, or prior to use, identify, check and calibrate, if needed, all measuring and test equipment systems or devices that affect test accuracy, against certified equipment having a known valid relationship to nationally recognized standards; where no such standards exist, the basis used for calibration must be documented;

(c) Establish, document and maintain calibration procedures, including details of equipment type, identification number, location, frequency of checks, check method, acceptance criteria and action to be taken when results are unsatisfactory;

(d) Ensure that the measuring and test equipment is capable of the accuracy and precision necessary, taking into account the voltage, current and power factor of the transformer under test;

(e) Identify measuring and test equipment with a suitable indicator or approved identification record to show the calibration status;

(f) Maintain calibration records for measuring and test equipment;

(g) Assess and document the validity of previous test results when measuring and test equipment is found to be out of calibration;

(h) Ensure that the environmental conditions are suitable for the calibrations, measurements and tests being carried out;

(i) Ensure that the handling, preservation and storage of measuring and test equipment is such that the accuracy and fitness for use is maintained; and

(j) Safeguard measuring and test facilities, including both test hardware and test software, from adjustments which would invalidate the calibration setting.

Appendix B to Subpart K of Part 431—Sampling Plan for Enforcement Testing

Step 1. The number of units in the sample (m_1) shall be in accordance with §§ 431.198(a)(4), 431.198(a)(5), 431.198(a)(6) and 431.198(a)(7) and shall not be greater than twenty. The number of tests in the first sample (n_1) shall be in accordance with § 431.198(a)(8) and shall be not fewer than four.

Step 2. Compute the mean ($\bar{X}_i$) of the measured energy performance of the n_1 tests in the first sample by using equation 1 as follows:

$$\bar{X}_1 = \frac{1}{n_1}\sum_{i=1}^{n_1} X_i \qquad (1)$$

where X_i is the measured efficiency of test i.

Step 3. Compute the sample standard deviation (S_1) of the measured efficiency of the n_1 tests in the first sample by using equation 2 as follows:

$$S_1 = \sqrt{\frac{\sum_{i=1}^{n_1}\left(X_i - \bar{X}_1\right)^2}{n_1 - 1}} \qquad (2)$$

Step 4. Compute the standard error ($SE(\bar{X}_1)$) of the mean efficiency of the first sample by using equation 3 as follows:

$$SE\left(\bar{X}_1\right) = \frac{S_1}{\sqrt{n_1}} \qquad (3)$$

Step 5. Compute the sample size discount ($SSD(m_1)$) by using equation 4 as follows:

$$SSD\left(m_1\right) = \frac{100}{1 + \left(1 + \frac{.08}{\sqrt{m_1}}\right)\left(\frac{100}{RE} - 1\right)} \qquad (4)$$

where m_1 is the number of units in the sample, and RE is the applicable EPCA efficiency when the test is to determine compliance with the applicable statutory standard, or is the labeled efficiency when the test is to determine compliance with the labeled efficiency value.

Step 6. Compute the lower control limit (LCL_1) for the mean of the first sample by using equation 5 as follows:

$$LCL_1 = SSD\left(m_1\right) - tSE\left(\bar{X}_1\right) \qquad (5)$$

where t is the 2.5th percentile of a t-distribution for a sample size of n_1, which yields a 97.5 percent confidence level for a one-tailed t-test.

Step 7. Compare the mean of the first sample ($\bar{X}_1$) with the lower control limit (LCL_1) to determine one of the following:

(i) If the mean of the first sample is below the lower control limit, then the basic model is in non-compliance and testing is at an end.

(ii) If the mean is equal to or greater than the lower control limit, no final determination of compliance or non-compliance can be made; proceed to Step 8.

Step 8. Determine the recommended sample size (n) by using equation 6 as follows:

$$n = \left[\frac{tS_1\left(108 - 0.08RE\right)}{RE\left(8 - 0.08RE\right)}\right]^2 \qquad (6)$$

where S_1 and t have the values used in Steps 3 and 6, respectively. The factor

$$\frac{108 - 0.08RE}{RE\left(8 - 0.08RE\right)}$$

is based on an 8-percent tolerance in the total power loss.

Given the value of n, determine one of the following:

(i) If the value of n is less than or equal to n_1 and if the mean energy efficiency of the first sample ($\bar{X}_1$) is equal to or greater than the lower control limit (LCL_1), the basic model is in compliance and testing is at an end.

(ii) If the value of n is greater than n_1, and no additional units are available for testing, testing is at an end and the basic model is in non-compliance. If the value of n is greater than n_1, and additional units are available for testing, select a second sample n_2. The size of the n_2 sample is determined to be the smallest integer equal to or greater than the difference $n–n_1$. If the value of n_2 so calculated is greater than $20–n_1$, set n_2 equal to $20–n_1$.

Step 9. After testing the n_2 sample, compute the combined mean ($\bar{X}_2$) of the measured energy performance of the n_1 and n_2 tests of the combined first and second samples by using equation 7 as follows:

$$\bar{X}_2 = \frac{1}{n_1 + n_2}\sum_{i=1}^{n_1+n_2} X_i \qquad (7)$$

Step 10. Compute the standard error ($SE(\bar{X}_2)$) of the mean efficiency of the n_1 and n_2 tests in the combined first and second samples by using equation 8 as follows:

$$SE\left(\bar{X}_2\right) = \frac{S_1}{\sqrt{n_1 + n_2}} \qquad (8)$$

(Note that S_1 is the value obtained above in Step 3.)

Step 11. Set the lower control limit (LCL_2) to,

$$LCL_2 = SSD\left(m_1\right) - tSE\left(\bar{X}_2\right) \qquad (9)$$

where t has the value obtained in Step 5 and $SSD(m_1)$ is sample size discount from Step 5. Compare the combined sample mean ($\bar{X}_2$) to the lower control limit (LCL_2) to find one of the following:

(i) If the mean of the combined sample ($\bar{X}_2$) is less than the lower control limit (LCL_2), the basic model is in non-compliance and testing is at an end.

(ii) If the mean of the combined sample ($\bar{X}_2$) is equal to or greater than the lower control limit (LCL_2), the basic model is in compliance and testing is at an end.

Manufacturer-Option Testing

If a determination of non-compliance is made in Steps 6, 7 or 11, above, the manufacturer may request that additional testing be conducted, in accordance with the following procedures.

Step A. The manufacturer requests that an additional number, n_3, of units be tested, with n_3 chosen such that $n_1+n_2+n_3$ does not exceed 20.

Step B. Compute the mean efficiency, standard error, and lower control limit of the new combined sample in accordance with the procedures prescribed in Steps 8, 9, and 10, above.

Step C. Compare the mean performance of the new combined sample to the lower control limit (LCL_2) to determine one of the following:

(a) If the new combined sample mean is equal to or greater than the lower control limit, the basic model is in compliance and testing is at an end.

(b) If the new combined sample mean is less than the lower control limit and the value of $n_1+n_2+n_3$ is less than 20, the manufacturer may request that additional units be tested. The total of all units tested may not exceed 20. Steps A, B,and C are then repeated.

(c) Otherwise, the basic model is determined to be in non-compliance.

[FR Doc. 06–3165 Filed 4–26–06; 8:45 am]

BILLING CODE 6450–01–P

Federal Register

Thursday,
April 27, 2006

Part IV

Department of Agriculture

Animal and Plant Health Inspection Service

7 CFR Parts 305, 319, and 352
Revision of Fruits and Vegetables Import Regulations; Proposed Rule

DEPARTMENT OF AGRICULTURE

Animal and Plant Health Inspection Service

7 CFR Parts 305, 319, and 352

[Docket No. APHIS–2005–0106]

RIN 0579–AB80

Revision of Fruits and Vegetables Import Regulations

AGENCY: Animal and Plant Health Inspection Service, USDA.

ACTION: Proposed rule and notice of public hearings.

SUMMARY: We are proposing to revise and reorganize the regulations pertaining to the importation of fruits and vegetables to consolidate requirements of general applicability and eliminate redundant requirements, update terms and remove outdated requirements and references, update the regulations that apply to importations into territories under U.S. administration, and make various editorial and nonsubstantive changes to regulations to make them easier to use. We are also proposing to make substantive changes to the regulations, including: Establishing criteria within the regulations that, if met, would allow us to approve certain new fruits and vegetables for importation into the United States and to acknowledge pest-free areas in foreign countries more effectively and expeditiously; doing away with the practice of listing specific commodities that may be imported subject to certain types of phytosanitary measures; and providing for the issuance of special use permits for fruits and vegetables. These changes are intended to simplify and expedite our processes for approving certain new imports and pest-free areas while continuing to allow for public participation in the processes. This proposal, if adopted, would represent a significant structural revision of the fruits and vegetables import regulations and would establish a new process for approving certain new commodities for importation into the United States. It would not, however, allow the importation of any specific new fruits or vegetables, nor would it alter the conditions for importing currently approved fruits or vegetables except as specifically described in this document. To the extent to which trading partners consider the time it takes to conduct the rulemaking process a trade barrier, by reducing that time, these proposed changes may facilitate the export of U.S. agricultural commodities. The proposed changes would not alter the manner in which the risk associated with a commodity import request is evaluated, nor would it alter the manner in which those risks are ultimately mitigated.

DATES: We will consider all comments that we receive on or before July 26, 2006. We will also consider comments made at public hearings to be held in Seattle, WA, on May 23, 2006; in Los Angeles, CA, on May 24, 2006; in Miami, FL, on May 26, 2006; and in Washington, DC, on June 20, 2006.

ADDRESSES: You may submit comments by either of the following methods:

- Federal eRulemaking Portal: Go to *http://www.regulations.gov* and, in the ''Search for Open Regulations'' box, select ''Animal and Plant Health Inspection Service'' from the agency drop-down menu, then click on ''Submit.'' In the Docket ID column, select APHIS–2005–0106 to submit or view public comments and to view supporting and related materials available electronically. After the close of the comment period, the docket can be viewed using the ''Advanced Search'' function in Regulations.gov.
- Postal Mail/Commercial Delivery: Please send four copies of your comment (an original and three copies) to Docket No. APHIS–2005–0106, Regulatory Analysis and Development, PPD, APHIS, Station 3A–03.8, 4700 River Road, Unit 118, Riverdale, MD 20737–1238. Please state that your comment refers to Docket No. APHIS–2005–0106.

Public Hearings: Public hearings regarding this rule will be held at the following locations:

1. Seattle, WA: Seattle Renaissance Hotel, 515 Madison Street, Seattle, WA.
2. Los Angeles, CA: The Westin Los Angeles Airport, 5400 West Century Boulevard, Los Angeles, CA.
3. Miami, FL: Hilton Miami Airport, 5101 Blue Lagoon Drive, Miami, FL.
4. Washington, DC: USDA Jamie L. Whitten Building, 1400 Independence Avenue, SW., Washington, DC.

Reading Room: You may read any comments that we receive on this docket in our reading room. The reading room is located in room 1141 of the USDA South Building, 14th Street and Independence Avenue, SW., Washington, DC. Normal reading room hours are 8 a.m. to 4:30 p.m., Monday through Friday, except holidays. To be sure someone is there to help you, please call (202) 690–2817 before coming.

Other Information: Additional information about APHIS and its programs is available on the Internet at *http://www.aphis.usda.gov*.

FOR FURTHER INFORMATION CONTACT: Regarding the proposed commodity import request evaluation process, contact Mr. Matthew Rhoads, Planning, Analysis, and Regulatory Coordination, PPQ, APHIS, 4700 River Road, Unit 141, Riverdale, MD 20737; (301) 734–8790.

Regarding import conditions for particular commodities, contact Ms. Donna L. West, Senior Import Specialist, Commodity Import Analysis and Operations, PPQ–PRI, APHIS, 4700 River Road, Unit 133, Riverdale, MD 20737; (301) 734–8758.

SUPPLEMENTARY INFORMATION:

Public Hearings

We are advising the public that we are hosting four public hearings on this proposed rule. The first public hearing will be held in Seattle, WA, on Tuesday, May 23, 2006 from 9 a.m. to 1 p.m., local time. The second public hearing will be held in Los Angeles, CA, on Wednesday, May 24, 2006, from 1 p.m. to 5 p.m., local time. The third public hearing will be held in Miami, FL, on Friday, May 26, 2006, from 9 a.m. to 1 p.m., local time. The fourth public hearing will be held in Washington, DC, on June 20, 2006, from 9 a.m. to 1 p.m., local time.

A representative of the Animal and Plant Health Inspection Service will preside at the public hearings. Any interested person may appear and be heard in person, by attorney, or by other representative. Written statements may be submitted and will be made part of the hearing record. A transcript of the public hearings will be placed in the rulemaking record and will be available for public inspection.

The purpose of the hearings is to give interested persons an opportunity for presentation of data, views, and arguments. Questions about the content of the proposed rule may be part of the commenters' oral presentations. However, neither the presiding officer nor any other representative of APHIS will respond to comments at the hearings, except to clarify or explain provisions of the proposed rule.

The presiding officer may limit the time for each presentation so that all interested persons appearing at each hearing have an opportunity to participate. Each hearing may be terminated at any time if all persons desiring to speak and that are present in the hearing room have been heard.

Registration for the hearings may be accomplished by registering with the presiding officer 30 minutes prior to the scheduled start of each hearing. Persons who wish to speak at a hearing will be asked to sign in with their name and organization to establish a record for the

hearing. We ask that anyone who reads a statement provide two copies to the presiding officer at the hearing.

Persons wishing to speak at one or both of the public hearings may register in advance by phone or e-mail. Persons wishing to register by phone should call the Regulatory Analysis and Development voice mail at (301) 734–8138. Callers must leave a message clearly stating (1) the location of the hearing the registrant wishes to speak at, and (2) the registrant's name and organization. Persons wishing to register by e-mail must send an e-mail with the same information described above to *http://ppq.public.hearings@aphis.usda.gov*. Please write the location of the hearing you wish to attend in the subject line. Advance registration for the hearings must be received by 3 p.m. on the day prior to the hearing you wish to attend. Additional information on the hearings, including parking information, can be found on the Internet at *http://www.aphis.usda.gov/ppq/Q56*.

If you require special accommodations, such as a sign language interpreter, please contact the person listed under **FOR FURTHER INFORMATION CONTACT**.

Background

Under the regulations in ''Subpart—Fruits and Vegetables'' (7 CFR 319.56 through 319.56–8, referred to below as the regulations or the fruits and vegetables regulations) the Animal and Plant Health Inspection Service (APHIS) of the U.S. Department of Agriculture (USDA or the Department) prohibits or restricts the importation of fruits and vegetables into the United States from certain parts of the world to prevent plants pests from being introduced into and spread within the United States.

In this document, we are proposing to revise and reorganize the fruits and vegetables regulations to consolidate requirements of general applicability and eliminate redundant requirements, update terms and remove outdated requirements and references, update the regulations that apply to importations of fruits and vegetables into U.S. territories, and make various editorial and nonsubstantive changes to regulations to make them easier to use. We are also proposing to make substantive changes to the regulations, including: (1) Establishing criteria within the regulations that, if met, would allow APHIS to approve certain new fruits and vegetables for importation into the United States and to acknowledge pest-free areas in foreign countries more effectively and expeditiously; (2) doing away with the process of listing, in the regulations, specific commodities that may be imported subject to certain types of phytosanitary measures; and (3) providing for the issuance of special use permits for fruits and vegetables. These changes are necessary to simplify and expedite the APHIS processes for approving new imports and pest-free areas while continuing to allow for public participation in the process. This proposal, if adopted, would represent a significant structural revision of the regulations, and would establish a new process for approving certain new commodities for importation into the United States. It would not, however, allow the importation of any specific new fruits or vegetables, nor would it alter the conditions for importing currently approved fruits or vegetables except as specifically described in this document.

The Current Regulations

Currently, the regulations prohibit the importation into the United States of fruits and vegetables covered by the subpart,[1] unless the regulations specifically allow the importation of the particular fruit or vegetable.

The regulations can be roughly divided into two categories: Requirements of general applicability (contained in §§ 319.56 through 319.56–2 and §§ 319.56–3 through 319.56–8) and commodity-specific requirements (contained in §§ 319.56–2a through 319.56–2oo).

Under the regulations, all approved fruit and vegetable imports are subject to some type of restriction to ensure that the imported fruit or vegetable does not act as a pathway for the introduction of plant pests or noxious weeds into the United States. These restrictions are known as phytosanitary measures, and include any activities that have the effect of reducing the plant pest risk posed by an imported fruit or vegetable.

In nearly all cases, more than one phytosanitary measure must be applied to each type of imported fruit or vegetable for the commodity to be allowed importation into the United States. In the most typical scenario, fruits and vegetables must be imported under permit and are subject to inspection, and, if necessary, treatment, at the port of first arrival in the United States. These requirements are referred to elsewhere in this document as universal requirements. A partial list of commodities that may be imported under these conditions may be found in § 319.56–2t of the current regulations. Other commodities must always be treated for pests before arriving at a U.S. port of entry, in addition to meeting these universal requirements. A partial list of such commodities may be found in § 319.56–2x of the current regulations.[2] Certain other fruits and vegetables must meet additional requirements (in some cases, called ''systems approaches'') to be eligible for importation into the United States. Such measures include sampling regimens, pest surveys, packing requirements, and other measures determined to be necessary to mitigate the pest risk posed by the particular commodity. Requirements for importing these commodities may be found in §§ 319.56–2a through 319.56–2oo.

Proposed Revisions

Reorganization of the Regulations and Consolidation of Similar Provisions

In this document, we are proposing to reorganize the regulations to make them easier to understand and use. Specifically, we are proposing to consolidate all requirements of general applicability into one section (proposed § 319.56–3, ''General requirements for all imported fruits and vegetables''). Currently, general requirements are located in various sections (§§ 319.56 through 319.56–2 and 319.56–3 through 319.56–8) of the regulations, and several such provisions are repeated throughout the commodity-specific sections (§§ 319.56–2a through 319.56–2oo). If this proposal is adopted, all requirements of general applicability would be located at the beginning of the regulations, followed by all commodity-specific requirements, and redundant references to general requirements that are contained in commodity specific regulations would be removed.

In order to facilitate review of this proposal, which, if adopted, would relocate all current provisions to new sections within the regulations, we have prepared a cross-reference table that links the current provisions with the proposed provisions. The cross reference document may be viewed on the Regulations.gov Web site (see **ADDRESSES** above for instructions for accessing Regulations.gov.) and may be obtained by contacting the person listed under **FOR FURTHER INFORMATION CONTACT**. The cross reference document may also be viewed in our reading room

[1] The importation of citrus fruits is regulated under Subpart—Citrus Fruit (§ 319.28).

[2] Some commodities listed in §§ 319.56–2t and 319.56–2x require additional phytosanitary measures beyond requirements that they be imported under permit and are subject to inspection at the port of first arrival in the United States. Such requirements include special box markings and phytosanitary certifications by foreign national plant protection organizations.

(information on the location and hours of the reading room is provided under the heading **ADDRESSES** at the beginning of this proposed rule). Further, for ease of reference, we provide the following outline of the proposed revision:

Requirements of General Applicability

§ 319.56–1 *Notice of quarantine.*
§ 319.56–2 *Definitions.*
§ 319.56–3 *General requirements for all imported fruits and vegetables.*
(a) *Freedom from plants and portions of plants.*
(b) *Permit.*
(c) *Ports of entry.*
(d) *Inspection, treatment, and other requirements.*
(e) *Costs and charges for APHIS services.*
(f) *Responsibility for damages arising from quarantine actions or procedures.*
§ 319.56–4 *Approval of certain fruits and vegetables for importation.*
(a) *Determination by the Administrator.*
(b) *Designated phytosanitary measures.*
(c) *Fruit and vegetables authorized importation under this section.*
(d) *Amendment of import requirements.*
§ 319.56–5 *Pest-free areas.*
§ 319.56–6 *Trust fund agreements.*
§ 319.56–7 *Territorial applicability and exceptions.*
§§ 319.56–8 through 319.56–9 [*Reserved*]

Commodity-Specific Requirements

§ 319.56–10 *Importation of fruits and vegetables from Canada.*
§ 319.56–11 *Importation of dried, cured, or processed fruits, vegetables, nuts, and legumes.*
§ 319.56–12 *Importation of frozen fruits and vegetables.*
§ 319.56–13 *Additional requirements for certain fruits and vegetables.*
§§ 319.56–14 through 319.56–19 [*Reserved*]
§ 319.56–20 *Apples and pears from Australia (including Tasmania) and New Zealand.*
§ 319.56–21 *Okra from certain countries.*
§ 319.56–22 *Apples and pears from certain countries in Europe.*
§ 319.56–23 *Apricots, nectarines, peaches, plumcot, and plums from Chile.*
§ 319.56–24 *Lettuce and peppers from Israel.*
§ 319.56–25 *Papayas from Central America and Brazil.*
§ 319.56–26 *Melon and watermelon from certain countries in South America.*
§ 319.56–27 *Fuji variety apples from Japan and the Republic of Korea.*
§ 319.56–28 *Tomatoes from certain countries.*
§ 319.56–29 *Ya variety pears from China.*
§ 319.56–30 *Hass avocados from Michoacan, Mexico.*
§ 319.56–31 *Peppers from Spain.*
§ 319.56–32 *Peppers from New Zealand.*
§ 319.56–33 *Mangoes from the Philippines.*
§ 319.56–34 *Clementines from Spain.*
§ 319.56–35 *Persimmons from the Republic of Korea.*
§ 319.56–36 *Watermelon, squash, cucumber, and oriental melon from the Republic of Korea.*
§ 319.56–37 *Grapes from the Republic of Korea.*
§ 319.56–38 *Clementines, mandarins, and tangerines from Chile.*
§ 319.56–39 *Fragrant pears from China.*
§ 319.56–40 *Peppers from certain Central American countries.*

Relocation of Treatment Schedules and Other Treatment-related Provisions to Part 305

APHIS recently amended the regulations in 7 CFR part 305 by listing in that part treatment schedules for imported fruits and vegetables and other requirements for certifying facilities and conducting treatments (see 70 FR 33264–33326, Docket No. 02–019–1). Prior to that amendment, treatment schedules were contained in the Plant Protection and Quarantine (PPQ) Treatment Manual, which was incorporated by reference into the regulations at 7 CFR 300.1.

The fruits and vegetables regulations also contain some treatment schedules for certain imported fruits and vegetables. In some cases, the schedules are the same as treatments now listed in part 305. In other cases, the schedules are somewhat different than the treatments specified in part 305. The discrepancies resulted from changes being made in the past to the PPQ Treatment Manual without corresponding changes being made to the fruits and vegetables regulations. In this document, we are proposing to remove treatment schedules from the fruits and vegetables regulations, as all current treatments for fruits and vegetables are correctly set out in part 305.[3]

The table below contains a list of treatment schedules currently contained in the fruits and vegetables regulations, as well as the identification number of appropriate treatment schedule for the given commodity that is currently listed in part 305. Again, under this proposal, all treatment schedules contained in the fruits and vegetables regulations would be removed, and treatment of affected commodities would have to be conducted in accordance with part 305.

Commodity	Origin	Pests	Treatment type	Location of treatment in subpart—fruits and vegetables	Applicable treatment in part 305
Acorns and chestnuts.	All except Canada and Mexico.	*Curculio elephas* (Cyllenhal) and *C. nucum* Linnaeus; the nut fruit tortrix, *et al., Cydia splendana* (Hubner), *Cydia* spp., and *Hemimene juliana* (Curtis); and other insect pests of chestnuts and acorns.	Methyl bromide normal atmospheric pressure (NAP).	319.56–2b(a)(3)(i) and 319.56–2b(a)(3)(iii).	T–101–t–1.
Acorns and chestnuts.	All except Canada and Mexico.	Same as above	Methyl bromide (26″ vacuum).	319.56–2b(a)(3)(ii)	T–101–u–1.
Yams	All (except Japan)	Internal and external feeders	Methy bromide (NAP).	319.56–21–(a)(2)	T–101–f–3.
Avocados	Medfly-, melon fly-, and Oriental fruit fly-infested areas.	Medfly, melon fly (*Batcrocera cucurbitae*), Oriental fruit fly (*b. dorsalis*).	Methyl bromide (NAP) and cold treatment.	319.56–2o	T–108–a.
Okra	Mexico, West Indies, South America.	Pink bollworm (*Pectinophora gossypiella*).	Methyl bromide (NAP).	319.56–2p(b)(3)	T–101–p–2.

[3] The methyl bromide treatment schedule for cherimoyas from Chile that is listed in current § 319.56–2z is not longer in use, and would be removed.

Commodity	Origin	Pests	Treatment type	Location of treatment in subpart—fruits and vegetables	Applicable treatment in part 305
Cherimoya	Chile	Chilean false spider mite of grapes.	Methyl bromide (NAP), soapy water and wax.	319.56–2z(a)(1)	Methyl bromide: N/A; soapy water and wax: T–102–b.
Mangoes	Philippines	*Bactrocera* spp. fruit flies	Vapor heat	319.56–2ii(b)	T–106–d–1.

Also, under § 319.56–2(k) of the current regulations, treatment by irradiation in accordance with part 305 may be substituted for other treatments in part 305 for one or more of the plant pests listed in § 305.31(a). Since the proposed regulations would provide that certain commodities be treated in accordance with an approved treatment listed in part 305 of the regulations, we are proposing to remove the provisions in § 319.56–2(k) regarding the use of irradiation, as the use of that treatment is covered under part 305.

Further, current § 319.56–2n provides that fumigation with methyl bromide at normal atmospheric pressure followed by refrigerated storage in accordance with part 305 is an approved treatment for the Medfly, the oriental fruit fly, and the grape vine moth, and for certain pests of grapes and other fruit from Chile. Since all provisions contained in current § 319.56–2n would remain in force under other sections in the revised regulations (as described in the cross reference document), current § 319.56–2n is redundant and would be removed.

In addition to proposing to remove treatment schedules, we are also proposing to move to part 305 other provisions of the fruits and vegetables regulations that pertain to treatments. Specifically, we are proposing to move to § 305.15 the provisions contained in current § 319.56–2d, which pertain to the importation of cold treated fruits and vegetables. Current § 305.15 already contains requirements related to the cold treatment of fruits and vegetables. Any provisions contained in current § 319.56–2d that are not already present in § 305.15 would be moved into § 305.15. The cross reference document shows where the current provisions in § 319.56–2d would be located in proposed § 305.15.

Many sections of the fruits and vegetables regulations require treatments to be monitored by an inspector (as defined in current § 319.56–1). We are proposing to remove these provisions from the fruits and vegetables regulations, and consolidate them into one new section in part 305. Under this proposal, the regulations in a new § 305.3, ''Monitoring and certification of treatments,'' would require that all treatments approved under part 305 be subject to monitoring and verification by APHIS. This change would not represent a change in program operations.

Further, we would add provisions to § 305.3 to make clear the existing requirement that any approved treatment listed in part 305 that is performed outside the United States must be monitored and certified by APHIS or an official from the plant protection service of the exporting country. We would also clarify the current requirement that all consignments of agricultural commodities that are treated outside the United States to be accompanied by a phytosanitary certificate issued by an official of the plant protection service of the exporting country certifying that treatment was applied in accordance with APHIS regulations. We would require that the phytosanitary certificate be provided to APHIS when the commodity is offered for entry into the United States. We would also require that the commodities must be stored and handled during the entire interval between treatment and export in a manner that prevents any infestation by plant pests and noxious weeds. These changes are necessary to ensure commodities are treated in accordance with APHIS requirements and to help ensure that they arrive in the United States free of quarantine pests.

Section-by-Section Discussion of Additional Amendments

Additional proposed amendments to the regulations are discussed below, by proposed section.

Notice of Quarantine (Proposed § 319.56–1)

Current § 319.56, also titled ''Notice of quarantine,'' prohibits the importation of fruits and vegetables except as specifically provided in the fruits and vegetables regulations or in regulations elsewhere in part 319. Proposed § 319.56–1 would replace existing § 319.56, and would describe the authority the Secretary of Agriculture has to regulate the importation of fruits and vegetables.[4] Proposed § 319.56–1 would also continue to prohibit the importation of fruits and vegetables into the United States, except as provided in the fruits and vegetables regulations or elsewhere in part 319.

Definitions (Proposed § 319.56–2)

The current list of definitions for terms used in the regulations is contained in § 319.56–1. Under this proposal, the list would be moved to § 319.56–2. We are proposing to remove, revise, and relocate definitions for several terms currently defined in § 319.56–1 and elsewhere in the regulations, as well as to add several new definitions. All the new and revised definitions may be found in § 319.56–2 in the rule portion of this document.

Specifically, we are proposing to add definitions for *commodity*, *consignment*, *lot*, *national plant protection organization, phytosanitary certificate*, and *phytosanitary measure*. These additional definitions, which will clarify the meaning of terms used in context of the revised regulations, can be viewed in the rule portion of this document.

We are proposing to remove definitions for *general written permit* and *specific written permit*. Those definitions would be removed because the distinction between the two would no longer apply under the proposed regulations in § 319.56–3(b). See the discussion of permits under § 319.56–3 later in this document for additional explanation.

We are proposing to replace the current definitions for *commercial shipment* with a definition for *commercial consignment* in order to eliminate confusion over what constitutes a ''shipment'' at the port of entry into the United States. We would also add a definition for the term *noncommercial consignment*. Since the term *consignment* has been defined in the context of international trade

[4] The Secretary of Agriculture has delegated authority for the formulation, direction, and supervision of APHIS policies, programs, and activities to the Administrator of APHIS.

agreements, we would use that term in the regulations.

We are also proposing to move the definition for *West Indies* found in § 319.56–2p of the current regulations into proposed § 319.56–2.

General Requirements for All Imported Fruits and Vegetables (Proposed § 319.56–3)

As explained earlier in this document, we are proposing to consolidate all existing general requirements for imported fruits and vegetables into § 319.56–3. These requirements include provisions that pertain to:

- Freedom of imported fruits and vegetables from plant debris;
- Permits;
- Ports of entry;
- Inspection, treatment, and/or other requirements at the port of first arrival;
- Costs and charges for APHIS services; and
- Responsibility for damages arising from quarantine actions or procedures.

The current provisions for these requirements are contained in §§ 319.56–2 and 319.56–3 through 319.56–8. We propose to amend the current general requirements as follows:

Freedom From Plant Debris

Under current § 319.56–2(a), imported fruits and vegetables must be free from plant debris, as that term is defined in the regulations. This provision would remain unchanged under this proposal and would be relocated in proposed § 319.56–3.

Permits

Current § 319.56–3 states that, except for fruits or vegetables that may be imported under the general written permit provided in § 319.56–2(b), (c), and (d), or for fruits and vegetables imported under an oral permit in accordance with § 319.56–3(d), no fruits or vegetables may be imported unless a specific written permit has been issued for the fruits or vegetables and unless the fruits or vegetables meet all other applicable requirements of the regulations and any other requirements specified by APHIS in the specific written permit.

We believe the distinction between specific and general written permits is unnecessarily confusing, since general written permits simply authorize, in the text of the regulations, the importation of the following commodities without a specific written permit:

- Certain dried, cured, or processed fruits and vegetables (except frozen fruits and vegetables);
- Certain fruits and vegetables grown in Canada; and
- Certain fruits and vegetables grown in the British Virgin Islands that are imported into the U.S. Virgin Islands.

Therefore, we are proposing to amend the regulations pertaining to permits to state that the commodities described above may be imported without a permit, while all other fruits and vegetables must be imported under permit, in accordance with proposed § 319.56–3(b). The current provisions for importations under oral permits would still apply under proposed § 319.56–3(b)(4).

Other current provisions regarding application for permits; issuance of permits; amendment, denial, or withdrawal of permits; and appeals (contained in current §§ 319.56–3 and 319.56–4) would be relocated in paragraphs (b)(2), (b)(3), (b)(5), and (b)(6) of proposed § 319.56–3. The provisions for applying for permits would also be updated to reflect the various means (mail, fax, Internet) now available for applying for permits.

In this document, we are also proposing to add new provisions to the regulations that would authorize APHIS to issue special use permits that authorize the importation of small lots of fruits or vegetables that are otherwise prohibited importation under the regulations, provided that the fruits or vegetables:

- Are not intended for commercial distribution;
- Are to be imported, transported, stored, or held under specific conditions that the Administrator has determined will mitigate the pest risk posed by the imported fruits or vegetables to the extent practicable; and
- Are to be consumed, disposed of, destroyed, or re-exported at a time and in a manner and place ordered by an inspector or as specified in the permit.

These provisions would be contained in proposed § 319.56–3(b)(7), and would provide for the importation of fruits and vegetables for special events such as trade shows, for diplomatic presentations, and for scientific research. In each case, such imports would only be allowed under strict conditions approved by the Administrator to address the particular risk posed by the particular imported fruit or vegetable.

Ports of Entry

Some of the current commodity-specific sections of the regulations specify the ports of entry into which particular commodities may be imported. We propose to remove those provisions and combine them into one general provision, to be contained in proposed § 319.56–3(c). Proposed § 319.56–3(c) would provide that ports of entry include only those listed in the regulations of the Department of Homeland Security's Bureau of Customs and Border Protection (CBP) in 19 CFR 101.3(b)(1), and that fruits and vegetables will be required to be imported through specific ports only if so required under Subpart—Fruits and Vegetables or part 305, or if so required under the conditions of a permit issued for the importation of the particular fruit or vegetable. This section would also make it clear that fruits and vegetables that are to be treated for exotic fruit flies at ports in the United States may only be imported into certain ports, as provided in proposed § 305.15. Provisions for these requirements are contained in § 319.56–2d of the current regulations.

Inspection, Treatment, and Other Requirements

Requirements currently contained in current § 319.56–6 pertaining to the arrival of fruits and vegetables at ports of entry, inspection and treatment of such fruits and vegetables, notice of actions ordered by an inspector, refusal of entry, and release for movement would be relocated in proposed § 319.56–3(d). The current provisions in § 319.56–5 overlap with the provisions of § 319.56–6 and other sections, and would be removed.

Current § 319.56–7 authorizes inspectors to cooperate with Customs inspectors in the examination of all baggage or other personal belongings of passengers or members of crews of vessels or other carriers whenever such examination is deemed necessary for the purpose of enforcing the regulations with respect to the entry of any prohibited or restricted fruits or vegetables or plants or portions of plants which may be contained in the baggage or other belongings of such persons. This provision is no longer essential for the purposes of enforcing the proposed regulations given the consolidation of APHIS and Customs inspection personnel in CBP, and as such, would be removed.

Costs and Charges for APHIS Services

Current § 319.56–6 provides that APHIS will be responsible only for the costs of providing the services of an inspector during regularly assigned hours of duty and at the usual places of duty, and that the owner of imported fruits or vegetables is responsible for all additional costs of inspection, treatment, movement, storage, or destruction ordered by an inspector under the regulations, including any labor, chemicals, packing materials, or

other supplies required. Similar provisions regarding costs and charges are contained in commodity-specific requirements in §§ 319.56–2a through 319.56–2oo. In this document, we are proposing to consolidate all provisions pertaining to costs and charges for inspection services into proposed § 319.56–3(e). This change would not affect program operations in any way, and would eliminate redundant text from the regulations.

Responsibility for Damages Arising From Quarantine Actions or Procedures

Some of the commodity-specific sections in §§ 319.56–2a through 319.56–2oo provide that USDA assumes no responsibility for any damage to imported fruits or vegetables that results from treatments required under the regulations. In this document, we are proposing to consolidate all provisions pertaining to responsibility for damages into proposed § 319.56–3(f). Again, this change would not affect program operations in any way and would eliminate redundant text from the regulations.

Approval of Certain Fruits and Vegetables for Importation (Proposed § 319.56–4)

Current § 319.56–2(e) provides that any other fruit or vegetable, except those restricted to certain countries and districts by special quarantine,[5] other orders, or provisions of the fruits and vegetables regulations[6] may be imported from any country under a permit issued in accordance with the fruits and vegetables regulations if APHIS, after reviewing evidence presented to it, is satisfied that the fruit or vegetable either:

- Is not attached in the country of origin by quarantine pests;
- Has been treated or is to be treated for all quarantine pests that exist in the country of origin, in accordance with conditions and procedures that may be prescribed by the Administrator;
- Is imported from a definite area or district in the country of origin that is free from all quarantine pests that attack the fruit or vegetable and its importation is in compliance with the criteria of § 319.56–2(f); or
- Is imported from a definite area or district of the country of origin that is free from quarantine pests that attack the fruit or vegetable and the criteria of § 319.56–2(f) are met with regard to those quarantine pests, provided that all other quarantine pests that attack the fruit or vegetable in the area or district of the country of origin have been eliminated from the fruit or vegetable by treatment or any other procedures that may be prescribed by the Administrator.

In short, the regulations in § 319.56–2(e) provide that APHIS may authorize the importation of a fruit or vegetable by simply issuing a permit once it is satisfied that the criteria in that paragraph have been met; those regulations do not envision that the fruit or vegetable would have to be specifically listed in the regulations in order to be eligible for entry. Until 1987, APHIS used those provisions in that manner, issuing permits to authorize the entry of eligible fruits and vegetables without adding those commodities to the regulations.[7]

However, in 1987, in order to increase the transparency of our decisionmaking with respect to the importation of fruits and vegetables, we elected to begin listing all newly approved fruits and vegetables in the regulations through notice-and-comment rulemaking.[8] This approach has afforded the public the opportunity to comment on the proposed importation of hundreds of commodities over the years. However, the number of requests we receive from foreign exporters and domestic importers to amend the regulations has been steadily increasing since 1987, and we have concluded that a different approach will be necessary if we are to keep pace with the volume of import requests. We believe this new approach, which is described in detail below, will enable us to be more responsive to the import requests of our trading partners while preserving the transparency afforded by the approach we initiated in 1987.

Using our current process, in order for an additional fruit or vegetable to be approved for importation, APHIS, after receiving the import request, first gathers information on the commodity and then performs a pest risk analysis. The pest risk analysis usually contains two main components: (1) A risk assessment, to determine what pests of quarantine significance are associated with the proposed import and which of those are likely to follow the import pathway, and (2) a risk management analysis, to identify phytosanitary measures that could be applied to the proposed import and evaluate the potential effectiveness of those measures. When the risk analysis is complete, APHIS may then propose to allow the importation of the commodity through a proposed rule published in the **Federal Register**. Following its evaluation of public comments on the proposal and any other supporting documentation, APHIS may then issue a final rule that specifically lists the fruit or vegetable, and any applicable phytosanitary measures, in the regulations. The results of a pest risk analysis may also reveal that the risks posed by a proposed import cannot be sufficiently mitigated for a variety of reasons, and such imports continue to be prohibited importation into the United States.

The current process for approving new imports takes a significant period of time, ranging on average from 18 months to over 3 years (beginning with the initial request and ending with the publication of a final rule). In this document, we are proposing to establish a regulatory approach that would allow APHIS to approve or reject certain fruits and vegetables for importation without specific prior rulemaking (as was the case prior to 1987), but in a manner that (unlike our process prior to 1987) would provide for public review and comment on the scientific documentation on which such decisions would be based. The process, which would be codified in proposed § 319.56–4 (see the rule portion of this document), would require the publication of notices in the **Federal Register** to advise the public of the findings of pest risk analyses, and would invite comment on those analyses prior to authorizing any imports.

We believe the proposed process would measurably speed up the evaluation and approval or denial of a large number of requests to import additional fruits and vegetables, while continuing to provide opportunity for public analysis of and comment on the science associated with such imports.

This proposed process for approving imports would apply only to commodities that, based on the findings of risk analysis, we determine can be safely imported subject to one or more of the following phytosanitary measures, which are referred to

[5] The imporation of citrus fruits into the United States from eastern and southeastern Asia and certain other areas is restricted by Subpart—Citrus Fruit, § 319.28.

[6] Fruits and vegetables from designated countries or localities that are subject to commodity-specific import requirements prescribed in the fruits and vegetables regulations are not subject to the regulations in § 319.56–2(e) unless specified otherwise. Such fruits and vegetables are, however, subject to all other general requirements contained in the fruits and vegetables regulations.

[7] A comprehensive list of fruits and vegetables that are approved for importation, including those authorized importation under the provisions of § 319.56–2(e) but that are not specifically listed in the regulations, may be found in the APHIS's manual ''Regulating the Importation of Fruits and Vegetables.'' The manual is posted on the Internet at *http://www.aphis.usda.gov/ppq/manuals/port/FV_Chapters.htm*.

[8] The first rule issued under this policy was finalized on November 19, 1992 (see 57 FR 54485–54492, Docket No. 88–143–2).

elsewhere in this document as designated measures:

- Inspection upon arrival in the United States and subject to other general requirements of proposed § 319.56–3; and
- Certified origin from a pest-free area in the country of origin in accordance with revised § 319.56–5; and/or
- Treatment for pest(s) in accordance with part 305; and/or
- Inspection and certification that commodity is pest free in the country of origin by the national plant protection organization (NPPO) of the exporting country.

The importation of fruits and vegetables that require additional phytosanitary measures beyond one or more of the designated measures cited above would continue to require specific prior rulemaking. For ease of discussion in this document, we refer to the proposed streamlined process as the ''notice-based process'' and the existing process as the ''rulemaking-based process.'' A flowchart to describe the process for considering and evaluating commodity import requests under the proposed regulations is shown as figure 1. Note that the determination as to which process to follow (rulemaking or the notice-based process) would be based exclusively on the conclusions of risk analysis.

BILLING CODE 3410–34–P

Figure 1. - Import request evaluation process.

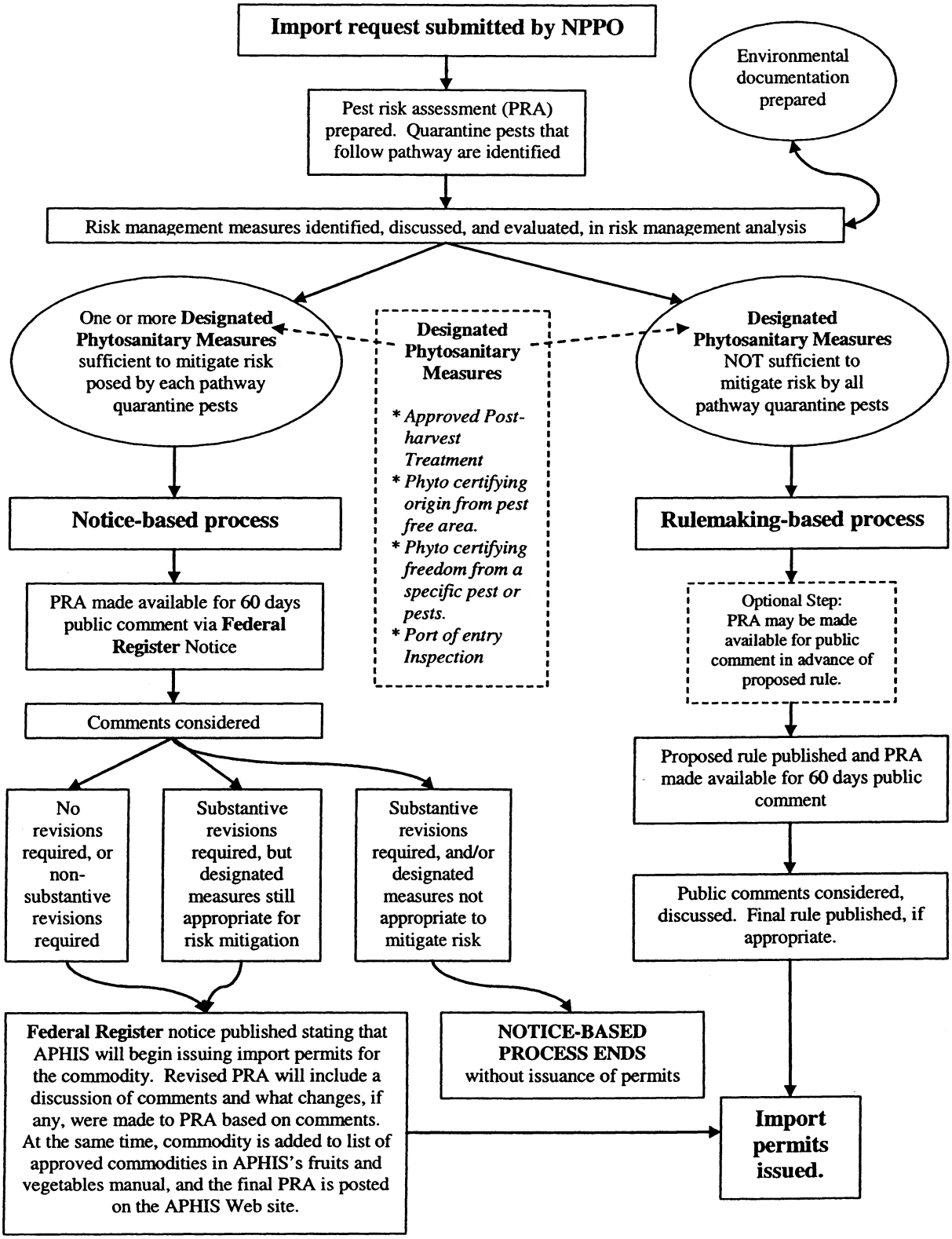

BILLING CODE 3410–34–C

Using the proposed process, when APHIS receives a request from an NPPO [9] to allow importation of an additional commodity, it would gather information on the commodity and conduct a pest risk assessment.[10] When the assessment is complete, if quarantine pests are associated with the commodity in the country or other region of origin [11], we would evaluate whether the risk posed by each quarantine pest can be mitigated by one or more of the designated measures cited previously in this document.[12] If the designated measures alone are not sufficient to mitigate the risk posed by the import—*i.e.,* if additional risk mitigation is required beyond one or more of the designated phytosanitary measures—any further action on approving the commodity for importation would be undertaken using the rulemaking-based process for evaluating new imports. However, if APHIS determines in a risk management analysis that the risk posed by each identified quarantine pest associated with the fruit or vegetable in the country or other region of origin can be mitigated by one or more of the designated measures, our findings would be communicated using the notice-based process; APHIS would publish in the **Federal Register,** for a minimum of 60 days public comment, a notice announcing the availability of the pest risk analysis. Each pest risk analysis made available for public comment will specify which of the designated phytosanitary measures would be required to be applied by APHIS.

The following is a selection of commodities that have been approved for importation by APHIS since 2002. Had the proposed regulations been in place since that time, commodities in the left column would have been evaluated for approval using the notice-based process, while commodities in the right column would have been evaluated for approval via rulemaking. Note that this list is not comprehensive; not all recently approved commodities are listed.

Notice-based process candidates	Rulemaking required
Blueberries from South America (70 FR 16431)	Peppers from Central America (71 FR 11288).
Peppers from Chile (67 FR 61547)	Fragrant Pears from China (70 FR 76133).
Basil from Honduras (67 FR 61547)	Papayas from Brazil and Central America (70 FR 16431).
Longans from China (67 FR 61547)	Citrus from Chile (69 FR 71691).
Persimmon from Spain (67 FR 61547)	Hass avocados from Mexico (69 FR 69748).
Fig from Mexico (67 FR 61547)	Grapes from the Republic of Korea (68 FR 70448).
Citrus from Australia (67 FR 61547)	Clementines from Spain (67 FR 64702).

Under the streamlined process, APHIS would evaluate comments received in response to our notice of availability of the risk analysis. In the event that we receive no comments, or in the event that commenters do not provide APHIS with analysis or data to reveal that the conclusions of the pest risk analysis are incorrect and that changes to the pest risk analysis are necessary, APHIS would then publish another notice in the **Federal Register** announcing that the Administrator has determined that, based on the information available, the application of one or more of the designated measures described above (and as specified in a given pest risk analysis) is sufficient to mitigate the risk that plant pests or noxious weeds could be introduced into or disseminated within the United States via the imported fruit or vegetable. APHIS would begin issuing import permits for the particular commodity, subject to the conditions described in the pest risk analysis, beginning on the date the **Federal Register** notice is published.

In the event that commenters provide APHIS with analysis or data that reveals that changes to the pest risk analysis are necessary, and if the changes made affect the conclusions of the analysis (*i.e.,* that inspection and origin from a pest-free area and/or treatment are not sufficient to mitigate the risk posed by the identified pests), APHIS would proceed as follows:

- If additional phytosanitary measures beyond the designated measures described earlier in this document are determined to be necessary to mitigate the risk posed by the particular imported fruit or vegetable to the extent practicable, as determined by the Administrator, any further action on the commodity would follow the rulemaking-based process.
- If additional risk mitigation beyond the measures evaluated in the pest risk analysis is determined to be required, but the measures still only include one or more of the designated measures described earlier in this document, APHIS may publish another notice announcing that the Administrator has determined that, based on the information available, the application of one or more of the designated measures described earlier in this document is sufficient to mitigate the risk that plant pests or noxious weeds could be introduced into or disseminated within the United States via the imported fruit or vegetable. APHIS would begin issuing import permits for the particular commodity, subject to the conditions described in the revised pest risk analysis, beginning on the date specified in the **Federal Register** notice. Alternately, if APHIS believes that the revisions to the pest risk analysis are substantial, and that there may be continued uncertainty as to whether the designated measures are sufficient to mitigate the risk posed by the fruit or vegetable, APHIS may elect to make the revised risk analysis available for public comment via a notice in the **Federal Register,** or may make any further action on approving the commodity for importation subject to rulemaking.

Note that APHIS does not set policy or regulatory requirements based on issues of economic competitiveness; our authority is tied to risk, and therefore our decisionmaking is based on an analysis of risk. While the proposed process would not preclude the submission of comments regarding

[9] All requests to allow the importation of a currently prohibited fruit or vegetable into the United States must be submitted by the NPPO of the exporting country to be considered by APHIS.

[10] On October 28, 2004, we published in the **Federal Register** (69 FR 62823–62829, Docket No. 02–132–1) a proposal to amend the regulations by establishing regulations governing the submission of requests to change the part 319 import regulations. The proposed regulations were designed to help ensure that foreign NPPOs provide us with the information we need to prepare a risk analysis and/or other analyses that evaluate the risks and other effects associated with a proposed change to the regulations. Final action on that proposal is pending.

[11] Risk analyses could consider a country, part of a country, or all or parts of several countries.

[12] If no quarantine pests are identified in the PRA as likely to follow the pathway, a detailed risk management analysis would likely not be performed, but the importation of the commodity would still be subject to the general requirements of proposed § 319.56–3.

issues unrelated to risk, comments on issues such as economic competitiveness (*e.g.*, comments that the proposed import would result in decreased sales for domestic producers of the same commodity) would not merit a detailed response by APHIS. This proposal would allow APHIS to focus public discussion on the analysis of pest risk, which is the primary basis for our decisionmaking. We believe this policy is consistent with the provisions of the Plant Protection Act, as well as international trade agreements.

The notice-based process would employ the use of **Federal Register** notices to communicate APHIS's consideration and approval or denial of requests that were previously only approved via rulemaking. As described above, **Federal Register** notices would be used to announce the availability of pest risk analyses for public comment. **Federal Register** notices would also be used to announce when the Administrator has determined that a particular commodity that has been subject to risk analysis and public comment can, based on the findings of pest risk analysis, be approved for importation into the United States. These notices would make clear the conditions under which such importations could occur (*i.e.*, subject to inspection, and, if necessary, origin from a pest-free area and/or treatment), and would state that APHIS will immediately begin issuing permits for the importation of the commodity. As described later in this document, these notices would also be used to make available any documentation of our consideration of the potential effects of the new imports on the environment, as required under the National Environmental Policy Act, as well as any other analyses determined by APHIS to be necessary under other Federal Statutes, such as the Endangered Species Act.

If the notice-based process is adopted for use by APHIS, we would not list commodities approved under this approach in the regulations, though such commodities would be listed in APHIS's fruits and vegetables manual and the documentation supporting their approval would be made available on the Internet; we also would remove from the regulations those listed commodities that are currently approved for importation subject to one or more of the designated measures described earlier in this document. Consequently, the lists of commodities contained in current §§ 319.56–2t and 319.56–2x would be removed, as would a number of other provisions in current commodity-specific sections in the regulations that authorize importation of specific fruits or vegetables in accordance with one or more of the designated measures.[13] The following current sections would be removed for this reason:

- § 319.56–2e, ''Administrative instructions; conditions governing the entry of cipollini from Morocco;''
- § 319.56–2g, ''Administrative instructions prescribing method of treatment of garlic from specified countries;''
- § 319.56–2h, ''Regulations governing the entry of grapes from Australia;''
- § 319.56–2i, ''Administrative instructions prescribing treatments for mangoes from Central America, South America, and the West Indies;''
- § 319.56–2k, ''Administrative instructions prescribing method of fumigation of field-grown grapes from specified countries;''
- § 319.56–2l, ''Administrative instructions prescribing method of treatment of imported yams;''
- § 319.56–2m, ''Administrative instructions prescribing method of fumigation of apricots, grapes, nectarines, peaches, plumcot, and plums from Chile;''
- § 319.56–2n, ''Administrative instructions prescribing a combination treatment of fumigation plus refrigeration for certain fruits;''
- § 319.56–2o, ''Administrative instructions prescribing method of treatment of avocados for the Mediterranean fruit fly, the melon fly, and the Oriental fruit fly;''
- § 319.56–2q, ''Administrative instructions: Conditions governing the entry of citrus from South Africa;''
- § 319.56–2v, ''Conditions governing the entry of citrus from Australia;'' and
- § 319.56–2z, ''Administrative instructions governing the entry of cherimoyas from Chile.''

Additionally, paragraphs (b) and (c) of § 319.56–2y (pertaining to the importation of cantaloupe, honeydew melons, and watermelon from Brazil and Venezuela) would also be removed for the same reason.

As explained earlier in this document, the same restrictions that currently apply under the sections listed above would continue to apply.

We recognize that removing a large number of commodities from the regulations may cause some confusion as to whether a particular commodity is approved for importation into the United States, and under what conditions. However, for many years, APHIS has maintained a fruits and vegetables manual that was designed to be a hands-on reference for our inspectors. The manual is a complete reference for all approved fruit and vegetable imports: In addition to mirroring or referencing requirements for all commodities whose importation is authorized under the regulations, the manual contains listings and requirements for fruits and vegetables that had been authorized importation prior to September 30, 1987, and that continue to be allowed importation under permit and subject to the same conditions that were applied prior to that date, but that are not specifically listed in the regulations. The manual is available for viewing on the APHIS Web site at *http://www.aphis.usda.gov/ppq/manuals/port/FV_Chapters.htm,* and is frequently used by importers and other interested persons, in addition to APHIS personnel.

Under this proposal, commodities that meet the requirements in proposed § 319.56–4 would be added to the manual, but not the regulations. Furthermore, the manual will list which of the designated measures apply to such commodities. Note that before we would publish any final rule amending the regulations as described in this document, APHIS intends to revise the manual to simplify it and make it easier to use. We are in early stages of converting the manual into a searchable database that will allow interested persons to search by commodity or by country, and that will list clearly the conditions that apply to each particular commodity from a specified country. A searchable database is already available at: *https://manuals.cphst.org/q56/Q56Main.cfm,* but we are planning to replace it with one that is easier to use and understand. We envision the revised manual as a comprehensive source for all types of users: inspectors, importers, and other members of the public.

We would also include in proposed § 319.56–4 provisions that would allow APHIS to amend import requirements or withdraw approval of particular commodities whose importation is approved under § 319.56–4. Specifically, APHIS could amend import requirements if we determine that the designated phytosanitary measures are not sufficient to mitigate the risk posed by the particular fruit or vegetable. This could occur due to interceptions of new pests in imported fruits or vegetables or the discovery of types of new evidence of risk. Under this provision, APHIS could prohibit or further restrict importation of the

[13] Some commodities listed in §§ 319.56–2g, 319.56–2t, and 319.56–2x are allowed importation subject to additional measures beyond the designated measures described earlier in this document. Those commodities would be required to be imported in accordance with proposed § 319.56–13, and would remain subject to the same restrictions as currently apply to their importation. Commodities that require such additional measures (*e.g.,* box marking or specified stages of ripeness) would continue to be authorized importation through specific rulemaking.

particular fruit or vegetable by publishing a notice in the **Federal Register** advising the public of its finding. In such cases, APHIS would take immediate action as appropriate at ports of entry, and would follow such action as quickly as practicable with notice in the **Federal Register**. The notice would specify the amended import requirements, provide an effective date for the change, and would invite public comment on the subject. It is likely that most such actions would be effective immediately, in order to address newly identified risks in timely fashion; however, if there is uncertainty as to the risk posed, APHIS may request comment on a change in import conditions prior to making such a change effective.

We would also encourage parties interested in being informed of changes to our import policies, such as those proposed in this rule, to register for APHIS''s stakeholder registry at *https://web01.aphis.usda.gov/PPQStakeWeb2.nsf*. Persons who register and who select ''plant imports'' and ''fruits and vegetables'' as topics of interest would be notified when changes to our fruit and vegetable import policies are made, including when we make import risk analyses available for comment or approve new imports using the proposed process.

Commercial Shipments

Often, pest risk analyses for the importation of new commodities consider only the risks posed by commercially produced and shipped fruit; non-commercial shipments may pose an entirely different pest risk than commercial shipments. Currently, and as indicated elsewhere in this document (see proposed § 319.56–13), many fruits and vegetables may only be imported in commercial shipments for that reason. We are inviting comment on whether we should add ''commercial shipments only'' as a fifth designated measure under the proposed regulations in § 319.56–4.

Pest-Free Areas (Proposed § 319.56–5)

Current § 319.56–2(e) establishes area freedom from pests as a phytosanitary measure for the purposes of the fruits and vegetables regulations. Under § 319.56–2(e), fruits and vegetables (except those for which there are commodity-specific provisions in the fruits and vegetables regulations or elsewhere in part 319) may be imported under a permit and upon compliance with the regulations, if APHIS is satisfied that the fruit or vegetable either:

- Is not attacked in the country of origin by quarantine pests;
- Is imported from a definite area or district in the country of origin that is free from all quarantine pests that attack the fruit or vegetable, and the area or district meets APHIS requirements in § 319.56–2(f) for pest freedom; or
- Is imported from a definite area or district of the country of origin that is free from quarantine pests that attack the fruit or vegetable, and the area or district meets APHIS requirements in § 319.56–2(f) for pest freedom, provided that all other quarantine pests that attack the fruit or vegetable in the area or district of the country of origin have been eliminated from the fruit or vegetable by treatment or any other procedures that may be prescribed by the Administrator.

Currently, APHIS-approved pest-free areas in foreign countries are listed in § 319.56–2 (h) and (j) and in various commodity-specific sections of the fruits and vegetables regulations (*e.g.*, §§ 319.56–2q, 319.56–2v, 319.56–2y, 319.56–2ii). A comprehensive list of pest-free areas that currently meet APHIS standards may be viewed on the Regulations.gov Web site (see **ADDRESSES** above for instructions for accessing Regulations.gov.).

APHIS currently recognizes changes in the pest-free status of countries via rulemaking. For example, if an area within a country where fruit flies are known to exist is determined to be free of fruit flies, in order for a fruit or vegetable that is a fruit fly host to be imported from that area without treatment or other mitigation for fruit flies, APHIS lists the specific area in the regulations as a fruit fly-free area. If changes in the pest-free status of such areas occur, APHIS again revises the regulations to recognize the change. Given the time it takes to propose a change to the regulations, accept comments on the proposal, and publish a final rule amending the regulations, the regulations often do not reflect the actual status of a particular area.

In this document, we are proposing to establish criteria within the egulations that, if met, would allow APHIS to be more responsive in recognizing changes in the pest-free status of foreign areas. Under proposed § 319.56–5, when APHIS is provided with evidence that the pest-free status of a foreign area has changed, we will publish in the **Federal Register** a notice announcing the change in status and take public comments on the notice for 60 days. The notice would make available copies of the information showing that the area in question meets the following criteria (which are the same criteria provided in the current regulations):

(1) APHIS made a determination that the area is free of specified pest(s) in accordance with the criteria for establishing freedom from pests found in International Standard for Phytosanitary Measures No. 4, ''Requirements for the establishment of pest free areas.'' (The international standard was established by the International Plant Protection Convention of the United Nations' Food and Agriculture Organization and is incorporated by reference at 7 CFR 300.5.)

(2) APHIS has approved the survey protocol used to determine and maintain pest-free status, as well as protocols for actions to be performed upon detection of a pest. (Pest-free areas are subject to audit by APHIS to verify their status.)

If public comments submitted to APHIS provide evidence that our determination of pest-freedom is incorrect, APHIS would announce in a subsequent **Federal Register** notice that the status of the area in question has changed.

A comprehensive list of pest-free areas would continue to be made available by APHIS on the Internet, but no such list would be contained in the regulations. Rather, the regulations would simply identify the standards an area must meet to be considered pest free, as shown in proposed § 319.56–5.

In conjunction with this proposed change, we would also include a provision in proposed § 319.56–5 regarding how we would acknowledge the decertification of pest-free areas. In the event of pest infestation in an approved pest-free area, APHIS would publish in the **Federal Register** a notice announcing that the pest-free status of the area in question has been withdrawn, and that imports of host crops for the pest in question are subject to application of an approved treatment. If a treatment for the pest is not available, the imports would be prohibited importation. In order for a decertified pest-free area to be reinstated, it would have to be approved by APHIS and meet the criteria for establishing freedom from pests found in International Standard for Phytosanitary Measures No. 4, ''Requirements for the establishment of pest free areas.''

In addition to the proposed changes described above, we would consolidate existing restrictions on fruits and vegetables imported from pest-free areas into proposed § 319.56–5, including requirements for labeling of fruits and vegetables. Requirements for labeling

are currently contained in § 319.56–2(g). Additionally, we would clarify the existing requirement that the imported fruits and vegetables would have to be accompanied by a phytosanitary certificate bearing an additional declaration that the fruits or vegetables originated in a pest-free area that meets the requirements of § 319.56–5(a) and (b).

Also, in conjunction with this change, we would clarify and strengthen the current requirements in § 319.56–2(g) regarding safeguarding of fruits and vegetables that are imported from pest-free areas. We would require fruits or vegetables moved from a pest-free area into or through a non-free area to be safeguarded during the time they are present in a non-free area by insect-proof mesh screens or plastic tarpaulins, including while in transit to the packing house and while awaiting packaging. Further, we would require fruits or vegetables that are moved through a non-free area during transit to a port to be packed in insect-proof cartons or containers or be covered by insect-proof mesh or plastic tarpaulins during transit to the port and subsequent export to the United States. These safeguards would provide necessary protection of imported commodities against pest infestation while they are in transit to the United States and are consistent with standard operating procedures of all current programs for the export of fruits or vegetables from pest-free areas.

Trust Fund Agreements (Proposed § 319.56–6)

Several of the current commodity-specific regulations contain provisions regarding the establishment of trust funds for the payments of APHIS services that are provided in foreign countries. The language of those provisions is generally consistent from one section to another, and as a result, the regulations contain a great deal of redundant text. To eliminate the redundant text, we propose to simplify the language in each section where it exists, and reference a new general trust fund provision, to be contained in proposed § 319.56–6. This change is purely editorial in nature and would not affect the operation of any current or future APHIS programs. The following sections of the current regulations contain trust fund agreement stipulations that would be amended under this proposal: §§ 319.56–2h, 319.56–2r, 319.56–2s, 319.56–2z, 319.56–2cc, 319.56–2dd, 319.56–2ff, 319.56–2ii, 319.56–2jj, and 319.56–2mm.

Territorial Applicability and Exceptions (Proposed § 319.56–7)

The regulations in ''Subpart—Fruits and Vegetables'' generally apply to fruits and vegetables imported into any U.S. State, including U.S. territories and possessions. However, the regulations also provide for the importation of certain fruits and vegetables into certain territories and possessions under conditions that differ from the conditions that apply to importations into the rest of the United States. For example, current § 319.56a contains special restrictions that apply to the importation of fruits and vegetables into Guam. Also, § 319.56–2(d) contains restrictions that apply to the importation of fruits and vegetables into the U.S. Virgin Islands from the British Virgin Islands. Additional provisions pertaining to importations of fruits and vegetables into U.S. territories are located in current §§ 319.56, 319.56–2, 319.56–2a, and § 319.56–8.

We are proposing to simplify the regulations by consolidating all territorial import requirements into one section, proposed § 319.56–7. The requirements pertaining to Guam would be contained in proposed § 319.56–7(b), and requirements pertaining to the U.S. Virgin Islands would be contained in proposed § 319.56–7(c). In conjunction with these changes, we are proposing to amend the existing territorial import requirements to update place names, to reflect changes in political associations, and to update import conditions based on changes in pest prevalence in exporting countries.

Specifically, we would remove the provision in current § 319.56–2a(a)(1) regarding imports from the Marianas Islands into Guam. The entire Marianas Island Archipelago, except Guam, is part of the Commonwealth of the Northern Marianas Islands (CNMI), which is under U.S. administration. Any requirements pertaining to movements of fruits and vegetables into Guam from other U.S. States (as defined in proposed § 319.56–2 to include CNMI) should be located in 7 CFR part 318—Hawaiian and Territorial Quarantine Notices. However, the regulations in part 318 are outdated and do not cover movements of fruits and vegetables from CNMI to the continental United States. The regulations in part 318 require additional amendment; however, the additional amendments are outside the scope of this proposal, which focuses on the revision of the fruits and vegetables regulations. Therefore, we would make no changes to part 318 in this action, but would make the necessary revisions to part 318 in a separate rulemaking. In the meantime, we would continue to administratively enforce restrictions on the movement of fruits and vegetables from CNMI.

We would update references to the Caroline Islands in § 319.56a(a)(3) and Netherlands New Guinea in § 319.56a(a)(8). The Caroline Islands are currently known as Palau and the Federated States of Micronesia, and Netherlands New Guinea is currently known as Papua New Guinea.

The current regulations in § 319.56a provide that *Allium* spp. may be imported into Guam without treatment. We are proposing to clarify that only *Allium* spp. without tops may be imported into Guam, due to the presence of the leaf tip die back disease, *Mycosphaerella schoenoprasi*, and exotic species of leaf miners of *Allium* spp. in countries that regularly trade with Guam. Those pests, which are associated with the *Allium* spp. tops and are not pests of *Allium* spp. bulbs, are not present in Guam. The restrictions on the importation of *Allium* spp. tops is necessary to prevent the introduction of *Mycosphaerella schoenoprasi* and exotic species of leaf miners into Guam.

In addition, we would remove the provision in current § 319.56a(d) that prohibits the importation of coconuts with husks into Guam from the Trust Territory (*i.e.*, the former U.N. Trust Territory of the Pacific under U.S. administration, now Palau, the Marshall Islands, the Northern Mariana Islands, and the Federated States of Micronesia). Under proposed § 319.56–7(b)(1)(xi), all fruits and vegetables approved for entry into any other part or port of the United States may be imported into Guam; and coconuts without husks are eligible for importation into all U.S. States under the provisions of proposed § 319.56–4. Coconuts with husks are not approved for importation into the United States under the regulations.

We would also remove the provisions in current § 319.56a(e), which state that application of the provisions of current §§ 319.56–2d, 319.56–2e, 319.56–2g, 319.56–2k, 319.56–2l, and 319.56–2p is impracticable in the case of traffic into Guam (due to lack of treatment facilities) and therefore such application is withdrawn. Guam now has a treatment facility adequate to treat commodities enterable under the sections cited above, and therefore, current § 319.56a(e) is no longer accurate.

We would also remove a provision now in § 319.56(c) that provides that the Administrator may, by permit, authorize importations into Guam under

conditions specified in the permit that are less stringent than those contained in ''Subpart—Fruits and Vegetables.'' The proposed special use permit regulations in § 319.56–3(b)(7) would provide an equivalent means for authorizing the importation of fruits and vegetables into Guam as is currently allowed under § 319.56(c).

Sections 319.56–8 through 319.56–9 would be reserved to provide additional space in ''Subpart—Fruits and Vegetables'' for future amendments, should such amendments be needed.

Importation of Fruits and Vegetables From Canada (Proposed § 319.56–10)

Under current § 319.56–2(c), fruits and vegetables grown in Canada (except potatoes from Newfoundland and that portion of the Municipality of Central Saanich in the Province of British Columbia east of the West Saanich Road) may be imported into the United States without further restriction. This provision would remain unchanged under this proposal and would be relocated in proposed § 319.56–10.

Importation of Dried, Cured, or Processed Fruits, Vegetables, Nuts, and Legumes (Proposed § 319.56–11)

Under current § 319.56–2, dried, cured, or processed fruits, vegetables, nuts, and legumes are allowed importation into the United States without a permit or phytosanitary certificate, unless the regulations specifically provide otherwise. Exceptions are contained in §§ 319.56–2a and 319.56–2b. Under the proposed regulations, the provisions regarding importation of coconuts into Guam from the Trust Territory would be removed, and the remaining exceptions would be moved to proposed § 319.56–11, for the same reasons described under the description of proposed § 319.56–7 above.

The provisions regarding exceptions would also be reorganized and simplified. Enforceable provisions would remain unchanged, except that we would add a new provision prohibiting the importation of macadamia nuts in the husk or shell from all countries or regions, except from St. Eustatius. This proposed provision is consistent with current APHIS policy on the importation of macadamia nuts and is necessary to protect against the introduction of exotic pests associated with macadamia nuts from foreign countries or regions other than St. Eustatius. Any imports of macadamia nuts in the husk or shell from other countries or regions would be contingent on the findings of pest risk analysis.

Importation of Frozen Fruits and Vegetables (Proposed § 319.56–12)

Current § 319.56–2c prescribes quick freezing in accordance with part 305 as a satisfactory treatment for all fruits and vegetables enterable under permit under § 319.56. Such frozen fruits and vegetables may be imported from any country under permit, in compliance with §§ 319.56–1 through 319.56–7 (exclusive of non-related administrative instructions), at ports authorized in the permits. The regulations also provide that the importation of frozen fruits and vegetables is not authorized when such fruits and vegetables are subject to attack in the area of origin by plant pests that may not, in the judgment of the Administrator, be destroyed by freezing.

We are proposing to simplify the text of the requirements for importing frozen fruits and vegetables to provide that frozen fruits and vegetables may be imported into the United States only if they are quick frozen in accordance with part 305. The regulations would also provide that the importation of certain frozen fruits and vegetables is not authorized when the fruits and vegetables are subject to attack in the area of origin by plant pests that may not be destroyed by freezing. These provisions would be located in proposed § 319.56–12. These changes are not substantive and would not affect existing entry requirements for imported frozen fruits and vegetables.

Additional Requirements for Certain Fruits and Vegetables (Proposed § 319.56–13)

The majority of fruits and vegetables listed in current § 319.56–2t are allowed importation into the United States subject to inspection and other universal requirements. Similarly, the majority of fruits and vegetables listed in current § 319.56–2x are allowed importation into the United States with treatment, in addition to inspection and other universal requirements. In addition, under § 319.56–2g, garlic may be imported from certain countries with treatment, in addition to inspection and other universal requirements. As explained elsewhere in this document, most such commodities would no longer be listed in the regulations under this proposal. However, as also explained earlier in this document, some commodities listed in current §§ 319.56–2g, 319.56–2t and 319.56–2x, as well as some commodities not listed in the regulations but that are allowed importation under permit in accordance with § 319.56–2(e), are allowed importation subject to additional measures beyond inspection and treatment. We are proposing to list those commodities, and any requirements that apply to their importation beyond the general requirements of § 319.56–3, in § 319.56–13. Such commodities would remain subject to the same restrictions that currently apply to their importation. See proposed § 319.56–13 for a list of commodities and applicable requirements. Authorization of additional commodities subject to any of these additional measures or measures other than the designated measures described earlier in this document would continue to require prior specific rulemaking.

Sections 319.56–14 through 319.56–19 would be reserved to provide additional space in ''Subpart—Fruits and Vegetables'' for future amendments, should such amendments be needed.

Commodity-Specific Provisions (Proposed §§ 319.56–20 Through 319.56–40)

Sections 319.56–2a through 319.56–2oo contain restrictions on the importation of specific commodities. As explained elsewhere in this document, a number of these sections will be removed if this proposal is adopted. However, all or part of the following sections would be retained under this proposal:

- § 319.56–2j, ''Conditions governing the entry of apples and pears from Australia (including Tasmania) and New Zealand;''
- § 319.56–2p, ''Administrative instructions prescribing treatment and relieving restrictions regarding importation of okra from Mexico, the West Indies, and certain countries in South America;''
- § 319.56–2r, ''Administrative instructions governing the entry of apples and pears from certain countries in Europe;''
- § 319.56–2s, ''Administrative instructions governing the entry of apricots, nectarines, peaches, plumcot, and plums from Chile;''
- § 319.56–2u, ''Conditions governing the entry of lettuce and peppers from Israel;''
- § 319.56–2w, ''Administrative instruction; conditions governing the entry of papayas from Central America and Brazil;''
- § 319.56–2y, ''Conditions governing the entry of melon and watermelon from certain countries in South America;''
- § 319.56–2aa, ''Conditions governing the entry of watermelon, squash, cucumber, and oriental melon from the Republic of Korea;''
- § 319.56–2cc, ''Administrative instructions governing the entry of Fuji variety apples from Japan and the Republic of Korea;''
- § 319.56–2dd, ''Administrative instructions: conditions governing the entry of tomatoes;''
- § 319.56–2ee, ''Administrative instructions: Conditions governing the entry of Ya variety pears from China;''
- § 319.56–2ff, ''Administrative instructions governing movement of Hass

avocados from Michoacan, Mexico, to approved States;''

- § 319.56–2gg, ''Administrative instructions; conditions governing the entry of peppers from Spain;''
- § 319.56–2hh, ''Conditions governing the entry of peppers from New Zealand;''
- § 319.56–2ii, ''Administrative instructions: conditions governing the entry of mangoes from the Philippines;''
- § 319.56–2jj, ''Administrative instructions; conditions governing the importation of clementines from Spain;''
- § 319.56–2kk, ''Persimmons from the Republic of Korea.''
- § 319.56–2ll, ''Conditions governing the entry of grapes from the Republic of Korea;''
- § 319.56–2mm, ''Conditions governing the importation of clementines, mandarins, and tangerines from Chile.''
- § 319.56–2nn, ''Administrative instructions: Conditions governing the entry of fragrant pears from China.'' and
- § 319.56–2oo, ''Administrative instructions: Conditions governing the entry of peppers from certain Central American countries.''

Under this proposal, some or all of the provisions contained in the sections listed above would be relocated to new sections of the proposed regulations, as shown in the cross reference document. In some cases, we would make no revisions to the actual content of the sections, but simply change paragraph and section designations. In other cases, we are proposing to amend the text to make the regulations easier to understand, to correct errors, or to update them to reflect current APHIS operating procedures. None of these changes would represent significant changes in import policy. Proposed changes that are substantive in nature are described first, by section. Non-substantive editorial changes are described next, also by section.

Proposed Substantive Revisions

Okra From Certain Countries (Proposed § 319.56–21)

Current § 319.56–2p contains varying restrictions on the importation of okra from countries where the pink bollworm (*Pectinophora gossypiella*) is known to exist. The regulations are outdated, and contain differing restrictions for the importation of okra from countries even though the regulations are all aimed at excluding pink bollworm from the United States, and despite the fact that the conditions in the regulations are inconsistent with those enforced by inspectors at ports of entry. Under this proposal, the majority of provisions contained in current § 319.56–2p would be relocated to proposed § 319.56–21, and all imports from pink bollworm-infested areas would be subject to the same requirements. The proposed revisions would bring our okra import regulations up to date with current practice and would make the import provisions equivalent to our domestic regulations that pertain to pink bollworm (7 CFR 301.52 through 301.52–10).

Apricots, Nectarines, Peaches, Plumcot, and Plums From Chile (Proposed § 319.56–23)

Current § 319.56–2s contains restrictions on the importation of apricots, nectarines, peaches, plumcot, and plums from Chile. Under this proposal, all provisions contained in current § 319.56–2s would be relocated to proposed § 319.56–23, except that the provision in § 319.56–2s(b) pertaining to trust fund agreements would be amended and become part of revised § 319.56–6, as explained earlier in this document. In addition, we would update the provisions in current paragraph (d)(1) to ensure the regulations reflect current APHIS operating practices regarding biometric sampling of fruit. The sampling regimens specified in the current regulations would be removed and replaced with provisions that require sampling, but which do not specify the percentage of fruit to be sampled or the confidence level of the inspection. This change is necessary because sampling levels change depending on the pest dynamics associated with the commodity being imported, and the regulations should be designed to account for appropriate increases or decreases in sampling rates.

Tomatoes From Certain Countries (Proposed § 319.56–28)

Current § 319.56–2dd contains restrictions on the importation of tomatoes from certain countries. Under this proposal, all provisions contained in current § 319.56–2dd would be relocated to proposed § 319.56–28, except that: (1) The provision in § 319.56–2dd(d)(3) pertaining to trust fund agreements would be amended and become part of revised § 319.56–6, as explained earlier in this document; and (2) the various provisions pertaining to packing and safeguarding of tomatoes would be amended to require tomatoes to be safeguarded from the time of harvest through export by insect-proof mesh screens or plastic tarpaulins, including while in transit to the packing house and while awaiting packaging. In addition, tomatoes would be required to be packed in insect-proof cartons or containers, or covered by insect-proof mesh or plastic tarpaulins during transit to the airport and subsequent export to the United States. These proposed revisions are necessary to ensure that tomatoes are safeguarded against insect infestation prior to shipment to the United States. The current regulations require packaging and containers to be fruit fly-proof, not insect-proof.

Proposed Non-Substantive Revisions

Apples and Pears From Australia (Including Tasmania) and New Zealand (Proposed § 319.56–20)

Current § 319.56–2j contains restrictions on the importation of apples and pears from Australia (including Tasmania) and New Zealand. Under this proposal, most provisions contained in current § 319.56–2j would be relocated to proposed § 319.56–20.[14] This change would not substantively affect the current regulations, but would make them easier to understand.

Apples and Pears From Certain Countries in Europe (Proposed § 319.56–22)

Current § 319.56–2r contains restrictions on the importation of apples and pears from certain countries in Europe. Under this proposal, all provisions contained in current § 319.56–2r would be relocated to proposed § 319.56–22, except that the provision in § 319.56–2r(b) pertaining to trust fund agreements would be amended and become part of proposed § 319.56–6, as explained earlier in this document.

Lettuce and Peppers From Israel (Proposed § 319.56–24)

Current § 319.56–2u contains restrictions on the importation of lettuce and peppers from Israel. Under this proposal, all provisions contained in current § 319.56–2u would be relocated to proposed § 319.56–24.

Papayas From Central America and Brazil (Proposed § 319.56–25)

Current § 319.56–2w contains restrictions on the importation of papayas from Central America and Brazil. Under this proposal, all provisions contained in current § 319.56–2w would be relocated to proposed § 319.56–25.

Melon and Watermelon From Certain countries in South America (Proposed § 319.56–26)

Current § 319.56–2y contains restrictions on the importation of melon and watermelon from certain countries in South America. Specifically:

[14] As explained elsewhere in this document, general provisions such as those contained in § 319.56–2j(a)(3) through (a)(6) would be consolidated into provisions of general applicability (universal requirements) in proposed §§ 319.56–3 and 305.3.

• Paragraph (a) pertains to the importation of cantaloupe and watermelon from Ecuador;

• Paragraph (b) pertains to the importation of cantaloupe, honeydew melons, and watermelon from Brazil;

• Paragraph (c) pertains to the importation of cantaloupe, honeydew melons, and watermelon from Venezuela; and

• Paragraph (d) pertains to the importation of cantaloupe, netted melon, vegetable melon, winter melon, and watermelon from Peru.

Under this proposal, all provisions contained in paragraph (a) would be relocated to proposed § 319.56–26. The provisions of paragraphs (b) and (c) would be removed from the regulations because their importation would be authorized under proposed § 319.56–4. The basic provisions of paragraph (d) would be moved to proposed § 319.56–26, except that some provisions regarding origin of the fruit from a pest free area would be covered under proposed § 319.56–5.

Fuji Variety Apples From Japan and the Republic of Korea (Proposed § 319.56–27)

Current § 319.56–2cc contains restrictions on the importation of Fuji variety apples from Japan and the Republic of Korea. Under this proposal, all provisions contained in current § 319.56–2cc would be relocated to proposed § 319.56–27, except that the provisions in paragraphs (c) and (d) of § 319.56–2cc would be revised or removed as explained earlier in this document under the headings ''Trust Fund Agreements (Proposed § 319.56–6)'' and ''General requirements for all imported fruits and vegetables (Proposed § 319.56–3).'' We would also amend current § 319.56–2cc(a) to remove the reference to the kanzawa mite (*Tetranychus kanzawai*). This mite is no longer considered a quarantine pest because it exists in the United States, and there is no official control program for it. This change would have no effect on current import conditions, as the treatment required for kanzawa mite would still be required to address the risk posed by other identified pests of apples.

Ya Variety Pears From China (Proposed § 319.56–29)

Current § 319.56–2ee contains restrictions on the importation of Ya variety pears from China. Under this proposal, all provisions contained in current § 319.56–2ee would be relocated to proposed § 319.56–29.

Hass Avocados From Michoacan, Mexico (Proposed § 319.56–30)

Current § 319.56–2ff contains restrictions on the importation of Hass avocados from Michoacan, Mexico. Under this proposal, all provisions contained in current § 319.56–2ff would be relocated to proposed § 319.56–30, except that the provision in § 319.56–2ff(b) pertaining to trust fund agreements would be amended and become part of revised § 319.56–6, as explained earlier in this document.

Peppers From Spain (Proposed § 319.56–31)

Current § 319.56–2gg contains restrictions on the importation of peppers from Spain. Under this proposal, all provisions contained in current § 319.56–2gg would be relocated to proposed § 319.56–31.

Peppers From New Zealand (Proposed § 319.56–32)

Current § 319.56–2hh contains restrictions on the importation of peppers from New Zealand. Under this proposal, all provisions contained in current § 319.56–2hh would be relocated to proposed § 319.56–32.

Mangoes From the Philippines (Proposed § 319.56–33)

Current § 319.56–2ii contains restrictions on the importation of mangoes from the Philippines. Under this proposal, all provisions contained in current § 319.56–2ii would be relocated to proposed § 319.56–33, except that:

• The provisions in § 319.56–2ii(b) regarding the treatment schedule and procedure for mangoes would be removed, as those provisions also exist in part 305.

• The provision in § 319.56–2ii(f) pertaining to trust fund agreements would be amended and become part of revised § 319.56–6, as explained earlier in this document.

• The provision in § 319.56–2ii(g) pertaining to responsibility for damages would be removed, as explained earlier in this document under the heading ''General Requirements for All Imported Fruits and Vegetables (Proposed § 319.56–3).''

Clementines From Spain (Proposed § 319.56–34)

Current § 319.56–2jj contains restrictions on the importation of clementines from Spain. Under this proposal, all provisions contained in current § 319.56–2jj would be relocated to proposed § 319.56–34, except that the provision in § 319.56–2jj(a) pertaining to trust fund agreements would be amended and become part of revised § 319.56–6, as explained earlier in this document. In addition, the provisions in § 319.56–2jj(e) and (i) that pertain to restrictions on the distribution of clementines for the 2002–2003 shipping season would be removed, as those provisions have expired.

Persimmons From the Republic of Korea (Proposed § 319.56–35)

Current § 319.56–2kk contains restrictions on the importation of persimmons from the Republic of Korea. Under this proposal, all provisions contained in current § 319.56–2kk would be relocated to proposed § 319.56–35.

Watermelon, Squash, Cucumber, and Oriental Melon From the Republic of Korea (Proposed § 319.56–36)

Current § 319.56–2aa contains restrictions on the importation of watermelon, squash, cucumber, and oriental melon from the Republic of Korea. Under this proposal, all provisions contained in current § 319.56–2aa would be relocated to proposed § 319.56–36.

Grapes From the Republic of Korea (Proposed § 319.56–37)

Current § 319.56–2ll contains restrictions on the importation of grapes from the Republic of Korea. Under this proposal, all provisions contained in current § 319.56–2ll would be relocated to proposed § 319.56–37.

Clementines, Mandarins, and Tangerines From Chile (Proposed § 319.56–38)

Current § 319.56–2mm contains restrictions on the importation of clementines, mandarins, and tangerines from Chile. Under this proposal, all provisions contained in current § 319.56–2mm would be relocated to proposed § 319.56–38, except that the provision in § 319.56–2mm(f) pertaining to trust fund agreements would be amended and become part of revised § 319.56–6, as explained earlier in this document.

Fragrant Pears From China (Proposed § 319.56–39)

Current § 319.56–2nn contains restrictions on the importation of fragrant pears from China. Under this proposal, all provisions contained in current § 319.56–2nn would be relocated to proposed § 319.56–39.

Peppers From Certain Central American Countries (Proposed § 319.56–40)

Current § 319.56–2oo contains restrictions on the importation of

Peppers from certain Central American countries. Under this proposal, all provisions contained in current § 319.56–2oo would be relocated to proposed § 319.56–40.

Miscellaneous Changes

In addition to the changes described elsewhere in this document, we propose to update terms and references in the regulations as follows:

- References to contact points for APHIS program units and other Government agencies that have been reorganized would be changed as appropriate.
- References to *PPQ Inspector* would be replaced with references to *Inspector* (as defined in proposed § 319.56–2).
- References to the *Department* would be replaced with references to *APHIS.*
- Taxonomic names for certain pests would be updated to reflected changes in scientific classifications.

We would also remove provisions pertaining to the importation of yams from Cuba (see current § 319.56–21(b)(2)), as trade of those commodities with Cuba is prohibited under U.S. law.

In conjunction with the proposed revision of Subpart—Fruits and Vegetables, we would also update, as necessary, various references to sections of the fruits and vegetables regulations located elsewhere in 7 CFR chapter III.

Executive Order 12866 and Regulatory Flexibility Act

This proposed rule has been reviewed under Executive Order 12866. The proposed rule has been determined to be significant for the purposes of Executive Order 12866 and, therefore, has been reviewed by the Office of Management and Budget.

We have prepared an economic analysis for this proposed rule. It provides a cost-benefit analysis as required by Executive Order 12866, as well as an initial regulatory flexibility analysis that considers the potential economic effects of this proposed rule on small entities, as required by the Regulatory Flexibility Act. The economic analysis is summarized below. Copies of the full analysis are available from the person listed under **FOR FURTHER INFORMATION CONTACT**. Please refer to Docket No. APHIS–2005–0106 when requesting copies. The full analysis is also available on the *Regulations.gov* Web site and in our reading room (instructions for accessing *Regulations.gov* and information on the location and hours of the reading room are provided under the heading **ADDRESSES** at the beginning of this document).

We do not currently have all of the data necessary for a comprehensive analysis of the effects of this proposed rule on small entities. Therefore, APHIS welcomes public comment that would enable us to more fully consider impacts of the proposed rule, specifically information on costs that may not be covered by this analysis.

In accordance with the Plant Protection Act (7 U.S.C. 7701 *et seq.*), the Secretary of Agriculture has the authority to promulgate regulations and take measures to prevent the spread of plant pests into or through the United States, which includes regulating the importation of fruits and vegetables into the United States. The Secretary has delegated the responsibility for enforcing the Plant Protection Act to the Administrator of APHIS.

This proposed rule would revise and reorganize the regulations pertaining to the importation of fruits and vegetables to consolidate requirements of generally applicability and eliminate redundant requirements, update terms and remove outdated requirements and references, update the regulations that apply to importations of fruits and vegetables into U.S. territories, and make various editorial and nonsubstantive changes to regulations to make them easier to use. APHIS is also proposing to make substantive changes to the regulations, including: (1) Establishing criteria within the regulations that, if met, would allow APHIS to approve certain new fruits and vegetables for importation into the United States and to acknowledge pest-free areas in foreign countries without undertaking rulemaking; (2) doing away with the process of listing specific commodities that may be imported subject to certain types of risk management measures; and (3) providing for the issuance of special use permits for fruits and vegetables. These changes are necessary to simplify and expedite the APHIS process for approving new imports and pest-free areas while continuing to allow for public participation in the process.

International trade in fruits and vegetables—in particular, many new and newly traded commodities—expanded rapidly over the past two decades, while also undergoing a marked change in the products demanded. According to Food and Agriculture Organization (FAO) data, the average value share of fruits and vegetables (including pulses and tree nuts) in global agricultural exports increased from 11.7 percent in the period 1977–81 to 15.1 percent in 1987–91 and reached an all time high of 16.5 percent in 1997–2001.[15] Imports have become increasingly important for domestic fresh fruit and vegetable consumption. In 2004, the U.S. imported more than $7 billion in fresh fruits and vegetables. Maintaining the current process will make it difficult to keep pace with this rapidly increasing volume of import requests.

The proposed process for approving imports would apply only to commodities that, based on the findings of risk analysis, APHIS determines can be safely imported subject to one or more designated risk management measures. The new process would be a notice-based process while the existing process is a rulemaking-based process.

By eliminating the need for specific prior rulemaking for notice-based process commodities, considerable time savings could be reaped. The current process for approving new imports takes a notable period of time, ranging on average from 18 months to upwards of 3 years (beginning with the initial request and ending with the publication of the final rule). A significant portion of this time is accounted for in the rulemaking process. This proposed rule would reduce the time needed for approval of some fruits and vegetables for import without eliminating opportunity for public participation in our analysis of risk. In addition, this proposed rule would help relieve the burden on APHIS' regulatory mechanism, given the volume of new commodity import requests APHIS has been receiving, and the large volume of rulemaking initiatives already underway in APHIS.

Consumers benefit from the ability to purchase fruits and vegetables from a variety of sources, foreign as well as domestic. Consumer expenditures for fruit and vegetables are growing faster than for any food group other than meats. Many of the commodities that would be covered by this proposed rule would be niche products, unavailable or limited in availability in the United States. This proposed rule would allow importers to more quickly meet consumer demand for those niche products. In addition, climate causes most domestic fruit and vegetable production to be seasonal, with the largest harvests occurring during the summer and fall. Imports supplement domestic supplies, especially of fresh products during the winter, resulting in increased choices for consumers. Even where the new imports would compete directly with domestic production,

[15] Huang, Sophia Wu. Gobal Trade Patterns, in Fruits and Vegetables. Chapter 2. Economic Research Service/USAD.

consumers would benefit when increased competition results in lower prices.

In the current process, once APHIS has conducted a risk analysis and identified what phytosanitary measures are necessary to address the pest risk posed by the commodity subject to an import request, APHIS then proceeds through rulemaking. Through rulemaking, APHIS amends the fruits and vegetables regulations by listing the commodity from a specific part of the world as eligible, under specified conditions, for importation into the United States. Some import requests that might otherwise have very quickly led to new imports are delayed considerably by the rulemaking process. One reason for this is the complexities of the rulemaking process itself. There are certain statutory, executive branch, and departmental process requirements that are typically not required under a notice based process. Another is the nature of the requests. Few if any of these requests warrant an entire rulemaking in and of themselves. These requests are primarily small in stature either because they are specialty crops or are grown in limited quantities in the requesting area. Therefore these requests, when their risk analyses have been completed and needed phytosanitary measures have been identified, are necessarily grouped together for movement through the rulemaking process. These changes, along with other minor regulatory changes, are covered in rulemakings referred to as periodic amendments to Q56.

A significant number of the commodity import requests that APHIS receives would likely fit the notice-based process criteria as laid out in this proposed rule. The number of import requests has grown significantly. There are currently approximately 400 commodity import requests being processed by APHIS. Because of the nature of the import requests likely to qualify for the notice-based approach, those commodities would most likely otherwise be included in periodic amendments to Q56.

Included in the 11th periodic amendment [16] were numerous herbs from Central America, figs from Mexico, peppers from Chile, cape gooseberry from Colombia, longan from China, persimmon from Spain, yard-long-bean from Nicaragua, and yellow pitaya from Colombia. These commodities would fit the notice-based process criteria of this proposed rule, subject only to designated mitigation measures. Had these commodities followed the notice-based process of this proposed rule, these commodities would have been available to U.S. consumers far sooner than was actually the case. For example, all of the pest risk analyses and risk management decisions associated with the herbs from Central America were completed by the end of 2001. The final rule allowing the import of these commodities was not published and effective until June 25, 2003.

In 2004 and 2005, approximately 454,000 kg of the above commodities were imported into the U.S. from the countries covered in the amendment. It is estimated that the average monthly value per commodity of these shipments was about $3,900.[17] There are approximately 400 commodity import requests currently being processed by APHIS. A significant percentage of these requests may fit the notice-based process criteria of this proposed rule. The rulemaking process is an inherently longer process than a notice-based process would be. There are complexities in the rulemaking process that are not present in the notice-based process. In addition, few if any of the requests that would fall into the notice-based process warrant an entire rulemaking in and of themselves, and must therefore be grouped with other commodities for rulemaking. Therefore, a notice based approach to commodity import approvals could be 6 to 12 months shorter than under a rulemaking approach.

For the purposes of estimating the benefits of a notice-based approach to approving commodity import requests, we make the following assumptions: The commodities that are approved for import under this notice-based process have values similar to those approved under the 11th periodic amendment; 30 to 50 percent (120 to 200) of current commodity import requests would be approved under this process; and, those commodities approved in the notice-based process would reach the U.S. market 6 to 12 months earlier than they would under rulemaking.

Based on these assumptions, we could expect imports valued at between $2.8 million and $9.4 million to occur under a notice-based process that would not occur under the current rulemaking process. These added sales represent benefits of this proposed rule. The proposed rule will also have the benefit of improving trade relations with other countries by speeding import approvals. In addition, by moving to a notice-based process for certain commodities, fewer APHIS resources will have to be devoted to rulemaking for these commodities. Those resources will then become available for other uses.

This proposed rule would not alter the manner in which the risks associated with a commodity import request are evaluated, nor would it alter the manner in which those risks are ultimately mitigated. The change would merely allow a new commodity import to move more quickly into commerce to the benefit of consumers once it has been determined that the commodity can be safely imported subject to one or more designated risk management measures.

APHIS currently recognizes changes in the pest-free status of countries via rulemaking. Under this proposed rule, APHIS would use **Federal Register** notices and public comment to acknowledge pest-free areas in foreign countries without undertaking rulemaking. This would allow APHIS to be more responsive in recognizing changes in the pest-free status of foreign areas.

This proposed rule would also clarify and strengthen requirements regarding safeguarding of fruits and vegetables that are imported from pest-free areas. These safeguards would provide necessary protection of imported commodities against pest infestations while they are in transit to the United States and are consistent with standard operating procedures of all current programs that export fruits and vegetables from pest-free areas. These changes should therefore have little, if any, impact on users of the system.

If the notice-based approach is adopted for use by APHIS, the commodities approved under the notice-based track approach would no longer be listed in the regulations, nor would commodities that are currently approved for importation subject to one or more of the designated measures described previously be listed.

The fruits and vegetables manual [18] would contain a listing of all commodities approved for importation into the United States and would serve

[16] Importation of Fruits and Vegetables. Final Rule. Docket No. 02–024–6. **Federal Register**/Vol. 68, No. 122/Wednesday, June 25, 2003/Rules and Regulations.

[17] Shipment information was obtained from APHIS' PQ280 database. Information on value is from the U.S. Census Bureau, Foreign Trade Statistics 'cowpeas,' 'figs,' 'fruit not elsewhere specified,' 'other spices and herbs,' 'other berries,' and 'peppers' from 2004 and 2005, in 2005 dollars.

[18] *Regulating the Importation of Fresh Fruits and Vegetables.* United States Department of Agriculture. Marketing and Regulatory Programs. Animal and Plant Health Inspection Service. Plant Protection and Quarantine. *http://www.aphis.usda.gov/ppq/manuals/port/FV__Chapters.htm.*

as a comprehensive list and reference of enterable fruits and vegetables.

Most of these changes would not alter how or whether a commodity is approved for importation, merely how that status would be presented. These changes should therefore have little, if any, impact on users of the system.

This proposed rule would make several changes to the issuance of permits for the importation of fruits and vegetables. This proposed rule would amend the regulations pertaining to permits to state that certain dried, cured, or processed fruits and vegetables; certain fruits and vegetables grown in Canada; and certain fruits and vegetables grown in the British Virgin Islands that are imported into the U.S. Virgin Islands; may be imported without a permit, while all other fruits and vegetables must be imported under permit. Because this change merely removes an unnecessarily confusing distinction between specific and general written permits, the change should have minor, but positive impact on users.

Other current provisions regarding application for permits; issuance of permits; amendment, denial, or withdrawal of permits; and appeals would be relocated in this proposed rule. The provisions for applying for permits would also be updated to reflect the various means now available for applying for permits. These changes would not affect program operations, and should therefore have little, if any, impact on users of the system.

This proposed rule would also add new provisions to the regulations which would authorize APHIS to issue special use permits that authorize the importation of small lots of fruits or vegetables that are otherwise prohibited importation under the regulations. These permits would provide for the importation of fruits and vegetables for special events such as trade shows and for scientific research. In each case, such imports would only be allowed under strict conditions approved by the administrator to address the particular risk posed by the particular imported fruit or vegetable. This change could facilitate future trade opportunities, scientific research, and potentially pest management, but would have little direct impact on imports or consumers.

This proposed rule would revise, reorganize and update some of the regulations, update terms and remove outdated requirements and references, and make various editorial and nonsubstantive changes to regulations to make them easier to use. The proposed reorganization of the regulations would not affect any requirements for importing commodities but would simplify the regulations and organize them to facilitate future revisions. In addition, this proposal would also clarify treatment requirements in 7 CFR part 305. These changes do not represent a change in program operations and therefore should not affect users of the system.

This proposed rule would also amend the various restrictions on the importation of okra from countries where the pink bollworm is known to exist. The regulations are outdated, and contain differing restrictions for the importation of okra from countries even though the regulations are all aimed at excluding pink bollworm from the United States. Under this proposal, all imports from pink bollworm-infested areas would be subject to the same requirements. The proposed conditions would be equivalent to our domestic regulations that pertain to pink bollworm.

In 2004, okra was imported from 11 countries into the United States with a value of $17.4 million. Mexico has been the primary source of these imports. In 2004, Mexico accounted for nearly 70 percent of the imports. Other major sources are El Salvador, Honduras and Nicaragua, together accounting for about 31 percent of the imports in 2004.

Currently, the regulations contain varying restrictions on the importation of okra from countries where pink bollworm is known to exist. These restrictions include fumigation of imports from pink bollworm infested countries that are moving into infested areas of the U.S. The proposed conditions would remove this restriction. This may reduce the cost associated with some imports. However, this change would primarily impact Mexican imports. Mexico is already, by far, the U.S.' largest foreign source of okra. In addition, this change would only affect a limited portion of those okra imports. Therefore, this change should have at most a minor effect on okra imports and domestic okra prices.

This rule would also update the regulations to reflect current APHIS operating practices regarding biometric sampling of apricots, nectarines, peaches. Plumcot, and plums from Chile. Under the rule, the current sampling regimens would be removed and replaced with provisions that require sampling, but do not specify the percentage of fruit to be sampled or the confidence level of the inspection. Chile is the primary source of U.S. stone fruit imports, accounting for more than 97 percent $73 million in such imports in 2005. However, these modifications proposed in this rule do not represent a change in current program operations and therefore should not affect users of the system.

This proposed rule would also amend the various provisions pertaining to packing and safeguarding of tomatoes. The proposed rule would require tomatoes to be safeguarded from harvest to export by insect-proof mesh screens or plastic tarpaulins, including while in transit to the packing house and while awaiting packaging. In addition, tomatoes would be required to be packed in insect-proof cartons or containers, or covered by insect-proof mesh or plastic tarpaulins for transit to the airport and subsequent export to the United States.

Annual fresh tomato imports were valued at about $852 million on average for the period 2000–2004. This represents more than 14 percent of the value of all fruit and vegetable imports in that period. Fresh tomato imports are primarily from Mexico, which represents nearly 70 percent of the value of tomato imports from all countries for that period. Other important origin countries for U.S. imports of fresh tomatoes are Canada and the Netherlands.

Complying with the provisions of this change could represent added cost to importers. However, this additional cost should be small since the change represents a change in the rigorousness of the packaging and containers protecting against attack by insects, not whether the tomatoes are protected. The current regulations already require packaging and containers to be fruit-fly proof. Therefore, the change should have little impact on importers of tomatoes. We welcome comments on the size of this added cost.

In sum, APHIS expects little impact on the total volume of U.S. imports of fruits and vegetables, with small effects on U.S. marketers and consumers. In addition, those additional measures in this proposal that affect specific commodities are also expected to have limited impact. The main portions of this proposal, if adopted, would represent a significant structural revision of the fruits and vegetables import regulations and would establish a new process for approving certain new commodities for importation into the United States. However, those commodity import requests most likely to qualify for the notice-based process are small in stature. This is either because they are for specialty crops unavailable or limited in availability in the United States, or are for crops grown in limited quantities in the requesting area. In addition, the proposed rule would not alter the conditions for

importing the majority of currently approved fruits or vegetables.

Of particular note with respect to the proposed changes to the approval process, the change would merely allow a new commodity import to move more quickly into commerce to the benefit of consumers once it has been determined that the commodity can be safely imported subject to one or more designated risk management measures. The proposed rule would not alter the manner in which the risk associated with a commodity import request is evaluated, nor would it alter the manner in which those risks are ultimately mitigated. Consumers would have quicker access to imported fruits and vegetables, though risks would still be evaluated and appropriate mitigations required, as they are currently. Also, given the growing number of requests to ship foreign fruits and vegetables to the United States, some trading partners may perceive the time required to conduct the rulemaking process as a barrier to trade. Such perception may impede their consideration of U.S. requests to ship U.S. commodities to their markets. To the extent to which trading partners consider the time it takes to conduct the rulemaking process a trade barrier, by reducing that time; this rule may facilitate the export of U.S. agricultural commodities.

Initial Regulatory Flexibility Analysis

The Regulatory Flexibility Act of 1980 (Pub. L. 96–354) requires agencies to evaluate the potential effects of proposed and final rules on small businesses, small organizations, and small governmental jurisdictions.

Section 603 of the Act requires agencies to prepare and make available for public comment an initial regulatory flexibility analysis (IRFA) describing the impacts of rules on small entities. Section 603(b) of the Act specifies the content of an IRFA. Each IRFA must contain:

- A description of the reasons why action by the agency is being considered;
- A succinct statement of the objectives of, and legal basis for, the proposed rule;
- A description and, where feasible, an estimate of the number of small entities to which the proposed rule will apply;
- A description of the projected reporting, recordkeeping, and other compliance requirements of the proposed rule, including an estimate of the classes of small entities which will be subject to the requirement and the type of professional skills necessary for preparation of the report of record;
- An identification, to the extent practicable, of all relevant Federal rules that may duplicate, overlap, or conflict with the proposed rule; and
- Descriptions of any significant alternatives to the proposed rule which accomplish the stated objectives of applicable statutes and which minimize any significant economic impact of the proposed rule on small entities.

Our responses to these requirements follow.

Rationale

This proposed rule would revise and reorganize the regulations pertaining to the importation of fruits and vegetables to consolidate requirements of generally applicability and eliminate redundant requirements, update terms and remove outdated requirements and references, update the regulations that apply to importations of fruits and vegetables into U.S. territories, and make various editorial and nonsubstantive changes to regulations to make them easier to use. APHIS is also proposing to make substantive changes to the regulations, including: (1) Establishing criteria within the regulations that, if met, would allow APHIS to approve certain new fruits and vegetables for importation into the United States and to acknowledge pest-free areas in foreign countries without undertaking rulemaking; (2) doing away with the process of listing specific commodities that may be imported subject to certain types of risk management measures; and (3) providing for the issuance of special use permits for fruits and vegetables. These changes are necessary to simplify and expedite the APHIS process for approving new imports and pest-free areas while continuing to allow for public participation in the process.

Objectives and Legal Basis

By eliminating the need for specific prior rulemaking for notice-based process commodities, considerable time savings could be reaped. The current process for approving new imports takes a notable period of time, ranging on average from 18 months to 3 years (beginning with the initial request and ending with the publication of the final rule).

Consumers benefit from the ability to purchase fruits and vegetables from a variety of sources, foreign as well as domestic. Many of the commodities that would be covered by this proposed rule would be niche products, unavailable or limited in availability in the United States. This proposed rule would allow importers to more quickly meet consumer demand for those niche products. In addition, climate causes most domestic fruit and vegetable production to be seasonal, with the largest harvests occurring during the summer and fall. Imports supplement domestic supplies, especially of fresh products during the winter, resulting in increased choices for consumers. Even where the new imports would compete directly with domestic production, consumers would benefit when increased competition results in lower prices.

Under the regulations in ''Subpart—Fruits and Vegetables,'' APHIS prohibits or restricts the importation of fresh fruits and vegetables into the United States from certain parts of the world to prevent the introduction and spread of plant pests that are new to or not widely distributed within the United States.

Description and Estimate of Small Entities

Those entities most likely to be economically affected by the proposed rule are domestic importers and producers of fruits and vegetables. The Small Business Administration (SBA) has established guidelines for determining which establishments are to be considered small. Import/export merchants, agents and brokers are identified within the broader wholesaling trade sector. A firm primarily engaged in wholesaling fresh fruits and vegetables is considered small if it employs not more than 100 persons. In 1997,[19] more than 96 percent (5,456 of 5,657) of fresh fruit and vegetable wholesalers would be considered small by SBA standards.[20] All types of fruit and vegetable farms are considered small if they have annual receipts of $0.75 million or less. With some exceptions, vegetable and melon farms are largely individually owned and relatively small, with two-thirds harvesting fewer than 25 acres. In 2002, between 80 and 84 percent of vegetable and melon farms would be considered small. Similarly, although numbers have declined, fruit and tree nut production is still dominated by small, family or individually-run farm operations. In 2002, between 92 and 95 percent of all fruit and tree nut farms would be considered small.[21]

The number of entities that would be affected by this proposed rule is

[19] Establishment and firm size is not yet available for the 2002 Economic Census.

[20] 1997 Economic Census. Department of Commerce. U.S. Bureau of the Census. North American Industry Classification System (NAICS) Category—424480; Fresh fruit & vegetable wholesalers.

[21] 1997 Census of Agriculture. U.S. Department of Agriculture, National Agricultural Statistics Service. NAICS Categories—1112: Vegetable and melon farming; 1113: Fruit and tree nut farming.

unknown but those affected would likely be considered small. However, based on the information that is available, the effects of this proposed rule should be small whether the entity affected is small or large. Those commodity import requests most likely to qualify for the notice-based process are small in stature. This is either because they are for specialty crops unavailable or limited in availability in the United States, or are for crops grown in limited quantities in the requesting area. This proposal would merely allow a new commodity import to move more quickly into commerce to the benefit of consumers once it has been determined that the commodity can be safely imported subject to one or more designated risk management measures. Hence, we expect little impact on the total volume of U.S. imports of fruits and vegetables, with small effects on U.S. marketers and consumers.

Nevertheless, we invite public comment on the proposed rule—including any comment on the expected impacts for small entities, and on how the proposed rule could be modified to reduce expected costs or burdens for small entities consistent with its objectives. Any comment suggesting changes to the proposed criteria should be supported by an explanation of why the changes should be considered.

Reporting, Recordkeeping, and Other Compliance Requirements for Small Entities

The proposed rule contains, under the heading ''Paperwork Reduction Act,'' a description of the information collection and recordkeeping requirements associated with the proposed rule.

Duplication, Overlap or Conflict With Other Federal Rules

APHIS is unaware of any Federal rules that are duplicative, overlapping, or conflicting with this proposed rule.

Alternatives

One alternative to this proposed rule would be to simply continue under APHIS' current process of authorizing the importation of fruits and vegetables. In this case, we would continue to list all newly approved fruits and vegetables in the regulations through notice-and-comment rulemaking, as we have been doing since 1987. This approach is unsatisfactory, because the number of requests we receive from foreign exporters and domestic importers to amend the regulations has been steadily increasing. Maintaining the current process will make it difficult to keep pace with the volume of import requests. Therefore, this alternative was rejected. We believe that the new approach would enable us to be more responsive to the import requests of our trading partners while maintaining the transparency of our decisionmaking afforded by notice-and-comment rulemaking.

Prior to 1987, APHIS authorized the importation of a fruit or vegetable by simply issuing a permit once the Agency was satisfied that the relevant criteria in the regulations had been met. Another alternative to this proposed rule would be to return to this method of authorizing fruit and vegetable importations. This approach is unsatisfactory, because it does not provide the opportunity for public analysis of and comment on the science associated with such imports. Therefore, this alternative was rejected. We believe that the new approach would enable us to be more responsive to the import requests of our trading partners while maintaining the transparency of our decisionmaking afforded by notice-and-comment rulemaking.

Future Analyses

If this rule is adopted as a final rule, the requirements of Executive Order 12866 or the Regulatory Flexibility Act will be met through the analyses that accompany the final rule. The economic effects of importing the specific commodities that are approved using the streamlined approach would not be analyzed at the point of approval, since such approval would occur without additional rulemaking.

Executive Order 12988

This proposed rule has been reviewed under Executive Order 12988, Civil Justice Reform. If this proposed rule is adopted: (1) All State and local laws and regulations that are inconsistent with this rule will be preempted; (2) no retroactive effect will be given to this rule; and (3) administrative proceedings will not be required before parties may file suit in court challenging this rule.

National Environmental Policy Act

The majority of the regulatory changes proposed in this document are nonsubstantive, and would therefore have no effects on the environment. However, this proposal, if adopted, would allow APHIS to approve certain new fruits and vegetables for importation into the United States without undertaking rulemaking. Despite the fact that those fruits and vegetable imports would no longer be contingent on the completion of rulemaking, the requirements of the National Environmental Policy Act of 1969 (NEPA), as amended (42 U.S.C. 4321 *et seq.*) would still apply. As such, for each additional fruit or vegetable approved for importation, APHIS would make available to the public documentation related to our analysis of the potential environmental effects of such new imports. This documentation would likely be made available at the same time and via the same **Federal Register** notice as the risk analysis for the proposed new import.

Paperwork Reduction Act

In accordance with section 3507(d) of the Paperwork Reduction Act of 1995 (44 U.S.C. 3501 *et seq.*), the information collection requirements included in this proposed rule have been submitted for approval to the Office of Management and Budget (OMB). Please send written comments to the Office of Information and Regulatory Affairs, OMB, Attention: Desk Officer for APHIS, Washington, DC 20503. Please state that your comments refer to Docket No. APHIS–2005–0106. Please send a copy of your comments to: (1) Docket No. APHIS–2005–0106, Regulatory Analysis and Development, PPD, APHIS, Station 3A–03.8, 4700 River Road Unit 118, Riverdale, MD 20737–1238, and (2) Clearance Officer, OCIO, USDA, room 404–W, 14th Street and Independence Avenue, SW., Washington, DC 20250. A comment to OMB is best assured of having its full effect if OMB receives it within 30 days of publication of this proposed rule.

In this document, APHIS is proposing, among other things, to establish a regulatory framework that would allow us to approve certain new fruits and vegetables for importation into the United States more effectively and expeditiously. These changes are intended to simplify and expedite our processes for approving certain new imports and pest-free areas while continuing to allow for public participation in the processes.

Under this proposed rule, APHIS may authorize the importation of additional fruits and vegetables subject to permitting and phytosanitary certification requirements. While the specific commodities that may be approved for importation using the new approach described in the proposed rule are unknown at this time, we have estimated the potential reporting burden on the public that could arise if the new approach is adopted. The new burden would be in the form of phytosanitary certificate requirements for some, and permit requirements for all, newly approved commodities.

We are soliciting comments from the public (as well as affected agencies) concerning our proposed information

collection requirements. These comments will help us:

(1) Evaluate whether the proposed information collection is necessary for the proper performance of our agency's functions, including whether the information will have practical utility;

(2) Evaluate the accuracy of our estimate of the burden of the proposed information collection, including the validity of the methodology and assumptions used;

(3) Enhance the quality, utility, and clarity of the information to be collected; and

(4) Minimize the burden of the information collection on those who are to respond (such as through the use of appropriate automated, electronic, mechanical, or other technological collection techniques or other forms of information technology; *e.g.*, permitting electronic submission of responses).

Estimate of burden: Public reporting burden for this collection of information is estimated to average 0.8238 hours per response.

Respondents: Importers, exporters, and national plant protection organizations.

Estimated annual number of respondents: 1,120.

Estimated annual number of responses per respondent: 3.

Estimated annual number of responses: 3,360.

Estimated total annual burden on respondents: 2,768 hours. (Due to averaging, the total annual burden hours may not equal the product of the annual number of responses multiplied by the reporting burden per response.)

Copies of this information collection can be obtained from Mrs. Celeste Sickles, APHIS' Information Collection Coordinator, at (301) 734–7477.

Government Paperwork Elimination Act Compliance

The Animal and Plant Health Inspection Service is committed to compliance with the Government Paperwork Elimination Act (GPEA), which requires Government agencies in general to provide the public the option of submitting information or transacting business electronically to the maximum extent possible. For information pertinent to GPEA compliance related to this proposed rule, please contact Mrs. Celeste Sickles, APHIS' Information Collection Coordinator, at (301) 734–7477.

Lists of Subjects

7 CFR Part 305

Agricultural commodities, Chemical treatment, Cold treatment, Garbage treatment, Heat treatment, Imports, Irradiation, Phytosanitary treatment, Plant diseases and pests, Quarantine, Quick freeze, Reporting and recordkeeping requirements, Transportation.

7 CFR Part 319

Coffee, Cotton, Fruits, Imports, Logs, Nursery stock, Plant diseases and pests, Quarantine, Reporting and recordkeeping requirements, Rice, Vegetables.

7 CFR Part 352

Customs duties and inspection, Imports, Plant diseases and pests, Quarantine, Reporting and recordkeeping requirements, Transportation.

Accordingly, we propose to amend 7 CFR chapter III as follows:

PART 305—PHYTOSANITARY TREATMENTS

1. The authority citation for part 305 would continue to read as follows:

Authority: 7 U.S.C. 7701–7772 and 7781–7786; 21 U.S.C. 136 and 136a; 7 CFR 2.22, 2.80, and 371.3.

§ 305.2 [Amended]

2. In § 305.2, paragraph (i), the table would be amended as follows:

a. In the entry for acorns and chestnuts from all countries, by removing the reference to ''§ 319.56–2b'' and adding a reference to ''§ 319.56–11'' in its place.

b. In the entry for yam from all countries, by removing the words ''(See § 319.56–2l of this chapter)''.

c. In the entry for papaya from Belize, by removing the words ''(See § 319.56–2(j) of this part)''.

d. In the entry for cherimoya from Chile, by removing the words ''(See § 319.56–2z of this chapter for additional treatment information)''.

3. A new § 305.3 would be added to read as follows:

§ 305.3 Monitoring and certification of treatments.

(a) All treatments approved under part 305 are subject to monitoring and verification by APHIS.

(b) Any treatment performed outside the United States must be monitored and certified by an inspector or an official from the national plant protection organization of the exporting country. If monitored and certified by an official of the plant protection organization of the exporting country, the treated commodities must be accompanied a phytosanitary certificate issued by the national plant protection organization of the exporting country certifying that treatment was applied in accordance with APHIS regulations. The phytosanitary certificate must be provided to an inspector when the commodity is offered for entry into the United States. During the entire interval between treatment and export, the consignment must be stored and handled in a manner that prevents any infestation by pests and noxious weeds.

4. Section 305.15 would be revised to read as follows:

§ 305.15 Treatment requirements.

(a) *Approval of treatment facilities.* All facilities or locations used for refrigerating fruits or vegetables in accordance with § 305.16 must be approved by APHIS. Re-approval of the facility or carrier is required annually, or as often as APHIS directs, depending on treatments performed, commodities handled, and operations conducted at the facility. In order to be approved, facilities and carriers must:

(1) Be capable of keeping treated and untreated fruits, vegetables, or other articles separate so as to prevent reinfestation of articles and spread of pests;

(2) Have equipment that is adequate to effectively perform cold treatment.

(b) *Places of treatment; ports of entry.* Precooling and refrigeration may be performed prior to, or upon arrival of fruits and vegetables in the United States, provided treatments are performed in accordance with applicable requirements of this section. Fruits and vegetables that are not treated prior to arrival in the United States must be treated after arrival only in cold storage warehouses approved by the Administrator and located in the area north of 39° longitude and east of 104° latitude or at one of the following ports: The maritime ports of Wilmington, NC; Seattle, WA; Corpus Christi, TX; and Gulfport, MS; Seattle-Tacoma International Airport, Seattle, WA; Hartsfield-Atlanta International Airport, Atlanta, GA; and Washington Dulles International Airport, Chantilly, VA.

(c) *Cold treatment enclosures.* All enclosures in which cold treatment is performed, including refrigerated containers, must:

(1) Be capable of precooling and holding fruits or vegetables at temperatures less than or equal to 2.2 °C (36 °F) or the maximum temperature prescribed in an approved treatment schedule for any fruit or vegetable that is to be treated in the enclosure.

(2) Maintain pulp temperatures according to treatment schedules with no more than a 0.3 °C (0.54 °F) variation in temperature.

(3) Be structurally sound and adequate to maintain required temperatures.

(4) Be equipped with recording devices, such that automatic, continuous temperature records are maintained and secured. Recording devices must be capable of generating temperature charts for verification of treatment by an inspector.

(d) *Precooling.* Before loading in cold treatment containers, packages of fruit must be precooled to a treatment temperature or to a uniform temperature not to exceed 4.5 °C (40 °F) or precooled at the terminal to 2.2 °C (36 °F).

(1) *Treatment in transit.* Fruit that is to be treated in transit must be precooled either at a dockside refrigeration plant prior to loading aboard the carrying vessel, or aboard the carrying vessel. If precooling is accomplished prior to loading aboard the carrying vessel, an authorized official of the country of origin must supervise the precooling operation and certify the treatment by recording pulp temperatures of fruit sampled at different locations of the lot to ensure that the precooling was complete and uniform.

(2) *Treatment upon arrival in the United States.* Fruit that is to be treated upon arrival in the United States must arrive at a temperature sufficiently low to prevent insect activity and must be promptly precooled and refrigerated. Fruit to be both precooled and refrigerated after arrival in the United States must be delivered to the treatment facility subject to safeguards required by an inspector.

(e) *Treatment procedures.*

(1) All material, labor, and equipment for cold treatment performed on vessels must be provided by the vessel or vessel agent.

(2) Refrigeration must be completed in the container, compartment, or room in which it is begun

(3) Fruit that may be cold treated must be safeguarded to prevent cross-contamination or mixing with other infested fruit.

(4) Breaks, damage, etc., in the treatment enclosure that preclude maintaining correct temperatures must be repaired before use.

(5) An inspector must approve loading of compartment, number and placement of sensors, and initial fruit temperature readings before beginning the treatment.

(6) At least three temperature sensors must be used in the treatment compartment during treatment.

(7) The time required to complete the treatment begins when the temperature inside the fruit reaches the required temperature. Refrigeration continues until the vessel arrives at the port of destination and the fruit is released for unloading by an inspector even though this may prolong the period required for the cold treatment.

(8) Only the same type of fruit in the same type of package may be treated together in a container; no mixture of fruits in containers will be treated.

(9) Fruit must be stacked to allow cold air to be distributed throughout the enclosure, with no pockets of warmer air, and to allow random sampling of pulp temperature in any location in load. Temperatures must be recorded at intervals no longer than 1 hour apart. Gaps of longer than 1 hour may invalidate the treatment or indicate treatment failure.

(10) Cold treatment is not completed until so designated by an inspector or the certifying official of the foreign country; shipments of treated commodities may not be discharged until full APHIS clearance has been completed, including review and approval of treatment record charts.

(11) Pretreatment conditioning (heat shock or 100.4 °F for 10 to 12 hours) of fruits is optional and is the responsibility of the shipper.

(12) Cold treatment of fruits in break-bulk vessels or containers must be initiated by an inspector if there is not a treatment technician who has been trained to initiate cold treatments for either break-bulk vessels or containers.

(13) *Inspection of fruits after cold treatment for Mediterranean fruit fly.* An inspector will sample and cut fruit from each shipment cold treated for Mediterranean fruit fly (Medfly) to monitor treatment effectiveness. If a single live Medfly in any stage of development is found, the shipment will be held until an investigation is completed and appropriate remedial actions have been implemented. If APHIS determines at any time that the safeguards contained in this section do not appear to be effective against the Medfly, APHIS may suspend the importation of fruits from the originating country and conduct an investigation into the cause of the deficiency.

(14) *Caution and disclaimer.* The cold treatments required for the entry of fruit are considered necessary for the elimination of plant pests, and no liability shall attach to the U.S. Department of Agriculture or to any officer or representative of that Department in the event injury results to fruit offered for entry in accordance with these instructions. In prescribing cold treatments of certain fruits, it should be emphasized that inexactness and carelessness in applying the treatments may result in injury to the fruit, or its rejection for entry.

(15) *Additional requirements for treatments performed after arrival in the United States.*

(i) *Maritime port of Wilmington, NC.* Shipments of fruit arriving at the maritime port of Wilmington, NC, for cold treatment, in addition to meeting all other applicable requirements of this section, must meet the following special conditions:

(A) Bulk shipments (those shipments which are stowed and unloaded by the case or bin) of fruit must arrive in fruit fly-proof packaging that prevents the escape of adult, larval, or pupal fruit flies.

(B) Bulk and containerized shipments of fruit must be cold-treated within the area over which the U.S. Department of Homeland Security is assigned the authority to accept entries of merchandise, to collect duties, and to enforce the various provisions of the customs and navigation laws in force.

(C) Advance reservations for cold treatment space must be made prior to the departure of a shipment from its port of origin.

(D) The cold treatment facility must remain locked during non-working hours.

(ii) *Maritime port of Seattle, WA.* Shipments of fruit arriving at the maritime port of Seattle, WA, for cold treatment, in addition to meeting all other applicable requirements of this section, must meet the following special conditions:

(A) Bulk shipments (those shipments which are stowed and unloaded by the case or bin) of fruit must arrive in fruit fly-proof packaging that prevents the escape of adult, larval, or pupal fruit flies.

(B) Bulk and containerized shipments of fruit must be cold-treated within the area over which the U.S. Department of Homeland Security is assigned the authority to accept entries of merchandise, to collect duties, and to enforce the various provisions of the customs and navigation laws in force.

(C) Advance reservations for cold treatment space must be made prior to the departure of a shipment from its port of origin.

(D) The cold treatment facility must remain locked during non-working hours.

(E) Blacklight or sticky paper must be used within the cold treatment facility, and other trapping methods, including Jackson/methyl eugenol and McPhail traps, must be used within the 4 square miles surrounding the cold treatment facility.

(F) The cold treatment facility must have contingency plans, approved by the Administrator, for safely destroying or disposing of fruit.

(iii) *Airports of Atlanta, GA and Seattle, WA.* Shipments of fruit arriving at the airports of Atlanta, GA, and Seattle, WA, for cold treatment, in addition to meeting all other applicable requirements of this section, must meet the following special conditions:

(A) Bulk and containerized shipments of fruit must arrive in fruit fly-proof packaging that prevents the escape of adult, larval, or pupal fruit flies.

(B) Bulk and containerized shipments of fruit arriving for cold treatment must be cold treated within the area over which the U.S. Department of Homeland Security is assigned the authority to accept entries of merchandise, to collect duties, and to enforce the various provisions of the customs and navigation laws in force.

(C) The cold treatment facility and APHIS must agree in advance on the route by which shipments are allowed to move between the aircraft on which they arrived at the airport and the cold treatment facility. The movement of shipments from aircraft to cold treatment facility will not be allowed until an acceptable route has been agreed upon.

(D) Advance reservations for cold treatment space must be made prior to the departure of a shipment from its port of origin.

(E) The cold treatment facility must remain locked during non-working hours.

(F) Blacklight or sticky paper must be used within the cold treatment facility, and other trapping methods, including Jackson/methyl eugenol and McPhail traps, must be used within the 4 square miles surrounding the cold treatment facility.

(G) The cold treatment facility must have contingency plans, approved by the Administrator, for safely destroying or disposing of fruit.

(iv) *Maritime ports of Gulfport, MS, and Corpus Christi, TX.* Shipments of fruit arriving at the ports of Gulfport, MS, and Corpus Christi, TX, for cold treatment, in addition to meeting all other applicable requirements of this section, must meet the following special conditions:

(A) All fruit entering the port for cold treatment must move in maritime containers. No bulk shipments (those shipments which are stowed and unloaded by the case or bin) are permitted.

(B) Within the container, the fruit intended for cold treatment must be enclosed in fruit fly-proof packaging that prevents the escape of adult, larval, or pupal fruit flies.

(C) All shipments of fruit arriving at the port for cold treatment must be cold treated within the area over which the U.S. Department of Homeland Security is assigned the authority to accept entries of merchandise, to collect duties, and to enforce the various provisions of the customs and navigation laws in force.

(D) The cold treatment facility and APHIS must agree in advance on the route by which shipments are allowed to move between the vessel on which they arrived at the port and the cold treatment facility. The movement of shipments from vessel to cold treatment facility will not be allowed until an acceptable route has been agreed upon.

(E) Advance reservations for cold treatment space at the port must be made prior to the departure of a shipment from its port of origin.

(F) Devanning, the unloading of fruit from containers into the cold treatment facility, must adhere to the following requirements:

(*1*) All containers must be unloaded within the cold treatment facility; and

(*2*) Untreated fruit may not be exposed to the outdoors under any circumstances.

(G) The cold treatment facility must remain locked during non-working hours.

(H) Blacklights or sticky paper must be used within the cold treatment facility, and other trapping methods, including Jackson/methyl eugenol and McPhail traps, must be used within the 4 square miles surrounding the cold treatment facility at the maritime port of Gulfport, MS, and within the 5 square miles surrounding the cold treatment facility at the maritime port of Corpus Christi, TX.

(I) During cold treatment, a backup system must be available to cold treat the shipments of fruit should the primary system malfunction. The facility must also have one or more reefers (cold holding rooms) and methods of identifying lots of treated and untreated fruits.

(J) The cold treatment facility must have the ability to conduct methyl bromide fumigations on site.

(K) The cold treatment facility must have contingency plans, approved by the Administrator, for safely destroying or disposing of fruit.

(f) *Monitoring.* Treatment must be monitored by an inspector to ensure proper administration of the treatment. An inspector must also approve the recording devices and sensors used to monitor temperatures and conduct an operational check of the equipment before each use and ensure sensors are calibrated. An inspector may approve, adjust, or reject the treatment.

(g) *Compliance agreements.* Facilities located in the United States must operate under a compliance agreement with APHIS. The compliance agreement must be signed by a representative of the cold treatment facility and APHIS. The compliance agreement must contain requirements for equipment, temperature, circulation, and other operational requirements for performing cold treatment to ensure that treatments are administered properly. Compliance agreements must allow officials of APHIS to inspect the facility to monitor compliance with the regulations.

(h) *Work plans.* Facilities located outside the United States may operate in accordance with a bilateral work plan. The work plan, if and when required, must be signed by a representative of the cold treatment facility, the national plant protection organization of the country of origin (NPPO), and APHIS. The work plans must contain requirements for equipment, temperature, circulation, and other operational requirements for performing cold treatment to ensure that cold treatments are administered properly. Work plans for facilities outside the United States may also include trust fund agreement information regarding payment of the salaries and expenses of APHIS employees on site. Work plans must allow officials of the NPPO and APHIS to inspect the facility to monitor compliance with APHIS regulations.

§ 305.17 [Amended]

5. In § 305.17, paragraph (a) would be amended by removing the citation ''319.56–2c'' and adding the citation ''319.56–12'' in its place.

PART 319—FOREIGN QUARANTINE NOTICES

6. The authority citation for part 319 would continue to read as follows:

Authority: 7 U.S.C. 450, 7701–7772, and 7781–7786; 21 U.S.C. 136 and 136a; 7 CFR 2.22, 2.80, and 371.3.

§ 319.28 [Amended]

7. Section 319.28 would be amended as follows:

a. In paragraph (a)(2), the words ''(except as provided by § 319.56–2f of this part)'' would be removed.

b. In paragraph (e), the words ''the Fruits and Vegetables Quarantine (§ 319.56)'' would be removed and the words ''Subpart—Fruits and Vegetables of this part'' would be added in their place.

§ 319.37–2 [Amended]

8. In § 319.37–2, paragraph (a), in the table, the entry for ''*Cocos nucifera*'' would be amended by removing the citation ''§ 319.56'' in column 1 and adding the citation ''§ 319.56–11'' in its place.

§ 319.40–2 [Amended]

9. In § 319.40–2, paragraph (c) would be amended by removing the words ''§§ 319.56 through 319.56–8,''.

§ 319.40–9 [Amended]

10. In § 319.40–9, paragraph (a)(4)(i), footnote 4 would be amended by removing the words ''§§ 319.56 through 319.56–8,''.

§ 319.41a [Amended]

11. In § 319.41a, paragraph (c) would be amended by removing the citation ''§ 319.56–2'' and adding the citation ''§ 319.56–3'' in its place.

12. Subpart—Fruits and Vegetables, §§ 319.56 through 319.56–8, would be revised to read as follows:

Subpart—Fruits and Vegetables

Sec.

319.56–1 Notice of quarantine.
319.56–2 Definitions.
319.56–3 General requirements for all imported fruits and vegetables.
319.56–4 Approval of certain fruits and vegetables for importation.
319.56–5 Pest-free areas.
319.56–6 Trust fund agreements.
319.56–7 Territorial applicability and exceptions.
319.56–8 through 319.56–9 [Reserved]
319.56–10 Importation of fruits and vegetables from Canada.
319.56–11 Importation of dried, cured, or processed fruits, vegetables, nuts, and legumes.
319.56–12 Importation of frozen fruits and vegetables.
319.56–13 Additional requirements for certain fruits and vegetables.
319.56–14 through 319.56–19 [Reserved]
319.56–20 Apples and pears from Australia (including Tasmania) and New Zealand.
319.56–21 Okra from certain countries.
319.56–22 Apples and pears from certain countries in Europe.
319.56–23 Apricots, nectarines, peaches, plumcot, and plums from Chile.
319.56–24 Lettuce and peppers from Israel.
319.56–25 Papayas from Central America and Brazil.
319.56–26 Melon and watermelon from certain countries in South America.
319.56–27 Fuji variety apples from Japan and the Republic of Korea.
319.56–28 Tomatoes from certain countries.
319.56–29 Ya variety pears from China.
319.56–30 Hass avocados from Michoacan, Mexico.
319.56–31 Peppers from Spain.
319.56–32 Peppers from New Zealand.
319.56–33 Mangoes from the Philippines.
319.56–34 Clementines from Spain.
319.56–35 Persimmons from the Republic of Korea.
319.56–36 Watermelon, squash, cucumber, and oriental melon from the Republic of Korea.
319.56–37 Grapes from the Republic of Korea.
319.56–38 Clementines, mandarins, and tangerines from Chile.
319.56–39 Fragrant pears from China.
319.56–40 Peppers from certain Central American countries.

Subpart—Fruits and Vegetables

§ 319.56–1 Notice of quarantine.

(a) Under § 412(a) of the Plant Protection Act, the Secretary of Agriculture may prohibit or restrict the importation and entry of any plant or plant product if the Secretary determines that the prohibition or restriction is necessary to prevent the introduction into the United States or the dissemination within the United States of a plant pest or noxious weed.

(b) The Secretary has determined that it is necessary to prohibit the importation into the United States of fruits and vegetables and associated plants and portions of plants except as provided in this part.

§ 319.56–2 Definitions.

Above ground parts. Any plant parts, such as stems, leaves, fruit, or inflorescence (flowers), that grow solely above the soil surface.

Administrator. The Administrator of the Animal and Plant Health Inspection Service, United States Department of Agriculture, or any other employee of the United States Department of Agriculture delegated to act in his or her stead.

APHIS. The Animal and Plant Health Inspection Service, United States Department of Agriculture.

Commercial consignment. A lot of fruits or vegetables that an inspector identifies as having been imported for sale and distribution. Such identification will be based on a variety of indicators, including, but not limited to: Quantity of produce, type of packaging, identification of grower or packing house on the packaging, and documents consigning the fruits or vegetables to a wholesaler or retailer.

Commodity. A type of plant, plant product or other regulated article being moved for trade or other purpose.

Consignment. A quantity of plants, plant products, and/or other articles, including fruits or vegetables, being moved from one country to another and covered, when required, by a single phytosanitary certificate (a consignment may be composed of one or more commodities or lots).

Country of origin. Country where the plants from which the plant products are derived were grown.

Cucurbits. Any plants in the family Cucurbitaceae.

Field. A plot of land with defined boundaries within a place of production on which a commodity is grown.

Fruits and vegetables. A commodity class for fresh parts of plants intended for consumption or processing and not for planting.

Import and importation. To move into, or the act of movement into, the territorial limits of the United States.

Inspector. Any individual authorized by the Administrator of APHIS or the Commissioner of the Bureau of Customs and Border Protection, Department of Homeland Security, to enforce the regulations in this subpart.

Lot. A number of units of a single commodity, identifiable by its homogeneity of composition and origin, forming all or part of a consignment.

National plant protection organization. Official service established by a government to discharge the functions specified by the International Plant Protection Convention.

Noncommercial consignment. A lot of fruits or vegetables that an inspector identifies as having been imported for personal use and not for sale.

Permit. A written, oral, or electronically transmitted authorization to import fruits or vegetables in accordance with this subpart.

Phytosanitary certificate. A document, including electronic versions, that is related to a consignment and that:

(1) Is patterned after the model certificate of the International Plant Protection Convention (IPPC), a multilateral convention on plant protection under the authority of the Food and Agriculture Organization of the United Nations (FAO);

(2) Is issued by an official of a foreign national plant protection organization in one of the five official languages of the FAO;

(3) Is addressed to the plant protection service of the United States (Animal and Plant Health Inspection Service);

(4) Describes the consignment;

(5) Certifies the place of origin for all contents of the consignment;

(6) Certifies that the consignment has been inspected and/or tested according to appropriate official procedures and is considered to be free from quarantine pests of the United States;

(7) Contains any additional declarations required by this subpart; and

(8) Certifies that the consignment conforms with the phytosanitary requirements of the United States and is considered eligible for importation pursuant to the laws and regulations of the United States.

Phytosanitary measure. Any legislation, regulation or official procedure having the purpose to prevent the introduction and/or spread of quarantine pests, or to limit the economic impact of regulated non-quarantine pests.

Place of production. Any premises or collection of fields operated as a single production or farming unit. This may include a production site that is separately managed for phytosanitary purposes.

Plant debris. Detached leaves, twigs, or other portions of plants, or plant litter or rubbish as distinguished from approved parts of clean fruits and vegetables, or other commercial articles.

Port of first arrival. The first port within the United States where a consignment is (1) offered for consumption entry or (2) offered for entry for immediate transportation in bond.

Production site. A defined portion of a place of production utilized for the production of a commodity that is managed separately for phytosanitary purposes. This may include the entire place of production or portions of it. Examples of portions of places of production are a defined orchard, grove, field, or premises.

Quarantine pest. A pest of potential economic importance to the area endangered by it and not yet present there, or present but not widely distributed there and being officially controlled.

United States. All of the States of the United States, the Commonwealth of Northern Mariana Islands, the Commonwealth of Puerto Rico, the District of Columbia, Guam, the Virgin Islands of the United States, and any other territory or possession of the United States.

West Indies. The foreign islands lying between North and South America, the Caribbean Sea, and the Atlantic Ocean, divided into the Bahamas, the Greater Antilles (including Hispaniola), and the Lesser Antilles (including the Leeward Islands, the Windward Islands, and the islands north of Venezuela).

§ 319.56–3 General requirements for all imported fruits and vegetables.

All fruits and vegetables that are allowed importation under this subpart must be imported in accordance with the following requirements, except as specifically provided otherwise in this subpart.

(a) *Freedom from plant debris.* All fruits and vegetables imported under this subpart, whether in commercial or noncommercial consignments, must be free from plant debris, as defined in § 319.56–2;

(b) *Permit.* (1) All fruits and vegetables imported under this subpart, whether commercial or noncommercial consignments, must be imported under permit issued by APHIS, must be imported under the conditions specified in the permit, and must be imported in accordance with all applicable regulations in this part; *except* for:

(i) Dried, cured, or processed fruits and vegetables (except frozen fruits and vegetables), including cured figs and dates, raisins, nuts, and dried beans and peas, except certain acorns and chestnuts subject to § 319.56–11 of this subpart;

(ii) Fruits and vegetables grown in Canada (except potatoes from Newfoundland and that portion of the Municipality of Central Saanich in the Province of British Columbia east of the West Saanich Road, which are prohibited importation into the United States); and

(iii) Fruits and vegetables except mangoes, grown in the British Virgin Islands that are imported into the U.S. Virgin Islands.

(2) *Applying for a permit.* Permit applications must be submitted in writing or electronically as provided in this paragraph and must be submitted in advance of the proposed importation. Applications must state the country or locality of origin of the fruits or vegetables, the anticipated port of first arrival, the name and address of the importer in the United States, and the identity (scientific name preferred) and quantity of the fruit or vegetable. Use of PPQ Form 587 or Internet application is preferred.

(i) *By mail.* Persons who wish to apply by mail for a permit to import fruits or vegetables into the United States must submit their application to the Animal and Plant Health Inspection Service, Plant Protection and Quarantine, Permit Services, 4700 River Road, Unit 136, Riverdale, MD 20737–1236.

(ii) *Via the Internet.* Persons who wish to apply for a permit to import fruits or vegetables into the United States via the internet must do so using APHIS Plant Protection and Quarantine's permit Web site at *http://www.aphis.usda.gov/ppq/permits/.*

(iii) *By fax.* Persons who wish to apply by fax for a permit to import fruits or vegetables into the United States must do so by faxing their application to: Animal and Plant Health Inspection Service, Plant Protection and Quarantine, Permit Services, (301) 734–5786.

(3) *Issuance of permits.* If APHIS approves a permit application, APHIS will issue a permit specifying the conditions applicable to the importation of the fruit or vegetable.

(4) *Issuance of oral permits.* Oral permits may be issued at ports of entry for noncommercial consignments if the commodity is admissible with inspection only. Oral permits may be issued for commercial consignments of fruits and vegetables that are not accompanied by a written permit upon arrival in the United States if all applicable entry requirements are met and proof of application for a written permit is supplied to an inspector.

(5) *Amendment, denial, or withdrawal of permits.* The Administrator may amend, deny, or withdraw a permit at any time if he or she determines that conditions exist that present an unacceptable risk of the fruit or vegetable introducing quarantine pests or noxious weeds into the United States. If the withdrawal is oral, the withdrawal of the permit and the reasons for the withdrawal will be confirmed in writing as promptly as circumstances allow.

(6) *Appeals.* Any person whose permit has been amended, denied, or withdrawn may appeal the decision in writing to the Administrator within 10 days after receiving the written notification of the decision. The appeal must state all of the facts and reasons upon which the person relies to show that the permit was wrongfully amended, denied, or withdrawn. The Administrator will grant or deny the appeal, in writing, stating the reasons for granting or denying the appeal, as promptly as circumstances permit. If there is a conflict as to any material fact and the person who has filed an appeal requests a hearing, a hearing will be held to resolve the conflict. Rules of practice concerning the hearing will be adopted by the Administrator. The permit withdrawal will remain in effect pending resolution of the appeal or the hearing.

(7) *Special use permits.* The Administrator may grant special use permits that authorize the importation of small lots of fruits or vegetables that are otherwise prohibited importation under this part, provided that the fruits or vegetables:

(i) Are not intended for commercial distribution;

(ii) Are to be imported, transported, and stored or displayed under specific conditions which the Administrator has

determined will mitigate the pest risk posed by the imported fruits or vegetables; and

(iii) Are to be consumed, disposed of, destroyed, or re-exported at a time and in a manner and place ordered by an inspector or as specified in the permit.

(c) *Ports of entry.* (1) Fruits and vegetables must be imported into specific ports if so required by this subpart or by part 305 of this chapter, or if so required by a permit issued under paragraph (b) of this section for the importation of the particular fruit or vegetable. If a permit issued for the importation of fruits or vegetables names specific port(s) where the fruits or vegetables must be imported, the fruits and vegetables may only be imported into the port(s) named in the permit. If a permit issued for the importation of fruits or vegetables does not name specific port(s) where the fruits or vegetables must be imported, the fruits and vegetables may be imported into any port referenced in paragraph (c)(2) of this section.

(2) Fruits and vegetables imported under this subpart may be imported into any port listed in 19 CFR 101.3(b)(1), except as otherwise provided by part 319 or by a permit issued in accordance with part 319, and except as provided in § 330.104 of this chapter. Fruits and vegetables that are to be cold treated at ports in the United States may only be imported into specific ports as provided in § 305.15 of this chapter.

(d) *Inspection, treatment, and other requirements.* All imported fruits or vegetables are subject to inspection, are subject to such disinfection at the port of first arrival as may be required by an inspector, and are subject to reinspection at other locations at the option of an inspector. If an inspector finds plants or portions of plants, or a plant pest or noxious weed, or evidence of a plant pest or noxious weed on or in any fruit or vegetable or its container, or finds that the fruit or vegetable may have been associated with other articles infested with plant pests or noxious weeds, the owner or agent of the owner of the fruit or vegetable must clean or treat the fruit or vegetable and its container as required by an inspector, and the fruit or vegetable is also subject to reinspection, cleaning, and treatment at the option of an inspector at any time and place until all applicable requirements of this subpart have been accomplished.

(1) *Notice of arrival; assembly for inspection.* Any person importing fruits and vegetables into the United States must offer those agricultural products for inspection and entry at the port of first arrival. The owner or agent must assemble the fruits and vegetables for inspection at the port of first arrival, or at any other place designated by an inspector, and in a manner designated by the inspector. All fruits and vegetables must be accurately disclosed and made available to an inspector for examination. The owner or the agent must provide an inspector with the name and address of the consignee and must make full disclosure of the type, quantity, and country and locality of origin of all fruits and vegetables in the consignment, either orally for noncommercial consignments or on an invoice or similar document for commercial consignments.

(2) *Refusal of entry.* If an inspector finds that an imported fruit or vegetable is prohibited, or is not accompanied by required documentation, or is so infested with a plant pest or noxious weed that, in the judgment of the inspector, it cannot be cleaned or treated, or contains soil or other prohibited contaminants, the entire lot or consignment may be refused entry into the United States.

(3) *Release for movement.* No person may move a fruit or vegetable from the port of first arrival unless an inspector has either:

(i) Released it;

(ii) Ordered treatment at the port of first arrival and, after treatment, released the fruit or vegetable;

(iii) Authorized movement of the fruit or vegetable to another location for treatment, further inspection, or destruction; or

(iv) Ordered the fruit or vegetable to be reexported.

(4) *Notice to owner of actions ordered by inspector.* If an inspector orders any disinfection, cleaning, treatment, reexportation, recall, destruction, or other action with regard to imported fruits or vegetables while the shipment is in foreign commerce, the inspector will issue an emergency action notification (PPQ Form 523) to the owner of the fruits or vegetables or to the owner's agent. The owner must, within the time and in the manner specified in the PPQ Form 523, destroy the fruits and vegetables, ship them to a point outside the United States, move them to an authorized site, and/or apply treatments or other safeguards to the fruits and vegetables as prescribed to prevent the introduction of plant pests or noxious weeds into the United States.

(e) *Costs and charges.* APHIS will be responsible only for the costs of providing the services of an inspector during regularly assigned hours of duty and at the usual places of duty.[1] The owner of imported fruits or vegetables is responsible for all additional costs of inspection, treatment, movement, storage, destruction, or other measures ordered by an inspector under this subpart, including any labor, chemicals, packing materials, or other supplies required. APHIS will not be responsible for any costs or charges, other than those identified in this section.

(f) *APHIS not responsible for damage.* APHIS assumes no responsibility for any damage to fruits or vegetables that results from the application of treatments or other measures required under this subpart (or under part 305 of this chapter) to protect against the introduction of plant pests into the United States.

§ 319.56–4 Approval of certain fruits and vegetables for importation.

(a) *Determination by the Administrator.* The Administrator has determined that the application of one or more of the designated phytosanitary measures cited in paragraph (b) of this section to certain imported fruits and vegetables mitigates the risk posed by those commodities, and that such fruits and vegetables may be imported into the United States subject to one or more of those measures, as provided in paragraphs (c) and (d) of this section. The name and origin of all fruits and vegetables authorized importation under this section, as well as the applicable requirements for their importation may be found on the Internet at *http://www.aphis.usda.gov/ppq/manuals/port/FV_Chapters.htm.* Commodities that require phytosanitary measures other than one or more of the designated phytosanitary measures cited in paragraph (b) of this section may only be imported in accordance with applicable requirements in § 319.56–3 and commodity-specific requirements contained elsewhere in this subpart.

(b) *Designated phytosanitary measures.*

(1) Fruits or vegetables are subject to inspection upon arrival in the United States and comply with all applicable provisions of § 319.56–3.

(2) The fruits or vegetables are imported from a pest-free area in the country of origin and are accompanied by a phytosanitary certificate stating that the fruits or vegetables originated in a pest-free area in the country of origin.

(3) The fruits or vegetables are treated in accordance with part 305 of this chapter.

[1] Provisions relating to costs for other services of an inspector are contained in part 354 of this chapter.

(4) The fruits or vegetables are inspected in the country of origin by an inspector or an official of the national plant protection organization of the exporting country, and have been found free of one or more specific quarantine pests identified by risk analysis as likely to follow the import pathway.

(c) *Fruits and vegetables authorized importation under this section.*

(1) *Previously approved fruits and vegetables.* Fruits and vegetables that were authorized importation under this subpart either directly by permit or by specific regulation as of [effective date of final rule] and that were subject only to one or more of the designated phytosanitary measures cited in paragraph (b) of this section and the general requirements of § 319.56–3, may continue to be imported into the United States under the same requirements that applied before [effective date of final rule], except as provided in paragraph (d) of this section.

(2) *Other fruits and vegetables.* Fruits and vegetables that do not meet the criteria in paragraph (c)(1) of this section may be authorized importation under this section as follows:

(i) *Pest risk analysis.* The risk posed by the particular fruit or vegetable from a specified country or other region has been evaluated and publicly communicated as follows:

(A) *Availability of pest risk analysis.* APHIS published in the **Federal Register**, for a minimum of 60 days public comment, a notice announcing the availability of a pest risk analysis that evaluated the risks associated with the importation of the particular fruit or vegetable.

(B) *Determination of risk; factors considered.* The Administrator determined, and announced in the notice referred to in the previous paragraph, that, based on the information available, the application of one or more of the designated phytosanitary measures described in paragraph (b) of this section is sufficient to mitigate the risk that plant pests or noxious weeds could be introduced into or disseminated within the United States via the imported fruit or vegetable. In order for the Administrator to make the determination described in this paragraph, the risk analysis for the fruit or vegetable must find that the risk posed by each quarantine pest associated with the fruit or vegetable in the country or other region of origin is mitigated by one or more of the following factors:

(*1*) *Inspection.* A quarantine pest is associated with the commodity in the country or region of origin, but the pest can be easily detected via inspection;

(*2*) *Pest freedom.* No quarantine pests are known to be associated with the fruit or vegetable in the country or region of origin, or a quarantine pest is associated with the commodity in the country or region of origin but the commodity originates from an area in the country or region that meets the requirements of § 319.56–5 for freedom from that pest;

(*3*) *Effectiveness of treatment.* A quarantine pest is associated with the fruit or vegetable in the country or region of origin, but the risk posed by the pest can be reduced by applying an approved post-harvest treatment to the fruit or vegetable.

(*4*) *Pre-export inspection.* A quarantine pest is associated with the commodity in the country or region of origin, but the commodity is subject to pre-export inspection, and the commodity is to be accompanied by a phytosanitary certificate that contains an additional declaration that the commodity has been inspected and found free of such pests in the country or region of origin.

(ii) *Issuance of import permits.* The Administrator announced in a subsequent **Federal Register** notice that APHIS would begin issuing permits for importation of the fruit or vegetable subject to requirements specified in the notice because:

(A) No comments were received on the pest risk analysis;

(B) The comments on the pest risk analysis revealed that no changes to the pest risk analysis were necessary; or

(C) Changes to the pest risk analysis were made in response to public comments, but the changes did not affect the overall conclusions of the analysis and the Administrator's determination of risk.

(d) *Amendment of import requirements.* If, after [*effective date of final rule*] the Administrator determines that one or more of the designated phytosanitary measures is not sufficient to mitigate the risk posed by any of the fruits and vegetables that are authorized importation into the United States under this section, APHIS may prohibit or further restrict importation of the fruit or vegetable and publish a notice in the **Federal Register** advising the public of its finding. The notice will specify the amended import requirements, provide an effective date for the change, and will invite public comment on the subject.

§ 319.56–5 Pest-free areas.

As provided elsewhere in this subpart, certain fruits and vegetables may be imported into the United States provided that the fruits or vegetables originate from an area that is free of a specific pest or pests. In some cases, fruits or vegetables may only be imported if the area of export is free of all quarantine pests that attack the fruit or vegetable. In other cases, fruits and vegetables may be imported if the area of export is free of one or more quarantine pests that attack the fruit or vegetable, and provided that the risk posed by the remaining quarantine pests that attack the fruit or vegetable is mitigated by other specific phytosanitary measures contained in the regulations in this subpart.

(a) *Application of international standard for pest free areas.* APHIS requires that determinations of pest-free areas be made in accordance with the criteria for establishing freedom from pests found in International Standard for Phytosanitary Measures No. 4, ''Requirements for the establishment of pest free areas.'' The international standard was established by the International Plant Protection Convention of the United Nations' Food and Agriculture Organization and is incorporated by reference in § 300.6 of this chapter.

(b) *Survey protocols.* APHIS must approve the survey protocol used to determine and maintain pest-free status, as well protocols for actions to be performed upon detection of a pest. Pest-free areas are subject to audit by APHIS to verify their status.

(c) *Determination of pest freedom.* For an area to be considered free of a specified pest for the purposes of this subpart, the Administrator must determine, and announce in a notice or rule published in the **Federal Register**, that the area meets the criteria of paragraphs (a) and (b) of this section.

(d) *Decertification of pest-free areas; reinstatement.* If a pest is detected in an area that is designated as free of that pest, APHIS would publish in the **Federal Register** a notice announcing that the pest-free status of the area in question has been withdrawn, and that imports of host crops for the pest in question are subject to application of an approved treatment for the pest. If a treatment for the pest is not available, the host crops would be prohibited importation. In order for a decertified pest-free area to be reinstated, it would have to meet the criteria of paragraphs (a) and (b) of this section.

(e) *General requirements for fruits and vegetables imported from pest-free areas.*

(1) *Labeling.* Each box of fruits or vegetables that is imported into the United States from a pest-free area under this subpart must be clearly labeled with:

(i) The name of the orchard or grove of origin, or the name of the grower; and

(ii) The name of the municipality and State in which the fruits or vegetables were produced; and

(iii) The type and amount of fruit the box contains.

(2) *Phytosanitary certificate.* A phytosanitary certificate must accompany the imported fruits or vegetables, and must contain an additional declaration that the fruits originate from a pest-free area that meets the requirements of paragraphs (a) and (b) of this section.

(3) *Safeguarding.* If fruits or vegetables are moved from a pest-free area into or through an area that is not free of that pest, the fruits or vegetables must be safeguarded during the time they are present in a non-pest-free area by being covered with insect-proof mesh screens or plastic tarpaulins, including while in transit to the packing house and while awaiting packaging. If fruits or vegetables are moved through an area that is not free of that pest during transit to a port, they must be packed in insect-proof cartons or containers or be covered by insect-proof mesh or plastic tarpaulins during transit to the port and subsequent export to the United States. These safeguards described in this section must be intact upon arrival in the United States.

§ 319.56–6 Trust fund agreements.

If APHIS personnel need to be physically present in an exporting country or region to facilitate the exportation of fruits or vegetables and APHIS services are to be funded by the national plant protection organization of the exporting country or a private export group, then the national plant protection organization or the private export group must enter into a trust fund agreement with APHIS that is in effect at the time the fruits or vegetables are exported. Under the agreement, the national plant protection organization of the exporting country or the private export group must pay in advance all estimated costs that APHIS expects to incur in providing inspection services in the exporting country. These costs will include administrative expenses incurred in conducting the services and all salaries (including overtime and the Federal share of employee benefits), travel expenses (including per diem expenses), and other incidental expenses incurred by the inspectors in performing services. The agreement must require the national plant protection organization of the exporting country or region or a private export group to deposit a certified or cashier's check with APHIS for the amount of those costs, as estimated by APHIS. The agreement must further specify that, if the deposit is not sufficient to meet all costs incurred by APHIS, the national plant protection organization of the exporting country or a private export group must deposit with APHIS, before the services will be completed, a certified or cashier's check for the amount of the remaining costs, as determined by APHIS. After a final audit at the conclusion of each shipping season, any overpayment of funds would be returned to the national plant protection organization of the exporting country or region or a private export group, or held on account.

§ 319.56–7 Territorial applicability and exceptions.

(a) The regulations in this subpart apply to importations of fruits and vegetables into any area of the United States, except as provided in this section.

(b) *Importations of fruits and vegetables into Guam.*

(1) The following fruits and vegetables may be imported into Guam without treatment, except as may be required under § 319.56–3(d), and in accordance with all the requirements of this subpart as modified by this section:

(i) All leafy vegetables and root crops from the Bonin Islands, Volcano Islands, and Ryukyu Islands.

(ii) All fruits and vegetables from Palau and the Federated States of Micronesia (FSM), except *Artocarpus* spp. (breadfruit, jackfruit, and chempedak), citrus, curacao apple, guava, Malay or mountain apple (*Syzygium* spp.), mango, and papaya, and except dasheen from the Yap district of FSM and from Palau, and bitter melon (*Momordica charantia*) from Palau. The excepted products are approved for entry into Guam after treatment with an approved treatment listed in part 305.

(iii) *Allium* (without tops), artichokes, bananas, bell peppers, cabbage, carrots, celery, Chinese cabbage, citrus fruits, eggplant, grapes, lettuce, melons, okra, parsley, peas, persimmons, potatoes, rhubarb, squash (*Cucurbita maxima*), stone and pome fruits, string beans, sweet potatoes, tomatoes, turnip greens, turnips, and watermelons from Japan and Korea.

(iv) Leafy vegetables, celery, and potatoes from the Philippine Islands.

(v) Carrots (without tops), celery, lettuce, peas, potatoes, and radishes (without tops) from Australia.

(vi) Arrowroot, asparagus, bean sprouts, broccoli, cabbage, carrots (without tops), cassava, cauliflower, celery, chives, cow-cabbage, dasheen, garlic, gingerroot, horseradish, kale, kudzu, leek, lettuce, onions, Portuguese cabbage, turnip, udo, water chestnut, watercress, waterlily root, and yam bean root from Taiwan.

(vii) Lettuce from Papua New Guinea.

(viii) Carrots (without tops), celery, lettuce, loquats, onions, persimmons, potatoes, tomatoes, and stone fruits from New Zealand.

(ix) Asparagus, carrots (without tops), celery, lettuce, and radishes (without tops) from Thailand.

(x) Green corn on the cob.

(xi) All other fruits and vegetables approved for entry into any other part or port of the United States, and except any which are specifically designated in this subpart as not approved.

(2) An inspector in Guam may accept an oral application and issue an oral permit for products listed in paragraph (a) of this section, which is deemed to fulfill the requirements of § 319.56–3(b) of this subpart. The inspector may waive the documentation required in § 319.56–3 for such products whenever the inspector finds that information available from other sources meets the requirements under this subpart for the information normally supplied by such documentation.

(3) The provisions of § 319.56–11 do not apply to chestnuts and acorns imported into Guam, which are enterable into Guam without permit or other restriction under this subpart. If chestnuts or acorns imported under this paragraph are found infected, infested, or contaminated with any plant pest and are not subject to disposal under this subpart, disposition may be made in accordance with § 330.106 of this chapter.

(4) Baskets or other containers made of coconut fronds are not approved for use as containers for fruits and vegetables imported into Guam. Fruits and vegetables in such baskets or containers offered for importation into Guam will not be regarded as meeting § 319.56–3(a).

(c) *Importation of fruits and vegetables into the U.S. Virgin Islands.* (1) Fruits and vegetables grown in the British Virgin Islands may be imported into the U.S. Virgin Islands in accordance with § 319.56–3 of this subpart, except that:

(i) Such fruits and vegetables are exempt from the permit requirements of § 319.56–3(b); and

(ii) Mangoes grown in the British Virgin Islands are prohibited entry into the U.S. Virgin Islands.

(2) Okra produced in the West Indies may be imported into the U.S. Virgin Islands without treatment but are

subject to inspection at the port of arrival.

§§ 319.56–8 through 319.56–9 [Reserved]

§ 319.56–10 Importation of fruits and vegetables from Canada.

Fruits and vegetables grown in Canada may be imported into the United States subject to applicable requirements in § 319.56–3, except that, in accordance with § 319.37–2 of this part, potatoes from Newfoundland and that portion of the Municipality of Central Saanich in the Province of British Columbia east of the West Saanich Road may not be imported into the United States.

§ 319.56–11 Importation of dried, cured, or processed fruits, vegetables, nuts, and legumes.

(a) Dried, cured, or processed fruits and vegetables (except frozen fruits and vegetables), including cured figs and dates, raisins, nuts, and dried beans and peas, may be imported without permit, phytosanitary certificate, or other compliance with this subpart, except as specifically provided otherwise in this section or elsewhere in this part.

(b) *Acorns and chestnuts.* (1) *From countries other than Canada and Mexico; treatment required.* Acorns and chestnuts intended for purposes other than propagation, except those grown in and shipped from Canada and Mexico, must be imported into the United States under permit, and subject to all the requirements of § 319.56–3, and must be treated with an approved treatment listed in part 305 of this chapter.[2]

(2) *From Canada and Mexico.* Acorns and chestnuts grown in and shipped from Canada and Mexico for purposes other than propagation may be imported in accordance with paragraph (a) of this section.

(3) *For propagation.* Acorns and chestnuts from any country may be imported for propagation only in accordance with the applicable requirements in §§ 319.37 through 319.37–14 of this part.

(c) *Macadamia nuts.* Macadamia nuts in the husk or shell are prohibited importation into the United States unless the macadamia nuts were produced in, and imported from, St. Eustatius.

§ 319.56–12 Importation of frozen fruits and vegetables.

Frozen fruits and vegetables may be imported into the United States in accordance with § 319.56–3. Such fruits and vegetables must be held at a temperature not higher than 20 °F during shipping and upon arrival in the United States, and in accordance with the requirements for importing frozen fruits and vegetables in part 305 of this chapter. The importation from foreign countries of frozen fruits and vegetables is not authorized when such fruits and vegetables are subject to attack in the area of origin by plant pests that may not, in the judgment of the Administrator, be destroyed by quick freezing.

§ 319.56–13 Fruits and vegetables allowed importation subject to specified conditions.

(a) The following fruits and vegetables may be imported in accordance with § 319.56–3 and any additional requirements specified in this section.

Country/locality of origin	Common name	Botanical name	Plant part(s)	Additional requirements
Algeria	Pineapple	*Ananas comosus*	Fruit	(b)(2)(vi).
Angola	Pineapple	*Ananas comosus*	Fruit	(b)(2)(vi).
Antigua and Barbuda	Pineapple	*Ananas comosus*	Fruit	(b)(2)(vi).
Argentina	Pineapple	*Ananas comosus*	Fruit	(b)(2)(vi).
Australia (Tasmania only).	Cucurbit	As defined in 319.56–2	Fruit	(b)(3).
	Pineapple	*Ananas comosus*	Fruit	(b)(2)(vi).
Austria	Asparagus, white	*Asparagus officinalis*	Shoot	(b)(4)(iii).
Bahamas	Cucurbit	As defined in 319.56–2	Fruit	(b)(3).
	Pineapple	*Ananas comosus*	Fruit	(b)(2)(vi).
Barbados	Cucurbit	As defined in 319.56–2	Fruit	(b)(3).
	Pineapple	*Ananas comosus*	Fruit	(b)(2)(vi).
Belgium	Apricot	*Prunus armeniaca*	Fruit	(b)(5)(xiv).
	Cucumber	*Cucumis sativus*	Fruit	(b)(3).
	Fig	*Ficus carica*	Fruit	(b)(5)(xiv).
	Nectarine	*Prunus persica* var. *nucipersica*	Fruit	(b)(5)(xiv).
	Peach	*Prunus persica*	Fruit	(b)(5)(xiv).
	Plum	*Prunus domestica*	Fruit	(b)(5)(xiv).
Belize	Eggplant	*Solanum melongena*	Fruit	(b)(3).
	Papaya	*Carica papaya*	Fruit	(b)(1)(i), (b)(2)(iii).
	Pineapple	*Ananas comosus*	Fruit	(b)(2)(vi).
	Rambutan	*Nephelium lappaceum*	Fruit	(b)(2)(i), (b)(5)(iii).
	Tomato	*Lycopersicon esculentum*	Fruit	(b)(3).
Benin	Pineapple	*Ananas comosus*	Fruit	(b)(2)(vi).
Bolivia	Pineapple	*Ananas comosus*	Fruit	(b)(2)(vi).
Brazil	Cantaloupe	*Cucumis melo* var. *cantaloupensis*	Fruit	(b)(1)(v), (b)(3).
	Cassava	*Manihot esculenta*	Fruit	(b)(2)(vii).
	Honeydew melon	*Cucumis melo*	Fruit	(b)(1)(v), (b)(3).
	Pineapple	*Ananas comosus*	Fruit	(b)(2)(vi).
	Watermelon	*Citrullus lanatus* var. *lanatus*	Fruit	(b)(1)(v), (b)(3).
Burkina Faso	Pineapple	*Ananas comosus*	Fruit	(b)(2)(vi).
Cameroon	Pineapple	*Ananas comosus*	Fruit	(b)(2)(vi).
Cayman Islands	Cucurbit	Cucurbitaceae	Fruit	(b)(3).
	Papaya	*Carica papaya*	Fruit	(b)(3).
	Pineapple	*Ananas comosus*	Fruit	(b)(2)(vi).
Chile	African horned cucumber.	*Cucumis metuliferus*	Fruit	(b)(2)(i).
	Pineapple	*Ananas comosus*	Fruit	(b)(2)(vi).

[2] Acorns and chestnuts imported into Guam are subject to the requirements of § 319.56–7(b).

Country/locality of origin	Common name	Botanical name	Plant part(s)	Additional requirements
China	Litchi	*Litchi chinensis*	Fruit	(b)(2)(v).
Columbia	Eggplant	*Solanum melongena*	Fruit	(b)(3).
	Pineapple	*Ananas comosus*	Fruit	(b)(2)(vi).
	Yellow pitaya	*Selinicereus megalanthus*	Fruit	(b)(5)(xvi).
Congo, Democratic Republic of.	Pineapple	*Ananas comosus*	Fruit	(b)(2)(vi).
Cook Islands	Ginger	*Zingiber officinalis*	Root	(b)(2)(ii).
	Banana	*Musa* spp	Fruit	(b)(4)(i).
	Pineapple	*Ananas comosus*	Fruit	(b)(2)(vi), (b)(5)(vii).
Costa Rica	Cucurbit	Cucurbitaceae	Fruit	(b)(2)(iii), (b)(3).
	Eggplant	*Solanum melongena*	Fruit	(b)(3).
	Pineapple	*Ananas comosus*	Fruit	(b)(2)(vi).
	Rambutan	*Nephelium lappaceum*	Fruit	(b)(2)(i), (b)(5)(iii).
	Tomato	*Lycopersicon esculentum*	Fruit	(b)(3).
Cote d'Ivoire	Pineapple	*Ananas comosus*	Fruit	(b)(2)(vi).
Cyprus	Lemon	*Citrus limon*	Fruit	(b)(3).
	Lime	*Citrus aurantiifolia* and *Citrus limettioides*	Fruit	(b)(3).
	Tomato	*Lycopersicon esculentum*	Fruit	(b)(3).
Dominica	Grapefruit	*Citrus paradisi*	Fruit	(b)(3).
	Orange, sweet	*Citrus sinensis*	Fruit	(b)(3).
	Papaya	*Carica papaya*	Fruit	(b)(2)(vi).
	Pineapple	*Ananas comosus*	Fruit	(b)(2)(vi).
	Tangerine	*Citrus reticulata*	Fruit	(b)(3).
Dominican Republic	Cucurbit	Cucurbitaceae	Fruit	(b)(2)(iii), (b)(3).
	Papaya	*Carica papaya*	Fruit	(b)(2)(iii), (b)(2)(vi).
	Pineapple	*Ananas comosus*	Fruit	(b)(2)(iii), (b)(2)(vi).
	Ethrog	*Citrus medica*	Fruit	(b)(3).
	Honeydew melon	*Cucumis melo*	Fruit	(b)(3).
Ecuador	Pineapple	*Ananas comosus*	Fruit	(b)(2)(iii), (b)(2)(vi).
Egypt	Pineapple	*Ananas comosus*	Fruit	(b)(2)(vi).
El Salvador	Cucurbit	Cucurbitaceae	Fruit	(b)(3).
	Eggplant	*Solanum melongena*	Fruit with stem	(b)(3).
	Fennel	*Foeniculum vulgare*	Leaf and stem	(b)(2)(i).
	German chamomile	*Matricaria recutita* and *Matricaria chamomilla.*	Flower and leaf	(b)(2)(i).
	Oregano or sweet marjoram.	*Origanum* spp	Leaf and stem	(b)(2)(i).
	Parsley	*Petroselinum crispum*	Leaf and stem	(b)(2)(i).
	Pineapple	*Ananas comosus*	Fruit	(b)(2)(vi).
	Rambutan	*Nephelium lappaceum*	Fruit	(b)(2)(i), (b)(5)(iii).
	Rosemary	*Rosmarinus officinalis*	Leaf and stem	(b)(2)(i).
	Tomato	*Lycopersicon esculentum*	Fruit	(b)(3).
	Waterlily or lotus	*Nelumbo nucifera*	Roots without soil	(b)(2)(i).
	Yam-bean or Jicama	*Pachyrhizus* spp	Roots without soil	(b)(2)(i).
Fiji	Pineapple	*Ananas comosus*	Fruit	(b)(2)(vi), (b)(5)(vii).
France	Bean	*Glycine max* (Soybean); *Phaseolus coccineus,* (Scarlet or french runner bean); *Phaseolus lunatus* (lima bean); *Phaseolus vulgaris* (green bean, kidney bean, navy bean, pinto bean, red bean, string bean, white bean); *Vicia faba* (faba bean, broadbean, haba, habichuela, horsebean, silkworm bean, windsor bean; *Vigna radiata* (mung bean); *Vigna unguiculata* (includes: ssp. *cylindrica*, ssp. *dekintiana*, ssp. *sesquipedalis* (yard-long bean, asparagus bean, long bean) ssp. *unguiculata* (southern pea, black-eyed bean, black-eyed pea, cowpea, crowder pea)).	Fruit	(b)(5)(xiii).
	Cucurbit	Cucurbitaceae	Fruit	(b)(3).
	Tomato	*Lycopersicon esculentum*	Fruit, stem and leaf	(b)(4)(ii).
French Guiana	Pineapple	*Ananas comosus*	Fruit	(b)(2)(vi).
French Polynesia, including Tahiti.	Pineapple	*Ananas comosus*	Fruit	(b)(2)(vi), (b)(5)(vii).
Ghana	Pineapple	*Ananas comosus*	Fruit	(b)(2)(vi).
Greece	Tomato	*Lycopersicon esculentum*	Fruit	(b)(3).
Grenada	Atemoya	*Annona squamosa* x *A. cherimola*	Fruit	(b)(3).
	Cherimoya	*Annona cherimola*	Fruit	(b)(3).
	Custard apple	*Annona reticulata*	Fruit	(b)(3).
	Cucurbit	Cucurbitaceae	Fruit	(b)(3).
	Papaya	*Carica papaya*	Fruit	(b)(2)(vi).
	Pineapple	*Ananas comosus*	Fruit	(b)(2)(vi).

Country/locality of origin	Common name	Botanical name	Plant part(s)	Additional requirements
	Soursop	*Annona muricata*	Fruit	(b)(3).
	Sugar apple	*Annona squamosa*	Fruit	(b)(3).
Guadeloupe	Cucurbit	Cucurbitaceae	Fruit	(b)(3).
	Papaya	*Carica papaya*	Fruit	(b)(2)(vi).
	Pineapple	*Ananas comosus*	Fruit	(b)(2)(vi).
Guatemala	Cucurbit	Cucurbitaceae	Fruit	(b)(2)(iii), (b)(3).
	Eggplant	*Solanum melongena*	Fruit	(b)(3).
	Fennel	*Foeniculum vulgare*	Leaf and stem	(b)(2)(i).
	German chamomile	*Matricaria recutita* and *Matricaria chamomilla.*	Flower and leaf	(b)(2)(i).
	Naranjilla	*Solanum quitoense*	Fruit	(b)(3).
	Papaya	*Carica papaya*	Fruit	(b)(1)(i), (b)(2)(iii).
	Pineapple	*Ananas comosus*	Fruit	(b)(2)(vi).
	Rambutan	*Nephelium lappaceum*	Fruit	(b)(2)(i), (b)(5)(iii).
	Rosemary	*Rosmarinus officinalis*	Leaf and stem	(b)(2)(i).
	Tomato	*Lycopersicon esculentum*	Fruit	(b)(3), (b)(4)(ii).
	Waterlily or lotus	*Nelumbo nucifera*	Roots without soil	(b)(2)(i).
	Yam-bean or jicama	*Pachyrhizus* spp	Roots without soil	(b)(2)(i).
Guinea	Pineapple	*Ananas comosus*	Fruit	(b)(2)(vi).
Guyana	Pineapple	*Ananas comosus*	Fruit	(b)(2)(vi).
Haiti	Cucurbit	Cucurbitaceae	Fruit	(b)(3).
	Papaya	*Carica papaya*	Fruit	(b)(2)(vi).
	Pineapple	*Ananas comosus*	Fruit	(b)(2)(vi).
Honduras	Basil	*Ocimum basilicum*	Leaf and stem	(b)(2)(i), (b)(5)(iv).
	Cucurbit	Cucurbitaceae	Fruit	(b)(2)(iii), (b)(3).
	Eggplant	*Solanum melongena*	Fruit	(b)(3).
	German chamomile	*Matricaria recutita* and *Matricaria chamomilla.*	Flower and leaf	(b)(2)(i).
	Oregano or sweet marjoram.	*Origanum* spp	Leaf and stem	(b)(2)(i).
	Pineapple	*Ananas comosus*	Fruit	(b)(2)(vi).
	Rambutan	*Nephelium lappaceum*	Fruit	(b)(2)(i), (b)(5)(iii).
	Tomato	*Lycopersicon esculentum*	Fruit	(b)(3), (b)(4)(ii).
	Waterlily or lotus	*Nelumbo nucifera*	Roots without soil	(b)(2)(i).
	Yam-bean or Jicama	*Pachyrhizus* spp	Roots without soil	(b)(2)(i).
India	Litchi	*Litchi chinensis*	Fruit	(b)(2)(v).
Indonesia	Dasheen	*Colocasia* spp., *Alocasia* spp., and *Xanthosoma* spp.	Tuber	(b)(2)(iv).
Israel	Melon	*Cucumis melo* only	Fruit	(b)(5)(viii).
	Tomato (green)	*Lycopersicon esculentum*	Fruit	(b)(3), (b)(4)(ii) or (b)(3), (b)(5)(xvii).
	Tomato (red or pink)	*Lycopersicon esculentum*	Fruit	(b)(3), (b)(5)(ix) or (b)(3), (b)(5)(xvii).
Italy	Cucurbit	Cucurbitaceae	Fruit	(b)(3).
	Garlic	*Allium sativum*	Bulb	(b)(5)(iv).[1]
	Pineapple	*Ananas comosus*	Fruit	(b)(2)(vi).
	Tomato	*Lycopersicon esculentum*	Fruit	(b)(3), (b)(4)(ii).
Jamaica	Cucurbit	Cucurbitaceae	Fruit	(b)(2)(iii), (b)(3).
	Papaya	*Carica papaya*	Fruit	(b)(2)(iii), (b)(2)(iv), (b)(3).
	Pineapple	*Ananas comosus*	Fruit	(b)(2)(vi).
Japan	Bean (garden)	*Phaseolus vulgaris*	Fruit	(b)(2)(x), (b)(5)(xiv).
	Cucumber	*Cucumis sativas*	Fruit	(b)(2)(x), (b)(5)(xv).
	Pepper	*Capsicum* spp	Fruit	(b)(2)(x), (b)(5)(xiv).
	Sand pear	*Pyrus pyrifolia* var. *culta*	Fruit	(b)(5)(x).
	Tomato	*Lycopersicon esculentum*	Fruit	(b)(2)(x), (b)(5)(xv).
Kenya	Pineapple	*Ananas comosus*	Fruit	(b)(2)(vi).
Liberia	Pineapple	*Ananas comosus*	Fruit	(b)(2)(vi).
Mali	Pineapple	*Ananas comosus*	Fruit	(b)(2)(vi).
Martinique	Cucurbit	Cucurbitaceae	Fruit	(b)(3).
	Papaya	*Carica papaya*	Fruit	(b)(2)(vi).
	Pineapple	*Ananas comosus*	Fruit	(b)(2)(vi).
Mauritania	Pineapple	*Ananas comosus*	Fruit	(b)(2)(vi).
Mexico	Coconut	*Cocos nucifera*	Fruit with milk and husk.[2]	(b)(5)(v).
	Fig	*Ficus carica*	Fruit	(b)(1)(iii), (b)(2)(i).
	Pitaya	*Hylocereus* spp.	Fruit	(b)(1)(iv), (b)(2)(i).
	Rambutan	*Nephelium lappaceum*	Fruit	(b)(2)(i), (b)(5)(iii).
Montserrat	Cucurbit	Cucurbitaceae	Fruit	(b)(3).
	Papaya	*Carica papaya*	Fruit	(b)(2)(vi).
	Pineapple	*Ananas comosus*	Fruit	(b)(2)(vi).
Morocco	Pineapple	*Ananas comosus*	Fruit	(b)(2)(vi).
Morocco and Western Sahara.	Tomato	*Lycopersicon esculentum*	Fruit, stem, and leaf	(b)(4)(ii).

Country/locality of origin	Common name	Botanical name	Plant part(s)	Additional requirements
Netherlands	Cucurbit	*Cucurbitaceae*	Fruit	(b)(2)(iii), (b)(3).
	Peach	*Prunus persica*	Fruit	(b)(5)(xiv).
	Pepper	*Capsicum* spp	Fruit	(b)(5)(xi).
Netherlands Antilles	Pineapple	*Ananas comosus*	Fruit	(b)(2)(vi).
New Zealand	Cucurbit	Cucurbitaceae	Fruit	(b)(3).
	Passion fruit	*Passiflora* spp	Fruit	(b)(2)(vi).
Nicaragua	Cucurbit	Cucurbitaceae	Fruit	(b)(3).
	Eggplant	*Solanum melongena*	Fruit with stem	(b)(3).
	Fennel	*Foeniculum vulgare*	Leaf and stem	(b)(2)(i).
	German chamomile	*Matricaria recutita and Matricaria chamomilla.*	Flower and leaf	(b)(2)(i).
	Naranjilla	*Solanum quitoense*	Fruit	(b)(3).
	Pineapple	*Ananas comosus*	Fruit	(b)(2)(vi).
	Rambutan	*Nephelium lappaceum*	Fruit	(b)(2)(i), (b)(5)(iii).
	Tomato	*Lycopersicon esculentum*	Fruit	(b)(3), (b)(4)(ii).
	Waterlily or lotus	*Nelumbo nucifera*	Roots without soil	(b)(2)(i).
	Yam-bean or Jicama	*Pachyrhizus* spp	Roots without soil	(b)(2)(i).
Niger	Pineapple	*Ananas comosus*	Fruit	(b)(2)(vi).
Nigeria	Pineapple	*Ananas comosus*	Fruit	(b)(2)(vi).
Panama	Cucurbit	As defined in 319.56–2	Fruit	(b)(2)(iii), (b)(3).
	Eggplant	*Solanum melongena*	Fruit	(b)(3).
	Rambutan	*Nephelium lappaceum*	Fruit	(b)(2)(i), (b)(5)(iii).
	Pineapple	*Ananas comosus*	Fruit	(b)(2)(vi).
	Tomato	*Lycopersicon esculentum*	Fruit	(b)(3), (b)(4)(ii).
Paraguay	Pineapple	*Ananas comosus*	Fruit	(b)(2)(vi).
Peru	Honeydew melon	*Cucumis melo*	Fruit	(b)(1)(v), (b)(2)(i), (b)(3), (b)(5)(xii).
	Pineapple	*Ananas comosus*	Fruit	(b)(2)(vi).
Philippines	Pineapple	*Ananas comosus*	Fruit	(b)(5)(vii).
Portugal (including Azores).	Pineapple	*Ananas comosus*	Fruit	(b)(2)(vi).
Portugal (Azores only).	Tomato	*Lycopersicon esculentum*	Fruit	(b)(3), (b)(4)(ii).
Republic of Korea	Dasheen	*Colocasia* spp., *Alocasia* spp., and *Xanthosoma* spp.	Root	(b)(2)(iv).
	Sand pear	*Pyrus pyrifolia* var. *culta*	Fruit	(b)(5)(x).
	Strawberry	Fragaria spp	Fruit	(b)(5)(ii).
St. Kitts and Nevis	Cucurbit	As defined in 319.56–2	Fruit	(b)(3).
	Papaya	*Carica papaya*	Fruit	(b)(2)(vi).
	Pineapple	*Ananas comosus*	Fruit	(b)(2)(vi).
St. Lucia	Cucurbit	As defined in 319.56–2	Fruit	(b)(3).
	Papaya	*Carica papaya*	Fruit	(b)(2)(vi).
	Pineapple	*Ananas comosus*	Fruit	(b)(2)(vi).
St. Martin	Papaya	*Carica papaya*	Fruit	(b)(2)(vi).
	Barbados cherry	*Malpighia glabra*	Fruit	(b)(2)(vi).
St. Vincent	Cucurbit	As defined in 319.56–2	Fruit	(b)(3).
	Papaya	*Carica papaya*	Fruit	(b)(2)(vi).
	Pineapple	*Ananas comosus*	Fruit	(b)(2)(vi).
Senegal	Pineapple	*Ananas comosus*	Fruit	(b)(2)(vi).
Sierra Leone	Pineapple	*Ananas comosus*	Fruit	(b)(2)(vi).
South Africa	Pineapple	*Ananas comosus*	Fruit	(b)(2)(vi).
Spain	Cucumber	*Cucumis sativus*	Fruit	(b)(3).
	Cucurbit	Cucurbitaceae	Above ground parts	(b)(3).
	Eggplant	*Solanum melongena*	Fruit with stem	(b)(3).
	Garlic	*Allium sativum*	Bulb	(b)(5)(vi).[1]
	Lemon	*Citrus limon*	Fruit	(b)(3).
	Lettuce	*Lactuca* spp	Above ground parts	(b)(3).
	Pineapple	*Ananas comosus*	Fruit	(b)(2)(vi).
	Tomato	*Lycopersicon esculentum*	Fruit	(b)(4)(ii).
	Watermelon	*Citrullus lanatus* var. *lanatus*	Fruit	(b)(3).
Sri Lanka	Pineapple	*Ananas comosus*	Fruit	(b)(2)(vi), (b)(5)(vii).
Taiwan	Brassica	*Brassica oleracea*	Above ground parts	(b)(2)(viii).
	Carambola	*Averrhoa carambola*	Fruit	(b)(2)(ix), (b)(5)(xviii).
	Litchi	*Litchi chinensis*	Fruit	(b)(2)(v).
Thailand	Pineapple	*Ananas comosus*	Fruit	(b)(2)(vi), (b)(5)(vii).
Togo	Pineapple	*Ananas comosus*	Fruit	(b)(2)(vi).
Trinidad and Tobago	Cassava	*Manihot exculenta*	Fruit	(b)(2)(vi).
	Cucurbit	Cucurbitaceae	Above ground parts	(b)(2)(iii), (b)(3).
	Eggplant	*Solanum melongena*	Fruit	(b)(3).
	Cucurbit	Cucurbitaceae	Fruit	(b)(3)
	Lime, sour	*Citrus aurantiifolia*	Fruit	(b)(3).
	Papaya	*Carica papaya*	Fruit	(b)(2)(vi).
	Pineapple	*Ananas comosus*	Fruit	(b)(2)(vi).

Country/locality of origin	Common name	Botanical name	Plant part(s)	Additional requirements
Tunisia	Pineapple	*Ananas comosus*	Fruit	(b)(2)(vi).
Turkey	Pineapple	*Ananas comosus*	Fruit	(b)(2)(vi).
Uruguay	Pineapple	*Ananas comosus*	Fruit	(b)(2)(vi).
Venezuela	Cantaloupe	*Cucumis melo* var. *cantaloupensis*	Fruit	(b)(1)(v), (b)(3).
	Honeydew melon	*Cucumis melo*	Fruit	(b)(1)(v), (b)(3).
	Pineapple	*Ananas comosus*	Fruit	(b)(2)(vi).
	Watermelon	*Citrullus lanatus* var. *lanatus*	Fruit	(b)(1)(v), (b)(3).

[1] Also eligible for importation if treated with an approved treatment listed in part 305 of this chapter.
[2] Fruit without husk may be imported subject to the requirements of § 319.56–5.

(b) Additional restrictions for applicable fruits and vegetables as specified in paragraph (a) of this section.

(1) *Pest-free areas.*

(i) The commodity must be from an area that meets the requirements of § 319.56–5 for freedom from the Mediterranean fruit fly (Medfly), and must meet applicable requirements of § 319.56–5.

(ii) The commodity must be from an area that meets the requirements of § 319.56–5 for freedom from the Mediterranean fruit fly (Medfly), and must meet applicable requirements of § 319.56–5. Fruit from outside Medfly-free areas must be treated in accordance with an approved treatment listed in part 305 of this chapter.

(iii) The commodity must be from an area that meets the requirements of § 319.56–5 for freedom from fruit flies, and must meet applicable requirements of § 319.56–5.

(iv) The commodity must be from an area that meets the requirements of § 319.56–5 for freedom from fruit flies, and must meet applicable requirements of § 319.56–5. The phytosanitary certificate must also include an additional declaration stating: ''Upon inspection, these articles were found free of *Dysmicoccus neobrevipes* and *Planococcus minor.*''

(v) The commodity must be from an area that meets the requirements of § 319.56–5 for freedom from the South American cucurbit fly, and must meet applicable requirements of § 319.56–5.

(2) *Restricted importation and distribution.*

(i) Prohibited entry into Puerto Rico, Virgin Islands, Hawaii, and Guam. Cartons in which commodity is packed must be stamped ''Not for importation into or distribution within PR, VI, HI, or Guam.''

(ii) Prohibited entry into Puerto Rico, Virgin Islands, and Guam. Cartons in which commodity is packed must be stamped ''Not for importation into or distribution within PR, VI, or Guam.''

(iii) Prohibited entry into Hawaii. Cartons in which commodity is packed must be stamped ''Not for importation into or distribution within HI.''

(iv) Prohibited entry into Guam. Cartons in which commodity is packed must be stamped ''Not for importation into or distribution within Guam.''

(v) Prohibited entry into Florida. Cartons in which commodity is packed must be stamped ''Not for importation into or distribution within FL.''

(vi) Prohibited entry into Hawaii.

(vii) Prohibited entry into Puerto Rico, Virgin Islands, and Hawaii.

(viii) Prohibited entry into Alaska.

(ix) Prohibited entry into Florida.

(x) Allowed importation into Hawaii only.

(3) *Commercial shipments only.*

(4) *Stage of development.*

(i) The bananas must be green at the time of export. Inspectors at the port of arrival will determine that the bananas were green at the time of export if:

(1) Bananas shipped by air are still green upon arrival in the United States; and

(2) bananas shipped by sea are either still green upon arrival in the United States or yellow but firm.

(ii) The tomatoes must be green upon arrival in the United States. Pink or red fruit may only be imported in accordance with other provisions of § 319.56–13 or § 319.56–28 of this subpart.

(iii) No green may be visible on the shoot.

(5) *Other conditions.*

(i) Must be accompanied by a phytosanitary certificate issued by the NPPO of the country of origin with an additional declaration stating that the commodity is apparently free of *Acrolepiopsis assectella.*

(ii) Entry permitted only from September 15 to May 31, inclusive, to prevent the introduction of a complex of exotic pests including, but not limited to a thrips (*Haplothrips chinensis*) and a leafroller (*Capua tortrix*).

(iii) Must be accompanied by a phytosanitary certificate issued by the NPPO of the country of origin with an additional declaration stating that the fruit is free from *Coccus moestus, C. viridis, Dysmicoccus neobrevipes, Planococcus lilacinus, P. minor,* and *Psedococcus landoi;* and all damaged fruit was removed from the shipment prior to export under the supervision of the NPPO.

(iv) Must be accompanied by a phytosanitary certificate issued by the NPPO of the country of origin with an additional declaration stating that the fruit is free from *Planococcus minor.*

(v) Must be accompanied by a phytosanitary certificate issued by the NPPO of the country of origin with an additional declaration stating that the fruit is of the Malayan dwarf variety or Maypan variety (=F_1 hybrid, Malayan Dwarf × Panama Tall) (which are resistant to lethal yellowing disease) based on verification of the parent stock.

(vi) Must be accompanied by a phytosanitary certificate issued by the NPPO of the country of origin with an additional declaration stating that the commodity is free of living stages of *Brachycerus* spp. and *Dyspessa ulula* (Bkh.), based on field inspection and certification and reexamination at the port of departure prior to exportation.

(vii) Only the Tahiti Queen cultivar and varieties which are at least 50 percent smooth Cayenne by lineage are admissible. The importer or the importer's agent must provide the inspector with documentation that establishes the variety's lineage. This document is necessary only with the first importation.

(viii) Prohibited from the Palestinian controlled portions of the West Bank and Gaza Strip; otherwise, must be accompanied by a phytosanitary certificate which declares that the melons were grown in approved areas in the Arava Valley or the Kadesh-Barnea area of Israel, the fields where the melons were grown were inspected prior to harvest, and the melons were inspected prior to export and found free of pests.

(ix) Prohibited from the Palestinian controlled portions of the West Bank and Gaza Strip; otherwise must be accompanied by a phytosanitary certificate which declares that only tomato varieties 111, 121, 124, 139, and 144 are included in the shipment and

the tomatoes were packed into fruit fly proof containers within 24 hours after harvesting.

(x) Only precleared shipments are authorized. The shipment must be accompanied by a PPQ Form 203 signed by the APHIS inspector on site in the exporting country.

(xi) Must be accompanied by a phytosanitary certificate stating: ''The peppers in this shipment have been inspected and verified as being grown in greenhouses in the Netherlands.''

(xii) Must be accompanied by a phytosanitary certificate issued by the National Plant Protection Organization of the exporting country that includes a declaration indicating that the fruit was inspected and found free of the gray pineapple mealybug (*Dysmicoccus neobrevipes*).

(xiii) Must be accompanied by a phytosanitary certificate issued by the National Plant Protection Organization of the exporting country that includes a declaration certifying that the products were grown and packed in the exporting country.

(xiv) Must be accompanied by a phytosanitary certificate issued by the National Plant Protection Organization of the exporting country that includes a declaration certifying that the products were grown in a greenhouse in the exporting country.

(xv) Must be accompanied by a phytosanitary certificate issued by the National Plant Protection Organization of the exporting country that includes a declaration certifying that the products were grown in a greenhouse in the exporting country on Honshu Island or north thereof.

(xvi) Only precleared shipments that have been treated with an approved treatment listed in 7 CFR part 305 are authorized. The shipment must be accompanied by a PPQ Form 203 signed by the APHIS inspector on site in the exporting country.

(xvii) Must be accompanied by a phytosanitary certificate issued by the National Plant Protection Organization of Israel that declares ''These tomatoes were grown in registered greenhouses in the Arava Valley of Israel.''

(xviii) Must be treated with an approved treatment listed in 7 CFR part 305.

§§ 319.56–14 through 319.56–19 [Reserved]

§ 319.56–20 Apples and pears from Australia (including Tasmania) and New Zealand.

Apples and pears from Australia (including Tasmania) and New Zealand may be imported only in accordance with this section and other applicable provisions of this subpart.

(a) *Inspection and treatment for pests of the family Tortricidae.* An inspector must take a biometrically designed sample from each lot of apples or pears that are offered for entry into the United States. If inspection of the sample discloses that pests of the family Tortricidae (fruit-leaf roller moths) are not present in the lot sampled, the fruit may be imported without treatment. If any such pests are found upon inspection, the lot must be treated with methyl bromide as prescribed in part 305 of this chapter.

(b) *Treatment of apples and pears from Australia for fruit flies.* (1) Apples from Australia (including Tasmania) may be imported without treatment for the following fruit flies if they are imported from an area in Australia that meets the requirements of § 319.56–5 for pest freedom: Mediterranean fruit fly (*Ceratitis capitata*), the Queensland fruit fly (*Bactrocera tryoni*), *Bactrocera aquilonis*, and *B. neohumeralis*.

(2) Pears from Australia (including Tasmania) may be imported without treatment for the following fruit flies if they are imported from an area in Australia that meets the requirements of § 319.56–5 for pest freedom: Mediterranean fruit fly (*Ceratitis capitata*), the Queensland fruit fly (*Dacus tryoni*), *Bactrocera jarvisi*, and *B. neohumeralis*.

(3) Apples and pears from Australia that do not originate from an area that is free of fruit flies must be treated for such pests in accordance with part 305 of this chapter. If an authorized treatment does not exist for a specific fruit fly, the importation of such apples and pears is prohibited.

§ 319.56–21 Okra from certain countries.

Okra from Brazil, Colombia, Ecuador, Guyana, Mexico, Peru, Suriname, Venezuela, and the West Indies may be imported into the United States in accordance with this section and other applicable provisions of this subpart.

(a) *Importations into pink bollworm generally infested or suppressive areas in the United States.* Okra may be imported into areas defined in § 301.52–2a as pink bollworm generally infested or suppressive areas, provided the okra is imported in accordance with the requirements of § 319.56–3. Upon entry into the United States, such okra is immediately subject to the requirements of Subpart—Pink Bollworm (§§ 301.52 through 301.52–10) of this chapter.

(b) *Importations into areas south of the 38th parallel that are not pink bollworm generally infested or suppressive areas.*

(1) During December 1 through May 15, inclusive, okra may be imported into areas of Alabama, Arkansas, Florida, Georgia, Louisiana, Mississippi, Nevada, North Carolina, South Carolina, Tennessee, or any part of Illinois, Kentucky, Missouri, or Virginia south of the 38th parallel subject to the requirements of § 319.56–3.

(2) During May 16 through November 30, inclusive, okra may be imported into areas of Alabama, Arkansas, Florida, Georgia, Louisiana, Mississippi, Nevada, North Carolina, South Carolina, Tennessee, or any part of Illinois, Kentucky, Missouri, or Virginia south of the 38th parallel if treated for the pink bollworm in accordance with an approved treatment listed in part 305 of this chapter.

(c) *Importations into areas north of the 38th parallel.* Okra may be imported into Alaska, Colorado, Connecticut, Delaware, Hawaii, Idaho, Indiana, Iowa, Kansas, Maine, Maryland, Massachusetts, Michigan, Minnesota, Montana, Nebraska, New Hampshire, New Jersey, New York, North Dakota, Ohio, Oregon, Pennsylvania, Rhode Island, South Dakota, Utah, Vermont, Washington, West Virginia, Wisconsin, Wyoming, the District of Columbia, or the U.S. Virgin Islands, or any part of Illinois, Kentucky, Missouri, or Virginia, north of the 38th parallel, subject to the requirements of § 319.56–3.

(d) *Importations into areas of California that are not are not pink bollworm generally infested or suppressive areas.*

(1) During January 1 through March 15, inclusive, okra may be imported into California subject to the requirements of § 319.56–3.

(2) During March 16 through December 31, inclusive, okra may be imported into California if it is treated for the pink bollworm in accordance with an approved treatment listed in part 305 of this chapter.

(e) *Imports from Andros Island of the Bahamas.* Okra produced on Andros Island, Commonwealth of the Bahamas, may be imported into the United States in accordance with § 319.56–3.

§ 319.56–22 Apples and pears from certain countries in Europe.

(a) *Importations allowed.* The following fruits may be imported into the United States in accordance with this section and other applicable provisions of this subpart:

(1) Apples from Belgium, Denmark, France, Germany, Great Britain, Italy, the Netherlands, Northern Ireland, Norway, Portugal, the Republic of Ireland, Spain, Sweden, and Switzerland;

(2) Pears from Belgium, France, Great Britain, Italy, the Netherlands, Portugal, and Spain.

(b) *Trust fund agreement.* Except as provided in paragraph (h) of this section, the apples or pears may be imported only if the national plant protection organization of the exporting country has entered into a trust fund agreement with APHIS in accordance with § 319.56–6.

(c) *Responsibilities of the exporting country.* The apples or pears may be imported in any single shipping season only if all of the following conditions are met:

(1) Officials of the plant protection organization must survey each orchard producing apples or pears for shipment to the United States at least twice between spring blossoming and harvest. If the officials find any leaf miners that suggest the presence of *Leucoptera malifoliella* in an orchard, the officials must reject any fruit harvested from that orchard during that growing season for shipment to the United States. If the officials find evidence in an orchard of any other plant pest referred to in paragraph (g) of this section, they must ensure that the orchard and all other orchards within 1 kilometer of that orchard will be treated for that pest with a pesticide approved by the APHIS, in accordance with label directions and under the direction of the plant protection organization. If the officials determine that the treatment program has not been applied as required or is not controlling the plant pest in the orchard, they must reject any fruit harvested from that orchard during that growing season for shipment to the United States.

(2) The apples or pears must be identified to the orchard from which they are harvested (the producing orchard) until the fruit arrives in the United States.

(3) The apples or pears must be processed and inspected in approved packing sheds as follows:

(i) Upon arrival at the packing shed, the apples or pears must be inspected for insect pests as follows: For each grower lot (all fruit delivered for processing from a single orchard at a given time), packing shed technicians must examine all fruit in one carton on every third pallet (there are approximately 42 cartons to a pallet), or at least 80 apples or pears in every third bin (if the fruit is not in cartons on pallets). If they find any live larva or pupa of *Leucoptera malifoliella*, they must reject the entire grower lot for shipment to the United States, and the plant protection service must reject for shipment any additional fruit from the producing orchard for the remainder of the shipping season.

(ii) The apples or pears must be sorted, sized, packed, and otherwise handled in the packing sheds on grading and packing lines used solely for fruit intended for shipment to the United States, or, if on grading and packing lines used previously for other fruit, only after the lines have been washed with water.

(iii) During packing operations, apples and pears must be inspected for insect pests as follows: All fruit in each grower lot must be inspected at each of two inspection stations on the packing line by packing shed technicians. In addition, one carton from every pallet in each grower lot must be inspected by officials of the plant protection service. If the inspections reveal any live larva or pupa of *Leucoptera malifoliella*, the entire grower lot must be rejected for shipment to the United States, and the plant protection service must reject for shipment any additional fruit from the producing orchard for the remainder of that shipping season. If the inspections reveal any other insect pest referred to in paragraph (g) of this section, and a treatment authorized in part 305 of this chapter is available, the fruit will remain eligible for shipment to the United States if the entire grower lot is treated for the pest under the supervision of an inspector. However, if the entire grower lot is not treated in this manner, or if a plant pest is found for which no treatment authorized in part 305 of this chapter is available, the entire grower lot will be rejected for shipment to the United States.

(4) Apples or pears that pass inspection at approved packing sheds must be presented to an inspector for preclearance inspection as prescribed in paragraph (d) of this section or for inspection in the United States as prescribed in paragraph (h) of this section.

(5) Apples and pears presented for preclearance inspection must be identified with the packing shed where they were processed, as well as with the producing orchard, and this identity must be maintained until the apples or pears arrive in the United States.

(6) Facilities for the preclearance inspections prescribed in paragraph (d) of this section must be provided in the exporting country at a site acceptable to APHIS.

(7) Any apples or pears rejected for shipment into the United States may not, under any circumstance, be presented again for shipment to the United States.

(d) *Preclearance inspection.* Preclearance inspection will be conducted in the exporting country by an inspector. Preclearance inspection will be conducted for a minimum of 6,000 cartons of apples or pears, which may represent multiple grower lots from different packing sheds. The cartons examined during any given preclearance inspection will be known as an inspection unit. Apples or pears in any inspection unit may be shipped to the United States only if the inspection unit passes inspection as follows:

(1) Inspectors will examine, fruit by fruit, a biometrically designed statistical sample of 300 cartons drawn from each inspection unit.

(i) If inspectors find any live larva or pupa of *Leucoptera malifoliella*, they will reject the entire inspection unit for shipment to the United States. The inspectors also will reject for shipment any additional fruit from the producing orchard for the remainder of the shipping season. However, other orchards represented in the rejected inspection unit will not be affected for the remainder of the shipping season because of that rejection. Additionally, if inspectors reject any three inspection units in a single shipping season because of *Leucoptera malifoliella* on fruit processed by a single packing shed, no additional fruit from that packing shed will be accepted for shipment to the United States for the remainder of that shipping season.

(ii) If the inspectors find evidence of any other plant pest referred to in paragraph (g) of this section, and a treatment authorized in part 305 of this chapter is available, fruit in the inspection unit will remain eligible for shipment to the United States if the entire inspection unit is treated for the pest under the supervision of an inspector. However, if the entire inspectional unit is not treated in this manner, or if a plant pest is found for which no treatment authorized in part 305 of this chapter is available, the inspectors will reject the entire inspection unit for shipment to the United States. Rejection of an inspection unit because of pests other than *Leucoptera malifoliella* will not be cause for rejecting additional fruit from an orchard or packing shed.

(iii) Apples and pears precleared for shipment to the United States as prescribed in this paragraph will not be inspected again in the United States (except as necessary to ensure that the fruit has been precleared) unless the preclearance program with the exporting country is terminated in accordance with paragraph (e) of this section. If the preclearance program is terminated with any country, precleared fruit in transit to the United States at the

time of termination will be spot-checked by inspectors upon arrival in the United States for evidence of plant pests referred to in paragraph (g) of this section. If any live larva or pupa of *Leucoptera malifoliella* is found in any carton of fruit, inspectors will reject that carton and all other cartons in that consignment that are from the same producing orchard. In addition, the remaining cartons of fruit in that consignment will be reinspected as an inspection unit in accordance with the preclearance procedures prescribed in paragraph (d) of this section.

(2) [Reserved]

(e) *Termination of preclearance programs.* The Administrator may terminate the preclearance program in a country if he or she determines that any of the conditions specified in paragraph (c) of this section are not met or because of pests found during preclearance inspections. Termination of the preclearance program will stop shipments of apples or pears from that country for the remainder of that shipping season. Termination of the preclearance program for findings of *Leucoptera malifoliella* in preclearance inspections in any country will be based on rates of rejection of inspection units as follows:

(1) Termination because of findings of *Leucoptera malifoliella.* The preclearance program will be terminated with a country when, in one shipping season, inspection units are rejected because of *Leucoptera malifoliella* as follows:

(i) Five inspection units in sequence among inspection units 1–20, or a total of 8 or more of the inspection units 1–20;

(ii) Five inspection units in sequence among inspection units 21–40, or a total of 10 or more of the inspection units 1–40;

(iii) Five inspection units in sequence among inspection units 41–60, or a total of 12 or more of the inspection units 1–60;

(iv) Five inspection units in sequence among inspection units 61–80, or a total of 14 or more of the inspection units 1–80;

(v) Five inspection units in sequence among inspection units 81–100, or a total of 16 or more of the inspection units 1–100;

(vi) Five inspection units in sequence among inspection units 101–120, or a total of 18 or more of the inspection units 1–120.

(vii) Sequence can be continued in increments of 20 inspection units by increasing the number of rejected inspection units by 2.

(2) Termination because of findings of other plant pests. The preclearance program will be terminated with a country when, in one shipping season, inspection units are rejected because of other insect pests as follows:

(i) Ten or more of the inspection units 1–20;

(ii) Fifteen or more of the inspection units 1–40;

(iii) Twenty or more of the inspection units 1–60;

(iv) Twenty-five or more of the inspection units 1–80;

(v) Thirty or more of the inspection units 1–100; or

(vi) Thirty-five or more of the inspection units 1–120.

(vii) Sequence can be continued in increments of 20 inspection units by increasing the number of rejected inspection units by 5.

(f) *Cold treatment.* In addition to all other requirements of this section, apples or pears may be imported into the United States from France, Italy, Portugal, or Spain only if the fruit is cold treated for the Mediterranean fruit fly in accordance with part 305 of this chapter.

(g) *Plant pests; authorized treatments.* (1) Apples from Belgium, Denmark, France, Great Britain, Italy, the Netherlands, Northern Ireland, Norway, Portugal, the Republic of Ireland, Spain, Sweden, Switzerland, and Germany; and pears from Belgium, France, Great Britain, Italy, the Netherlands, Portugal, and Spain may be imported into the United States only if they are found free of the following pests or, if an authorized treatment is available, they are treated for: The pear leaf blister moth (*Leucoptera malifoliella* (O.G. Costa) (Lyonetiidae)), the plum fruit moth (*Cydia funebrana* (Treitschke) (Tortricidae)), the summer fruit tortrix moth (*Adoxophyes orana* (Fischer von Rosslertamm) (Tortricidae)), a leaf roller (*Argyrotaenia pulchellana* (Haworth) (Tortricidae)), and other insect pests that do not exist in the United States or that are not widespread in the United States.

(2) Authorized treatments are listed in part 305 of this chapter.

(h) *Inspection in the United States.* Notwithstanding provisions to the contrary in paragraphs (c) and (d) of this section, the Administrator may allow apples or pears imported under this section to be inspected at a port of arrival in the United States, in lieu of a preclearance inspection, under the following conditions:

(1) The Administrator has determined that inspection can be accomplished at the port of arrival without increasing the risk of introducing insect pests into the United States;

(2) Each pallet of apples or pears must be completely enclosed in plastic, to prevent the escape of insects, before it is offloaded at the port of arrival;

(3) The entire consignment of apples or pears must be offloaded and moved to an enclosed warehouse, where adequate inspection facilities are available, under the supervision of an inspector.

(4) The Administrator must determine that a sufficient number of inspectors are available at the port of arrival to perform the services required.

(5) The method of inspection will be the same as prescribed in paragraph (d) of this section for preclearance inspections.

§ 319.56–23 Apricots, nectarines, peaches, plumcot, and plums from Chile.

(a) *Importations allowed.* Apricots, nectarines, peaches, plumcot, and plums may be imported into the United States from Chile in accordance with this section and other applicable provisions of this subpart.[3]

(b) *Trust fund agreement.* Apricots, nectarines, peaches, plumcot, and plums may be imported under the regulations in this section only if the plant protection service of Chile (Servicio Agricola y Ganadero, referred to in this section as SAG), has entered into a trust fund agreement with APHIS in accordance with § 319.56–6.

(c) *Responsibilities of Servicio Agricola y Ganadero.* SAG will ensure that:

(1) Apricots, nectarines, peaches, plumcot, or plums are presented to inspectors for preclearance in their shipping containers at the shipping site as prescribed in paragraph (d) of this section.

(2) Apricots, nectarines, peaches, plumcot, and plums presented for inspection are identified in shipping documents accompanying each load of fruit that identify the packing shed where they were processed and the orchards where they were produced; and this identity is maintained until the apricots, nectarines, peaches, plumcot, or plums are released for entry into the United States.

(3) Facilities for the inspections prescribed in paragraph (d) of this section are provided in Chile at an inspection site acceptable to APHIS.

(d) *Preclearance inspection.* Preclearance inspection will be

[3] As provided in § 319.56–4, apricots, nectarines, peaches, plumcot, and plums Chile may also be imported if treated in accordance with a treatment listed in part 305 of this chapter and subject to other applicable regulations in this subpart.

conducted in Chile under the direction of inspectors. An inspection unit will consist of a lot or consignment from which a statistical sample is drawn and examined. An inspection unit may represent multiple grower lots from different packing sheds. Apricots, nectarines, peaches, plumcot, or plums in any inspection unit may be shipped to the United Sates only if the inspection unit passes inspection as follows:

(1) Inspectors will examine the contents of the cartons based on a biometric sampling scheme established for each inspection unit.

(i) If the inspectors find evidence of any plant pest for which a treatment authorized in part 305 of this chapter is available, fruit in the inspection unit will remain eligible for shipment to the United States if the entire inspection unit is treated for the pest in Chile. However, if the entire inspection unit is not treated in this manner, or if a plant pest is found for which no treatment authorized in part 305 of this chapter is available, the entire inspection unit will not be eligible for shipment to the United States.

(ii) Apricots, nectarines, peaches, plumcot, and plums precleared for shipment to the United States as prescribed in this paragraph will not be inspected again in the United States except as necessary to ensure that the fruit has been precleared and for occasional monitoring purposes.

(2) [Reserved]

(e) *Termination of preclearance programs.* Consignments of apricots, nectarines, peaches, plumcot, and plums will be individually evaluated regarding the rates of infestation of inspection units of these articles presented for preclearance. The inspection program for an article will be terminated when inspections determine that the rate of infestation of inspection units of the article by pests listed in paragraph (f) of this section exceeds 20 percent calculated on any consecutive 14 days of actual inspections (not counting days on which inspections are not conducted). Termination of the inspection program for an article will require mandatory treatment in Chile, prior to shipment to the United States, of consignments of the article for the remainder of that shipping season. If a preclearance inspection program is terminated with Chile, precleared fruit in transit to the United States at the time of termination will be spot-checked by inspectors upon arrival in the United States for evidence of plant pests referred to in paragraph (f) of this section.

(f) *Plant pests; authorized treatments.*

(1) Apricots, nectarines, peaches, plumcot, or plums from Chile may be imported into the United States only if they are found free of the following pests or, if an authorized treatment is available, they are treated for: *Proeulia* spp., *Leptoglossus chilensis*, *Megalometis chilensis*, *Naupactus xanthographus*, *Listroderes subcinctus*, and *Conoderus rufangulus*, and other insect pests that the Administrator has determined do not exist, or are not widespread, in the United States.

(2) Authorized treatments are listed in part 305 of this chapter.

(g) *Inspection in the United States.* Notwithstanding provisions to the contrary in paragraphs (c) and (d) of this section, the Administrator may, in emergency or extraordinary situations, allow apricots, nectarines, peaches, plumcot, or plums imported under this section to be inspected at a port of arrival in the United States, in lieu of a preclearance inspection or fumigation in Chile, under the following conditions:

(1) The Administrator is satisfied that a unique situation exists which justifies a limited exception to mandatory preclearance;

(2) The Administrator has determined that inspection and/or treatment can be accomplished at the intended port of arrival without increasing the risk of introducing quarantine pests into the United States;

(3) The entire consignment of apricots, nectarines, peaches, plumcot, or plums must be offloaded and moved to an enclosed warehouse, where inspection and treatment facilities are available.

(4) The Administrator must determine that a sufficient number of inspectors are available at the port of arrival to perform the services required.

(5) The method of sampling and inspection will be the same as prescribed in paragraph (d) of this section for preclearance inspections.

§ 319.56–24 Lettuce and peppers from Israel.

(a) Lettuce may be imported into the United States from Israel without fumigation for leafminers, thrips, and *Sminthuris viridis* only in accordance with this section and other applicable provisions of this subpart.

(1) *Growing conditions.* (i) The lettuce must be grown in insect-proof houses covered with 50 mesh screens, double self-closing doors, and hard walks (no soil) between the beds;

(ii) The lettuce must be grown in growing media that has been sterilized by steam or chemical means;

(iii) The lettuce must be inspected during its active growth phase and the inspection must be monitored by a representative of the Israeli Ministry of Agriculture;

(iv) The crop must be protected with sticky traps and prophylactic sprays approved for the crop by Israel;

(v) The lettuce must be moved to an insect-proof packing house at night in plastic containers covered by 50 mesh screens;

(vi) The lettuce must be packed in an insect-proof packing house, individually packed in transparent plastic bags, packed in cartons, placed on pallets, and then covered with shrink wrapping; and

(vii) The lettuce must be transported to the airport in a closed refrigerated truck for shipment to the United States.

(2) Each consignment of lettuce must be accompanied by a phytosanitary certificate issued by the Israeli Ministry of Agriculture stating that the conditions of paragraph (a)(1) of this section have been met.

(b) Peppers (fruit) (*Capsicum* spp.) from Israel may be imported into the United States only under the following conditions:

(1) The peppers have been grown in the Arava Valley by growers registered with the Israeli Department of Plant Protection and Inspection (DPPI).

(2) Malathion bait sprays shall be applied in the residential areas of the Arava Valley at 6- to 10-day intervals beginning not less than 30 days before the harvest of backyard host material in residential areas and shall continue through harvest.

(3) The peppers have been grown in insect-proof plastic screenhouses approved by the DPPI and APHIS. Houses shall be examined periodically by DPPI or APHIS personnel for tears in either plastic or screening.

(4) Trapping for Mediterranean fruit fly (Medfly) shall be conducted by DPPI throughout the year in the agricultural region along Arava Highway 90 and in the residential area of Paran. The capture of a single Medfly in a screenhouse will immediately cancel export from that house until the source of the infestation is delimited, trap density is increased, pesticide sprays are applied, or other measures acceptable to APHIS are taken to prevent further occurrences.

(5) Signs in English and Hebrew shall be posted along Arava Highway 90 stating that it is prohibited to throw out/discard fruits and vegetables from passing vehicles.

(6) Sorting and packing of peppers shall be done in the insect-proof screenhouses in the Arava Valley.

(7) Prior to movement from approved insect-proof screenhouses in the Arava

Valley, the peppers must be packed in either individual insect-proof cartons or in non-insect-proof cartons that are covered by insect-proof mesh or plastic tarpaulins; covered non-insect-proof cartons must be placed in shipping containers.

(8) The packaging safeguards required by paragraph (b)(7) of this section must remain intact at all times during the movement of the peppers to the United States and must be intact upon arrival of the peppers in the United States.

(9) Each consignment of peppers must be accompanied by a phytosanitary certificate issued by the Israeli national plant protection organization stating that the conditions of paragraphs (b)(1) though (b)(7) of this section have been met.

§ 319.56–25 Papayas from Central America and Brazil.

The Solo type of papaya may be imported into the continental United States, Alaska, Puerto Rico, and the U.S. Virgin Islands only in accordance with this section and other applicable provisions of this subpart.

(a) The papayas were grown and packed for shipment to the United States in one of the following locations:

(1) *Brazil:* State of Espirito Santo; all areas in the State of Bahia that are between the Jequitinhonha River and the border with the State of Espirito Santo and all areas in the State of Rio Grande del Norte that contain the following municipalities: Touros, Pureza, Rio do Fogo, Barra de Maxaranguape, Taipu, Ceara Mirim, Extremoz, Ielmon Marinho, Sao Goncalo do Amarante, Natal, Maciaba, Parnamirim, Veracruz, Sao Jose de Mipibu, Nizia Floresta, Monte Aletre, Areas, Senador Georgino Avelino, Espirito Santo, Goianinha, Tibau do Sul, Vila Flor, and Canguaretama e Baia Formosa.

(2) *Costa Rica:* Provinces of Guanacaste, Puntarenas, San Jose.

(3) *El Salvador:* Departments of La Libertad, La Paz, and San Vicente.

(4) *Guatemala:* Departments of Escuintla, Retalhuleu, Santa Rosa, and Suchitepéquez.

(5) *Honduras:* Departments of Comayagua, Cortés, and Santa Bárbara.

(6) *Nicaragua:* Departments of Carazo, Granada, Leon, Managua, Masaya, and Rivas.

(7) *Panama:* Provinces of Cocle, Herrera, and Los Santos; Districts of Aleanje, David, and Dolega in the Province of Chiriqui; and all areas in the Province of Panama that are west of the Panama Canal.

(b) Beginning at least 30 days before harvest began and continuing through the completion of harvest, all trees in the field where the papayas were grown were kept free of papayas that were one-half or more ripe (more than one-fourth of the shell surface yellow), and all culled and fallen fruits were buried, destroyed, or removed from the farm at least twice a week.

(c) The papayas were held for 20 minutes in hot water at 48 °C (118.4 °F).

(d) When packed, the papayas were less than one-half ripe (the shell surface was no more than one-fourth yellow, surrounded by light green), and appeared to be free of all injurious insect pests.

(e) The papayas were safeguarded from exposure to fruit flies from harvest to export, including being packaged so as to prevent access by fruit flies and other injurious insect pests. The package containing the papayas does not contain any other fruit, including papayas not qualified for importation into the United States.

(f) All cartons in which papayas are packed must be stamped ''Not for importation into or distribution in HI.''

(g) All activities described in paragraphs (a) through (f) of this section were carried out under the supervision and direction of plant health officials of the national Ministry of Agriculture.

(h) Beginning at least 1 year before harvest begins and continuing through the completion of harvest, fruit fly traps were maintained in the field where the papayas were grown. The traps were placed at a rate of 1 trap per hectare and were checked for fruit flies at least once weekly by plant health officials of the national Ministry of Agriculture. Fifty percent of the traps were of the McPhail type, and 50 percent of the traps were of the Jackson type. If the average Jackson trap catch was greater than seven Medflies per trap per week, measures were taken to control the Medfly population in the production area. The national Ministry of Agriculture kept records of fruit fly finds for each trap, updated the records each time the traps were checked, and made the records available to APHIS inspectors upon request. The records were maintained for at least 1 year.

(i) If the average Jackson trap catch exceeds 14 Medflies per trap per week, importations of papayas from that production area must be halted until the rate of capture drops to an average of 7 or fewer Medflies per trap per week.

(j) In the State of Espirito Santo, Brazil, if the average McPhail trap catch was greater than seven South American fruit flies (*Anastrepha fraterculus*) per trap per week, measures were taken to control the South American fruit fly population in the production area. If the average McPhail trap catch exceeds 14 South American fruit flies per trap per week, importations of papayas from that production area must be halted until the rate of capture drops to an average of 7 or fewer South American fruit flies per trap per week.

(k) All consignments must be accompanied by a phytosanitary certificate issued by the national Ministry of Agriculture stating that the papayas were grown, packed, and shipped in accordance with the provisions of this section.

§ 319.56–26 Melon and watermelon from certain countries in South America.

(a) *Cantaloupe and watermelon from Ecuador.* Cantaloupe (*Cucumis melo*) and watermelon (fruit) (*Citrullus lanatus*) may be imported into the United States from Ecuador only in accordance with this paragraph and all other applicable requirements of this subpart:

(1) The cantaloupe or watermelon may be imported in commercial consignments only.

(2) The cantaloupe or watermelon must have been grown in an area where trapping for the South American cucurbit fly (*Anastrepha grandis*) has been conducted for at least the previous 12 months by the national plant protection organization (NPPO) of Ecuador, under the direction of APHIS, with no findings of the pest.[4]

(3) The following area meets the requirements of paragraph (a)(2) of this section: The area within 5 kilometers of either side of the following roads:

(i) Beginning in Guayaquil, the road north through Nobol, Palestina, and Balzar to Velasco-Ibarra (Empalme);

(ii) Beginning in Guayaquil, the road south through E1 26, Puerto Inca, Naranjal, and Camilo Ponce to Enriquez;

(iii) Beginning in Guayaquil, the road east through Palestina to Vinces;

(iv) Beginning in Guayaquil, the road west through Piedrahita (Novol) to Pedro Carbo; or

(v) Beginning in Guayaquil, the road west through Progreso, Engunga, Tugaduaja, and Zapotal to El Azucar.

(4) The cantaloupe or watermelon may not be moved into Alabama, American Samoa, Arizona, California, Florida, Georgia, Guam, Hawaii, Louisiana, Mississippi, New Mexico, Puerto Rico, South Carolina, Texas, and the U.S. Virgin Islands. The boxes in which the cantaloupe or watermelon is packed must be stamped with the name

[4] Information on the trapping program may be obtained by writing to the Animal and Plant Health Inspection Service, International Services, Stop 3432, 1400 Independence Avenue, SW., Washington, DC 20250–3432.

of the commodity followed by the words ''Not to be distributed in the following States or territories: AL, AS, AZ, CA, FL, GA, GU, HI, LA, MS, NM, PR, SC, TX, VI''.

(b) *Cantaloupe, netted melon, vegetable melon, winter melon, and watermelon from Peru.* Cantaloupe, netted melon, vegetable melon, and winter melon (*Cucumis melo* L. subsp. *melo*); and watermelon may be imported into the United States from Peru only in accordance with this paragraph and all other applicable requirements of this subpart:

(1) The fruit may be imported in commercial consignments only.

(2) The fruit must have been grown in an area of Peru considered by APHIS to be free of the South American cucurbit fly, must be accompanied by a phytosanitary certificate declaring its origin in such an area, and must be safeguarded and labeled, each in accordance with § 319.56–5 of this subpart.

(3) The phytosanitary certificate required under § 319.56–5 must also include a declaration by the NPPO of Peru indicating that, upon inspection, the fruit was found free of the gray pineapple mealybug (*Dysmicoccus neobrevipes*).

(4) All shipments of fruit must be labeled in accordance with § 319.56–5(e) of this subpart, and the boxes in which the fruit is packed must be labeled ''Not for distribution in HI, PR, VI, or Guam.''

§ 319.56–27 Fuji variety apples from Japan and the Republic of Korea.

Fuji variety apples may be imported into the United States from Japan and the Republic of Korea only in accordance with this section and other applicable provisions of this subpart.

(a) *Treatment and fumigation.* The apples must be cold treated and then fumigated, under the supervision of an APHIS inspector, either in Japan or the Republic of Korea, for the peach fruit moth (*Carposina niponensis*), the yellow peach moth (*Conogethes punctiferalis*), and the fruit tree spider mite (Tetranychus viennensis), in accordance with part 305 of this chapter.

(b) *APHIS inspection.* The apples must be inspected upon completion of the treatments required by paragraph (a) of this section, prior to export from Japan or the Republic of Korea, by an APHIS inspector and an inspector from the national plant protection agency of Japan or the Republic of Korea. The apples shall be subject to further disinfection in the exporting country if plant pests are found prior to export. Imported Fuji variety apples inspected in Japan or the Republic of Korea are also subject to inspection and disinfection at the port of first arrival, as provided in § 319.56–3.

(c) *Trust fund agreements.* The national plant protection agency of the exporting country must enter into a trust fund agreement with APHIS in accordance with § 319.56–6 before APHIS will provide the services necessary for Fuji variety apples to be imported into the United States from Japan or the Republic of Korea.

§ 319.56–28 Tomatoes from certain countries.

(a) *Tomatoes (fruit) (Lycopersicon esculentum) from Spain.* Pink or red tomatoes may be imported into the United States from Spain only in accordance with this section and other applicable provisions of this subpart.[5]

(1) The tomatoes must be grown in the Almeria Province, the Murcia Province, or the municipalities of Albuñol and Carchuna in the Granada Province of Spain in greenhouses registered with, and inspected by, the Spanish Ministry of Agriculture, Fisheries, and Food (MAFF);

(2) The tomatoes may be shipped only from December 1 through April 30, inclusive;

(3) Two months prior to shipping, and continuing through April 30, MAFF must set and maintain Mediterranean fruit fly (Medfly) traps baited with trimedlure inside the greenhouses at a rate of four traps per hectare. In all areas outside the greenhouses and within 8 kilometers, including urban and residential areas, MAFF must place Medfly traps at a rate of four traps per square kilometer. All traps must be checked every 7 days;

(4) Capture of a single Medfly in a registered greenhouse will immediately result in cancellation of exports from that greenhouse until the source of infestation is determined, the Medfly infestation is eradicated, and measures are taken to preclude any future infestation. Capture of a single Medfly within 2 kilometers of a registered greenhouse will necessitate increasing trap density in order to determine whether there is a reproducing population in the area. Capture of two Medflies within 2 kilometers of a registered greenhouse and within a 1-month time period will result in cancellation of exports from all registered greenhouses within 2 kilometers of the find until the source of infestation is determined and the Medfly infestation is eradicated;

(5) MAFF must maintain records of trap placement, checking of traps, and any Medfly captures, and must make the records available to APHIS upon request;

(6) The tomatoes must be packed within 24 hours of harvest. They must be safeguarded from harvest to export by insect-proof mesh screens or plastic tarpaulins, including while in transit to the packing house and while awaiting packaging. They must be packed in insect-proof cartons or containers, or covered by insect-proof mesh or plastic tarpaulins for transit to the airport and subsequent export to the United States. These safeguards must be intact upon arrival in the United States; and

(7) MAFF is responsible for export certification inspection and issuance of phytosanitary certificates. Each consignment of tomatoes must be accompanied by a phytosanitary certificate issued by MAFF and bearing the declaration, ''These tomatoes were grown in registered greenhouses in Almeria Province, the Murcia Province, or the municipalities of Albuñol and Carchuna in the Granada Province in Spain.''

(b) *Tomatoes (fruit) (Lycopersicon esculentum) from France.* Pink or red tomatoes may be imported into the United States from France only in accordance with this section and other applicable provisions of this subpart.[6]

(1) The tomatoes must be grown in the Brittany Region of France in greenhouses registered with, and inspected by, the Service de la Protection Vegetaux (SRPV);

(2) From June 1 through September 30, SRPV must set and maintain one Medfly trap baited with trimedlure inside and one outside each greenhouse and must check the traps every 7 days;

(3) Capture of a single Medfly inside or outside a registered greenhouse will immediately result in cancellation of exports from that greenhouse until the source of the infestation is determined, the Medfly infestation is eradicated, and measures are taken to preclude any future infestation;

(4) SRPV must maintain records of trap placement, checking of traps, and any Medfly captures, and must make them available to APHIS upon request;

(5) From June 1 through September 30, the tomatoes must be packed within 24 hours of harvest. They must be safeguarded by insect-proof mesh screen

[5] The surface area of a pink tomato is more than 30 percent but not more than 60 percent pink and/or red. The surface area of a red tomato is more than 60 percent pink and/or red. Green tomatoes from Spain, France, Morocco, and Western Sahara may be imported in accordance with §§ 319.56–3 and 319.56–4.

[6] See footnote 5 to paragraph (a) of this section.

or plastic tarpaulin while in transit to the packing house and while awaiting packing. They must be packed in insect-proof cartons or containers, or covered by insect-proof mesh screen or plastic tarpaulin. These safeguards must be intact upon arrival in the United States; and

(6) SRPV is responsible for export certification inspection and issuance of phytosanitary certificates. Each consignment of tomatoes must be accompanied by a phytosanitary certificate issued by SRPV and bearing the declaration, ''These tomatoes were grown in registered greenhouses in the Brittany Region of France.''

(c) *Tomatoes (fruit) (Lycopersicon esculentum) from Morocco and Western Sahara.* Pink tomatoes may be imported into the United States from Morocco and Western Sahara only in accordance with this section and other applicable provisions of this subpart.[7]

(1) The tomatoes must be grown in the provinces of El Jadida or Safi in Morocco or in the province of Dahkla in Western Sahara in insect-proof greenhouses registered with, and inspected by, the Moroccan Ministry of Agriculture, Division of Plant Protection, Inspection, and Enforcement (DPVCTRF);

(2) The tomatoes may be shipped from Morocco and Western Sahara only between December 1 and April 30, inclusive;

(3) Beginning 2 months prior to the start of the shipping season and continuing through the end of the shipping season, DPVCTRF must set and maintain Mediterranean fruit fly (Medfly) traps baited with trimedlure inside the greenhouses at a rate of four traps per hectare. In Morocco, traps must also be placed outside registered greenhouses within a 2-kilometer radius at a rate of four traps per square kilometer. In Western Sahara, a single trap must be placed outside in the immediate proximity of each registered greenhouse. All traps in Morocco and Western Sahara must be checked every 7 days;

(4) DPVCTRF must maintain records of trap placement, checking of traps, and any Medfly captures, and make the records available to APHIS upon request;

(5) Capture of a single Medfly in a registered greenhouse will immediately result in cancellation of exports from that greenhouse until the source of the infestation is determined, the Medfly infestation has been eradicated, and measures are taken to preclude any future infestation. Capture of a single Medfly within 200 meters of a registered greenhouse will necessitate increasing trap density in order to determine whether there is a reproducing population in the area. Six additional traps must be placed within a radius of 200 meters surrounding the trap where the Medfly was captured. Capture of two Medflies within 200 meters of a registered greenhouse and within a 1-month time period will necessitate Malathion bait sprays in the area every 7 to 10 days for 60 days to ensure eradication;

(6) The tomatoes must be packed within 24 hours of harvest and must be pink at the time of packing. They must be safeguarded by an insect-proof mesh screen or plastic tarpaulin while in transit to the packing house and while awaiting packing. They must be packed in insect-proof cartons or containers, or covered by insect-proof mesh or plastic tarpaulin for transit to the airport and export to the United States. These safeguards must be intact upon arrival in the United States; and

(7) The Moroccan Ministry of Agiculture, Fresh Product Export (EACCE) is responsible for export certification inspection and issuance of phytosanitary certificates. Each consignment of tomatoes must be accompanied by a phytosanitary certificate issued by EACCE and bearing the declaration, ''These tomatoes were grown in registered greenhouses in El Jadida or Safi Province, Morocco, and were pink at the time of packing'' or ''These tomatoes were grown in registered greenhouses in Dahkla Province, Western Sahara and were pink at the time of packing.''

(d) *Tomatoes (fruit) (Lycopersicon esculentum) from Chile.* Tomatoes from Chile, whether green or at any stage of ripeness, may be imported into the United States only in accordance with this section and other applicable provisions of this subpart.

(1) The tomatoes must be treated in Chile with methyl bromide in accordance with part 305 of this chapter. The treatment must be conducted in facilities registered with the Servicio Agricola y Ganadero (SAG) and with APHIS personnel monitoring the treatments;

(2) The tomatoes must be treated and packed within 24 hours of harvest. Once treated, the tomatoes must be safeguarded by an insect-proof mesh screen or plastic tarpaulin while in transit to the packing house and awaiting packing. They must be packed in insect-proof cartons or containers, or insect-proof mesh or plastic tarpaulin under APHIS monitoring for transit to the airport and subsequent export to the United States. These safeguards must be intact upon arrival in the United States; and

(3) Tomatoes may be imported into the United States from Chile only if SAG has entered into a trust fund agreement with APHIS for that shipping season in accordance with § 319.56–6. This agreement requires SAG to pay in advance all costs that APHIS estimates it will incur in providing the preclearance services prescribed in this section for that shipping season.

(e) *Tomatoes (fruit) (Lycopersicon esculentum) from Australia.* Tomatoes may be imported into the United States from Australia only in accordance with this section and other applicable provisions of this subpart.

(1) The tomatoes must be grown in greenhouses registered with, and inspected by, the Australian Quarantine Inspection Service (AQIS);

(2) Two months prior to shipping, AQIS must inspect the greenhouse to establish its freedom from the following quarantine pests: *Bactrocera aquilonis, B. cucumis, B. jarvis, B. neohumeralis, B. tryoni, Ceratitis capitata, Chrysodeixis argentifera, C. erisoma, Helicoverpa armigera, H. punctigera, Lamprolonchaea brouniana, Sceliodes cordalis,* and *Spodoptera litura.* AQIS must also set and maintain fruit fly traps inside the greenhouses and around the perimeter of the greenhouses. Inside the greenhouses, the traps must be APHIS-approved fruit fly traps, and they must be set at the rate of six per hectare. In all areas outside the greenhouse and within 8 kilometers of the greenhouse, fruit fly traps must be placed on a 1-kilometer grid. All traps must be checked at least every 7 days;

(3) Within a registered greenhouse, capture of a single fruit fly or other quarantine pest will result in immediate cancellation of exports from that greenhouse until the source of the infestation is determined, the infestation has been eradicated, and measures are taken to preclude any future infestation;

(4) Outside of a registered greenhouse, if one fruit fly of the species specified in paragraph (e)(2) of this section is captured, the trap density and frequency of trap inspection must be increased to detect a reproducing colony. Capture of two Medflies or three of the same species of *Bactrocera* within 2 kilometers of each other and within 30 days will result in the cancellation of exports from all registered greenhouses within 2 kilometers of the finds until the source of the infestation is determined and the fruit fly infestation is eradicated;

(5) AQIS must maintain records of trap placement, checking of traps, and

[7] See footnote 5 to paragraph (a) of this section.

any fruit fly captures, and must make the records available to APHIS upon request;

(6) The tomatoes must be packed within 24 hours of harvest. They must be safeguarded by an insect-proof mesh screen or plastic tarpaulin while in transit to the packing house or while awaiting packing. They must be placed in insect-proof cartons or containers, or securely covered with insect-proof mesh or plastic tarpaulin for transport to the airport or other shipping point. These safeguards must be intact upon arrival in the United States; and

(7) Each consignment of tomatoes must be accompanied by a phytosanitary certificate issued by AQIS stating ''These tomatoes were grown, packed, and shipped in accordance with the requirements of § 319.56–28(e) of 7 CFR.''

§ 319.56–29 Ya variety pears from China.

Ya variety pears may be imported into the United States from China only in accordance with this section and other applicable provisions of this subpart.

(a) *Growing and harvest conditions.* (1) The pears must have been grown by growers registered with the Chinese Ministry of Agriculture in an APHIS-approved export growing area in the Hebei or Shandong Provinces.

(2) Field inspections for signs of pest infestation must be conducted by the Chinese Ministry of Agriculture during the growing season.

(3) The registered growers shall be responsible for following the phytosanitary measures agreed upon by APHIS and the Chinese Ministry of Agriculture, including applying pesticides to reduce the pest population and bagging the pears on the trees to reduce the opportunity for pests to attack the fruit during the growing season. The bags must remain on the pears through the harvest and during their movement to the packing house.

(4) The packing houses in which the pears are prepared for exportation shall not be used for any fruit other than Ya variety pears from registered growers during the pear export season. The packing houses shall accept only those pears that are in intact bags as required by paragraph (a)(3) of this section. The pears must be loaded into containers at the packing house and the containers then sealed before movement to the port of export.

(b) *Treatment.* Pears from Shandong Province must be cold treated for *Bactrocera dorsalis* in accordance with part 305 of this chapter.

(c) Each consignment of pears must be accompanied by a phytosanitary certificate issued by the Chinese Ministry of Agriculture stating that the conditions of this section have been met.

§ 319.56–30 Hass avocados from Michoacan, Mexico.

Fresh Hass variety avocados (*Persea americana*) may be imported from Michoacan, Mexico, into the United States in accordance with the requirements of § 319.56–3 of this subpart, and only under the following conditions:

(a) *Shipping restrictions.* (1) The avocados may be imported in commercial consignments only;

(2) Between January 31, 2005 and January 31, 2007, the avocados may be imported into and distributed in all States except California, Florida, Hawaii, Puerto Rico, and U.S. Territories. After January 31, 2007, the avocados may be imported into and distributed in all States, but not Puerto Rico or any U.S. Territory.

(b) *Trust fund agreement.* The avocados may be imported only if the Mexican avocado industry association representing Mexican avocado growers, packers, and exporters has entered into a trust fund agreement with APHIS for that shipping season in accordance with § 319.56–6.

(c) *Safeguards in Mexico.* The avocados must have been grown in the Mexican State of Michoacan in an orchard located in a municipality that meets the requirements of paragraph (c)(1) of this section. The orchard in which the avocados are grown must meet the requirements of paragraph (c)(2) of this section. The avocados must be packed for export to the United States in a packinghouse that meets the requirements of paragraph (c)(3) of this section. The Mexican national plant protection organization (NPPO) must provide an annual work plan to APHIS that details the activities that the Mexican NPPO will, subject to APHIS' approval of the work plan, carry out to meet the requirements of this section; APHIS will be directly involved with the Mexican NPPO in the monitoring and supervision of those activities. The personnel conducting the trapping and pest surveys must be hired, trained, and supervised by the Mexican NPPO or by the Michoacan State delegate of the Mexican NPPO.

(1) *Municipality requirements.* (i) The municipality must be listed as an approved municipality in the bilateral work plan provided to APHIS by the Mexican NPPO.

(ii) The municipality must be surveyed at least semiannually (once during the wet season and once during the dry season) and found to be free from the large avocado seed weevil *Heilipus lauri*, the avocado seed moth *Stenoma catenifer*, and the small avocado seed weevils *Conotrachelus aguacatae* and *C. perseae.*

(iii) Trapping must be conducted in the municipality for Mediterranean fruit fly (Medfly) (*Ceratitis capitata*) at the rate of 1 trap per 1 to 4 square miles. Any findings of Medfly must be reported to APHIS.

(2) *Orchard and grower requirements.* The orchard and the grower must be registered with the Mexican NPPO's avocado export program and must be listed as an approved orchard or an approved grower in the annual work plan provided to APHIS by the Mexican NPPO. The operations of the orchard must meet the following conditions:

(i) The orchard and all contiguous orchards and properties must be surveyed semiannually and found to be free from the avocado stem weevil *Copturus aguacatae.*

(ii) Trapping must be conducted in the orchard for the fruit flies *Anastrepha ludens*, *A. serpentina*, and *A. striata* at the rate of one trap per 10 hectares. If one of those fruit flies is trapped, at least 10 additional traps must be deployed in a 50-hectare area immediately surrounding the trap in which the fruit fly was found. If within 30 days of the first finding any additional fruit flies are trapped within the 260-hectare area surrounding the first finding, malathion bait treatments must be applied in the affected orchard in order for the orchard to remain eligible to export avocados.

(iii) Avocado fruit that has fallen from the trees must be removed from the orchard at least once every 7 days and may not be included in field boxes of fruit to be packed for export.

(iv) Dead branches on avocado trees in the orchard must be pruned and removed from the orchard.

(v) Harvested avocados must be placed in field boxes or containers of field boxes that are marked to show the official registration number of the orchard. The avocados must be moved from the orchard to the packinghouse within 3 hours of harvest or they must be protected from fruit fly infestation until moved.

(vi) The avocados must be protected from fruit fly infestation during their movement from the orchard to the packinghouse and must be accompanied by a field record indicating that the avocados originated from a certified orchard.

(3) *Packinghouse requirements.* The packinghouse must be registered with the Mexican NPPO's avocado export program and must be listed as an

approved packinghouse in the annual work plan provided to APHIS by the Mexican NPPO. The operations of the packinghouse must meet the following conditions:

(i) During the time the packinghouse is used to prepare avocados for export to the United States, the packinghouse may accept fruit only from orchards certified by the Mexican NPPO for participation in the avocado export program.

(ii) All openings to the outside must be covered by screening with openings of not more than 1.6 mm or by some other barrier that prevents insects from entering the packinghouse.

(iii) The packinghouse must have double doors at the entrance to the facility and at the interior entrance to the area where the avocados are packed.

(iv) Prior to the culling process, a biometric sample, at a rate determined by APHIS, of avocados per consignment must be selected, cut, and inspected by the Mexican NPPO and found free from pests.

(v) The identity of the avocados must be maintained from field boxes or containers to the shipping boxes so the avocados can be traced back to the orchard in which they were grown if pests are found at the packinghouse or the port of first arrival in the United States.

(vi) Prior to being packed in boxes, each avocado fruit must be cleaned of all stems, leaves, and other portions of plants and labeled with a sticker that bears the official registration number of the packinghouse.

(vii) The avocados must be packed in clean, new boxes, or clean plastic reusable crates. The boxes or crates must be clearly marked with the identity of the grower, packinghouse, and exporter. Between January 31, 2005 and January 31, 2007, the boxes or crates must be clearly marked with the statement ''Not for importation or distribution in CA, FL, HI, Puerto Rico or U.S. Territories.'' After January 31, 2007, the boxes or crates must be clearly marked with the statement ''Not for importation or distribution in Puerto Rico or U.S. Territories.''

(viii) The boxes must be placed in a refrigerated truck or refrigerated container and remain in that truck or container while in transit through Mexico to the port of first arrival in the United States. Prior to leaving the packinghouse, the truck or container must be secured by Sanidad Vegetal with a seal that will be broken when the truck or container is opened. Once sealed, the refrigerated truck or refrigerated container must remain unopened until it reaches the port of first arrival in the United States.

(ix) Any avocados that have not been packed or loaded into a refrigerated truck or refrigerated container by the end of the work day must be kept in the screened packing area.

(d) *Certification.* All consignments of avocados must be accompanied by a phytosanitary certificate issued by the Mexican NPPO with an additional declaration certifying that the conditions specified in this section have been met.

(e) *Pest detection.* (1) If any of the avocado seed pests *Heilipus lauri*, *Conotrachelus aguacatae*, *C. perseae*, or *Stenoma catenifer* are discovered in a municipality during the semiannual pest surveys, orchard surveys, packinghouse inspections, or other monitoring or inspection activity in the municipality, the Mexican NPPO must immediately initiate an investigation and take measures to isolate and eradicate the pests. The Mexican NPPO must also provide APHIS with information regarding the circumstances of the infestation and the pest risk mitigation measures taken. The municipality in which the pests are discovered will lose its pest-free certification and avocado exports from that municipality will be suspended until APHIS and the Mexican NPPO agree that the pest eradication measures taken have been effective and that the pest risk within that municipality has been eliminated.

(2) If the Mexican NPPO discovers the stem weevil *Copturus aguacatae* in an orchard during an orchard survey or other monitoring or inspection activity in the orchard, the Mexican NPPO must provide APHIS with information regarding the circumstances of the infestation and the pest risk mitigation measures taken. The orchard in which the pest was found will lose its export certification immediately and avocado exports from that orchard will be suspended until APHIS and the Mexican NPPO agree that the pest eradication measures taken have been effective and that the pest risk within that orchard has been eliminated.

(3) If the Mexican NPPO discovers the stem weevil *Copturus aguacatae* in fruit at a packinghouse, the Mexican NPPO must investigate the origin of the infested fruit and provide APHIS with information regarding the circumstances of the infestation and the pest risk mitigation measures taken. The orchard where the infested fruit originated will lose its export certification immediately and avocado exports from that orchard will be suspended until APHIS and the Mexican NPPO agree that the pest eradication measures taken have been effective and that the pest risk within that orchard has been eliminated.

(f) *Ports.* The avocados may enter the United States only through a port of entry located in a State where the distribution of the fruit is authorized pursuant to paragraph (a)(2) of this section.

(g) *Inspection.* The avocados are subject to inspection by an inspector at the port of first arrival. At the port of first arrival, an inspector will sample and cut avocados from each consignment to detect pest infestation.

(h) *Inspection.* The avocados are subject to inspection by an inspector at the port of first arrival, at any stops in the United States en route to an approved State, and upon arrival at the terminal market in the approved States. At the port of first arrival, an inspector will sample and cut avocados from each shipment to detect pest infestation.

(i) *Repackaging.* If any avocados are removed from their original shipping boxes and repackaged, the stickers required by paragraph (c)(3)(vi) of this section may not be removed or obscured and the new boxes must be clearly marked with all the information required by paragraph (c)(3)(vii) of this section.

§ 319.56–31 Peppers from Spain.

Peppers (fruit) (*Capsicum* spp.) may be imported into the United States from Spain only under permit, and only in accordance with this section and all other applicable requirements of this subpart:

(a) The peppers must be grown in the Alicante or Almeria Province of Spain in pest-proof greenhouses registered with, and inspected by, the Spanish Ministry of Agriculture, Fisheries, and Food (MAFF);

(b) The peppers may be shipped only from December 1 through April 30, inclusive;

(c) Beginning October 1, and continuing through April 30, MAFF must set and maintain Mediterranean fruit fly (*Ceratitis capitata*) (Medfly) traps baited with trimedlure inside the greenhouses at a rate of four traps per hectare. In all outside areas, including urban and residential areas, within 8 kilometers of the greenhouses, MAFF must set and maintain Medfly traps baited with trimedlure at a rate of four traps per square kilometer. All traps must be checked every 7 days;

(d) Capture of a single Medfly in a registered greenhouse will immediately halt exports from that greenhouse until the Administrator determines that the source of infestation has been identified, that all Medflies have been eradicated,

and that measures have been taken to preclude any future infestation. Capture of a single Medfly within 2 kilometers of a registered greenhouse will necessitate increased trap density in order to determine whether there is a reproducing population in the area. Capture of two Medflies within 2 kilometers of a registered greenhouse during a 1-month period will halt exports from all registered greenhouses within 2 kilometers of the capture, until the source of infestation is determined and all Medflies are eradicated;

(e) The peppers must be safeguarded from harvest to export by insect-proof mesh or plastic tarpaulin, including while in transit to the packing house and while awaiting packing. They must be packed in insect-proof cartons or covered by insect-proof mesh or plastic tarpaulin for transit to the airport and subsequent export to the United States. These safeguards must be intact upon arrival in the United States;

(f) The peppers must be packed for shipment within 24 hours of harvest;

(g) During shipment, the peppers may not transit other fruit fly-supporting areas unless shipping containers are sealed by MAFF with an official seal whose number is noted on the phytosanitary certificate; and

(h) A phytosanitary certificate issued by MAFF and bearing the declaration, ''These peppers were grown in registered greenhouses in Alicante or Almeria Province in Spain,'' must accompany the consignment.

§ 319.56–32 Peppers from New Zealand.

Peppers (fruit) (*Capsicum* spp.) from New Zealand may be imported into the United States only in accordance with this section and other applicable provisions of this subpart.

(a) The peppers must be grown in New Zealand in insect-proof greenhouses approved by the New Zealand Ministry of Agriculture and Forestry (MAF).

(b) The greenhouses must be equipped with double self-closing doors, and any vents or openings in the greenhouses (other than the double closing doors) must be covered with 0.6 mm screening in order to prevent the entry of pests into the greenhouse.

(c) The greenhouses must be examined periodically by MAF to ensure that the screens are intact.

(d) Each consignment of peppers must be accompanied by a phytosanitary certificate of inspection issued by MAF bearing the following declaration: ''These peppers were grown in greenhouses in accordance with the conditions in § 319.56–32.''

§ 319.56–33 Mangoes from the Philippines.

Mangoes (fruit) (*Mangifera indica*) may be imported into the United States from the Philippines only in accordance with this section and other applicable provisions of this subpart.

(a) *Limitation of origin.* The mangoes must have been grown on the island of Guimaras, which the Administrator has determined meets the criteria set forth in § 319.56–5 with regard to the mango seed weevil (*Sternochetus mangiferae*).

(b) *Treatment.* The mangoes must be treated for fruit flies of the genus *Bactrocera* with vapor heat under the supervision of an inspector in accordance with the regulations in part 305 of this chapter.

(c) *Inspection.* Mangoes from the Philippines are subject to inspection under the direction of an inspector, either in the Philippines or at the port of first arrival in the United States. Mangoes inspected in the Philippines are subject to reinspection at the port of first arrival in the United States as provided in § 319.56–3.

(d) *Labeling.* Each box of mangoes must be clearly labeled in accordance with § 319.56–5(c)(1).

(e) *Phytosanitary certificate.* Each consignment of mangoes must be accompanied by a phytosanitary certificate issued by the Republic of the Philippines Department of Agriculture that contains additional declarations stating that the mangoes were grown on the island of Guimaras and have been treated for fruit flies of the genus *Bactrocera* in accordance with paragraph (b) of this section.

(f) *Trust Fund Agreement.* Mangoes that are treated or inspected in the Philippines may be imported into the United States only if the Republic of the Philippines Department of Agriculture (RPDA) has entered into a trust fund agreement with APHIS in accordance with § 319.56–6.

§ 319.56–34 Clementines from Spain.

Clementines (*Citrus reticulata*) from Spain may only be imported into the United States in accordance with this section and other applicable provisions of this subpart.

(a) *Trust fund agreement.* Clementines from Spain may be imported only if the Government of Spain or its designated representative enters into a trust fund agreement with APHIS before each shipping season in accordance with § 319.56–6.

(b) *Grower registration and agreement.* Persons who produce clementines in Spain for export to the United States must:

(1) Be registered with the Government of Spain; and

(2) Enter into an agreement with the Government of Spain whereby the producer agrees to participate in and follow the Mediterranean fruit fly management program established by the Government of Spain.

(c) *Management program for Mediterranean fruit fly; monitoring.* The Government of Spain's Mediterranean fruit fly (*Ceratitis capitata*) management program must be approved by APHIS, and must contain the fruit fly trapping and recordkeeping requirements specified in this paragraph. The program must also provide that clementine producers must allow APHIS inspectors access to clementine production areas in order to monitor compliance with the Mediterranean fruit fly management program.

(1) *Trapping and control.* In areas where clementines are produced for export to the United States, traps must be placed in Mediterranean fruit fly host plants at least 6 weeks prior to harvest. Bait treatments using malathion, spinosad, or another pesticide that is approved by APHIS and the Government of Spain must be applied in the production areas at the rate specified by Spain's Medfly management program.

(2) *Records.* The Government of Spain or its designated representative must keep records that document the fruit fly trapping and control activities in areas that produce clementines for export to the United States. All trapping and control records kept by the Government of Spain or its designated representative must be made available to APHIS upon request.

(3) *Compliance.* If APHIS determines that an orchard is not operating in compliance with the regulations in this section, it may suspend exports of clementines from that orchard.

(d) *Phytosanitary certificate.* Clementines from Spain must be accompanied by a phytosanitary certificate stating that the fruit meets the conditions of the Government of Spain's Mediterranean fruit fly management program and applicable APHIS regulations.

(e) *Labeling.* Boxes in which clementines are packed must be labeled with a lot number that provides information to identify the orchard where the fruit was grown and the packinghouse where the fruit was packed. The lot number must end with the letters ''US.'' All labeling must be large enough to clearly display the required information and must be located on the outside of the boxes to facilitate inspection.

(f) *Pre-treatment sampling; rates of inspection.* For each consignment of

clementines intended for export to the United States, prior to cold treatment, inspectors will cut and inspect 200 fruit that are randomly selected from throughout the consignment. If inspectors find a single live Mediterranean fruit fly in any stage of development during an inspection, the entire consignment of clementines will be rejected. If a live Mediterranean fruit fly in any stage of development is found in any two lots of fruit from the same orchard during the same shipping season, that orchard will be removed from the export program for the remainder of that shipping season.

(g) *Cold treatment.* Clementines must be cold treated in accordance with part 305 of this chapter. Upon arrival of clementines at a port of entry into the United States, inspectors will examine the cold treatment data for each shipment to ensure that the cold treatment was successfully completed. If the cold treatment has not been successfully completed, the shipment will be held until appropriate remedial actions have been implemented.

(h) *Port of entry sampling.* Clementines imported from Spain are subject to inspection by an inspector at the port of entry into the United States. At the port of first arrival, an inspector will sample and cut clementines from each consignment to detect pest infestation according to sampling rates determined by the Administrator. If a single live Mediterranean fruit fly in any stage of development is found, the consignment will be held until an investigation is completed and appropriate remedial actions have been implemented.

(i) *Suspension of program.* If APHIS determines at any time that the safeguards contained in this section are not protecting against the introduction of Medflies into the United States, APHIS may suspend the importation of clementines and conduct an investigation into the cause of the deficiency.

(j) *Definitions.* The following are definitions for terms used in this section:

Consignment. (1) *Untreated fruit.* For untreated fruit, the term means one or more lots (containing no more than a combined total of 200,000 boxes of clementines) that are presented to an inspector for pre-treatment inspection.

(2) *Treated fruit.* For treated fruit, the term means one or more lots of clementines that are imported into the United States on the same conveyance.

Lot. For the purposes of this section, a number of units of clementines that are from a common origin (i.e., a single producer or a homogenous production unit [8]).

Orchard. A plot on which clementines are grown that is separately registered in the Spanish Medfly management program.

Shipping season. For the purposes of this section, a shipping season is considered to include the period beginning approximately in mid-September and ending approximately in late February of the next calendar year.

§ 319.56–35 Persimmons from the Republic of Korea.

Persimmons (fruit) (*Disopyros khaki*) may be imported into the United States from the Republic of Korea only in accordance with this section and other applicable provisions of this subpart.

(a) The production site, which is an orchard, where the persimmons are grown must have been inspected at least once during the growing season and before harvest for the following pests: *Conogethes punctiferalis, Planococcus kraunhiae, Stathmopoda masinissa,* and *Tenuipalpus zhizhilashiviliae.*

(b) After harvest, the persimmons must be inspected by the Republic of Korea's national plant protection organization (NPPO) and found free of the pests listed in paragraph (a) of this section before the persimmons may be shipped to the United States;

(c) Each consignment of persimmons must be accompanied by a phytosanitary certificate issued by the Republic of Korea's NPPO stating that the fruit is free of *Conogethes punctiferalis, Planococcus kraunhiae, Stathmopoda masinissa,* and *Tenuipalpus zhizhilashiviliae.*

(d) If any of the pests listed in paragraph (a) of this section are detected in an orchard, exports from that orchard will be canceled until the source of infestation is determined and the infestation is eradicated.

§ 319.56–36 Watermelon, squash, cucumber, and oriental melon from the Republic of Korea.

Watermelon (*Citrullus lanatus*), squash (*Curcurbita maxima*), cucumber (*Cucumis sativus*), and oriental melon (*Cucumis melo*) may be imported into the United States from the Republic of Korea only in accordance with this paragraph and all other applicable requirements of this subpart:

(a) The fruit must be grown in pest-proof greenhouses registered with the Republic of Korea's national plant protection organization (NPPO).

(b) The NPPO must inspect and regularly monitor greenhouses for plant pests. The NPPO must inspect greenhouses and plants, including fruit, at intervals of no more than 2 weeks, from the time of fruit set until the end of harvest.

(c) The NPPO must set and maintain McPhail traps (or a similar type with a protein bait that has been approved for the pests of concern) in greenhouses from October 1 to April 30. The number of traps must be set as follows: Two traps for greenhouses smaller than 0.2 hectare in size; three traps for greenhouses 0.2 to 0.5 hectare; four traps for greenhouses over 0.5 hectare and up to 1.0 hectare; and for greenhouses greater than 1 hectare, traps must be placed at a rate of four traps per hectare.

(d) The NPPO must check all traps once every 2 weeks. If a single pumpkin fruit fly is captured, that greenhouse will lose its registration until trapping shows that the infestation has been eradicated.

(e) The fruit may be shipped only from December 1 through April 30.

(f) Each shipment must be accompanied by a phytosanitary certificate issued by NPPO, with the following additional declaration: ''The regulated articles in this shipment were grown in registered greenhouses as specified by 7 CFR 319.56–36.''

(g) Each shipment must be protected from pest infestation from harvest until export. Newly harvested fruit must be covered with insect-proof mesh or a plastic tarpaulin while moving to the packinghouse and awaiting packing. Fruit must be packed within 24 hours of harvesting, in an enclosed container or vehicle or in insect-proof cartons or cartons covered with insect-proof mesh or plastic tarpaulin, and then placed in containers for shipment. These safeguards must be intact when the shipment arrives at the port in the United States.

§ 319.56–37 Grapes from the Republic of Korea.

Grapes (*Vitis* spp.) may be imported into the United States from the Republic of Korea under the following conditions:

(a) The fields where the grapes are grown must be inspected during the growing season by the Republic of Korea's national plant protection organization (NPPO). The NPPO will inspect 250 grapevines per hectare, inspecting leaves, stems, and fruit of the vines.

(b) If evidence of *Conogethes punctiferalis*, *Eupoecilia ambiguella*, *Sparganothis pilleriana*, *Stathmopoda auriferella*, or *Monilinia fructigena* is

[8] A homogeneous production unit is a group of adjacent orchards in Spain that are owned by one or more growers who follow a homogenous production system under the same technical guidance.

detected during inspection, the field will immediately be rejected, and exports from that field will be canceled until visual inspection of the vines shows that the infestation has been eradicated.

(c) Fruit must be bagged from the time the fruit sets until harvest.

(d) Each shipment must be inspected by the NPPO before export. For each shipment, the NPPO must issue a phytosanitary certificate with an additional declaration stating that the fruit in the shipment was found free from *C. punctiferalis*, *E. ambiguella*, *S. pilleriana*, *S. auriferella*, or *M. fructigena*, and *Nippoptilia vitis*.

§ 319.56–38 Clementines, mandarins, and tangerines from Chile.

Clementines (*Citrus reticulata* Blanco var. Clementine), mandarins (*Citrus reticulata* Blanco), and tangerines (*Citrus reticulata* Blanco) may be imported into the United States from Chile only under the following conditions:

(a) The fruit must be accompanied by a permit issued in accordance with § 319.56–3(b).

(b) If the fruit is produced in an area of Chile where Mediterranean fruit fly (*Ceratatis capitata*) is known to occur, the fruit must be cold treated in accordance with part 305 of this chapter. Fruit for which cold treatment is required must be accompanied by documentation indicating that the cold treatment was initiated in Chile (a PPQ Form 203 or its equivalent may be used for this purpose).

(c) The fruit must either be produced and shipped under the systems approach described in paragraph (d) of this section or fumigated in accordance with paragraph (e) of this section.

(d) *Systems approach.* The fruit may be imported without fumigation for *Brevipalpus chilensis* if it meets the following conditions:

(1) *Production site registration.* The production site where the fruit is grown must be registered with the national plant protection organization (NPPO) of Chile. To register, the production site must provide Chile's NPPO with the following information: Production site name, grower, municipality, province, region, area planted to each species, number of plants/hectares/species, and approximate date of harvest. Registration must be renewed annually.

(2) *Low prevalence production site certification.* Between 1 and 30 days prior to harvest, random samples of fruit must be collected from each registered production site under the direction of Chile's NPPO. These samples must undergo a pest detection and evaluation method as follows: The fruit and pedicels must be washed using a flushing method, placed in a 20 mesh sieve on top of a 200 mesh sieve, sprinkled with a liquid soap and water solution, washed with water at high pressure, and washed with water at low pressure. The process must then be repeated. The contents of the sieves must then be placed on a petri dish and analyzed for the presence of live *B. chilensis* mites. If a single live *B. chilensis* mite is found, the production site will not qualify for certification as a low prevalence production site and will be eligible to export fruit to the United States only if the fruit is fumigated in accordance with paragraph (e) of this section. Each production site may have only one opportunity per harvest season to qualify as a low prevalence production site, and certification of low prevalence will be valid for one harvest season only. The NPPO of Chile will present a list of certified production sites to APHIS.

(3) *Post-harvest processing.* After harvest and before packing, the fruit must be washed, rinsed in a chlorine bath, washed with detergent with brushing using bristle rollers, rinsed with a hot water shower with brushing using bristle rollers, predried at room temperature, waxed, and dried with hot air.

(4) *Phytosanitary inspection.* The fruit must be inspected in Chile at an APHIS-approved inspection site under the direction of APHIS inspectors in coordination with the NPPO of Chile after the post-harvest processing. A biometric sample will be drawn and examined from each consignment of fruit, which may represent multiple grower lots from different packing sheds. Clementines, mandarins, or tangerines in any consignment may be shipped to the United States only if the consignment passes inspection as follows:

(i) Fruit presented for inspection must be identified in the shipping documents accompanying each lot of fruit that identify the production site(s) where the fruit was produced and the packing shed(s) where the fruit was processed. This identity must be maintained until the fruit is released for entry into the United States.

(ii) A biometric sample of boxes from each consignment will be selected and the fruit from these boxes will be visually inspected for quarantine pests, and a portion of the fruit will be washed and the collected filtrate will be microscopically examined for *B. chilensis.*

(A) If a single live *B. chilensis* mite is found, the fruit will be eligible for importation into the United States only if it is fumigated in Chile in accordance with paragraph (e) of this section. The production site will be suspended from the low prevalence certification program and all subsequent lots of fruit from the production site of origin will be required to be fumigated as a condition of entry to the United States for the remainder of the shipping season.

(B) If inspectors find evidence of any other quarantine pest, the fruit in the consignment will remain eligible for importation into the United States only if an authorized treatment for the pest is available in the PPQ Treatment Manual and the entire consignment is treated for the pest in Chile under APHIS supervision.

(iii) Each consignment of fruit must be accompanied by a phytosanitary certificate issued by the NPPO of Chile that contains an additional declaration stating that the fruit in the consignment meets the conditions of § 319.56–38(d).

(e) *Approved fumigation.* Clementines, mandarins, or tangerines that do not meet the conditions of paragraph (d) of this section may be imported into the United States if the fruit is fumigated either in Chile or at the port of first arrival in the United States with methyl bromide for *B. chilensis* in accordance with part 305 of this chapter. An APHIS inspector will monitor the fumigation of the fruit and will prescribe such safeguards as may be necessary for unloading, handling, and transportation preparatory to fumigation. The final release of the fruit for entry into the United States will be conditioned upon compliance with prescribed safeguards and required treatment.

(f) *Trust fund agreement.* Clementines, mandarins, and tangerines may be imported into the United States under this section only if the NPPO of Chile has entered into a trust fund agreement with APHIS in accordance with § 319.56–6.

§ 319.56–39 Fragrant pears from China.

Fragrant pears may be imported into the United States from China only under the following conditions:

(a) *Origin, growing, and harvest conditions.* (1) The pears must have been grown in the Korla region of Xinjiang Province in a production site that is registered with the national plant protection organization of China.

(2) All propagative material introduced into a registered production site must be certified free of the pests listed in this section by the national plant protection organization of China.

(3) Within 30 days prior to harvest, the national plant protection

organization of China or officials authorized by the national plant protection organization of China must inspect the registered production site for signs of pest infestation and allow APHIS to monitor the inspections. The national plant protection organization of China must provide APHIS with information on pest detections and pest detection practices, and APHIS must approve the pest detection practices.

(4) If any of the quarantine pests listed in this section are found during the pre-harvest inspection or at any other time, the national plant protection organization of China must notify APHIS immediately.

(i) Upon detection of Oriental fruit fly (*Bactrocera dorsalis*), APHIS may reject the lot or consignment and may prohibit the importation into the United States of fragrant pears from China until an investigation is conducted and APHIS and the national plant protection organization of China agree that appropriate remedial action has been taken.

(ii) Upon detection of peach fruit borer (*Carposina sasaki*), yellow peach moth (*Conogethes punctiferalis*), apple fruit moth (*Cydia inopinata*), Hawthorn spider mite (*Tetranychus viennensis*), red plum maggot (*Cydia funebrana*), brown rot (*Monilinia fructigena*), Asian pear scab (*Venturia nashicola*), pear trellis rust (*Gymnosporangium fuscum*), Asian pear black spot (*Alternaria* spp.), or phylloxeran (*Aphanostigma* sp. poss. *jackusiensis*), APHIS may reject the lot or consignment and may prohibit the importation into the United States of fragrant pears from the production site for the season. The exportation to the United States of fragrant pears from the production site may resume in the next growing season if an investigation is conducted and APHIS and the national plant protection organization of China agree that appropriate remedial action has been taken. If any of these pests is detected in more than one registered production site, APHIS may prohibit the importation into the United States of fragrant pears from China until an investigation is conducted and APHIS and the national plant protection organization of China agree that appropriate remedial action has been taken.

(5) After harvest, the national plant protection organization of China or officials authorized by the national plant protection organization of China must inspect the pears for signs of pest infestation and allow APHIS to monitor the inspections.

(6) Upon detection of large pear borer (*Numonia pivivorella*), pear curculio (*Rhynchites fovepessin*), or Japanese apple curculio (*R. heros*), APHIS may reject the lot or consignment.

(b) Packing requirements. (1) The fragrant pears must be packed in cartons that are labeled in accordance with § 319.56–5(e).

(2) The fragrant pears must be held in a cold storage facility while awaiting export. If fruit from unregistered production sites are stored in the same facility, the fragrant pears must be isolated from that other fruit.

(c) Shipping requirements. (1) The fragrant pears must be shipped in insect-proof containers and all pears must be safeguarded during transport to the United States in a manner that will prevent pest infestation.

(2) The fragrant pears may be imported only under a permit issued by APHIS in accordance with § 319.56–3(b).

(3) Each shipment of pears must be accompanied by a phytosanitary certificate issued by the national plant protection organization of China stating that the conditions of this section have been met and that the shipment has been inspected and found free of the pests listed in this section.

§ 319.56–40 Peppers from certain Central American countries.

Fresh peppers (*Capsicum* spp.) may be imported into the United States from Costa Rica, El Salvador, Guatemala, Honduras, and Nicaragua only under the following conditions:

(a) For peppers of the species *Capsicum annuum*, *Capsicum frutescens*, *Capsicum baccatum*, and *Capsicum chinense* from areas free of Mediterranean fruit fly (Medfly), terms of entry are as follows:

(1) The peppers must be grown and packed in an area that has been determined by APHIS to be free of Mediterranean fruit fly (Medfly) in accordance with the procedures described in § 319.56–5 of this subpart.

(2) A pre-harvest inspection of the growing site must be conducted by the national plant protection organization (NPPO) of the exporting country for the weevil *Faustinus ovatipennis*, pea leafminer, tomato fruit borer, banana moth, lantana mealybug, passionvine mealybug, melon thrips, the rust fungus *Puccinia pampeana*, Andean potato mottle virus, and tomato yellow mosaic virus, and if these pests are found to be generally infesting the growing site, the NPPO may not allow export from that production site until the NPPO has determined that risk mitigation has been achieved.

(3) The peppers must be packed in insect-proof cartons or containers or covered with insect-proof mesh or plastic tarpaulin at the packinghouse for transit to the United States. These safeguards must remain intact until arrival in the United States.

(4) The exporting country's NPPO is responsible for export certification, inspection, and issuance of phytosanitary certificates. Each shipment of peppers must be accompanied by a phytosanitary certificate issued by the NPPO and bearing the declaration, ''These peppers were grown in an area recognized to be free of Medfly and the shipment has been inspected and found free of the pests listed in the requirements.''

(b) For peppers of the species *Capsicum annuum*, *Capsicum frutescens*, *Capsicum baccatum*, *Capsicum chinense*, and *Capsicum pubescens* from areas in which Medfly is considered to exist:

(1) The peppers must be grown in approved production sites registered with the NPPO of the exporting country. Initial approval of the production sites will be completed jointly by the exporting country's NPPO and APHIS. The exporting country's NPPO will visit and inspect the production sites monthly, starting 2 months before harvest and continuing through until the end of the shipping season. APHIS may monitor the production sites at any time during this period.

(2) Pepper production sites must consist of pest-exclusionary greenhouses, which must have self-closing double doors and have all other openings and vents covered with 1.6 (or less) mm screening.

(3) Registered sites must contain traps for the detection of Medfly both within and around the production site.

(i) Traps with an approved protein bait must be placed inside the greenhouses at a density of four traps per hectare, with a minimum of two traps per greenhouse. Traps must be serviced on a weekly basis.

(ii) If a single Medfly is detected inside a registered production site or in a consignment, the registered production site will lose its ability to export peppers to the United States until APHIS and the exporting country's NPPO mutually determine that risk mitigation is achieved.

(iii) Medfly traps with an approved lure must be placed inside a buffer area 500 meters wide around the registered production site, at a density of 1 trap per 10 hectares and a minimum of 10 traps. These traps must be checked at least every 7 days. At least one of these traps must be near the greenhouse. Traps must be set for at least 2 months before export and trapping must continue to the end of the harvest.

(iv) Capture of 0.7 or more Medflies per trap per week will delay or suspend the harvest, depending on whether harvest has begun, for consignments of peppers from that production site until APHIS and the exporting country's NPPO can agree that the pest risk has been mitigated.

(v) The greenhouse must be inspected prior to harvest for the weevil *Faustinus ovatipennis,* pea leafminer, tomato fruit borer, banana moth, lantana mealybug, passionvine mealybug, melon thrips, the rust fungus *Puccinia pampeana,* Andean potato mottle virus, and tomato yellow mosaic virus. If any of these pests, or other quarantine pests, are found to be generally infesting the greenhouse, export from that production site will be halted until the exporting country's NPPO determines that the pest risk has been mitigated.

(4) The exporting country's NPPO must maintain records of trap placement, checking of traps, and any Medfly captures. The exporting country's NPPO must maintain an APHIS-approved quality control program to monitor or audit the trapping program. The trapping records must be maintained for APHIS' review.

(5) The peppers must be packed within 24 hours of harvest in a pest-exclusionary packinghouse. The peppers must be safeguarded by an insect-proof mesh screen or plastic tarpaulin while in transit to the packinghouse and while awaiting packing. Peppers must be packed in insect-proof cartons or containers, or covered with insect-proof mesh or plastic tarpaulin, for transit to the United States. These safeguards must remain intact until arrival in the United States or the consignment will be denied entry into the United States.

(6) During the time the packinghouse is in use for exporting peppers to the United States, the packinghouse may accept peppers only from registered approved production sites.

(7) The exporting country's NPPO is responsible for export certification, inspection, and issuance of phytosanitary certificates. Each shipment of peppers must be accompanied by a phytosanitary certificate issued by the NPPO and bearing the declaration, ''These peppers were grown in an approved production site and the shipment has been inspected and found free of the pests listed in the requirements.'' The shipping box must be labeled with the identity of the production site.

(c) For peppers of the species *Capsicum pubescens* from areas in which Mexican fruit fly (Mexfly) is considered to exist:

(1) The peppers must be grown in approved production sites registered with the NPPO of the exporting country. Initial approval of the production sites will be completed jointly by the exporting country's NPPO and APHIS. The exporting country's NPPO must visit and inspect the production sites monthly, starting 2 months before harvest and continuing through until the end of the shipping season. APHIS may monitor the production sites at any time during this period.

(2) Pepper production sites must consist of pest-exclusionary greenhouses, which must have self-closing double doors and have all other openings and vents covered with 1.6 (or less) mm screening.

(3) Registered sites must contain traps for the detection of Mexfly both within and around the production site.

(i) Traps with an approved protein bait must be placed inside the greenhouses at a density of four traps per hectare, with a minimum of two traps per greenhouse. Traps must be serviced on a weekly basis.

(ii) If a single Mexfly is detected inside a registered production site or in a consignment, the registered production site will lose its ability to ship under the systems approach until APHIS and the exporting country's NPPO mutually determine that risk mitigation is achieved.

(iii) Mexfly traps with an approved protein bait must be placed inside a buffer area 500 meters wide around the registered production site, at a density of 1 trap per 10 hectares and a minimum of 10 traps. These traps must be checked at least every 7 days. At least one of these traps must be near the greenhouse. Traps must be set for at least 2 months before export, and trapping must continue to the end of the harvest.

(iv) Capture of 0.7 or more Mexflies per trap per week will delay or suspend the harvest, depending on whether harvest has begun, for consignments of peppers from that production site until APHIS and the exporting country's NPPO can agree that the pest risk has been mitigated.

(v) The greenhouse must be inspected prior to harvest for the weevil *Faustinus ovatipennis,* pea leafminer, tomato fruit borer, banana moth, lantana mealybug, passionvine mealybug, melon thrips, the rust fungus *Puccinia pampeana,* Andean potato mottle virus, and tomato yellow mosaic virus. If any of these pests, or other quarantine pests, are found to be generally infesting the greenhouse, export from that production site will be halted until the exporting country's NPPO determines that the pest risk has been mitigated.

(4) The exporting country's NPPO must maintain records of trap placement, checking of traps, and any Mexfly captures. The exporting country's NPPO must maintain an APHIS-approved quality control program to monitor or audit the trapping program. The trapping records must be maintained for APHIS's review.

(5) The peppers must be packed within 24 hours of harvest in a pest-exclusionary packinghouse. The peppers must be safeguarded by an insect-proof mesh screen or plastic tarpaulin while in transit to the packinghouse and while awaiting packing. Peppers must be packed in insect-proof cartons or containers, or covered with insect-proof mesh or plastic tarpaulin, for transit to the United States. These safeguards must remain intact until arrival in the United States or the consignment will be denied entry into the United States.

(6) During the time the packinghouse is in use for exporting peppers to the United States, the packinghouse may accept peppers only from registered approved production sites.

(7) The exporting country's NPPO is responsible for export certification, inspection, and issuance of phytosanitary certificates. Each shipment of peppers must be accompanied by a phytosanitary certificate issued by the NPPO and bearing the declaration, ''These peppers were grown in an approved production site and the shipment has been inspected and found free of the pests listed in the requirements.'' The shipping box must be labeled with the identity of the production site.

§ 319.75–2 [Amended]

13. In § 319.75–2, footnote 1 would be amended by removing the citation ''7 CFR 319.56 *et seq.*'' and adding the words ''Subpart—Fruits and Vegetables of this part'' in its place.

PART 352—PLANT QUARANTINE SAFEGUARD REGULATIONS

14. The authority citation for part 352 would continue to read as follows:

Authority: 7 U.S.C. 7701–7772 and 7781–7786; 21 U.S.C. 136 and 136a; 31 U.S.C. 9701; 7 CFR 2.22, 2.80, and 371.3.

15. In § 352.30, paragraphs (e) and (f) would be revised to read as follows:

§ 352.30 Administrative instructions: Certain oranges, tangerines, and grapefruit from Mexico.

* * * * *

(e) *Untreated fruit from certain municipalities in Sonora, Mexico.* Oranges, tangerines, and grapefruit in

transit to foreign countries may be imported from certain municipalities in Sonora, Mexico, that meet the criteria of § 319.56–5 for freedom from fruit flies in accordance with the applicable conditions in part 319 of this chapter.

(f) *Treated fruit.* Oranges, tangerines, and grapefruit from Mexico that have been treated in Mexico in accordance with part 305 of this chapter may be moved through the United States ports for exportation in accordance with the regulations in part 319 of this chapter.

* * * * *

Done in Washington, DC, this 19th day of April 2006.

Charles D. Lambert,

Acting Under Secretary for Marketing and Regulatory Programs.

[FR Doc. 06–3897 Filed 4–26–06; 8:45 am]

BILLING CODE 3410–34–C

Reader Aids

Federal Register

Vol. 71, No. 81

Thursday, April 27, 2006

CUSTOMER SERVICE AND INFORMATION

Federal Register/Code of Federal Regulations	
General Information, indexes and other finding aids	**202–741–6000**
Laws	**741–6000**
Presidential Documents	
Executive orders and proclamations	**741–6000**
The United States Government Manual	**741–6000**
Other Services	
Electronic and on-line services (voice)	**741–6020**
Privacy Act Compilation	**741–6064**
Public Laws Update Service (numbers, dates, etc.)	**741–6043**
TTY for the deaf-and-hard-of-hearing	**741–6086**

ELECTRONIC RESEARCH

World Wide Web

Full text of the daily Federal Register, CFR and other publications is located at: **http://www.gpoaccess.gov/nara/index.html**

Federal Register information and research tools, including Public Inspection List, indexes, and links to GPO Access are located at: **http://www.archives. gov/federal__register/**

E-mail

FEDREGTOC-L (Federal Register Table of Contents LISTSERV) is an open e-mail service that provides subscribers with a digital form of the Federal Register Table of Contents. The digital form of the Federal Register Table of Contents includes HTML and PDF links to the full text of each document.

To join or leave, go to **http://listserv.access.gpo.gov** and select *Online mailing list archives, FEDREGTOC-L, Join or leave the list (or change settings);* then follow the instructions.

PENS (Public Law Electronic Notification Service) is an e-mail service that notifies subscribers of recently enacted laws.

To subscribe, go to **http://listserv.gsa.gov/archives/publaws-l.html** and select *Join or leave the list (or change settings);* then follow the instructions.

FEDREGTOC-L and **PENS** are mailing lists only. We cannot respond to specific inquiries.

Reference questions. Send questions and comments about the Federal Register system to: **fedreg.info@nara.gov**

The Federal Register staff cannot interpret specific documents or regulations.

FEDERAL REGISTER PAGES AND DATE, APRIL

16477–16690 3
16691–16972 4
16973–17334 5
17335–17690 6
17691–17966 7
17967–18160 10
18161–18588 11
18589–19096 12
19097–19426 13
19427–19620 14
19621–19804 17
19805–19982 18
19983–20334 19
20335–20516 20
20517–20862 21
20863–23854 24
23855–24550 25
24551–24802 26
24803–25058 27

CFR PARTS AFFECTED DURING APRIL

At the end of each month, the Office of the Federal Register publishes separately a List of CFR Sections Affected (LSA), which lists parts and sections affected by documents published since the revision date of each title.

3 CFR

Proclamations:
7992 16685
7993 16687
7994 16689
7995 16969
7996 16971
7997 18157
7998 18159
7999 18585
8000 18587
8001 19983
8002 20517
8003 20863
8004 20865
8005 24547
8006 24549

Executive Orders:
13398 20519

Administrative Orders;
Memorandums:
Memorandum of May 9, 2002 (Superseded by Memorandum of April 17, 2006) 20333
Memorandum of April 6, 2006 19427
Memorandum of April 17, 2006 20333

5 CFR

213 18161
1216 17967

Proposed Rules:
875 19459

6 CFR

5 20523

Proposed Rules:
5 16519

7 CFR

56 20288
319 19097
330 16973
905 16976
916 17970
917 17970
922 16979
923 17979
930 16982
982 18164
985 16986
1033 20335
1412 17982
1437 19805
1430 19621

Proposed Rules:
28 20350
58 20351
205 .....19131, 24820
301 16711
305 25010
319 25010
330 20030
352 25010
868 18231
984 20902
1290 20353
1496 17767

8 CFR

204 19805

Proposed Rules:
103 20357
299 20357

9 CFR

77 24803
93 24806
381 20867

Proposed Rules:
93 19134
94 20030
317 20041
381 20041
390 17384
442 20041

10 CFR

72 19806
110 .....19102, 20336
300 20784
431 24972

Proposed Rules:
72 19831
110 19135
431 23876
626 20909

11 CFR

100 18589
110 18589
114 18589

12 CFR

201 16991
303 20524
308 20524
312 20524
336 20524
347 20524
348 20524
357 20524
362 20524
363 20524
364 20524
366 20524
367 20524
528 19810
546 19810
552 19810
561 19810
563 19810

563b....19810
563e....18614
570....19810
574....19810
575....19810
583....19810
611....18168
612....18168
614....18168
615....18168
618....18168
619....18168
620....18168
630....18168
Ch. VII....24551
Ch. XVII....19985
707....24568
Proposed Rules:
652....24613
655....24613
915....19832

13 CFR

121....19812

14 CFR

23....17335
25....18169, 18183, 18192, 24808
39....16477, 16691, 16992, 16994, 17691, 17694, 17696, 17698, 17700, 17983, 18194, 18197, 18199, 18201, 18205, 18207, 18210, 18618, 19104, 19107, 19108, 19110, 19114, 19624, 19627, 19628, 19788, 19986, 19994, 19998, 20001, 20528, 20530, 20531, 24571, 24573, 24576, 24808
71....16994, 16995, 16997, 16998, 18213, 19117, 19633, 19634, 19813, 19814, 20871, 20872, 20873, 20874, 20875, 20876, 24812
97....16999, 17342, 19635, 19636
121....17000
Proposed Rules:
23....20368
25....18236, 19928, 20574
39....16716, 16721, 16725, 17033, 17035, 17037, 18237, 18239, 18242, 18244, 18247, 18249, 18251, 18253, 18686, 19136, 19138, 19140, 19142, 19144, 19661, 19662, 19663, 19835, 20042, 20593, 20595, 20597, 20599, 20915, 20919, 24613
71....17039, 17385, 17386, 17387, 17388, 17389, 18254, 19148, 20374
121....16678, 18255, 19928, 20574
129....19928, 20574
382....19838

15 CFR

710....24918
711....24918
712....24918
713....24918
714....24918
715....24918
716....24918
717....24918
718....24918
719....24918
720....24918
721....24918
722....24918
730....20876
732....20876
734....20876
738....20876
740....20876
742....20876
743....20876
746....20876
748....20876
750....20876
752....20876
762....20876
770....20876
772....20876
774....20876
902....17985
960....24474
Proposed Rules:
700....19666

16 CFR

Proposed Rules:
305....18023
437....19054
1214....18030

17 CFR

202....20340
279....17344
Proposed Rules:
41....18030
240....18030

18 CFR

39....19814
342....18411
Proposed Rules:
1310....19460

19 CFR

101....20005
122....20005
Proposed Rules:
24....20922
111....20922

20 CFR

404....24812
405....17990

21 CFR

510....17701
520....17701, 19429
524....16481
558....17702, 20533, 24814
610....20533
Proposed Rules:
201....18039
211....18039
878....17390

22 CFR

34....16481
62....16696
120....20534
121....20534
122....20534
123....20534
124....20534
125....20534
126....20534
127....20534
128....20534
129....20534
130....20534
Proposed Rules:
62....17768

23 CFR

1313....20555
1327....19823
Proposed Rules:
634....20925
635....19667
655....23877
773....17040

24 CFR

207....18152
3280....19638

25 CFR

517....20006

26 CFR

1....17990, 18623, 19117, 23855, 23856, 24516
602....17990, 24516
Proposed Rules:
1....18053, 19669, 20044, 20376, 23882, 24543

27 CFR

1....16918
4....16918
5....16918
6....16918
7....16918
8....16918
9....16918
10....16918
11....16918
12....16918
13....16918
16....16918
17....16918
18....16918
19....16918
20....16918
21....16918
22....16918
24....16918
25....16918
26....16918
27....16918
28....16918
29....16918
30....16918
31....16918
40....16918
44....16918
45....16918
46....16918
53....16918
70....16918
71....16918

28 CFR

0....19826
Proposed Rules:
540....16520

29 CFR

11....16664
500....16664
501....16664
516....16664
519....16664
531....16664
536....16664
547....16664
548....16664
549....16664
550....16664
552....16664
570....16664
1910....16669
1913....16669
1915....16669
1926....16669
2520....20820
2550....20820
2578....20820
4022....19429
4044....19429

30 CFR

28....16664
48....16664
50....16664
56....16664
57....16664
70....16664
71....16664
72....16664
75....16664
77....16664
90....16664
250....16859, 19640, 23858
Proposed Rules:
205....17774
942....17682
943....20602
950....20604

31 CFR

500....17345

32 CFR

64....19827
578....17276
706....17346, 17347
2004....18007
Proposed Rules:
505....24494

33 CFR

100....16488, 17703, 18213, 19431, 19646, 20011
117....16489, 16491, 16492, 17348, 17350, 18623, 19119, 20573, 23864
147....19431
165....19119, 19121, 19431, 19648, 19650, 20011, 20013, 24578, 24580
Proposed Rules:
100....16525, 18055, 19670, 19672, 23883
117....16527, 16529, 17394, 17397, 19150, 20376
165....16531, 18256, 19152, 19460, 19462, 19465

34 CFR

Proposed Rules:
76....24824

36 CFR

251....16614, 16622

Proposed Rules:
Ch. I 16534
7 17777
1193 19839
1194 19839

37 CFR

Proposed Rules:
1 17399
201 24829

38 CFR

20 18008
21 24582

39 CFR

Proposed Rules:
111 19840
3001 20930

40 CFR

9 24817
18 16699
51 ....17003, 17705
52 ....18216, 18219, 18624, 18626, 19124, 19432
63 ....17352, 17712, 17720, 17729, 17738, 19126, 19435, 19652, 20446, 20895
65 20446
80 16492
81 17750
82 18219
86 24817
93 17003
174 24582
180 ....17009, 17014, 18628, 18635, 18642, 19436, 19441, 24582, 24586, 24590
194 18010
260 16862
261 16862
264 16862
265 16862
266 16862
268 16862
270 16862
271 ....16862, 19442, 23864
272 20341
300 20016
600 24817
761 16703
799 18650

Proposed Rules:
18 16728
50 16534
51 ....16534, 17047
52 ....17050, 18258, 18689, 19155, 19467, 24831, 24834
60 17401
63 ....19155, 19674, 20931
80 16535
82 ....18259, 18262
93 17047
180 ....18689, 20045, 20048, 24615
260 19842
261 19842
262 19842
263 19842
264 19842
265 19842
271 ....19470, 19471, 19842, 23885
278 16729
300 ....20052, 24627
721 18055
745 17409

41 CFR

102–37 23867
102–39 20900
301–12 24596
301–13 24596
301–51 24597
301–70 24596
301–74 24597

42 CFR

410 17021
412 18654
413 18654
420 20754
424 20754
489 20754
498 20754

Proposed Rules:
405 17052
409 23996
410 23996
412 ....17052, 23996
413 23996
422 17052
424 23996
485 23996
489 ....17052, 23996

43 CFR

5 19127
10 16500
423 19790
429 19790

Proposed Rules:
2800 24836
2880 24836

44 CFR

64 ....16704, 16708, 19658

Proposed Rules:
67 16749

46 CFR

401 16501

47 CFR

63 18667
64 18667
73 ....17030, 17031, 17032, 24598, 24599, 24600

Proposed Rules:
1 17410
64 24634
73 ....18693, 18694, 20059, 20060, 24635
90 17786

48 CFR

Ch. 1 ....20294, 20309
2 ....20295, 20298, 20299
5 ....20295, 20299
7 ....20295, 20299
12 20301
14 20299
19 ....20303, 20304, 20309
22 20301
25 ....20305, 20306
37 20299
52 ....20299, 20301, 20303, 20304, 20305, 20306, 20308
212 18667
222 18669
225 18671
229 18671
232 18671
252 18671
950 19829

Proposed Rules:
225 ....18694, 18695
252 ....18695, 20061

49 CFR

171 23869
172 23869
173 23869
234 19129
523 ....17566, 19449
533 ....17566, 19449
537 ....17566, 19449
541 20022
571 ....17752, 18673, 20026

Proposed Rules:
544 16541
571 20932
594 20061
604 18056

50 CFR

17 ....19244, 19452, 19954, 24916
223 ....17757, 19241, 24776
229 ....17358, 17360, 24776
648 ....19348, 20900, 23871
660 ....17985, 18227, 24601
665 17985
679 ....17362, 18021, 18230, 18684, 19129, 19829, 20346, 23874

Proposed Rules:
10 20168
13 20168
17 ....18456, 19157, 19158, 20168, 20607, 20625, 20636, 20637, 23886, 24916
20 18562
23 20168
91 18697
216 17790
222 19675
223 ....19675, 20941
229 20941
622 ....17062, 24635
680 ....20378, 20966

REMINDERS

The items in this list were editorially compiled as an aid to Federal Register users. Inclusion or exclusion from this list has no legal significance.

RULES GOING INTO EFFECT APRIL 27, 2006

COMMERCE DEPARTMENT

Industry and Security Bureau

Chemical Weapons Convention regulations; published 4-27-06

ENVIRONMENTAL PROTECTION AGENCY

OMB approvals; technical amendment; published 4-27-06

HEALTH AND HUMAN SERVICES DEPARTMENT

Food and Drug Administration

Animal drugs, feeds, and related products:

Lasalocid and Chlortetracycline; published 4-27-06

SOCIAL SECURITY ADMINISTRATION

Social security benefits:

Federal old age, survivors, and disability insurance—

Widow's and widower's benefits; requirements and applications filing; published 4-27-06

TRANSPORTATION DEPARTMENT

Navigation of foreign civil aircraft within United States; policy determination request; published 3-28-06

TRANSPORTATION DEPARTMENT

Federal Aviation Administration

Airworthiness directives:

Lycoming Engines; published 3-23-06

MD Helicopters, Inc.; published 4-27-06

Turbomeca S.A.; published 3-23-06

COMMENTS DUE NEXT WEEK

AGRICULTURE DEPARTMENT

Agricultural Marketing Service

Cotton classing, testing, and standards:

Classification services to growers; 2006 user fees; comments due by 5-5-06; published 4-20-06 [FR E6-05940]

National Dairy Promotion and Research Program:

Regulatory Flexibility Act; Section 610 review; comments due by 5-1-06; published 2-28-06 [FR 06-01854]

AGRICULTURE DEPARTMENT

Commodity Credit Corporation

Export programs:

Commodities procurement for foreign donation; Open for comments until further notice; published 12-16-05 [FR E5-07460]

AGRICULTURE DEPARTMENT

Food and Nutrition Service

Child nutrition programs:

School Breakfast Program—

Severe need assistance; comments due by 5-1-06; published 11-2-05 [FR 05-21785]

AGRICULTURE DEPARTMENT

Rural Housing Service

Direct single family housing loans and grants; comments due by 5-5-06; published 3-6-06 [FR 06-02072]

COMMERCE DEPARTMENT

Economic Analysis Bureau

International services surveys:

BE-577; direct investment abroad; transactions of U.S. reporter with foreign affiliate; quarterly survey; comments due by 5-1-06; published 3-1-06 [FR 06-01877]

COMMERCE DEPARTMENT

National Oceanic and Atmospheric Administration

Endangered and threatened species:

Sea turtle conservation—

Fishing activities modification; comments due by 5-2-06; published 4-17-06 [FR E6-05686]

Fishery conservation and management:

Alaska; fisheries of Exclusive Economic Zone—

Bering Sea and Aleutian Islands king and tanner crabs; comments due by 5-5-06; published 3-21-06 [FR 06-02705]

Caribbean, Gulf, and South Atlantic fisheries—

Gulf red grouper; comments due by 5-1-06; published 3-31-06 [FR E6-04748]

Northeastern United States fisheries—

Northeast multispecies; comments due by 5-1-06; published 3-30-06 [FR E6-04665]

COMMERCE DEPARTMENT

Patent and Trademark Office

Patent cases:

Continuing applications, continued examination practice requests, and applications containing patentably indistinct claims; comments due by 5-3-06; published 1-3-06 [FR 05-24528]

Patent applications; claims examination; comments due by 5-3-06; published 1-3-06 [FR 05-24529]

Practice and procedure:

Trademark Trial and Appeal Board rules; miscellaneous changes; comments due by 5-4-06; published 3-27-06 [FR 06-02875]

ENVIRONMENTAL PROTECTION AGENCY

Air pollution control; new motor vehicles and engines:

Tier 2 motor vehicles; light-duty diesel emissions; comments due by 5-1-06; published 3-30-06 [FR 06-02979]

Air programs:

Ambient air quality standards, national—

General conformity; PM2.5 de minimis emission levels; comments due by 5-5-06; published 4-5-06 [FR 06-03310]

General conformity; PM2.5 de minimis emission levels; comments due by 5-5-06; published 4-5-06 [FR 06-03311]

Fuel and fuel additives—-

Gasoline and diesel fuel test methods; comments due by 5-3-06; published 4-3-06 [FR 06-03133]

Fuels and fuel additives—

Gasoline and diesel fuel test methods; comments due by 5-3-06; published 4-3-06 [FR 06-03132]

Air quality implementation plans:

Preparation, adoption, submittal—

Air emissions reporting requirements; comments due by 5-3-06; published 1-3-06 [FR 05-24614]

Air quality implementation plans; approval and promulgation; various States:

Iowa; comments due by 5-1-06; published 3-30-06 [FR 06-03032]

Maryland; comments due by 5-1-06; published 3-31-06 [FR 06-03107]

Virginia; comments due by 5-5-06; published 4-5-06 [FR E6-04940]

Research and development:

Environmental protection research fellowships and special research consultants for environmental protection; establishment; comments due by 5-4-06; published 4-4-06 [FR 06-03204]

Solid waste:

Granular mine tailings in asphalt concrete and Portland cement concrete in transportation construction projects; management criteria; comments due by 5-4-06; published 4-4-06 [FR 06-03104]

HEALTH AND HUMAN SERVICES DEPARTMENT

Food and Drug Administration

Color additives:

Cochineal extract and carmine; declaration requirements; comments due by 5-1-06; published 1-30-06 [FR E6-01104]

Human drugs:

Prescription drug marketing; blood derivatives distribution by registered blood establishments qualifying as health care entities; comments due by 5-2-06; published 2-1-06 [FR E6-01225]

HOMELAND SECURITY DEPARTMENT

Coast Guard

Regattas and marine parades:

2006 Rappahannock River Boaters Association Spring and Fall Radar Shootout; comments due by 5-3-06; published 4-3-06 [FR E6-04788]

Correction; comments due by 5-3-06; published 4-10-06 [FR E6-05208]

INTERIOR DEPARTMENT

Fish and Wildlife Service

Endangered and threatened species:

Critical habitat designations—

Canada lynx; contiguous United States distinct population segment; comments due by 4-30-06; published 2-16-06 [FR 06-01443]

INTERIOR DEPARTMENT

National Park Service

National Park System:

Glacier Bay National Park, AK; vessel management; comments due by 5-2-06; published 3-3-06 [FR 06-02000]

PERSONNEL MANAGEMENT OFFICE

Notification and Federal Employee Antidiscrimination and Retaliation Act of 2002; Title II implementation:

Reporting and best practices; comments due by 5-1-06; published 1-25-06 [FR E6-00933]

Notification and Federal Employee Antidiscrimination and Retaliation Act of 2002; implementation:

Title II reporting and best practices requirements; comments due by 5-1-06; published 3-31-06 [FR 06-03166]

POSTAL RATE COMMISSION

Practice and procedure:

Express Mail Second Day Service; classification change; comments due by 5-3-06; published 4-24-06 [FR E6-06104]

SOCIAL SECURITY ADMINISTRATION

Medicare subsidies:

Medicare Part B income-related monthly adjustment amount; comments due by 5-2-06; published 3-3-06 [FR 06-02075]

Social security benefits and supplemental security income:

Federal old age, survivors, and disability insurance, and aged, blind, and disabled—

Optometrists acceptability as medical sources for establishing medically determinable impairments; comments due by 5-1-06; published 3-1-06 [FR E6-02852]

TRANSPORTATION DEPARTMENT

Federal Aviation Administration

Airworthiness directives:

Airbus; comments due by 5-4-06; published 4-4-06 [FR E6-04825]

BAE Systems (Operations) Ltd.; comments due by 5-1-06; published 4-5-06 [FR E6-04927]

Boeing; comments due by 5-1-06; published 4-4-06 [FR E6-04827]

Eurocopter France; comments due by 5-1-06; published 2-28-06 [FR E6-02759]

Mitsubishi Heavy Industries; comments due by 5-2-06; published 3-22-06 [FR E6-04123]

Rolls-Royce plc; comments due by 5-1-06; published 3-1-06 [FR 06-01827]

Sicma Areo Seat; comments due by 5-1-06; published 3-1-06 [FR E6-02849]

Airworthiness standards:

Aircraft electrical and electronic systems; high-intensity radiated fields protection; comments due by 5-2-06; published 2-1-06 [FR 06-00895]

Aircraft engine standards for engine life-limited parts; comments due by 5-3-06; published 2-2-06 [FR 06-00950]

VOR Federal airways; comments due by 5-1-06; published 3-17-06 [FR E6-03852]

LIST OF PUBLIC LAWS

This is a continuing list of public bills from the current session of Congress which have become Federal laws. It may be used in conjunction with "P L U S" (Public Laws Update Service) on 202–741–6043. This list is also available online at *http://www.archives.gov/federal-register/laws.html*.

The text of laws is not published in the **Federal Register** but may be ordered in "slip law" (individual pamphlet) form from the Superintendent of Documents, U.S. Government Printing Office, Washington, DC 20402 (phone, 202–512–1808). The text will also be made available on the Internet from GPO Access at *http://www.gpoaccess.gov/plaws/index.html*. Some laws may not yet be available.

H.R. 4979/P.L. 109–218

Local Community Recovery Act of 2006 (Apr. 20, 2006; 120 Stat. 333)

Last List April 17, 2006

Public Laws Electronic Notification Service (PENS)

PENS is a free electronic mail notification service of newly enacted public laws. To subscribe, go to *http://listserv.gsa.gov/archives/publaws-l.html*

Note: This service is strictly for E-mail notification of new laws. The text of laws is not available through this service. **PENS** cannot respond to specific inquiries sent to this address.